92-2406-01 Rev. B

I CLASS™

HF and UHF RFID Modules

Installation and Operating Instructions

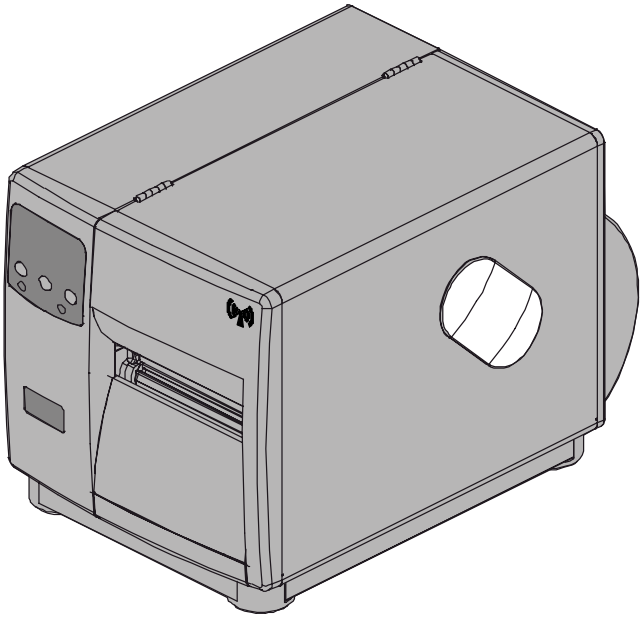

Corporate Headquarters
4501 Parkway Commerce Blvd.
Orlando, Fl 32808
Phone: 407-578-8007
Fax: 407-578-8377

www.datamaxcorp.com

Asia-Pacific
19 Loyang Way
#01-01 Changi Logistics Centre
Singapore 508724
Phone: +65 542-2611
Fax: +65 542-3611

Datamax International
Herbert House
12 Elizabeth Way, Pinnacles
Harlow, Essex CM19 5FE UK
Phone: +44 1279 772200
Fax: +44 1279 424448

DATAMAX®

Printed U.S.A. © Copyright 2005

Note: This equipment has been tested and found to comply with the limits for a Class A digital device, pursuant to part15 of the FCC Rules. These limits are designed to provide reasonable protection against harmful interference when the equipment is operated in a commercial environment. This equipment generates, uses, and can radiate radio frequency energy and, if not installed and used in accordance with the instruction manual, may cause harmful interference to radio communications. Operation of this equipment in a residential area is likely to cause harmful interference in which case the user will be required to correct the interference at his own expense.

CAUTION: This device complies with FCC Radio Frequency exposure limits for an uncontrolled environment. This equipment should be installed and operated with a minimum distance of 20cm between the radiator and your body. If 20cm distance cannot be maintained, end users are to be 20cm from printer extremity.

CAUTION: Any changes or modifications to this RFID module not expressly approved by Datamax Corporation will void the user's authority to operate the equipment.

CAUTION: Operation is subject to the following two conditions: (1) this device may not cause interference, and (2) this device must accept any interference, including interference that may cause undesired operation of this device.

Firmware Required

This option requires Application Version '8.04' or greater to operate.

Preparing the Printer

Start this installation by ensuring that the printer has the correct Application Version as follows:

1. With the printer powered 'On' and loaded with media, press the **TEST** Key.

   ☑ ***Note:*** *To capture all of the printed information, use 2-inch (51 mm) or wider media, with a Label Width setting that is matched to the label's width. See the Operator's Manual for details.*

2. Using the FWD Key, scroll to `Print Configuration`.

3. Press the **TEST** Key.

4. Examine the Application Version printed on the label. Compare that number with the example, shown right. Ensure that the Application Version is at a level of 08.03, or greater.

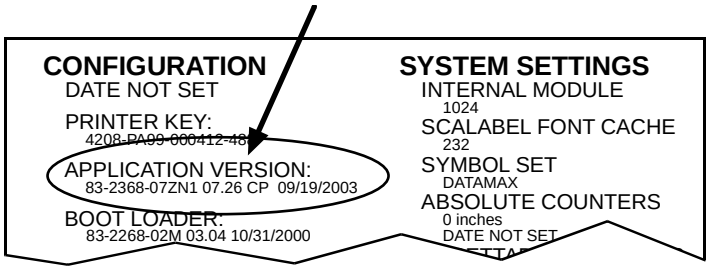

5. If necessary, update the Application Version by downloading the firmware file for your model printer from **ftp://ftp.datamaxcorp.com/anonymous/temp/rfid/** then follow the "Updating Printer Firmware" procedure found in the *Operator's Manual*.

Installing the Option

Follow the steps below if installing the RFID module. If the RFID module is already installed proceed to the next section.

1. Turn off the power switch and unplug the printer.

2. Open the cover and remove the three Screws that secure the Front Cover Panel to the printer.

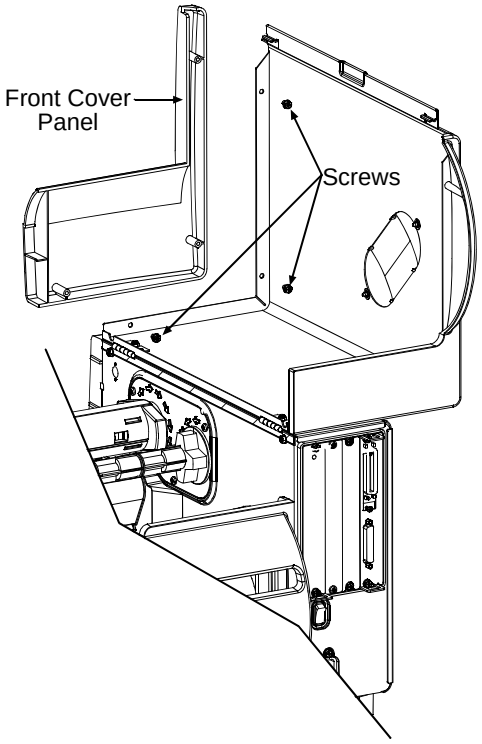

3. Position the RFID Front Cover Panel on the printer and re-install two of the previously removed screws, as shown.

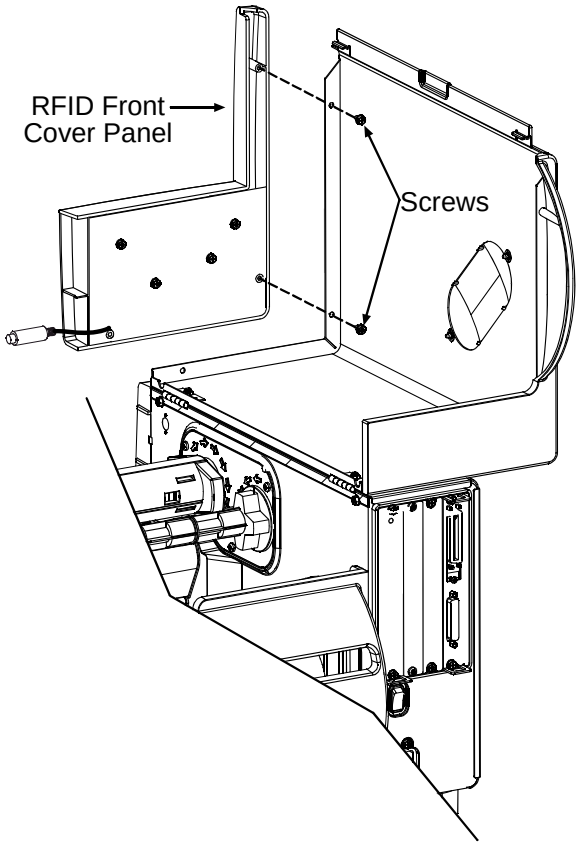

4. Route the RFID Cable as shown.

5. Connect the RFID Cable to the connector in the printer's Centerplate.

This completes the installation. Load Smart labels and ribbon (if necessary) then close the printer's cover.

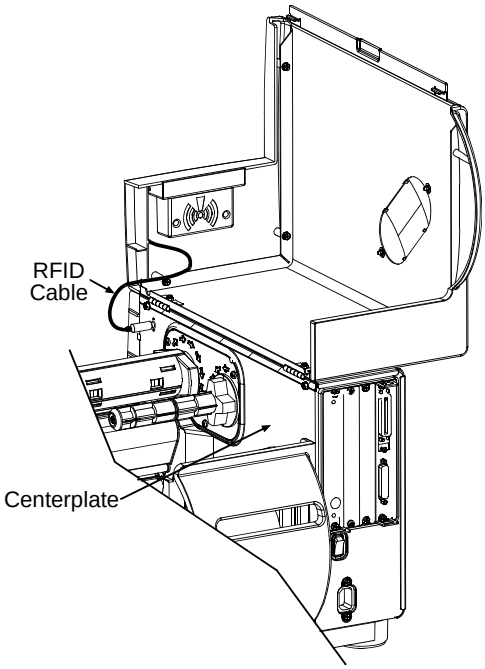

RFID Programming Information

The RFID option uses a programming device with antenna mounted just after the print head. The device is attached to the cover and thus the cover should be down for all printing applications. The RFID module will be auto-detected at power-up.

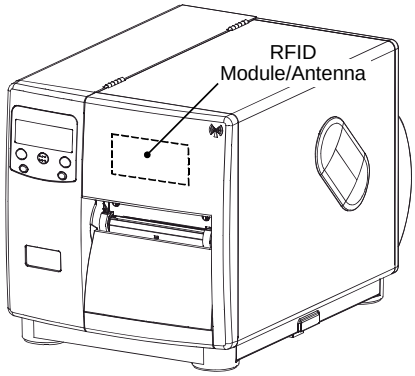

There are 2 different modules currently supported. The first is the HF (13.56mhz) by SecuraKey, capable of encoding data into standard ISO 15693 tags, which have four bytes of data per block with the number of blocks different for each manufacturer. Texas Instrument RFID stock contains 64 writable blocks while Philips contains 28 writable blocks, ST Micro LRI S12 contains 16 writable blocks.

The second is the UHF (915Mhz) by Alien, capable of encoding data into Alien Class 1 EPC tags. These contain 64 or 96 bits of user programmable data.

This section provides details of the Datamax DPL commands necessary to enable, configure, read, write, and verify RFID tags. It is divided into the following sections: Initialization, Database/Menu, Data Input, Interfaces, Data Output, and Diagnostics. This document also provides information pertaining to the scanner option related to the data read and number of valid or defective scans (good or bad barcodes).

Initialization

The initialization interface to the optional RFID module is auto baud detectable. If the option is enabled or the COM2 interface has the option selected (jumper settings on selective I/O) the firmware will query the module by sending a unique request for info from the module (i.e. version string/firmware revision request) on various supported Baud Rates to determine if the module exists.

Database / Menu

Database and Menu Selection will be constructed to support the following system level data.

The following resides on the operator's front panel menu under "PRINTER OPTIONS" → "RFID". Upon selection the display will show "NOT INSTALLED" if the device is not equipped or not communicating and then proceed to the Mode selection.

RFID	
MODE	DISABLE, UHF (915mhz), HF(13.56mhz)
POSITION	0.00 - 4.00. Currently if value is 0.00 print position is used to encode tag. If > 0.00 presented position is used.(Subject to change.)
HF SETTINGS	
AFI VALUE	2 Char Hex Value (Industry Codes)
AFI LOCK	ENABLE or DISABLE
DFSID VALUE	2 Char Hex Value (Industry Codes)
DFSID LOCK	ENABLE or DISABLE
EAS VALUE	2 Char Hex Value (Mfg. Codes)
UHF SETTINGS	
LOCK CODE	2 Char Hex Value
LOCK AFTER WRITE	ENABLE or DISABLE
ERASE ON FAULT	ENABLE or DISABLE
RETRY ATTEMPTS	0 -> 9
AUTO DETECT TAG	Moves label to find tag.

AFI - Application Family Identifier
DFSID - Data Storage Format Identifier
EAS - Electronic Article Surveillance

The following resides on the operator's front panel menu under "COMMUNICATIONS" → "HOST SETTINGS" → "OPTION FEEDBACK".

OPTION FEEDBACK	DISABLE, RFID, ASCII, HEX, SCANNER

Data Input

The input data is in the form of new System and Label Formatting commands. The system level commands consist of Database and Direct User Interface.

Database setup commands <STX>KcRI and response data <STX>KcQQQ support the entries that are shown in the Operator's Menu interface.

STX KcRIa

RFID Configuration	`RI`	M, A, D, S, L, R, W, E, P	See Table Below.	Printer Options

(RF) RFID Configuration – This command configures the optional RFID interface module as follows:

Value	Range / Interpretation
M, A, D, S, L, R, W, E, P	Mn - Mode (enables RFID module detection by the printer): Where n is: D - disabled (RFID disabled); N is also a valid disabler U - UHF (915mhz) H - HF (13.56mhz) (HF) - Ahhl - Application Family Identifier (AFI); where hh is 2 Char Hex ID & l is Lock after write (E-Enable /D-Disable) (HF) - Dhhl - Data Storage Format Identifier (DSFID); where hh is 2 Char Hex ID & l is Lock after write (E-Enable /D-Disable) (HF) - Shh - Electronic Article Surveillance (EAS) Set; where hh is 2 Char Hex ID representing manufacturers code (UHF) - Lhh – Lock Code; where hh is 2 Char Hex ID Rn - Number of retries (n = 0 to 9) Wn – Lock after write; where n is: (E-Enable /D-Disable) En – Erase (erase tag) on error; where n is: (E-Enable /D-Disable). Pxxx - Position. Currently if value is 0.00 print position is used to encode tag. If > 0.00 presented position is used.(Subject to change.)

RFID Configuration Set Commands

Example: `<STX>KcRIMH;RIA11E;RID22E;RIS04;RIR3;RIWE;RIEE;RIP000<CR>`

The above example sets the printer to HF, protect after write AFI 11, protect after write DFSID 22, set EAS Bit (Mfg. Code 0x04), allow 3 tries for each read or write attempt, lock after write and erase the tag if there is an error and position of 0.00.

STX KcOFa

Option FeedBack	`OF`	D, Rx, S	See Table Below.	Printer Options

(OF) Option Feedback Mode – This command configures the printer to output the status of the RFID operation to the current port. See Data Output section for details of the response.

Value	Range / Interpretation
D, Rx, S	D - Disable R - RFID Enable, where x = A - ASCII Response, x = H - Hexadecimal response S - Scanner Enable

The printer has two modes of operation for programming the RFID tags: **Direct** and **Label** Formatting Mode.

The Direct Mode allows the User (Host) to control the reading and writing of the RFID Tag directly. Each RFID tag is individually processed with status and data responses. This mode contains both a generic Read/Write Interface or High Level Tag HF or UHF specific interface.

The Label Formatting Mode utilizes the current printer configuration to process all the reads, write, and exception processing, (for exception processing and fault handeling see the Operator's Manual) for each tag printed. The specification for the RFID operation is contained in the data fields of a DPL label format. The label format instructs the printer to write data, read data and update selective fields prior to printing the label. It supports auto increment and decrement commands (+/-). NOTE: Currently only one RFID operation per label is allowed.

The RFID Programming Data can be entered in one of two different formats: ASCII and Hexadecimal. The ASCII format is entered as you would normally see it, i. e 'DATA'. The Hexadecimal format is entered as the hexadecimal equivalent of the ASCII, i.e DATA becomes '44415441'. When entering byte counts you must take into account the data format you are entering it in. For ASCII mode 'DATA' has a byte count of 4. For hexadecimal mode '44415441' has a byte count of 8.

Direct Mode - Generic Read/Write Interface

This interface allows the Host Application to send generic commands for RFID operations. These commands consist of simple read and write operations requiring no knowledge (except data format) of the tag types being used. They utilize the printer's database for specific parameters.

STX KaW Write Data to RFID Tag

This command instructs the RFID device to write data to the tag. It is expected that the tag transponder is within read/write distance of the RFID programming device otherwise a fault will occur and a warning message will be displayed.

Syntax:	<STX>KaWAaaabbbbcddd…		
Where:	*Aaaa*	-	Optional – for data in ASCII format followed by byte count, 000-999
	bbb	-	HF- Starting block number, (000 -> Max block number)* UHF – Should be 000.
	c	-	Command 1. Reserved for Future (should be 0)
	d	-	Command 2. Reserved for Future (should be 0)
	eee	-	Data to be encoded on RFID tag. (HF - Last used block will be null padded if necessary)
Sample:	<STX>KaW0000054455354[CR]		
This example programs the data "TEST" at block zero			

**Dependent on transponder manufacturer.*

STX KaR Read Data from RFID Tag

This command instructs the RFID device to read data from the tag and put it in a replaceable field. It is expected that the tag transponder is within read/write distance of the RFID programming device otherwise a “Void” will print in the text or barcode label fields.

Syntax:	<STX>KaRAaaabbbcdee		
Where:	*A*	-	Optional – for data in ASCII format
	aaa	-	Bytes to read.
	bbb	-	HF - Starting block number, (000 ->Max block number)* UHF – Should be 000.
	c	-	Command 1. Reserved. Should be 0.
	d	-	Command 2. Reserved. Should be 0.
	ee	-	Field number where to place data. Must be 01, 02, 03, etc… matching the order of label formatting command U. Note: a 00 value will send read data to host with no printing.
Sample:	<STX>L 1911A1802000010TEXT U X <STX>KaR0000010001 <STX>G		
This example creates a replaceable text field, 01, and recalls data from the RFID tag block zero, reading only one block, and prints the data in the location specified by replaceable field. Since there are two digits per hex value replaceable fields should be twice as long as if using ASCII data. For example, the character “A” would be returned as “41”.			

Dependent on transponder manufacturer.

Direct Mode - HF (13.56mhz) ISO15693 Tag Interface

This interface allows the Host Application to perform specific operations pertaining to HF type tags. These commands override the printer database as they interface directly to the tag module. Knowledge of HF tags and their operation is required.

STX KtW Write Data to RFID Tag

This command instructs the RFID device to write data to the tag. It is expected that the tag transponder is within read/write distance of the RFID programming device otherwise a fault will occur and warning message will be displayed.

Syntax:	<STX>KtWBnnnaaabcdeeee…		
Where:	*Bnnn (Optional)*		Where nnn is the data byte count, to allow non-printable characters, i.e. characters with hex values less than 0x20, to be encoded. For example, the command <STX>KtWB004000900<0x00><0x01><0x02><0x03>[CR] will program the hex values 0x00, 0x01, 0x02, 0x03 in block zero.
	aaa	-	Starting block number, (000->Max block number)*
	b	-	Number of retry attempts, 0-9
	c	-	Lock block after writing 0 - No Protection 1 – Write Protect
	d	-	Reserved. Should be 0.
	eeee	-	Data to be encoded on RFID tag.
Sample:	<STX>KtW000510TEST		
This example programs the data "TEST" at block zero, will write protect block zero and will attempt to write five additional times, if necessary.			

**Dependent on transponder manufacturer.*

STX KtR Read Data from RFID Tag

This command instructs the RFID device to read data from the tag and put it in a replaceable field. It is expected that the tag transponder is within read/write distance of the RFID programming device otherwise a “Void” will print in the text or barcode label fields.

Syntax:	<STX>KtRHaaabbbcdee		
Where:	*H (Optional)*	-	Hexadecimal Data – An “H” may be added directly after “R” to return a two character hex value of the data. Since there are two digits per hex value replaceable fields should be twice as long as if using ASCII data. For example, the character “A” would be returned as “41”.
	aaa	-	Starting block number, (000->Max block number*)
	bbb	-	Number of blocks to read, (001-> Max block number)*
	c	-	Number of retry attempts, 0-9
	d	-	Reserved. Should be 0.
	ee	-	Field name where to place data. Must be 01, 02, 03, etc… matching the order of label formatting command U. Note: a 00 value will send read data to host with no printing.
Sample:	<STX>L 1911A1802000010TEXT U X <STX>KtR0000019001 <STX>G		
This example creates a replaceable text field, 01, and recalls data from the RFID tag block zero, reading only one block, attempting nine times, and prints the data in the location specified by replaceable field.			

**Dependent on transponder manufacturer.*

STX KtU Read Unique Serial Number from RFID Tag

This command instructs the RFID device to read the unique serial number data from the tag and put it in a replaceable field. It is expected that the tag transponder is within read/write distance of the RFID programming device otherwise a "Void" will print in the text or barcode label fields.

Syntax:	<STX>KtUabcc		
Where:	*a*	-	Number of retry attempts, 0-9
	b	-	Reserved. Should be 0.
	cc	-	Field name where to place data. Must be 01, 02, 03, etc… matching the order of label formatting command U. Note: a 00 value will send read data to host with no printing.
Note: This is a sixteen character alphanumeric value so the replaceable field should be adequate in length.			

STX KtA Write Application Family Identifier (AFI) to Tag

This commands writes the AFI data to the tag.

Syntax:	<STX>KtAabcc		
Where:	*a*	-	Number of retry attempts, 0-9
	b	-	Lock AFI after writing 0 - No Protection 1 – Write Protect
	cc	-	Two character AFI value representing one byte.
Sample:	<STX>KtA91C3[CR]		
This example writes 0xC3 AFI byte, locking value, retrying 9 times if necessary.			

STX KtD Write Data Storage Format Identifier (DSFID) to Tag

This commands writes the DSFID data to the tag.

Syntax:	<STX>KtDabcc		
Where:	*a*	-	Number of retry attempts, 0-9
	b	-	Lock DSFID after writing 0 - No Protection 1 – Write Protect
	cc	-	Two character DFSID value representing one byte.
Sample:	<STX>KtD91C3[CR]		
This example writes 0xC3 DSFID byte, locking value, retrying 9 times if necessary.			

STX KtE Write Electronic Article Surveillance (EAS) Bit

This commands writes the EAS bit for Philips ISO tags.

Syntax:	<STX>KtEabcc		
Where:	*a*	-	Number of retry attempts, 0-9
	b	-	EAS Option: 0 – SET EAS 1 – RESET EAS 2 – TEST EAS
	cc	-	Two character Mfg Code representing one byte.
Sample:	<STX>KtE9004[CR]		
This example writes EAS bit for Philips (0x04), retrying 9 times if necessary.			

STX KtH Read and Feedback Tag Information to Host

This command returns the tag info to host. This currently works only if the Data Flag for the tag is 0x0F, i.e. the tag contains DSFID, AFI, VICC and IC data.

Syntax:	<STX>KtH
Sample Feedback:	
DATA FLAG: 0x0F TAG ID: E004010000751412 DSFID: 0xE3 AFI: 0x01 NUM BLK: 0x1B BLK SIZ: 0x03 IC REF: 0x01	

Direct Mode- UHF (915mhz) Class 1 Tag Interface

This interface allows the Host Application to perform specific operations pertaining to UHF type tags. These commands override the printer database as they interface directly to the tag module. Knowledge of ALIEN CLASS 1Tags and their operation is required.

STX KuW Write Data to RFID Tag

This command instructs the RFID device to write data to the tag. It is expected that the tag transponder is within read/write distance of the RFID programming device otherwise a fault will occur and warning message will be displayed.

Syntax:	<STX>KuWabcc…		
Where:	*a*	-	Number of attempts to locate tag, erase and program. Valid values: 1-9.
	b	-	Reserved. Should be 0.
	c	-	Data to be encoded on RFID tag in ASCII format. Must be 16 characters length. Valid characters: 0-9, A-F.
Sample:	<STX>KuW30ABCDEF0102030405[CR]		
This example programs the data <0xAB><0xCD><0xEF><0x01><0x02><0x03><0x04><0x05> to the tag and will attempt to write three additional times, if necessary.			

STX KuR Read Data from RFID Tag

This command instructs the RFID device to read data from the tag and put it in a replaceable field. It is expected that the tag transponder is within read/write distance of the RFID programming device otherwise a "Void" will print in the text or barcode label fields.

Syntax:	<STX>KuRaa		
Where:	*aa*	-	Field name where to place data. Must be 01, 02, 03, etc… matching the order of label formatting command U.
Sample:	<STX>L D11 1911A1801000100 xxxxxxxx U 1A31050002000200 xxxxxxxx U X <STX>KuR01 <STX>Kur02 <STX>G		
This example creates a replaceable text field 01 and barcode field 02. It recalls the data from the tag and places it into both fields.			

STX KuE Erase RFID Tag

This command erases tag.

Syntax:	<STX>KuEa		
Where:	*a*	-	Number of attempts to locate tag and erase. Valid values: 1-9.

STX KuL Lock RFID Tag

This command erases tag.

Syntax:	<STX>KuLabb		
Where:	*a*	-	Number of attempts to locate tag and lock. Valid values: 1-9.
	b	-	Two character Lock Code value representing one byte.

Commands to Send Data back to Host

STX KuT	Send Tag ID
STX KuV	Send Tag ID with Verify
STX KuG	Send Tag ID with Global Scroll
STX KuI	Send Inventory

Wx / W1x: RFID
abbbcdeeeffffggggjj….j

Field	Valid Inputs	Meaning
a	Operation to perform (Read/Write/Write Verify)	1-Read[1], 2- Write, 3-Write/Verify
bbb	Wnx, RFID Hexadecimal Operation. No n is an implied 1.	RFID
c	Not Used	
d	Not Used	
eee	xyy, Lock after write x = 0 - Use printer setup to determine if lock is performed after write. x = 1 – Perform lock after write. yy = Lock Code where yy is a 2 character hex value (UHF only).	
ffff	Starting Block # (HF only), Valid Entries 0000 – 9998	Starting block # to write
gggg	Not Used	
jj…j	Valid Hexadecimal character string followed by a termination character.	Write Data

Note 1: Read function not currently implemented.

Example:

```
<STX>L
D11<CR>
2W1x00000000100004461746 16D6178207772697465732052464944206265 7374<CR>
E
```

The example above:
Field 1
"2*W1x***00000000100004461746 16D6178207772697465732052464944206265 7374***<CR>*"**,**
the printer encodes the RFID chip starting at block 001 with "Datamax writes RFID best".

WX / W1X: **RFID with Byte Count Specifier**

W1X: RFID
abbbcdeeeffffgggghhhhjj….j

Specified Length – The upper case R identifies a RFID data with a string 4-digit length specifier. This allows values 0x00 through 0xFF to be included within the data strings without conflicting with the DPL format record terminators. The four-digit decimal data byte count immediately follows the four-digit column position field. This value includes all of the data following the byte count field, but does not include itself.

Field	Valid Inputs	Meaning
a	Operation to perform (Read/Write/Write Verify)	1-Read[1], 2-Write, 3-Write/Verify
bbb	Wnx, RFID ASCII Operation. No n is an implied 1.	RFID
c	Not Used	
d	Not Used	
eee	xyy, Lock after write x = 0 - Use printer setup to determine if lock is performed after write. x = 1 – Perform lock after write. yy = Lock Code where yy is a 2 character hex value (UHF only).	
ffff	Starting Block # (HF only), Valid Entries 0000 – 9998	Starting block # to write
gggg	Not Used	
hhhh	Four-digit decimal data byte count and includes all bytes that follow until the end of the data. Note: UHF is restricted to 64 to 96 bits (8 to 12 ASCII Characters).	# of bytes to follow
jj…j	ASCII Character string equal to hhhh characters to write.	Write Data

Example:
<STX>L
D11<CR>
2W1X00000000100000*0024*Datamax<CR>
writes RFID best<CR>
E

The example above:

Field 1 "***1W1X00000000100000024Datamax<CR>Writes RFID best <CR>***" includes a Byte Count Specifier (*the portion in bold*), where 0024 equals the four-digit decimal data byte count and includes all bytes that follow until the end of the data. Field termination is set by the byte count. The printer encodes the RFID chip starting at block 001 with "Datamax<CR>writes RFID best".

Data Output

Host response must be enabled for the data to be returned to the host. This is under COMMUNICATIONS: HOST SETTINGS:OPTION FEEDBACK. Set to SCANNER or RFID.

In summary, the firmware will report information about the operation of the last label printed. This includes a report of the number of expected scans/reads, the number of actual scans/reads, the printer's internal JobID, the printer's internal SubJobId and the data. One response per label is returned to the host. This includes each voided and retried label. The format of the printer response message is:

<A; B; C; D; E; F>[CR]

Where,
A is device type – "S" for scanner, "R" for RFID, etc…
B is the resulting status - "F" for Faulted label, "C" for entire label complete, "U" for unknown.
C is the number of expected reads (barcodes/tags). (2 characters)
D is the number of good reads. (barcodes/tags) (2 characters)
E is the printer's internal JobId:SubJobId. (4 characters each)
F is the data read, delimited with ";" if multiple reads.

An example of a successful label would be:
<S;C;03;03;0002:0001;DATA1;DATA2;DATA3>[CR]

An example of a failed label that was retried successfully:
<S;F;02;01;0002:0001;DATA1>[CR]
<S;C;02;02;0002:0001;DATA1;DATA2>[CR]

For RFID tags write and write/verify the data returned is in the same format as it was written. Write returns entire tag data. Write/verify returns data written. Read returns data and length requested in specified format.

Write sample response:
<R;C;00;00;0013:0001>[CR]

Write/Verify hexadecimal sample response:
<R;C;01;01;0012:0001;446174616D6178207772697465732052464944206265737 4>[CR]

Read hexadecimal Response:
<R;C;01;01;0013:0001;446174616D6178207772697465732052464944206265737 4>[CR]

Write/Verify ASCII sample response:
<R;C;01;01;0012:0001; Datamax writes RFID best >[CR]

Read ASCII Response:
<R;C;01;01;0013:0001; Datamax writes RFID best >[CR]

Diagnostics

The following features have been added on the operator's front panel menu under "DIAGNOSTICS" → "OPTIONS TESTING" → "TEST RFID" → "TEST HF" OR "TEST UHF".

Upon selection the display will show "NOT INSTALLED" if the device is not equipped or not communicating and then proceed to the Mode selection.

- "TAG DATA" – This acts as an RFID reader and will read and display data from block zero through ten for HF or the entire tag for UHF. If the tag cannot be found after 10 tries a message "Cannot Read RFID Tag" will be displayed.

- "DEVICE VERSION" – This queries and displays the serial number of the RFID programming device and the firmware version. This is useful for verifying the device is communicating properly.

- "TAG ID" – (HF only) This queries and displays the unique serial number for the tag.