Appendix B: Antenna Dimensions and Separation Distances

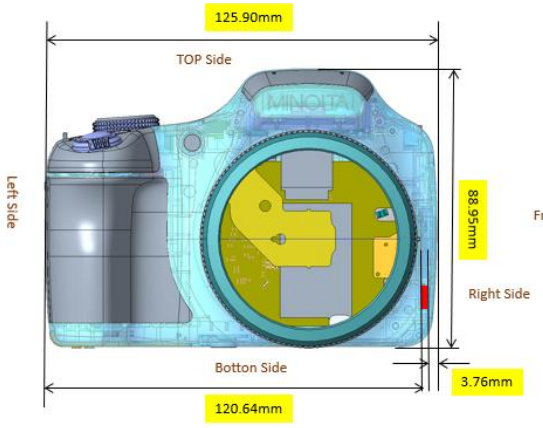

<EUT Front Side View>

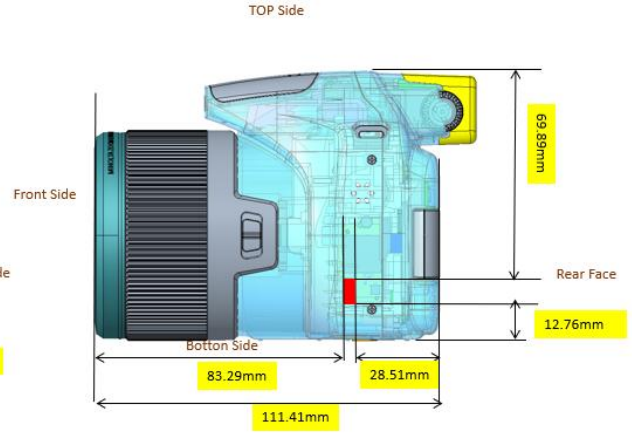

<EUT Right Side View>

Antenna	TO Front Side	TO Rear Face	TO TOP Side	TO Botton Side	TO Left Side	TO Right Side
	(mm)	(mm)	(mm)	(mm)	(mm)	(mm)
WLAN	83.29	28.51	69.89	12.76	120.64	3.76

Underwriters Laboratories Taiwan Co., Ltd.
This report shall not be reproduced without the written approval of Underwriters Laboratories Taiwan Co., Ltd.

Appendix C: SAR System Check Plots

Test Laboratory : Underwriters Laboratories Taiwan Co., Ltd Date: 2025/9/30

System Performance Check-2450MHz

DUT: D2450V2-988

Communication System: UID 0, CW (0); Frequency: 2450 MHz; Communication System PAR: 0 dB
Medium parameters used: f = 2450 MHz; σ = 1.772 S/m; ε_r = 38.771; ρ = 1000 kg/m^3
Phantom section: Flat Section
Ambient Temperature : 23.6 ; Liquid Temperature : 22.6℃

DASY Configuration:

- Probe: EX3DV4 - SN7515; ConvF(6.95, 6.84, 7.15) @ 2450 MHz; Calibrated: 2025/1/7
  - Modulation Compensation:
- Sensor-Surface: 1.4mm (Mechanical Surface Detection), z = 1.0, 31.0
- Electronics: DAE4 Sn1305; Calibrated: 2025/4/22
- Phantom: ELI v5.0_1213; Type: QDOVA001BB; Serial: 1213
- DASY52 52.10.4(1535); SEMCAD X 14.6.14(7501)

System Check/2450MHz/Area Scan (71x71x1): Interpolated grid: dx=1.200 mm, dy=1.200 mm
Maximum value of SAR (interpolated) = 21.1 W/kg

System Check/2450MHz/Zoom Scan (7x7x7)/Cube 0: Measurement grid: dx=5mm, dy=5mm, dz=5mm
Reference Value = 115.9 V/m; Power Drift = -0.05 dB
Peak SAR (extrapolated) = 25.3 W/kg
SAR(1 g) = 12.6 W/kg; SAR(10 g) = 5.8 W/kg
Smallest distance from peaks to all points 3 dB below = 9.1 mm
Ratio of SAR at M2 to SAR at M1 = 49.3%
Maximum value of SAR (measured) = 20.8 W/kg

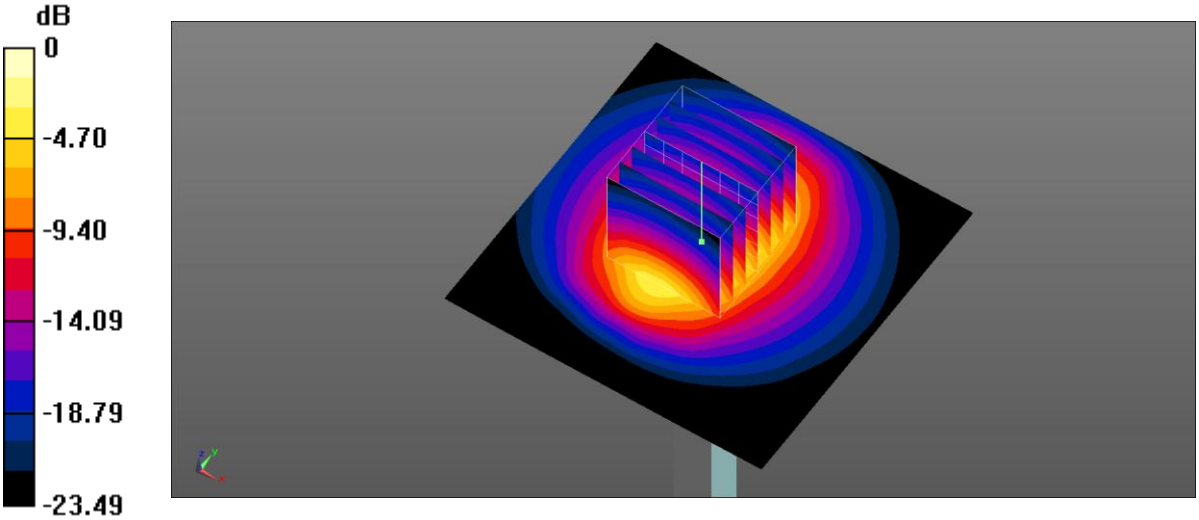

0 dB = 20.8 W/kg = 13.18 dBW/kg

Underwriters Laboratories Taiwan Co., Ltd.
This report shall not be reproduced without the written approval of Underwriters Laboratories Taiwan Co., Ltd.

Appendix D: Highest SAR Test Plots

Test Laboratory : Underwriters Laboratories Taiwan Co., Ltd Date: 2025/9/30

Wi-Fi 2.4GHz_802.11b(1Mbps)_Right Side_0mm_ch1

DUT: Camera

Communication System: UID 0, 802.11b (0); Frequency: 2412 MHz; Communication System PAR: 0 dB
Medium parameters used: f = 2412 MHz; σ = 1.757 S/m; ε_r = 39.146; ρ = 1000 kg/m^3
Phantom section: Flat Section
Ambient Temperature : 23.6℃ ; Liquid Temperature : 22.6 ℃

DASY Configuration:

- Probe: EX3DV4 - SN7515; ConvF(6.95, 6.84, 7.15) @ 2412 MHz; Calibrated: 2025/1/7
  - Modulation Compensation:
- Sensor-Surface: 1.4mm (Mechanical Surface Detection), z = -99.0, 31.0
- Electronics: DAE4 Sn1305; Calibrated: 2025/4/22
- Phantom: ELI v5.0_1213; Type: QDOVA001BB; Serial: 1213
- DASY52 52.10.4(1535); SEMCAD X 14.6.14(7501)

SAR/802.11/Area Scan (81x101x1): Interpolated grid: dx=1.200 mm, dy=1.200 mm
Maximum value of SAR (interpolated) = 1.92 W/kg

SAR/802.11/Zoom Scan (7x7x7)/Cube 0: Measurement grid: dx=5mm, dy=5mm, dz=5mm
Reference Value = 15.13 V/m; Power Drift = -0.14 dB
Peak SAR (extrapolated) = 2.03 W/kg
SAR(1 g) = 0.937 W/kg; SAR(10 g) = 0.373 W/kg
Smallest distance from peaks to all points 3 dB below = 8.1 mm
Ratio of SAR at M2 to SAR at M1 = 47.1%
Maximum value of SAR (measured) = 1.58 W/kg

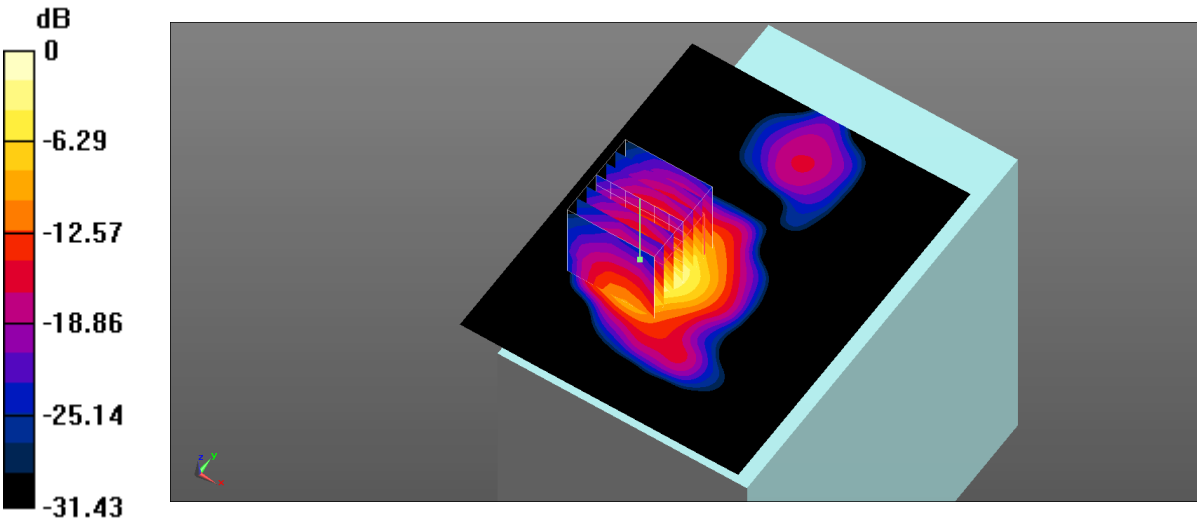

0 dB = 1.58 W/kg = 1.99 dBW/kg

Underwriters Laboratories Taiwan Co., Ltd.
This report shall not be reproduced without the written approval of Underwriters Laboratories Taiwan Co., Ltd.

Test Laboratory : Underwriters Laboratories Taiwan Co., Ltd Date: 2025/9/30

Wi-Fi 2.4GHz_802.11b(1Mbps)_Right Side_0mm_ch1;Repeat

DUT: Camera

Communication System: UID 0, 802.11b (0); Frequency: 2412 MHz; Communication System PAR: 0 dB
Medium parameters used: f = 2412 MHz; σ = 1.757 S/m; ε_r = 39.146; ρ = 1000 kg/m^3
Phantom section: Flat Section
Ambient Temperature : 23.6℃ ; Liquid Temperature : 22.6 ℃

DASY Configuration:

- Probe: EX3DV4 - SN7515; ConvF(6.95, 6.84, 7.15) @ 2412 MHz; Calibrated: 2025/1/7
  - Modulation Compensation:
- Sensor-Surface: 1.4mm (Mechanical Surface Detection), z = -99.0, 31.0
- Electronics: DAE4 Sn1305; Calibrated: 2025/4/22
- Phantom: ELI v5.0_1213; Type: QDOVA001BB; Serial: 1213
- DASY52 52.10.4(1535); SEMCAD X 14.6.14(7501)

SAR/802.11/Area Scan (81x101x1): Interpolated grid: dx=1.200 mm, dy=1.200 mm
Maximum value of SAR (interpolated) = 2.15 W/kg

SAR/802.11/Zoom Scan (7x7x7)/Cube 0: Measurement grid: dx=5mm, dy=5mm, dz=5mm
Reference Value = 9.616 V/m; Power Drift = -0.12 dB
Peak SAR (extrapolated) = 2.01 W/kg
SAR(1 g) = 0.914 W/kg; SAR(10 g) = 0.365 W/kg
Smallest distance from peaks to all points 3 dB below = 8.1 mm
Ratio of SAR at M2 to SAR at M1 = 45.7%
Maximum value of SAR (measured) = 1.53 W/kg

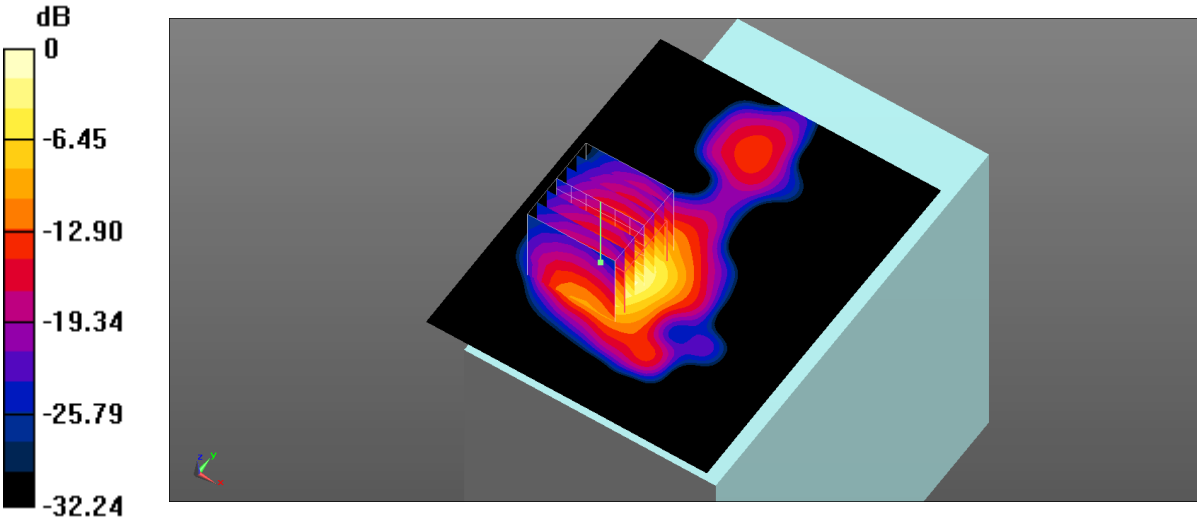

0 dB = 1.53 W/kg = 1.85 dBW/kg

Underwriters Laboratories Taiwan Co., Ltd.
This report shall not be reproduced without the written approval of Underwriters Laboratories Taiwan Co., Ltd.

Appendix E: SAR Probe and Dipole Calibration Certificates

Underwriters Laboratories Taiwan Co., Ltd.
This report shall not be reproduced without the written approval of Underwriters Laboratories Taiwan Co., Ltd.

Calibration Laboratory of
Schmid & Partner
Engineering AG
Zeughausstrasse 43, 8004 Zurich, Switzerland

S Schweizerischer Kalibrierdienst
C Service suisse d'étalonnage
Servizio svizzero di taratura
S Swiss Calibration Service

Accredited by the Swiss Accreditation Service (SAS)
The Swiss Accreditation Service is one of the signatories to the EA Multilateral Agreement for the recognition of calibration certificates

Accreditation No.: SCS 0108

Client UL
Hsinchu County

Certificate No. D2450V2-988_Sep23

CALIBRATION CERTIFICATE

Object	D2450V2 - SN:988
Calibration procedure(s)	QA CAL-05.v12 Calibration Procedure for SAR Validation Sources between 0.7-3 GHz
Calibration date:	September 12, 2023

This calibration certificate documents the traceability to national standards, which realize the physical units of measurements (SI).
The measurements and the uncertainties with confidence probability are given on the following pages and are part of the certificate.

All calibrations have been conducted in the closed laboratory facility: environment temperature (22 ± 3)°C and humidity < 70%.

Calibration Equipment used (M&TE critical for calibration)

Primary Standards	ID #	Cal Date (Certificate No.)	Scheduled Calibration
Power meter NRP2	SN: 104778	30-Mar-23 (No. 217-03804/03805)	Mar-24
Power sensor NRP-Z91	SN: 103244	30-Mar-23 (No. 217-03804)	Mar-24
Power sensor NRP-Z91	SN: 103245	30-Mar-23 (No. 217-03805)	Mar-24
Reference 20 dB Attenuator	SN: BH9394 (20k)	30-Mar-23 (No. 217-03809)	Mar-24
Type-N mismatch combination	SN: 310982 / 06327	30-Mar-23 (No. 217-03810)	Mar-24
Reference Probe EX3DV4	SN: 7349	10-Jan-23 (No. EX3-7349_Jan23)	Jan-24
DAE4	SN: 601	19-Dec-22 (No. DAE4-601_Dec22)	Dec-23

Secondary Standards	ID #	Check Date (in house)	Scheduled Check
Power meter E4419B	SN: GB39512475	30-Oct-14 (in house check Oct-22)	In house check: Oct-24
Power sensor HP 8481A	SN: US37292783	07-Oct-15 (in house check Oct-22)	In house check: Oct-24
Power sensor HP 8481A	SN: MY41093315	07-Oct-15 (in house check Oct-22)	In house check: Oct-24
RF generator R&S SMT-06	SN: 100972	15-Jun-15 (in house check Oct-22)	In house check: Oct-24
Network Analyzer Agilent E8358A	SN: US41080477	31-Mar-14 (in house check Oct-22)	In house check: Oct-24

	Name	Function	Signature
Calibrated by:	Krešimir Franjić	Laboratory Technician	
Approved by:	Sven Kühn	Technical Manager	

Issued: September 12, 2023

This calibration certificate shall not be reproduced except in full without written approval of the laboratory.

Glossary:

TSL	tissue simulating liquid
ConvF	sensitivity in TSL / NORM x,y,z
N/A	not applicable or not measured

Calibration is Performed According to the Following Standards:

a) IEC/IEEE 62209-1528, "Measurement Procedure For The Assessment Of Specific Absorption Rate Of Human Exposure To Radio Frequency Fields From Hand-Held And Body-Worn Wireless Communication Devices - Part 1528: Human Models, Instrumentation And Procedures (Frequency Range of 4 MHz to 10 GHz)", October 2020.
b) KDB 865664, "SAR Measurement Requirements for 100 MHz to 6 GHz"

Additional Documentation:

c) DASY System Handbook

Methods Applied and Interpretation of Parameters:

- *Measurement Conditions:* Further details are available from the Validation Report at the end of the certificate. All figures stated in the certificate are valid at the frequency indicated.
- *Antenna Parameters with TSL:* The source is mounted in a touch configuration below the center marking of the flat phantom.
- *Return Loss:* This parameter is measured with the source positioned under the liquid filled phantom (as described in the measurement condition clause). The Return Loss ensures low reflected power. No uncertainty required.
- *SAR measured:* SAR measured at the stated antenna input power.
- *SAR normalized:* SAR as measured, normalized to an input power of 1 W at the antenna connector.
- *SAR for nominal TSL parameters:* The measured TSL parameters are used to calculate the nominal SAR result.

The reported uncertainty of measurement is stated as the standard uncertainty of measurement multiplied by the coverage factor k=2, which for a normal distribution corresponds to a coverage probability of approximately 95%.

Measurement Conditions

DASY system configuration, as far as not given on page 1.

DASY Version	DASY52	V52.10.4
Extrapolation	Advanced Extrapolation	
Phantom	Modular Flat Phantom	
Distance Dipole Center - TSL	10 mm	with Spacer
Zoom Scan Resolution	dx, dy, dz = 5 mm	
Frequency	2450 MHz ± 1 MHz	

Head TSL parameters

The following parameters and calculations were applied.

	Temperature	**Permittivity**	**Conductivity**
Nominal Head TSL parameters	22.0 °C	39.2	1.80 mho/m
Measured Head TSL parameters	(22.0 ± 0.2) °C	37.8 ± 6 %	1.83 mho/m ± 6 %
Head TSL temperature change during test	< 0.5 °C	----	----

SAR result with Head TSL

SAR averaged over 1 cm^3 (1 g) of Head TSL	Condition	
SAR measured	250 mW input power	13.2 W/kg
SAR for nominal Head TSL parameters	normalized to 1W	**51.9 W/kg ± 17.0 % (k=2)**

SAR averaged over 10 cm^3 (10 g) of Head TSL	condition	
SAR measured	250 mW input power	6.21 W/kg
SAR for nominal Head TSL parameters	normalized to 1W	**24.6 W/kg ± 16.5 % (k=2)**

Appendix (Additional assessments outside the scope of SCS 0108)

Antenna Parameters with Head TSL

Impedance, transformed to feed point	52.5 Ω + 4.7 jΩ
Return Loss	- 25.8 dB

General Antenna Parameters and Design

Electrical Delay (one direction)	1.157 ns

After long term use with 100W radiated power, only a slight warming of the dipole near the feedpoint can be measured.

The dipole is made of standard semirigid coaxial cable. The center conductor of the feeding line is directly connected to the second arm of the dipole. The antenna is therefore short-circuited for DC-signals. On some of the dipoles, small end caps are added to the dipole arms in order to improve matching when loaded according to the position as explained in the "Measurement Conditions" paragraph. The SAR data are not affected by this change. The overall dipole length is still according to the Standard.
No excessive force must be applied to the dipole arms, because they might bend or the soldered connections near the feedpoint may be damaged.

Additional EUT Data

Manufactured by	SPEAG

DASY5 Validation Report for Head TSL

Date: 12.09.2023

Test Laboratory: SPEAG, Zurich, Switzerland

DUT: Dipole 2450 MHz; Type: D2450V2; Serial: D2450V2 - SN:988

Communication System: UID 0 - CW; Frequency: 2450 MHz
Medium parameters used: f = 2450 MHz; σ = 1.83 S/m; ε_r = 37.8; ρ = 1000 kg/m^3
Phantom section: Flat Section
Measurement Standard: DASY5 (IEEE/IEC/ANSI C63.19-2011)

DASY52 Configuration:

- Probe: EX3DV4 - SN7349; ConvF(7.9, 7.9, 7.9) @ 2450 MHz; Calibrated: 10.01.2023
- Sensor-Surface: 1.4mm (Mechanical Surface Detection)
- Electronics: DAE4 Sn601; Calibrated: 19.12.2022
- Phantom: Flat Phantom 5.0 (front); Type: QD 000 P50 AA; Serial: 1001
- DASY52 52.10.4(1535); SEMCAD X 14.6.14(7501)

Dipole Calibration for Head Tissue/Pin=250 mW, d=10mm/Zoom Scan (7x7x7)/Cube 0:

Measurement grid: dx=5mm, dy=5mm, dz=5mm
Reference Value = 115.4 V/m; Power Drift = 0.06 dB
Peak SAR (extrapolated) = 25.6 W/kg
SAR(1 g) = 13.2 W/kg; SAR(10 g) = 6.21 W/kg
Smallest distance from peaks to all points 3 dB below = 9 mm
Ratio of SAR at M2 to SAR at M1 = 52%
Maximum value of SAR (measured) = 21.4 W/kg

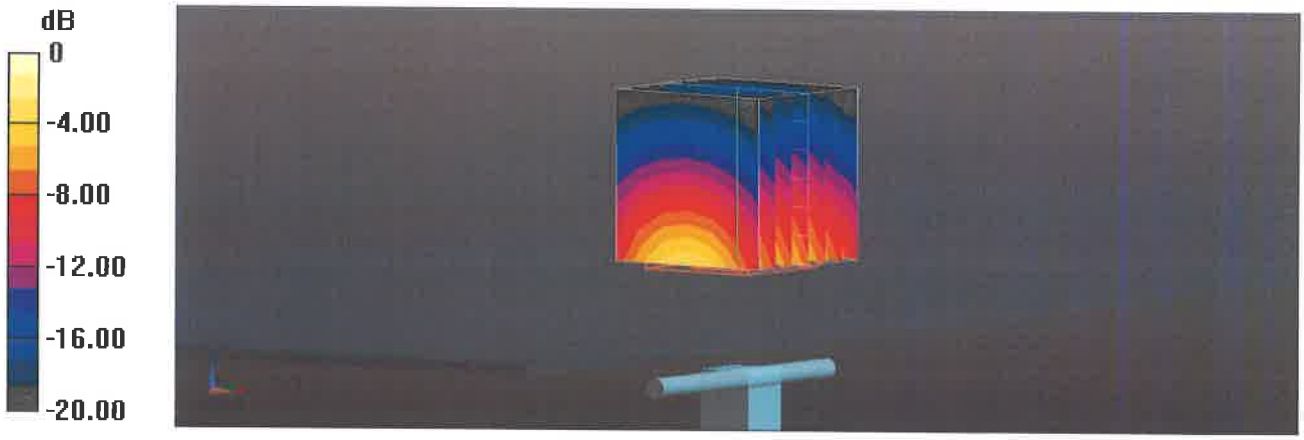

0 dB = 21.4 W/kg = 13.30 dBW/kg

Impedance Measurement Plot for Head TSL

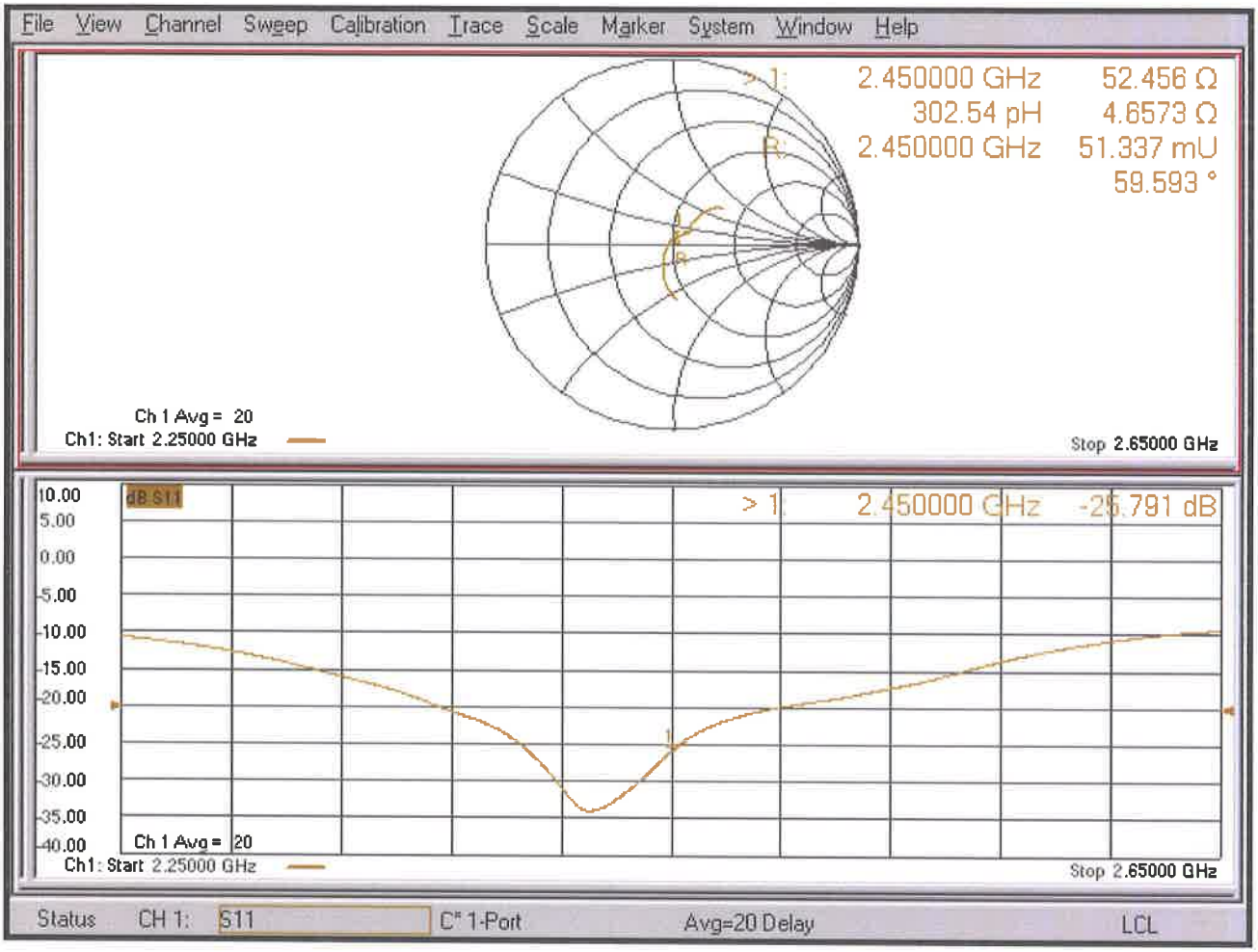

Dipole: 2450MHz, S/N: 988, Dipole calibration

According to KDB 865664 & IEEE Std 1528 - 2013:

3.2.2. Dipole calibration

It is necessary to re-calibrate reference dipoles at regular intervals to confirm the electrical specifications and SAR targets. A dipole must be calibrated using a fully validated SAR system according to the tissue dielectric parameters and SAR probe calibration frequency required for device testing. It is generally unacceptable to calibrate a dipole using the SAR system that has been validated by the same dipole; therefore, dipoles should be returned to the SAR system manufacturer or its designated calibration facilities for re-calibration. However, instead of the typical annual calibration recommended by measurement standards, longer calibration intervals of up to three years may be considered when it is demonstrated that the SAR target, impedance and return loss of a dipole have remain stable according to the following requirements.

1) The test laboratory must ensure that the required supporting information and documentation are included in the SAR report to qualify for the three-year extended calibration interval; otherwise, the IEEE Std 1528-2013 recommended annual calibration applies.
2) Immediate re-calibration is required for the following conditions.
   a) After a dipole is damaged and properly repaired to meet required specifications.
   b) When the measured SAR deviates from the calibrated SAR value by more than 10% due to changes in physical, mechanical, electrical or other relevant dipole conditions; i.e., the error is not introduced by incorrect measurement procedures or other issues relating to the SAR measurement system.
   c) When the most recent return-loss result, measured at least annually, deviates by more than 20% from the previous measurement (i.e. value in dB × 0.2) or not meeting the required 20 dB minimum return-loss requirement.[24]
   d) When the most recent measurement of the real or imaginary parts of the impedance, measured at least annually, deviates by more than 5 Ω from the previous measurement.

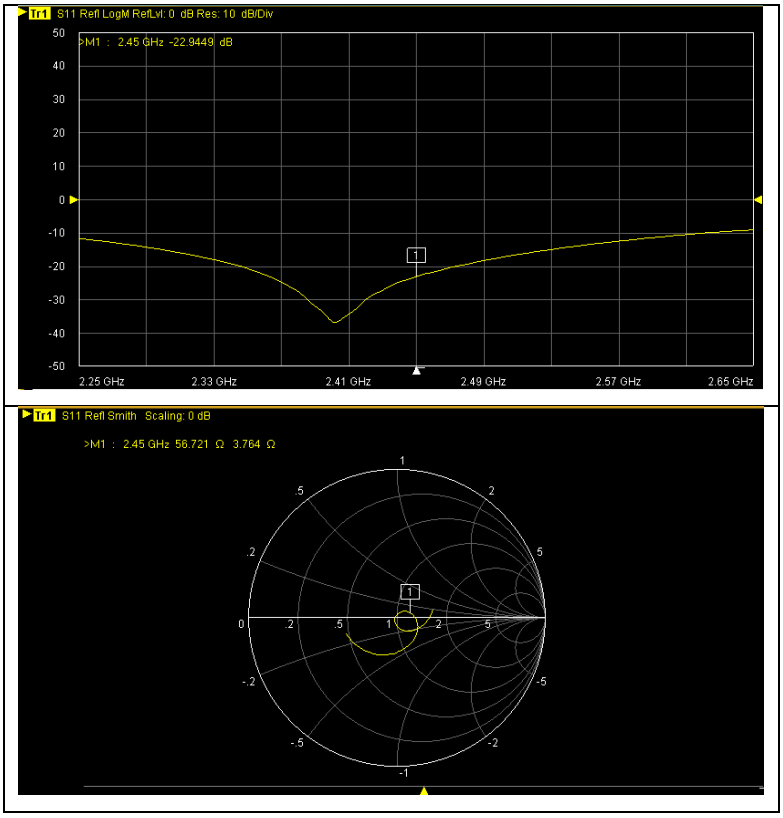

Copyright© 2024 UL LLC. All Rights reserved. May not be reproduced without permission. THIS DOCUMENT IS CLASSIFIED CONFIDENTIAL. It is intended for Internal Use Only and may not be disclosed to any party that is not authorized to receive it.

Calibration Date	Impedance R (ohm)	Delta (ohm)	Impedance jX (ohm)	Delta (ohm)	Return-loss (dB)	Delta (%)
2023/9/12	52.456	N/A	4.6573	N/A	-25.791	N/A
2025/9/11	56.721	4.26	3.764	-0.89	-22.9449	-11.04

Copyright© 2024 UL LLC. All Rights reserved. May not be reproduced without permission. THIS DOCUMENT IS CLASSIFIED CONFIDENTIAL. It is intended for Internal Use Only and may not be disclosed to any party that is not authorized to receive it.

Calibration Laboratory of
Schmid & Partner
Engineering AG
Zeughausstrasse 43, 8004 Zurich, Switzerland

S Schweizerischer Kalibrierdienst
C Service suisse d'étalonnage
S Servizio svizzero di taratura
Swiss Calibration Service

Accredited by the Swiss Accreditation Service (SAS)
The Swiss Accreditation Service is one of the signatories to the EA Multilateral Agreement for the recognition of calibration certificates

Accreditation No.: SCS 0108

Client **Auden**
Taoyuan City

Certificate No: DAE4-1305_Apr25

CALIBRATION CERTIFICATE

Object	DAE4 - SD 000 D04 BM - SN: 1305
Calibration procedure(s)	QA CAL-06.v30 Calibration procedure for the data acquisition electronics (DAE)
Calibration date:	April 22, 2025

This calibration certificate documents the traceability to national standards, which realize the physical units of measurements (SI).
The measurements and the uncertainties with confidence probability are given on the following pages and are part of the certificate.

All calibrations have been conducted in the closed laboratory facility: environment temperature (22 ± 3)°C and humidity < 70%.

Calibration Equipment used (M&TE critical for calibration)

Primary Standards	ID #	Cal Date (Certificate No.)	Scheduled Calibration
Keithley Multimeter Type 2001	SN: 0810278	27-Aug-24 (No:40547)	Aug-25

Secondary Standards	ID #	Check Date (in house)	Scheduled Check
Auto DAE Calibration Unit	SE UWS 053 AA 1001	23-Jan-25 (in house check)	In house check: Jan-26
Calibrator Box V2.1	SE UMS 006 AA 1002	23-Jan-25 (in house check)	In house check: Jan-26

	Name	Function	Signature
Calibrated by:	Dominique Steffen	Laboratory Technician	
Approved by:	Sven Kühn	Technical Manager	i.V.

Issued: April 22, 2025

This calibration certificate shall not be reproduced except in full without written approval of the laboratory.

Glossary

DAE	data acquisition electronics
Connector angle	information used in DASY system to align probe sensor X to the robot coordinate system.

Methods Applied and Interpretation of Parameters

- *DC Voltage Measurement:* Calibration Factor assessed for use in DASY system by comparison with a calibrated instrument traceable to national standards. The figure given corresponds to the full scale range of the voltmeter in the respective range.
- *Connector angle*: The angle of the connector is assessed measuring the angle mechanically by a tool inserted. Uncertainty is not required.
- The following parameters as documented in the Appendix contain technical information as a result from the performance test and require no uncertainty.
  - *DC Voltage Measurement Linearity:* Verification of the Linearity at +10% and -10% of the nominal calibration voltage. Influence of offset voltage is included in this measurement.
  - *Common mode sensitivity:* Influence of a positive or negative common mode voltage on the differential measurement.
  - *Channel separation:* Influence of a voltage on the neighbor channels not subject to an input voltage.
  - *AD Converter Values with inputs shorted:* Values on the internal AD converter corresponding to zero input voltage
  - *Input Offset Measurement*: Output voltage and statistical results over a large number of zero voltage measurements.
  - *Input Offset Current:* Typical value for information; Maximum channel input offset current, not considering the input resistance.
  - *Input resistance:* Typical value for information: DAE input resistance at the connector, during internal auto-zeroing and during measurement.
  - *Low Battery Alarm Voltage:* Typical value for information. Below this voltage, a battery alarm signal is generated.
  - *Power consumption:* Typical value for information. Supply currents in various operating modes.

DC Voltage Measurement

A/D - Converter Resolution nominal

High Range:	1LSB =	6.1μV ,	full range =	-100...+300 mV
Low Range:	1LSB =	61nV ,	full range =	-1.....+3mV

DASY measurement parameters: Auto Zero Time: 3 sec; Measuring time: 3 sec

Calibration Factors	X	Y	Z
High Range	403.841 ± 0.02% (k=2)	404.006 ± 0.02% (k=2)	404.329 ± 0.02% (k=2)
Low Range	3.98153 ± 1.50% (k=2)	3.99125 ± 1.50% (k=2)	3.99805 ± 1.50% (k=2)

Connector Angle

Connector Angle to be used in DASY system	97.5 ° ± 1 °

Appendix (Additional assessments outside the scope of SCS0108)

1. DC Voltage Linearity

High Range		Reading (μV)	Difference (μV)	Error (%)
Channel X	+ Input	199995.52	-0.14	-0.00
Channel X	+ Input	20004.77	2.88	0.01
Channel X	- Input	-20001.66	1.43	-0.01
Channel Y	+ Input	199994.98	-0.78	-0.00
Channel Y	+ Input	20000.68	-1.16	-0.01
Channel Y	- Input	-20003.71	-0.44	0.00
Channel Z	+ Input	199998.02	2.16	0.00
Channel Z	+ Input	20001.12	-0.75	-0.00
Channel Z	- Input	-20003.45	-0.29	0.00

Low Range		Reading (μV)	Difference (μV)	Error (%)
Channel X	+ Input	2000.33	-0.08	-0.00
Channel X	+ Input	201.76	1.23	0.61
Channel X	- Input	-198.49	0.75	-0.38
Channel Y	+ Input	2000.38	0.09	0.00
Channel Y	+ Input	200.17	-0.18	-0.09
Channel Y	- Input	-199.61	-0.24	0.12
Channel Z	+ Input	2000.84	0.63	0.03
Channel Z	+ Input	199.89	-0.41	-0.21
Channel Z	- Input	-199.87	-0.42	0.21

2. Common mode sensitivity

DASY measurement parameters: Auto Zero Time: 3 sec; Measuring time: 3 sec

	Common mode Input Voltage (mV)	High Range Average Reading (μV)	Low Range Average Reading (μV)
Channel X	200	8.02	6.42
	- 200	-5.12	-6.74
Channel Y	200	-23.00	-22.91
	- 200	22.42	22.43
Channel Z	200	-9.60	-9.73
	- 200	7.68	7.83

3. Channel separation

DASY measurement parameters: Auto Zero Time: 3 sec; Measuring time: 3 sec

	Input Voltage (mV)	Channel X (μV)	Channel Y (μV)	Channel Z (μV)
Channel X	200	-	1.06	-4.94
Channel Y	200	8.41	-	1.90
Channel Z	200	10.55	6.37	-

4. AD-Converter Values with inputs shorted

DASY measurement parameters: Auto Zero Time: 3 sec; Measuring time: 3 sec

	High Range (LSB)	Low Range (LSB)
Channel X	15872	15578
Channel Y	16286	15409
Channel Z	15946	12694

5. Input Offset Measurement

DASY measurement parameters: Auto Zero Time: 3 sec; Measuring time: 3 sec
Input 10MΩ

	Average (μV)	min. Offset (μV)	max. Offset (μV)	Std. Deviation (μV)
Channel X	1.32	0.56	2.55	0.36
Channel Y	0.07	-1.20	0.77	0.34
Channel Z	-0.06	-2.53	1.56	0.52

6. Input Offset Current

Nominal Input circuitry offset current on all channels: <25fA

7. Input Resistance (Typical values for information)

	Zeroing (kOhm)	Measuring (MOhm)
Channel X	200	200
Channel Y	200	200
Channel Z	200	200

8. Low Battery Alarm Voltage (Typical values for information)

Typical values	Alarm Level (VDC)
Supply (+ Vcc)	+7.9
Supply (- Vcc)	-7.6

9. Power Consumption (Typical values for information)

Typical values	Switched off (mA)	Stand by (mA)	Transmitting (mA)
Supply (+ Vcc)	+0.01	+6	+14
Supply (- Vcc)	–0.01	-8	-9

Calibration Laboratory of
Schmid & Partner
Engineering AG
Zeughausstrasse 43, 8004 Zurich, Switzerland

S Schweizerischer Kalibrierdienst
C Service suisse d'étalonnage
Servizio svizzero di taratura
S Swiss Calibration Service

Accredited by the Swiss Accreditation Service (SAS)
The Swiss Accreditation Service is one of the signatories to the EA Multilateral Agreement for the recognition of calibration certificates

Accreditation No.: SCS 0108

Client **Auden**
Taoyuan City

Certificate No. **EX-7515_Jan25/2**

CALIBRATION CERTIFICATE (Replacement of No: EX-7515_Jan24)

Object	EX3DV4 - SN:7515
Calibration procedure(s)	QA CAL-01.v10, QA CAL-12.v10, QA CAL-14.v7, QA CAL-23.v6, QA CAL-25.v8 Calibration procedure for dosimetric E-field probes
Calibration date	January 07, 2025

This calibration certificate documents the traceability to national standards, which realize the physical units of measurements (SI). The measurements and the uncertainties with confidence probability are given on the following pages and are part of the certificate.

All calibrations have been conducted in the closed laboratory facility: environment temperature (22 ± 3) °C and humidity < 70%.

Calibration Equipment used (M&TE critical for calibration)

Primary Standards	ID	Calibration Date (Certificate No.)	Sched. Cal.
Power Sensor R&S NRP-33T	SN: 100967	28-Mar-24 (No. 217-04038)	Mar-25
Short [S6019i] + Attenuator [S6020i]	SN: L1119	26-Mar-24 (No. 217-04048)	Mar-25
OCP DAK-12	SN: 1016	24-Sept-24 (No. OCP-DAK12-1016_Sep24)	Sep-25
OCP DAK-3.5	SN: 1249	23-Sept-24 (No. OCP-DAK3.5-1249_Sep24)	Sep-25
Reference Probe EX3DV4	SN: 7349	03-Jun-24 (No. EX3-7349_Jun24)	Jun-25
DAE4	SN: 1301	07-Nov-24 (No. DAE4-1301_Nov24)	Nov-25

Secondary Standards	ID	Check Date (in house)	Sched. Check
ACAP 2020 Calibration Box	SN: L1404	30-Sept-24 (No. Report_ACAP2020E-Cave_20240930s)	Sep-25

	Name	Function	Signature
Calibrated by	Jeffrey Katzman	Laboratory Technician	
Approved by	Sven Kühn	Technical Manager	

Issued: January 10, 2025

This calibration certificate shall not be reproduced except in full without written approval of the laboratory.

Glossary

TSL	tissue simulating liquid
NORMx,y,z	sensitivity in free space
ConvF	sensitivity in TSL / NORMx,y,z
DCP	diode compression point
CF	crest factor (1/duty_cycle) of the RF signal
A, B, C, D	modulation dependent linearization parameters
Polarization φ	φ rotation around probe axis
Polarization ϑ	ϑ rotation around an axis that is in the plane normal to probe axis (at measurement center), i.e., $\vartheta = 0$ is normal to probe axis
Connector Angle	information used in DASY system to align probe sensor X to the robot coordinate system

Calibration is Performed According to the Following Standards:

a) IEC/IEEE 62209-1528, "Measurement Procedure For The Assessment Of Specific Absorption Rate Of Human Exposure To Radio Frequency Fields From Hand-Held And Body-Worn Wireless Communication Devices – Part 1528: Human Models, Instrumentation And Procedures (Frequency Range of 4 MHz to 10 GHz)", October 2020.
b) KDB 865664, "SAR Measurement Requirements for 100 MHz to 6 GHz"

Methods Applied and Interpretation of Parameters:

- *NORMx,y,z*: Assessed for E-field polarization $\vartheta = 0$ ($f \leq 900$ MHz in TEM-cell; $f > 1800$ MHz: R22 waveguide). NORMx,y,z are only intermediate values, i.e., the uncertainties of NORMx,y,z does not affect the E^2-field uncertainty inside TSL (see below *ConvF*).
- *NORM(f)x,y,z = NORMx,y,z * frequency_response* (see Frequency Response Chart). This linearization is implemented in DASY4 software versions later than 4.2. The uncertainty of the frequency response is included in the stated uncertainty of ConvF.
- *DCPx,y,z*: DCP are numerical linearization parameters assessed based on the data of power sweep with CW signal. DCP does not depend on frequency nor media.
- *PAR*: PAR is the Peak to Average Ratio that is not calibrated but determined based on the signal characteristics
- *Ax,y,z; Bx,y,z; Cx,y,z; Dx,y,z; VRx,y,z: A, B, C, D* are numerical linearization parameters assessed based on the data of power sweep for specific modulation signal. The parameters do not depend on frequency nor media. VR is the maximum calibration range expressed in RMS voltage across the diode.
- *ConvF and Boundary Effect Parameters*: Assessed in flat phantom using E-field (or Temperature Transfer Standard for $f \leq 800$ MHz) and inside waveguide using analytical field distributions based on power measurements for $f > 800$ MHz. The same setups are used for assessment of the parameters applied for boundary compensation (alpha, depth) of which typical uncertainty values are given. These parameters are used in DASY4 software to improve probe accuracy close to the boundary. The sensitivity in TSL corresponds to *NORMx,y,z * ConvF* whereby the uncertainty corresponds to that given for *ConvF*. A frequency dependent *ConvF* is used in DASY version 4.4 and higher which allows extending the validity from ±50 MHz to ±100 MHz.
- *Spherical isotropy (3D deviation from isotropy)*: in a field of low gradients realized using a flat phantom exposed by a patch antenna.
- *Sensor Offset*: The sensor offset corresponds to the offset of virtual measurement center from the probe tip (on probe axis). No tolerance required.
- *Connector Angle*: The angle is assessed using the information gained by determining the *NORMx* (no uncertainty required).

Parameters of Probe: EX3DV4 - SN:7515

Basic Calibration Parameters

	Sensor X	Sensor Y	Sensor Z	Unc (k = 2)
Norm (μV/(V/m)^2) [A]	0.62	0.56	0.54	±10.1%
DCP (mV) [B]	103.2	106.0	105.4	±4.7%

Calibration Results for Modulation Response

UID	Communication System Name		A dB	B dB$\sqrt{\mu V}$	C	D dB	VR mV	Max dev.	Max Unc[E] k = 2
0	CW	X	0.00	0.00	1.00	0.00	145.6	±2.5%	±4.7%
		Y	0.00	0.00	1.00		149.4		
		Z	0.00	0.00	1.00		133.6		
10352	Pulse Waveform (200Hz, 10%)	X	1.45	60.39	6.42	10.00	60.0	±2.9%	±9.6%
		Y	1.45	60.49	6.47		60.0		
		Z	2.00	62.00	7.00		60.0		
10353	Pulse Waveform (200Hz, 20%)	X	46.00	80.00	11.00	6.99	80.0	±2.2%	±9.6%
		Y	0.82	60.00	5.18		80.0		
		Z	0.82	60.00	5.05		80.0		
10354	Pulse Waveform (200Hz, 40%)	X	0.04	127.45	0.73	3.98	95.0	±2.4%	±9.6%
		Y	64.00	78.00	9.00		95.0		
		Z	2.00	64.00	5.00		95.0		
10355	Pulse Waveform (200Hz, 60%)	X	9.91	122.14	3.32	2.22	120.0	±1.5%	±9.6%
		Y	10.69	156.34	9.96		120.0		
		Z	10.76	94.92	0.06		120.0		
10387	QPSK Waveform, 1 MHz	X	0.72	67.11	14.63	1.00	150.0	±3.1%	±9.6%
		Y	0.51	63.45	12.55		150.0		
		Z	0.62	66.61	14.68		150.0		
10388	QPSK Waveform, 10 MHz	X	1.53	67.68	15.04	0.00	150.0	±1.1%	±9.6%
		Y	1.30	66.03	13.91		150.0		
		Z	1.48	68.15	15.16		150.0		
10396	64-QAM Waveform, 100 kHz	X	1.66	64.29	16.06	3.01	150.0	±0.9%	±9.6%
		Y	1.68	64.28	15.55		150.0		
		Z	1.74	65.01	16.06		150.0		
10399	64-QAM Waveform, 40 MHz	X	2.86	66.34	15.31	0.00	150.0	±1.3%	±9.6%
		Y	2.78	66.32	15.13		150.0		
		Z	2.88	67.01	15.58		150.0		
10414	WLAN CCDF, 64-QAM, 40 MHz	X	3.97	66.54	15.68	0.00	150.0	±2.2%	±9.6%
		Y	3.71	65.96	15.22		150.0		
		Z	3.80	66.47	15.55		150.0		

Note: For details on UID parameters see Appendix

The reported uncertainty of measurement is stated as the standard uncertainty of measurement multiplied by the coverage factor k=2, which for a normal distribution corresponds to a coverage probability of approximately 95%.

[A] The uncertainties of Norm X,Y,Z do not affect the E^2-field uncertainty inside TSL (see Pages 5 and 6).
[B] Linearization parameter uncertainty for maximum specified field strength.
[E] Uncertainty is determined using the max. deviation from linear response applying rectangular distribution and is expressed for the square of the field value.

Parameters of Probe: EX3DV4 - SN:7515

Sensor Model Parameters

	C1 fF	C2 fF	α V^{-1}	T1 $ms\,V^{-2}$	T2 $ms\,V^{-1}$	T3 ms	T4 V^{-2}	T5 V^{-1}	T6
x	9.7	71.35	34.43	1.53	0.00	4.90	0.21	0.00	1.00
y	8.8	63.35	33.35	4.55	0.00	4.92	0.60	0.00	1.00
z	8.7	62.27	33.01	4.04	0.00	4.90	0.60	0.00	1.00

Other Probe Parameters

Sensor Arrangement	Triangular
Connector Angle	-50.5°
Mechanical Surface Detection Mode	enabled
Optical Surface Detection Mode	disabled
Probe Overall Length	337 mm
Probe Body Diameter	10 mm
Tip Length	9 mm
Tip Diameter	2.5 mm
Probe Tip to Sensor X Calibration Point	1 mm
Probe Tip to Sensor Y Calibration Point	1 mm
Probe Tip to Sensor Z Calibration Point	1 mm
Recommended Measurement Distance from Surface	1.4 mm

Note: Measurement distance from surface can be increased to 3–4 mm for an *Area Scan* job.

Parameters of Probe: EX3DV4 - SN:7515

Calibration Parameter Determined in Head Tissue Simulating Media

f (MHz)[C]	Relative Permittivity[F]	Conductivity[F] (S/m)	ConvF X	ConvF Y	ConvF Z	Alpha[G]	Depth[G] (mm)	Unc[H] ($k = 2$)
750	41.9	0.89	9.02	8.88	9.28	0.38	1.27	±11.0%
835	41.5	0.90	8.66	8.52	8.91	0.38	1.27	±11.0%
900	41.5	0.97	8.55	8.41	8.79	0.38	1.27	±11.0%
1750	40.1	1.37	7.65	7.52	7.86	0.37	1.27	±11.0%
1900	40.0	1.40	7.41	7.29	7.62	0.37	1.27	±11.0%
2000	40.0	1.40	7.18	7.06	7.38	0.37	1.27	±11.0%
2300	39.5	1.67	7.13	7.02	7.34	0.37	1.27	±11.0%
2450	39.2	1.80	6.95	6.84	7.15	0.37	1.27	±11.0%
2600	39.0	1.96	6.82	6.71	7.01	0.37	1.27	±11.0%
3300	38.2	2.71	6.49	6.38	6.67	0.36	1.27	±13.1%
3500	37.9	2.91	6.37	6.27	6.56	0.36	1.27	±13.1%
3700	37.7	3.12	6.19	6.09	6.37	0.36	1.27	±13.1%
3900	37.5	3.32	6.43	6.33	6.62	0.36	1.27	±13.1%
4100	37.2	3.53	6.31	6.21	6.49	0.36	1.27	±13.1%
4200	37.1	3.63	6.08	5.98	6.25	0.36	1.27	±13.1%
4400	36.9	3.84	5.97	5.87	6.14	0.35	1.27	±13.1%
4600	36.7	4.04	5.82	5.72	5.98	0.35	1.27	±13.1%
4800	36.4	4.25	6.00	5.90	6.17	0.35	1.27	±13.1%
4950	36.3	4.40	5.72	5.63	5.88	0.34	1.27	±13.1%
5250	35.9	4.71	5.29	5.21	5.45	0.31	1.27	±13.1%
5600	35.5	5.07	4.97	4.89	5.11	0.28	1.27	±13.1%
5800	35.3	5.27	4.82	4.75	4.96	0.26	1.27	±13.1%

[C] Frequency validity above 300 MHz of ±100 MHz only applies for DASY v4.4 and higher (see Page 2), else it is restricted to ±50 MHz. The uncertainty is the RSS of the ConvF uncertainty at calibration frequency and the uncertainty for the indicated frequency band. Frequency validity below 300 MHz is ±10, 25, 40, 50 and 70 MHz for ConvF assessments at 30, 64, 128, 150 and 220 MHz respectively. Validity of ConvF assessed at 6 MHz is 4–9 MHz, and ConvF assessed at 13 MHz is 9–19 MHz. Above 5 GHz frequency validity can be extended to ±110 MHz.

[F] The probes are calibrated using tissue simulating liquids (TSL) that deviate for ε and σ by less than ±5% from the target values (typically better than ±3%) and are valid for TSL with deviations of up to ±10% if SAR correction is applied.

[G] Alpha/Depth are determined during calibration. SPEAG warrants that the remaining deviation due to the boundary effect after compensation is always less than ±1% for frequencies below 3 GHz and below ±2% for frequencies between 3–6 GHz at any distance larger than half the probe tip diameter from the boundary.

[H] The stated uncertainty is the total calibration uncertainty ($k = 2$) of Norm·ConvF. This is equivalent to the uncertainty component with the symbol CF in Table 9 of IEC/IEEE 62209-1528:2020.

Parameters of Probe: EX3DV4 - SN:7515

Calibration Parameter Determined in Head Tissue Simulating Media

f (MHz)[C]	Relative Permittivity[F]	Conductivity[F] (S/m)	ConvF X	ConvF Y	ConvF Z	Alpha[G]	Depth[G] (mm)	Unc[H] ($k = 2$)
6500	34.5	6.07	5.35	5.26	5.50	0.20	1.27	±18.6%

[C] Frequency validity at 6.5 GHz is −600/+700 MHz, and ±700 MHz at or above 7 GHz. The uncertainty is the RSS of the ConvF uncertainty at calibration frequency and the uncertainty for the indicated frequency band.
[F] The probes are calibrated using tissue simulating liquids (TSL) that deviate for ε and σ by less than ±10% from the target values (typically better than ±6%) and are valid for TSL with deviations of up to ±10%.
[G] Alpha/Depth are determined during calibration. SPEAG warrants that the remaining deviation due to the boundary effect after compensation is always less than ±1% for frequencies below 3 GHz; below ±2% for frequencies between 3–6 GHz; and below ±4% for frequencies between 6–10 GHz at any distance larger than half the probe tip diameter from the boundary.
[H] The stated uncertainty is the total calibration uncertainty ($k = 2$) of Norm·ConvF. This is equivalent to the uncertainty component with the symbol CF in Table 9 of IEC/IEEE 62209-1528:2020.

Frequency Response of E-Field

(TEM-Cell:ifi110 EXX, Waveguide:R22)

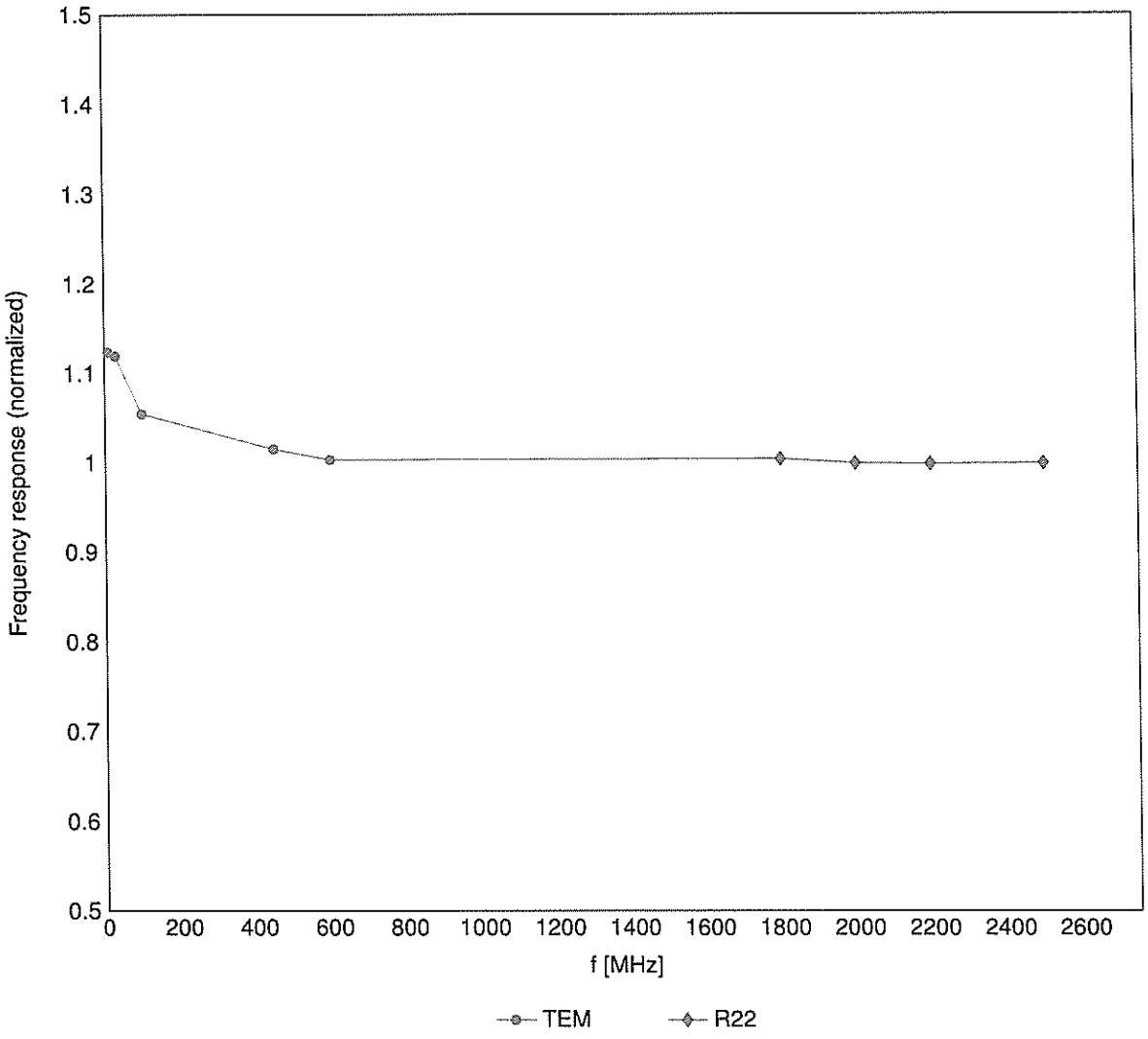

Uncertainty of Frequency Response of E-field: ±6.3% (k=2)

Receiving Pattern (ϕ), $\vartheta = 0°$

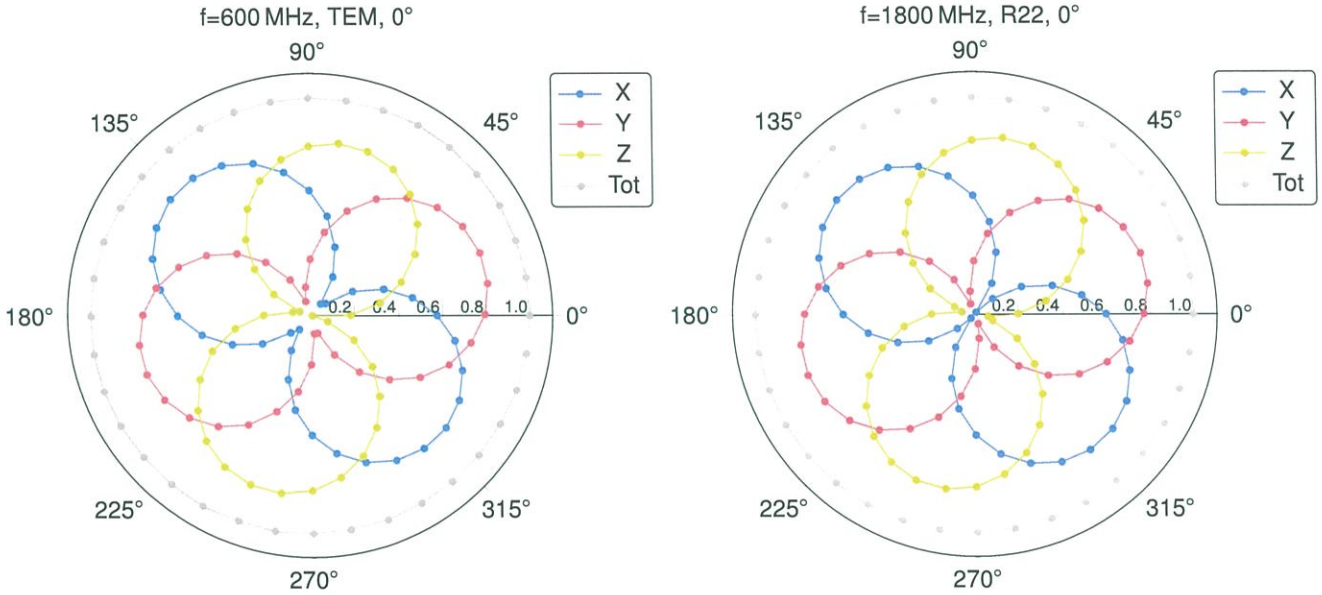

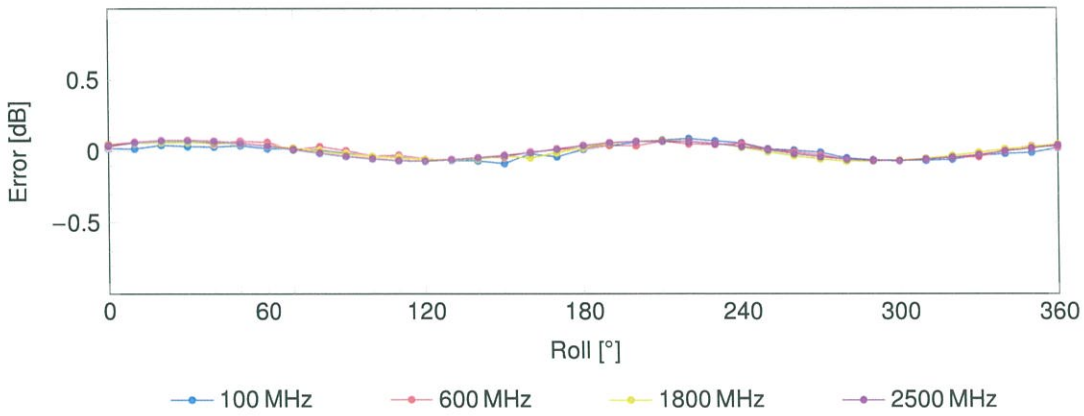

Uncertainty of Axial Isotropy Assessment: ±0.5% (k=2)

Dynamic Range f(SAR_{head})

(TEM cell, f_{eval} = 1900 MHz)

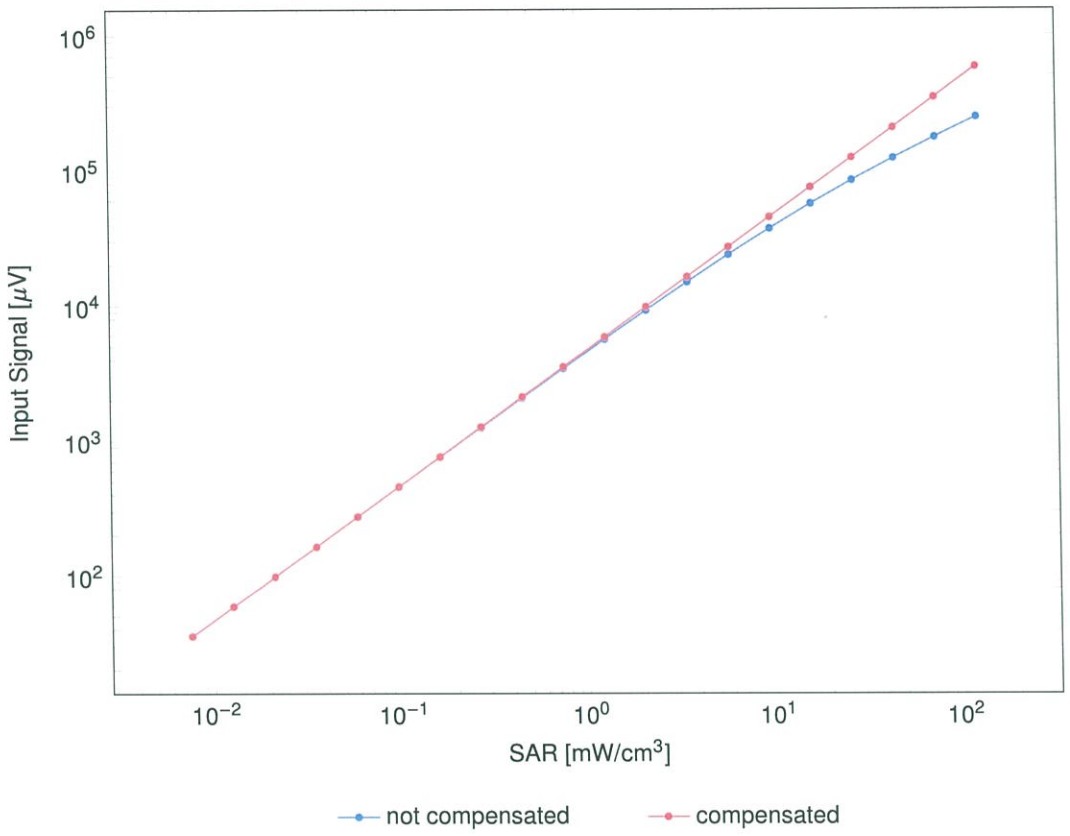

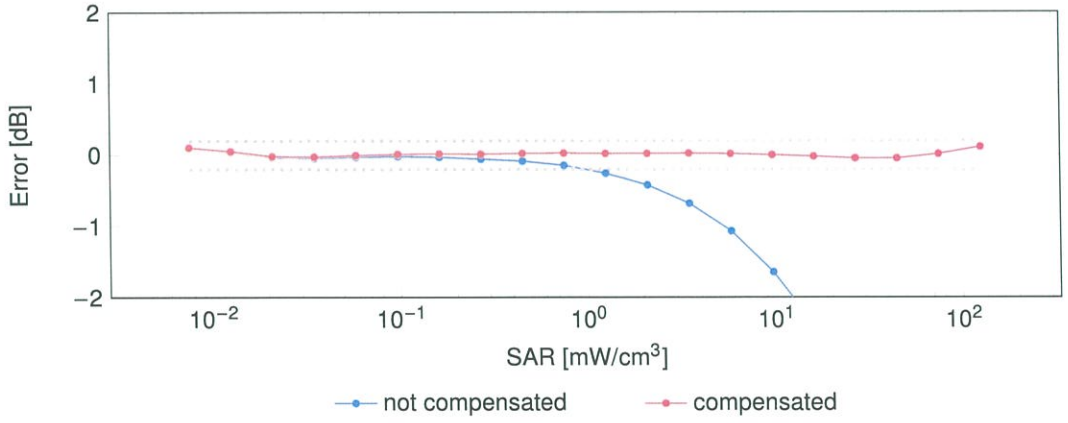

Uncertainty of Linearity Assessment: ±0.6% (k=2)

Conversion Factor Assessment

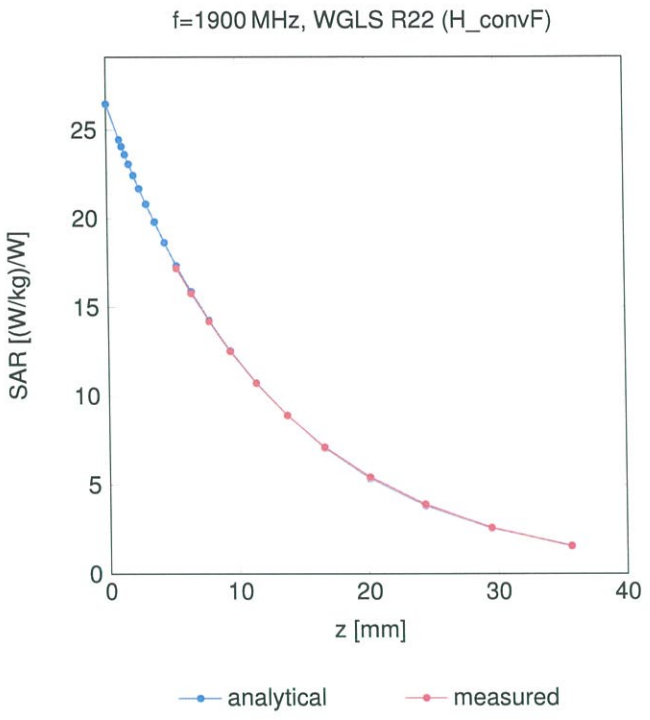

Deviation from Isotropy in Liquid

Error (ϕ,θ), f = 900 MHz

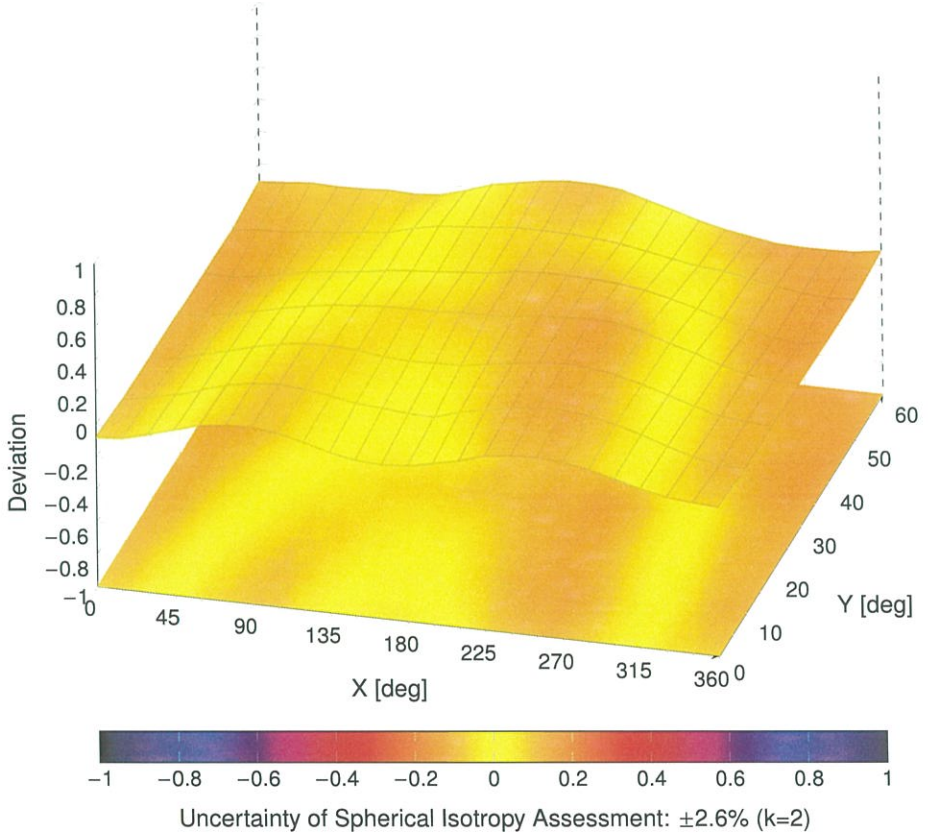

Uncertainty of Spherical Isotropy Assessment: ±2.6% (k=2)

Appendix: Modulation Calibration Parameters

UID	Rev	Communication System Name	Group	PAR (dB)	Unc^E $k = 2$
0		CW	CW	0.00	±4.7
10010	CAB	SAR Validation (Square, 100 ms, 10 ms)	Test	10.00	±9.6
10011	CAC	UMTS-FDD (WCDMA)	WCDMA	2.91	±9.6
10012	CAB	IEEE 802.11b WiFi 2.4 GHz (DSSS, 1 Mbps)	WLAN	1.87	±9.6
10013	CAB	IEEE 802.11g WiFi 2.4 GHz (DSSS-OFDM, 6 Mbps)	WLAN	9.46	±9.6
10021	DAC	GSM-FDD (TDMA, GMSK)	GSM	9.39	±9.6
10023	DAC	GPRS-FDD (TDMA, GMSK, TN 0)	GSM	9.57	±9.6
10024	DAC	GPRS-FDD (TDMA, GMSK, TN 0-1)	GSM	6.56	±9.6
10025	DAC	EDGE-FDD (TDMA, 8PSK, TN 0)	GSM	12.62	±9.6
10026	DAC	EDGE-FDD (TDMA, 8PSK, TN 0-1)	GSM	9.55	±9.6
10027	DAC	GPRS-FDD (TDMA, GMSK, TN 0-1-2)	GSM	4.80	±9.6
10028	DAC	GPRS-FDD (TDMA, GMSK, TN 0-1-2-3)	GSM	3.55	±9.6
10029	DAC	EDGE-FDD (TDMA, 8PSK, TN 0-1-2)	GSM	7.78	±9.6
10030	CAA	IEEE 802.15.1 Bluetooth (GFSK, DH1)	Bluetooth	5.30	±9.6
10031	CAA	IEEE 802.15.1 Bluetooth (GFSK, DH3)	Bluetooth	1.87	±9.6
10032	CAA	IEEE 802.15.1 Bluetooth (GFSK, DH5)	Bluetooth	1.16	±9.6
10033	CAA	IEEE 802.15.1 Bluetooth (PI/4-DQPSK, DH1)	Bluetooth	7.74	±9.6
10034	CAA	IEEE 802.15.1 Bluetooth (PI/4-DQPSK, DH3)	Bluetooth	4.53	±9.6
10035	CAA	IEEE 802.15.1 Bluetooth (PI/4-DQPSK, DH5)	Bluetooth	3.83	±9.6
10036	CAA	IEEE 802.15.1 Bluetooth (8-DPSK, DH1)	Bluetooth	8.01	±9.6
10037	CAA	IEEE 802.15.1 Bluetooth (8-DPSK, DH3)	Bluetooth	4.77	±9.6
10038	CAA	IEEE 802.15.1 Bluetooth (8-DPSK, DH5)	Bluetooth	4.10	±9.6
10039	CAB	CDMA2000 (1xRTT, RC1)	CDMA2000	4.57	±9.6
10042	CAB	IS-54 / IS-136 FDD (TDMA/FDM, PI/4-DQPSK, Halfrate)	AMPS	7.78	±9.6
10044	CAA	IS-91/EIA/TIA-553 FDD (FDMA, FM)	AMPS	0.00	±9.6
10048	CAA	DECT (TDD, TDMA/FDM, GFSK, Full Slot, 24)	DECT	13.80	±9.6
10049	CAA	DECT (TDD, TDMA/FDM, GFSK, Double Slot, 12)	DECT	10.79	±9.6
10056	CAA	UMTS-TDD (TD-SCDMA, 1.28 Mcps)	TD-SCDMA	11.01	±9.6
10058	DAC	EDGE-FDD (TDMA, 8PSK, TN 0-1-2-3)	GSM	6.52	±9.6
10059	CAB	IEEE 802.11b WiFi 2.4 GHz (DSSS, 2 Mbps)	WLAN	2.12	±9.6
10060	CAB	IEEE 802.11b WiFi 2.4 GHz (DSSS, 5.5 Mbps)	WLAN	2.83	±9.6
10061	CAB	IEEE 802.11b WiFi 2.4 GHz (DSSS, 11 Mbps)	WLAN	3.60	±9.6
10062	CAE	IEEE 802.11a/h WiFi 5 GHz (OFDM, 6 Mbps)	WLAN	8.68	±9.6
10063	CAE	IEEE 802.11a/h WiFi 5 GHz (OFDM, 9 Mbps)	WLAN	8.63	±9.6
10064	CAE	IEEE 802.11a/h WiFi 5 GHz (OFDM, 12 Mbps)	WLAN	9.09	±9.6
10065	CAE	IEEE 802.11a/h WiFi 5 GHz (OFDM, 18 Mbps)	WLAN	9.00	±9.6
10066	CAE	IEEE 802.11a/h WiFi 5 GHz (OFDM, 24 Mbps)	WLAN	9.38	±9.6
10067	CAE	IEEE 802.11a/h WiFi 5 GHz (OFDM, 36 Mbps)	WLAN	10.12	±9.6
10068	CAE	IEEE 802.11a/h WiFi 5 GHz (OFDM, 48 Mbps)	WLAN	10.24	±9.6
10069	CAE	IEEE 802.11a/h WiFi 5 GHz (OFDM, 54 Mbps)	WLAN	10.56	±9.6
10071	CAB	IEEE 802.11g WiFi 2.4 GHz (DSSS/OFDM, 9 Mbps)	WLAN	9.83	±9.6
10072	CAB	IEEE 802.11g WiFi 2.4 GHz (DSSS/OFDM, 12 Mbps)	WLAN	9.62	±9.6
10073	CAB	IEEE 802.11g WiFi 2.4 GHz (DSSS/OFDM, 18 Mbps)	WLAN	9.94	±9.6
10074	CAB	IEEE 802.11g WiFi 2.4 GHz (DSSS/OFDM, 24 Mbps)	WLAN	10.30	±9.6
10075	CAB	IEEE 802.11g WiFi 2.4 GHz (DSSS/OFDM, 36 Mbps)	WLAN	10.77	±9.6
10076	CAB	IEEE 802.11g WiFi 2.4 GHz (DSSS/OFDM, 48 Mbps)	WLAN	10.94	±9.6
10077	CAB	IEEE 802.11g WiFi 2.4 GHz (DSSS/OFDM, 54 Mbps)	WLAN	11.00	±9.6
10081	CAB	CDMA2000 (1xRTT, RC3)	CDMA2000	3.97	±9.6
10082	CAB	IS-54 / IS-136 FDD (TDMA/FDM, PI/4-DQPSK, Fullrate)	AMPS	4.77	±9.6
10090	DAC	GPRS-FDD (TDMA, GMSK, TN 0-4)	GSM	6.56	±9.6
10097	CAC	UMTS-FDD (HSDPA)	WCDMA	3.98	±9.6
10098	CAC	UMTS-FDD (HSUPA, Subtest 2)	WCDMA	3.98	±9.6
10099	DAC	EDGE-FDD (TDMA, 8PSK, TN 0-4)	GSM	9.55	±9.6
10100	CAF	LTE-FDD (SC-FDMA, 100% RB, 20 MHz, QPSK)	LTE-FDD	5.67	±9.6
10101	CAF	LTE-FDD (SC-FDMA, 100% RB, 20 MHz, 16-QAM)	LTE-FDD	6.42	±9.6
10102	CAF	LTE-FDD (SC-FDMA, 100% RB, 20 MHz, 64-QAM)	LTE-FDD	6.60	±9.6
10103	CAH	LTE-TDD (SC-FDMA, 100% RB, 20 MHz, QPSK)	LTE-TDD	9.29	±9.6
10104	CAH	LTE-TDD (SC-FDMA, 100% RB, 20 MHz, 16-QAM)	LTE-TDD	9.97	±9.6
10105	CAH	LTE-TDD (SC-FDMA, 100% RB, 20 MHz, 64-QAM)	LTE-TDD	10.01	±9.6
10108	CAH	LTE-FDD (SC-FDMA, 100% RB, 10 MHz, QPSK)	LTE-FDD	5.80	±9.6
10109	CAH	LTE-FDD (SC-FDMA, 100% RB, 10 MHz, 16-QAM)	LTE-FDD	6.43	±9.6
10110	CAH	LTE-FDD (SC-FDMA, 100% RB, 5 MHz, QPSK)	LTE-FDD	5.75	±9.6
10111	CAH	LTE-FDD (SC-FDMA, 100% RB, 5 MHz, 16-QAM)	LTE-FDD	6.44	±9.6

UID	Rev	Communication System Name	Group	PAR (dB)	Unc^E $k = 2$
10112	CAH	LTE-FDD (SC-FDMA, 100% RB, 10 MHz, 64-QAM)	LTE-FDD	6.59	±9.6
10113	CAH	LTE-FDD (SC-FDMA, 100% RB, 5 MHz, 64-QAM)	LTE-FDD	6.62	±9.6
10114	CAE	IEEE 802.11n (HT Greenfield, 13.5 Mbps, BPSK)	WLAN	8.10	±9.6
10115	CAE	IEEE 802.11n (HT Greenfield, 81 Mbps, 16-QAM)	WLAN	8.46	±9.6
10116	CAE	IEEE 802.11n (HT Greenfield, 135 Mbps, 64-QAM)	WLAN	8.15	±9.6
10117	CAE	IEEE 802.11n (HT Mixed, 13.5 Mbps, BPSK)	WLAN	8.07	±9.6
10118	CAE	IEEE 802.11n (HT Mixed, 81 Mbps, 16-QAM)	WLAN	8.59	±9.6
10119	CAE	IEEE 802.11n (HT Mixed, 135 Mbps, 64-QAM)	WLAN	8.13	±9.6
10140	CAF	LTE-FDD (SC-FDMA, 100% RB, 15 MHz, 16-QAM)	LTE-FDD	6.49	±9.6
10141	CAF	LTE-FDD (SC-FDMA, 100% RB, 15 MHz, 64-QAM)	LTE-FDD	6.53	±9.6
10142	CAF	LTE-FDD (SC-FDMA, 100% RB, 3 MHz, QPSK)	LTE-FDD	5.73	±9.6
10143	CAF	LTE-FDD (SC-FDMA, 100% RB, 3 MHz, 16-QAM)	LTE-FDD	6.35	±9.6
10144	CAF	LTE-FDD (SC-FDMA, 100% RB, 3 MHz, 64-QAM)	LTE-FDD	6.65	±9.6
10145	CAG	LTE-FDD (SC-FDMA, 100% RB, 1.4 MHz, QPSK)	LTE-FDD	5.76	±9.6
10146	CAG	LTE-FDD (SC-FDMA, 100% RB, 1.4 MHz, 16-QAM)	LTE-FDD	6.41	±9.6
10147	CAG	LTE-FDD (SC-FDMA, 100% RB, 1.4 MHz, 64-QAM)	LTE-FDD	6.72	±9.6
10149	CAF	LTE-FDD (SC-FDMA, 50% RB, 20 MHz, 16-QAM)	LTE-FDD	6.42	±9.6
10150	CAF	LTE-FDD (SC-FDMA, 50% RB, 20 MHz, 64-QAM)	LTE-FDD	6.60	±9.6
10151	CAH	LTE-TDD (SC-FDMA, 50% RB, 20 MHz, QPSK)	LTE-TDD	9.28	±9.6
10152	CAH	LTE-TDD (SC-FDMA, 50% RB, 20 MHz, 16-QAM)	LTE-TDD	9.92	±9.6
10153	CAH	LTE-TDD (SC-FDMA, 50% RB, 20 MHz, 64-QAM)	LTE-TDD	10.05	±9.6
10154	CAH	LTE-FDD (SC-FDMA, 50% RB, 10 MHz, QPSK)	LTE-FDD	5.75	±9.6
10155	CAH	LTE-FDD (SC-FDMA, 50% RB, 10 MHz, 16-QAM)	LTE-FDD	6.43	±9.6
10156	CAH	LTE-FDD (SC-FDMA, 50% RB, 5 MHz, QPSK)	LTE-FDD	5.79	±9.6
10157	CAH	LTE-FDD (SC-FDMA, 50% RB, 5 MHz, 16-QAM)	LTE-FDD	6.49	±9.6
10158	CAH	LTE-FDD (SC-FDMA, 50% RB, 10 MHz, 64-QAM)	LTE-FDD	6.62	±9.6
10159	CAH	LTE-FDD (SC-FDMA, 50% RB, 5 MHz, 64-QAM)	LTE-FDD	6.56	±9.6
10160	CAF	LTE-FDD (SC-FDMA, 50% RB, 15 MHz, QPSK)	LTE-FDD	5.82	±9.6
10161	CAF	LTE-FDD (SC-FDMA, 50% RB, 15 MHz, 16-QAM)	LTE-FDD	6.43	±9.6
10162	CAF	LTE-FDD (SC-FDMA, 50% RB, 15 MHz, 64-QAM)	LTE-FDD	6.58	±9.6
10166	CAG	LTE-FDD (SC-FDMA, 50% RB, 1.4 MHz, QPSK)	LTE-FDD	5.46	±9.6
10167	CAG	LTE-FDD (SC-FDMA, 50% RB, 1.4 MHz, 16-QAM)	LTE-FDD	6.21	±9.6
10168	CAG	LTE-FDD (SC-FDMA, 50% RB, 1.4 MHz, 64-QAM)	LTE-FDD	6.79	±9.6
10169	CAF	LTE-FDD (SC-FDMA, 1 RB, 20 MHz, QPSK)	LTE-FDD	5.73	±9.6
10170	CAF	LTE-FDD (SC-FDMA, 1 RB, 20 MHz, 16-QAM)	LTE-FDD	6.52	±9.6
10171	AAF	LTE-FDD (SC-FDMA, 1 RB, 20 MHz, 64-QAM)	LTE-FDD	6.49	±9.6
10172	CAH	LTE-TDD (SC-FDMA, 1 RB, 20 MHz, QPSK)	LTE-TDD	9.21	±9.6
10173	CAH	LTE-TDD (SC-FDMA, 1 RB, 20 MHz, 16-QAM)	LTE-TDD	9.48	±9.6
10174	CAH	LTE-TDD (SC-FDMA, 1 RB, 20 MHz, 64-QAM)	LTE-TDD	10.25	±9.6
10175	CAH	LTE-FDD (SC-FDMA, 1 RB, 10 MHz, QPSK)	LTE-FDD	5.72	±9.6
10176	CAH	LTE-FDD (SC-FDMA, 1 RB, 10 MHz, 16-QAM)	LTE-FDD	6.52	±9.6
10177	CAJ	LTE-FDD (SC-FDMA, 1 RB, 5 MHz, QPSK)	LTE-FDD	5.73	±9.6
10178	CAH	LTE-FDD (SC-FDMA, 1 RB, 5 MHz, 16-QAM)	LTE-FDD	6.52	±9.6
10179	CAH	LTE-FDD (SC-FDMA, 1 RB, 10 MHz, 64-QAM)	LTE-FDD	6.50	±9.6
10180	CAH	LTE-FDD (SC-FDMA, 1 RB, 5 MHz, 64-QAM)	LTE-FDD	6.50	±9.6
10181	CAF	LTE-FDD (SC-FDMA, 1 RB, 15 MHz, QPSK)	LTE-FDD	5.72	±9.6
10182	CAF	LTE-FDD (SC-FDMA, 1 RB, 15 MHz, 16-QAM)	LTE-FDD	6.52	±9.6
10183	AAE	LTE-FDD (SC-FDMA, 1 RB, 15 MHz, 64-QAM)	LTE-FDD	6.50	±9.6
10184	CAF	LTE-FDD (SC-FDMA, 1 RB, 3 MHz, QPSK)	LTE-FDD	5.73	±9.6
10185	CAF	LTE-FDD (SC-FDMA, 1 RB, 3 MHz, 16-QAM)	LTE-FDD	6.51	±9.6
10186	AAF	LTE-FDD (SC-FDMA, 1 RB, 3 MHz, 64-QAM)	LTE-FDD	6.50	±9.6
10187	CAG	LTE-FDD (SC-FDMA, 1 RB, 1.4 MHz, QPSK)	LTE-FDD	5.73	±9.6
10188	CAG	LTE-FDD (SC-FDMA, 1 RB, 1.4 MHz, 16-QAM)	LTE-FDD	6.52	±9.6
10189	AAG	LTE-FDD (SC-FDMA, 1 RB, 1.4 MHz, 64-QAM)	LTE-FDD	6.50	±9.6
10193	CAE	IEEE 802.11n (HT Greenfield, 6.5 Mbps, BPSK)	WLAN	8.09	±9.6
10194	CAE	IEEE 802.11n (HT Greenfield, 39 Mbps, 16-QAM)	WLAN	8.12	±9.6
10195	CAE	IEEE 802.11n (HT Greenfield, 65 Mbps, 64-QAM)	WLAN	8.21	±9.6
10196	CAE	IEEE 802.11n (HT Mixed, 6.5 Mbps, BPSK)	WLAN	8.10	±9.6
10197	CAE	IEEE 802.11n (HT Mixed, 39 Mbps, 16-QAM)	WLAN	8.13	±9.6
10198	CAE	IEEE 802.11n (HT Mixed, 65 Mbps, 64-QAM)	WLAN	8.27	±9.6
10219	CAE	IEEE 802.11n (HT Mixed, 7.2 Mbps, BPSK)	WLAN	8.03	±9.6
10220	CAE	IEEE 802.11n (HT Mixed, 43.3 Mbps, 16-QAM)	WLAN	8.13	±9.6
10221	CAE	IEEE 802.11n (HT Mixed, 72.2 Mbps, 64-QAM)	WLAN	8.27	±9.6
10222	CAE	IEEE 802.11n (HT Mixed, 15 Mbps, BPSK)	WLAN	8.06	±9.6
10223	CAE	IEEE 802.11n (HT Mixed, 90 Mbps, 16-QAM)	WLAN	8.48	±9.6
10224	CAE	IEEE 802.11n (HT Mixed, 150 Mbps, 64-QAM)	WLAN	8.08	±9.6

UID	Rev	Communication System Name	Group	PAR (dB)	Unc^E $k = 2$
10225	CAC	UMTS-FDD (HSPA+)	WCDMA	5.97	±9.6
10226	CAC	LTE-TDD (SC-FDMA, 1 RB, 1.4 MHz, 16-QAM)	LTE-TDD	9.49	±9.6
10227	CAC	LTE-TDD (SC-FDMA, 1 RB, 1.4 MHz, 64-QAM)	LTE-TDD	10.26	±9.6
10228	CAC	LTE-TDD (SC-FDMA, 1 RB, 1.4 MHz, QPSK)	LTE-TDD	9.22	±9.6
10229	CAE	LTE-TDD (SC-FDMA, 1 RB, 3 MHz, 16-QAM)	LTE-TDD	9.48	±9.6
10230	CAE	LTE-TDD (SC-FDMA, 1 RB, 3 MHz, 64-QAM)	LTE-TDD	10.25	±9.6
10231	CAE	LTE-TDD (SC-FDMA, 1 RB, 3 MHz, QPSK)	LTE-TDD	9.19	±9.6
10232	CAH	LTE-TDD (SC-FDMA, 1 RB, 5 MHz, 16-QAM)	LTE-TDD	9.48	±9.6
10233	CAH	LTE-TDD (SC-FDMA, 1 RB, 5 MHz, 64-QAM)	LTE-TDD	10.25	±9.6
10234	CAH	LTE-TDD (SC-FDMA, 1 RB, 5 MHz, QPSK)	LTE-TDD	9.21	±9.6
10235	CAH	LTE-TDD (SC-FDMA, 1 RB, 10 MHz, 16-QAM)	LTE-TDD	9.48	±9.6
10236	CAH	LTE-TDD (SC-FDMA, 1 RB, 10 MHz, 64-QAM)	LTE-TDD	10.25	±9.6
10237	CAH	LTE-TDD (SC-FDMA, 1 RB, 10 MHz, QPSK)	LTE-TDD	9.21	±9.6
10238	CAG	LTE-TDD (SC-FDMA, 1 RB, 15 MHz, 16-QAM)	LTE-TDD	9.48	±9.6
10239	CAG	LTE-TDD (SC-FDMA, 1 RB, 15 MHz, 64-QAM)	LTE-TDD	10.25	±9.6
10240	CAG	LTE-TDD (SC-FDMA, 1 RB, 15 MHz, QPSK)	LTE-TDD	9.21	±9.6
10241	CAC	LTE-TDD (SC-FDMA, 50% RB, 1.4 MHz, 16-QAM)	LTE-TDD	9.82	±9.6
10242	CAC	LTE-TDD (SC-FDMA, 50% RB, 1.4 MHz, 64-QAM)	LTE-TDD	9.86	±9.6
10243	CAC	LTE-TDD (SC-FDMA, 50% RB, 1.4 MHz, QPSK)	LTE-TDD	9.46	±9.6
10244	CAE	LTE-TDD (SC-FDMA, 50% RB, 3 MHz, 16-QAM)	LTE-TDD	10.06	±9.6
10245	CAE	LTE-TDD (SC-FDMA, 50% RB, 3 MHz, 64-QAM)	LTE-TDD	10.06	±9.6
10246	CAE	LTE-TDD (SC-FDMA, 50% RB, 3 MHz, QPSK)	LTE-TDD	9.30	±9.6
10247	CAH	LTE-TDD (SC-FDMA, 50% RB, 5 MHz, 16-QAM)	LTE-TDD	9.91	±9.6
10248	CAH	LTE-TDD (SC-FDMA, 50% RB, 5 MHz, 64-QAM)	LTE-TDD	10.09	±9.6
10249	CAH	LTE-TDD (SC-FDMA, 50% RB, 5 MHz, QPSK)	LTE-TDD	9.29	±9.6
10250	CAH	LTE-TDD (SC-FDMA, 50% RB, 10 MHz, 16-QAM)	LTE-TDD	9.81	±9.6
10251	CAH	LTE-TDD (SC-FDMA, 50% RB, 10 MHz, 64-QAM)	LTE-TDD	10.17	±9.6
10252	CAH	LTE-TDD (SC-FDMA, 50% RB, 10 MHz, QPSK)	LTE-TDD	9.24	±9.6
10253	CAG	LTE-TDD (SC-FDMA, 50% RB, 15 MHz, 16-QAM)	LTE-TDD	9.90	±9.6
10254	CAG	LTE-TDD (SC-FDMA, 50% RB, 15 MHz, 64-QAM)	LTE-TDD	10.14	±9.6
10255	CAG	LTE-TDD (SC-FDMA, 50% RB, 15 MHz, QPSK)	LTE-TDD	9.20	±9.6
10256	CAC	LTE-TDD (SC-FDMA, 100% RB, 1.4 MHz, 16-QAM)	LTE-TDD	9.96	±9.6
10257	CAC	LTE-TDD (SC-FDMA, 100% RB, 1.4 MHz, 64-QAM)	LTE-TDD	10.08	±9.6
10258	CAC	LTE-TDD (SC-FDMA, 100% RB, 1.4 MHz, QPSK)	LTE-TDD	9.34	±9.6
10259	CAE	LTE-TDD (SC-FDMA, 100% RB, 3 MHz, 16-QAM)	LTE-TDD	9.98	±9.6
10260	CAE	LTE-TDD (SC-FDMA, 100% RB, 3 MHz, 64-QAM)	LTE-TDD	9.97	±9.6
10261	CAE	LTE-TDD (SC-FDMA, 100% RB, 3 MHz, QPSK)	LTE-TDD	9.24	±9.6
10262	CAH	LTE-TDD (SC-FDMA, 100% RB, 5 MHz, 16-QAM)	LTE-TDD	9.83	±9.6
10263	CAH	LTE-TDD (SC-FDMA, 100% RB, 5 MHz, 64-QAM)	LTE-TDD	10.16	±9.6
10264	CAH	LTE-TDD (SC-FDMA, 100% RB, 5 MHz, QPSK)	LTE-TDD	9.23	±9.6
10265	CAH	LTE-TDD (SC-FDMA, 100% RB, 10 MHz, 16-QAM)	LTE-TDD	9.92	±9.6
10266	CAH	LTE-TDD (SC-FDMA, 100% RB, 10 MHz, 64-QAM)	LTE-TDD	10.07	±9.6
10267	CAH	LTE-TDD (SC-FDMA, 100% RB, 10 MHz, QPSK)	LTE-TDD	9.30	±9.6
10268	CAG	LTE-TDD (SC-FDMA, 100% RB, 15 MHz, 16-QAM)	LTE-TDD	10.06	±9.6
10269	CAG	LTE-TDD (SC-FDMA, 100% RB, 15 MHz, 64-QAM)	LTE-TDD	10.13	±9.6
10270	CAG	LTE-TDD (SC-FDMA, 100% RB, 15 MHz, QPSK)	LTE-TDD	9.58	±9.6
10274	CAC	UMTS-FDD (HSUPA, Subtest 5, 3GPP Rel8.10)	WCDMA	4.87	±9.6
10275	CAC	UMTS-FDD (HSUPA, Subtest 5, 3GPP Rel8.4)	WCDMA	3.96	±9.6
10277	CAA	PHS (QPSK)	PHS	11.81	±9.6
10278	CAA	PHS (QPSK, BW 884 MHz, Rolloff 0.5)	PHS	11.81	±9.6
10279	CAA	PHS (QPSK, BW 884 MHz, Rolloff 0.38)	PHS	12.18	±9.6
10290	AAB	CDMA2000, RC1, SO55, Full Rate	CDMA2000	3.91	±9.6
10291	AAB	CDMA2000, RC3, SO55, Full Rate	CDMA2000	3.46	±9.6
10292	AAB	CDMA2000, RC3, SO32, Full Rate	CDMA2000	3.39	±9.6
10293	AAB	CDMA2000, RC3, SO3, Full Rate	CDMA2000	3.50	±9.6
10295	AAB	CDMA2000, RC1, SO3, 1/8th Rate 25 fr.	CDMA2000	12.49	±9.6
10297	AAE	LTE-FDD (SC-FDMA, 50% RB, 20 MHz, QPSK)	LTE-FDD	5.81	±9.6
10298	AAE	LTE-FDD (SC-FDMA, 50% RB, 3 MHz, QPSK)	LTE-FDD	5.72	±9.6
10299	AAE	LTE-FDD (SC-FDMA, 50% RB, 3 MHz, 16-QAM)	LTE-FDD	6.39	±9.6
10300	AAE	LTE-FDD (SC-FDMA, 50% RB, 3 MHz, 64-QAM)	LTE-FDD	6.60	±9.6
10301	AAA	IEEE 802.16e WiMAX (29:18, 5 ms, 10 MHz, QPSK, PUSC)	WiMAX	12.03	±9.6
10302	AAA	IEEE 802.16e WiMAX (29:18, 5 ms, 10 MHz, QPSK, PUSC, 3 CTRL symbols)	WiMAX	12.57	±9.6
10303	AAA	IEEE 802.16e WiMAX (31:15, 5 ms, 10 MHz, 64QAM, PUSC)	WiMAX	12.52	±9.6
10304	AAA	IEEE 802.16e WiMAX (29:18, 5 ms, 10 MHz, 64QAM, PUSC)	WiMAX	11.86	±9.6
10305	AAA	IEEE 802.16e WiMAX (31:15, 10 ms, 10 MHz, 64QAM, PUSC, 15 symbols)	WiMAX	15.24	±9.6
10306	AAA	IEEE 802.16e WiMAX (29:18, 10 ms, 10 MHz, 64QAM, PUSC, 18 symbols)	WiMAX	14.67	±9.6

UID	Rev	Communication System Name	Group	PAR (dB)	Unc^E $k=2$
10307	AAA	IEEE 802.16e WiMAX (29:18, 10 ms, 10 MHz, QPSK, PUSC, 18 symbols)	WiMAX	14.49	±9.6
10308	AAA	IEEE 802.16e WiMAX (29:18, 10 ms, 10 MHz, 16QAM, PUSC)	WiMAX	14.46	±9.6
10309	AAA	IEEE 802.16e WiMAX (29:18, 10 ms, 10 MHz, 16QAM, AMC 2x3, 18 symbols)	WiMAX	14.58	±9.6
10310	AAA	IEEE 802.16e WiMAX (29:18, 10 ms, 10 MHz, QPSK, AMC 2x3, 18 symbols)	WiMAX	14.57	±9.6
10311	AAE	LTE-FDD (SC-FDMA, 100% RB, 15 MHz, QPSK)	LTE-FDD	6.06	±9.6
10313	AAA	iDEN 1:3	iDEN	10.51	±9.6
10314	AAA	iDEN 1:6	iDEN	13.48	±9.6
10315	AAB	IEEE 802.11b WiFi 2.4 GHz (DSSS, 1 Mbps, 96pc duty cycle)	WLAN	1.71	±9.6
10316	AAB	IEEE 802.11g WiFi 2.4 GHz (ERP-OFDM, 6 Mbps, 96pc duty cycle)	WLAN	8.36	±9.6
10317	AAE	IEEE 802.11a WiFi 5 GHz (OFDM, 6 Mbps, 96pc duty cycle)	WLAN	8.36	±9.6
10352	AAA	Pulse Waveform (200Hz, 10%)	Generic	10.00	±9.6
10353	AAA	Pulse Waveform (200Hz, 20%)	Generic	6.99	±9.6
10354	AAA	Pulse Waveform (200Hz, 40%)	Generic	3.98	±9.6
10355	AAA	Pulse Waveform (200Hz, 60%)	Generic	2.22	±9.6
10356	AAA	Pulse Waveform (200Hz, 80%)	Generic	0.97	±9.6
10387	AAA	QPSK Waveform, 1 MHz	Generic	5.10	±9.6
10388	AAA	QPSK Waveform, 10 MHz	Generic	5.22	±9.6
10396	AAA	64-QAM Waveform, 100 kHz	Generic	6.27	±9.6
10399	AAA	64-QAM Waveform, 40 MHz	Generic	6.27	±9.6
10400	AAF	IEEE 802.11ac WiFi (20 MHz, 64-QAM, 99pc duty cycle)	WLAN	8.37	±9.6
10401	AAF	IEEE 802.11ac WiFi (40 MHz, 64-QAM, 99pc duty cycle)	WLAN	8.60	±9.6
10402	AAF	IEEE 802.11ac WiFi (80 MHz, 64-QAM, 99pc duty cycle)	WLAN	8.53	±9.6
10403	AAB	CDMA2000 (1xEV-DO, Rev. 0)	CDMA2000	3.76	±9.6
10404	AAB	CDMA2000 (1xEV-DO, Rev. A)	CDMA2000	3.77	±9.6
10406	AAB	CDMA2000, RC3, SO32, SCH0, Full Rate	CDMA2000	5.22	±9.6
10410	AAH	LTE-TDD (SC-FDMA, 1 RB, 10 MHz, QPSK, UL Subframe=2,3,4,7,8,9, Subframe Conf=4)	LTE-TDD	7.82	±9.6
10414	AAA	WLAN CCDF, 64-QAM, 40 MHz	Generic	8.54	±9.6
10415	AAA	IEEE 802.11b WiFi 2.4 GHz (DSSS, 1 Mbps, 99pc duty cycle)	WLAN	1.54	±9.6
10416	AAA	IEEE 802.11g WiFi 2.4 GHz (ERP-OFDM, 6 Mbps, 99pc duty cycle)	WLAN	8.23	±9.6
10417	AAD	IEEE 802.11a/h WiFi 5 GHz (OFDM, 6 Mbps, 99pc duty cycle)	WLAN	8.23	±9.6
10418	AAA	IEEE 802.11g WiFi 2.4 GHz (DSSS-OFDM, 6 Mbps, 99pc duty cycle, Long preambule)	WLAN	8.14	±9.6
10419	AAA	IEEE 802.11g WiFi 2.4 GHz (DSSS-OFDM, 6 Mbps, 99pc duty cycle, Short preambule)	WLAN	8.19	±9.6
10422	AAD	IEEE 802.11n (HT Greenfield, 7.2 Mbps, BPSK)	WLAN	8.32	±9.6
10423	AAD	IEEE 802.11n (HT Greenfield, 43.3 Mbps, 16-QAM)	WLAN	8.47	±9.6
10424	AAD	IEEE 802.11n (HT Greenfield, 72.2 Mbps, 64-QAM)	WLAN	8.40	±9.6
10425	AAD	IEEE 802.11n (HT Greenfield, 15 Mbps, BPSK)	WLAN	8.41	±9.6
10426	AAD	IEEE 802.11n (HT Greenfield, 90 Mbps, 16-QAM)	WLAN	8.45	±9.6
10427	AAD	IEEE 802.11n (HT Greenfield, 150 Mbps, 64-QAM)	WLAN	8.41	±9.6
10430	AAE	LTE-FDD (OFDMA, 5 MHz, E-TM 3.1)	LTE-FDD	8.28	±9.6
10431	AAE	LTE-FDD (OFDMA, 10 MHz, E-TM 3.1)	LTE-FDD	8.38	±9.6
10432	AAD	LTE-FDD (OFDMA, 15 MHz, E-TM 3.1)	LTE-FDD	8.34	±9.6
10433	AAD	LTE-FDD (OFDMA, 20 MHz, E-TM 3.1)	LTE-FDD	8.34	±9.6
10434	AAB	W-CDMA (BS Test Model 1, 64 DPCH)	WCDMA	8.60	±9.6
10435	AAG	LTE-TDD (SC-FDMA, 1 RB, 20 MHz, QPSK, UL Subframe=2,3,4,7,8,9)	LTE-TDD	7.82	±9.6
10447	AAE	LTE-FDD (OFDMA, 5 MHz, E-TM 3.1, Clipping 44%)	LTE-FDD	7.56	±9.6
10448	AAE	LTE-FDD (OFDMA, 10 MHz, E-TM 3.1, Clippin 44%)	LTE-FDD	7.53	±9.6
10449	AAD	LTE-FDD (OFDMA, 15 MHz, E-TM 3.1, Cliping 44%)	LTE-FDD	7.51	±9.6
10450	AAD	LTE-FDD (OFDMA, 20 MHz, E-TM 3.1, Clipping 44%)	LTE-FDD	7.48	±9.6
10451	AAB	W-CDMA (BS Test Model 1, 64 DPCH, Clipping 44%)	WCDMA	7.59	±9.6
10453	AAE	Validation (Square, 10 ms, 1 ms)	Test	10.00	±9.6
10456	AAD	IEEE 802.11ac WiFi (160 MHz, 64-QAM, 99pc duty cycle)	WLAN	8.63	±9.6
10457	AAB	UMTS-FDD (DC-HSDPA)	WCDMA	6.62	±9.6
10458	AAA	CDMA2000 (1xEV-DO, Rev. B, 2 carriers)	CDMA2000	6.55	±9.6
10459	AAA	CDMA2000 (1xEV-DO, Rev. B, 3 carriers)	CDMA2000	8.25	±9.6
10460	AAB	UMTS-FDD (WCDMA, AMR)	WCDMA	2.39	±9.6
10461	AAC	LTE-TDD (SC-FDMA, 1 RB, 1.4 MHz, QPSK, UL Subframe=2,3,4,7,8,9)	LTE-TDD	7.82	±9.6
10462	AAC	LTE-TDD (SC-FDMA, 1 RB, 1.4 MHz, 16-QAM, UL Subframe=2,3,4,7,8,9)	LTE-TDD	8.30	±9.6
10463	AAC	LTE-TDD (SC-FDMA, 1 RB, 1.4 MHz, 64-QAM, UL Subframe=2,3,4,7,8,9)	LTE-TDD	8.56	±9.6
10464	AAD	LTE-TDD (SC-FDMA, 1 RB, 3 MHz, QPSK, UL Subframe=2,3,4,7,8,9)	LTE-TDD	7.82	±9.6
10465	AAD	LTE-TDD (SC-FDMA, 1 RB, 3 MHz, 16-QAM, UL Subframe=2,3,4,7,8,9)	LTE-TDD	8.32	±9.6
10466	AAD	LTE-TDD (SC-FDMA, 1 RB, 3 MHz, 64-QAM, UL Subframe=2,3,4,7,8,9)	LTE-TDD	8.57	±9.6
10467	AAG	LTE-TDD (SC-FDMA, 1 RB, 5 MHz, QPSK, UL Subframe=2,3,4,7,8,9)	LTE-TDD	7.82	±9.6
10468	AAG	LTE-TDD (SC-FDMA, 1 RB, 5 MHz, 16-QAM, UL Subframe=2,3,4,7,8,9)	LTE-TDD	8.32	±9.6
10469	AAG	LTE-TDD (SC-FDMA, 1 RB, 5 MHz, 64-QAM, UL Subframe=2,3,4,7,8,9)	LTE-TDD	8.56	±9.6
10470	AAG	LTE-TDD (SC-FDMA, 1 RB, 10 MHz, QPSK, UL Subframe=2,3,4,7,8,9)	LTE-TDD	7.82	±9.6
10471	AAG	LTE-TDD (SC-FDMA, 1 RB, 10 MHz, 16-QAM, UL Subframe=2,3,4,7,8,9)	LTE-TDD	8.32	±9.6

UID	Rev	Communication System Name	Group	PAR (dB)	Unc^E $k = 2$
10472	AAG	LTE-TDD (SC-FDMA, 1 RB, 10 MHz, 64-QAM, UL Subframe=2,3,4,7,8,9)	LTE-TDD	8.57	±9.6
10473	AAF	LTE-TDD (SC-FDMA, 1 RB, 15 MHz, QPSK, UL Subframe=2,3,4,7,8,9)	LTE-TDD	7.82	±9.6
10474	AAF	LTE-TDD (SC-FDMA, 1 RB, 15 MHz, 16-QAM, UL Subframe=2,3,4,7,8,9)	LTE-TDD	8.32	±9.6
10475	AAF	LTE-TDD (SC-FDMA, 1 RB, 15 MHz, 64-QAM, UL Subframe=2,3,4,7,8,9)	LTE-TDD	8.57	±9.6
10477	AAG	LTE-TDD (SC-FDMA, 1 RB, 20 MHz, 16-QAM, UL Subframe=2,3,4,7,8,9)	LTE-TDD	8.32	±9.6
10478	AAG	LTE-TDD (SC-FDMA, 1 RB, 20 MHz, 64-QAM, UL Subframe=2,3,4,7,8,9)	LTE-TDD	8.57	±9.6
10479	AAC	LTE-TDD (SC-FDMA, 50% RB, 1.4 MHz, QPSK, UL Subframe=2,3,4,7,8,9)	LTE-TDD	7.74	±9.6
10480	AAC	LTE-TDD (SC-FDMA, 50% RB, 1.4 MHz, 16-QAM, UL Subframe=2,3,4,7,8,9)	LTE-TDD	8.18	±9.6
10481	AAC	LTE-TDD (SC-FDMA, 50% RB, 1.4 MHz, 64-QAM, UL Subframe=2,3,4,7,8,9)	LTE-TDD	8.45	±9.6
10482	AAD	LTE-TDD (SC-FDMA, 50% RB, 3 MHz, QPSK, UL Subframe=2,3,4,7,8,9)	LTE-TDD	7.71	±9.6
10483	AAD	LTE-TDD (SC-FDMA, 50% RB, 3 MHz, 16-QAM, UL Subframe=2,3,4,7,8,9)	LTE-TDD	8.39	±9.6
10484	AAD	LTE-TDD (SC-FDMA, 50% RB, 3 MHz, 64-QAM, UL Subframe=2,3,4,7,8,9)	LTE-TDD	8.47	±9.6
10485	AAG	LTE-TDD (SC-FDMA, 50% RB, 5 MHz, QPSK, UL Subframe=2,3,4,7,8,9)	LTE-TDD	7.59	±9.6
10486	AAG	LTE-TDD (SC-FDMA, 50% RB, 5 MHz, 16-QAM, UL Subframe=2,3,4,7,8,9)	LTE-TDD	8.38	±9.6
10487	AAG	LTE-TDD (SC-FDMA, 50% RB, 5 MHz, 64-QAM, UL Subframe=2,3,4,7,8,9)	LTE-TDD	8.60	±9.6
10488	AAG	LTE-TDD (SC-FDMA, 50% RB, 10 MHz, QPSK, UL Subframe=2,3,4,7,8,9)	LTE-TDD	7.70	±9.6
10489	AAG	LTE-TDD (SC-FDMA, 50% RB, 10 MHz, 16-QAM, UL Subframe=2,3,4,7,8,9)	LTE-TDD	8.31	±9.6
10490	AAG	LTE-TDD (SC-FDMA, 50% RB, 10 MHz, 64-QAM, UL Subframe=2,3,4,7,8,9)	LTE-TDD	8.54	±9.6
10491	AAF	LTE-TDD (SC-FDMA, 50% RB, 15 MHz, QPSK, UL Subframe=2,3,4,7,8,9)	LTE-TDD	7.74	±9.6
10492	AAF	LTE-TDD (SC-FDMA, 50% RB, 15 MHz, 16-QAM, UL Subframe=2,3,4,7,8,9)	LTE-TDD	8.41	±9.6
10493	AAF	LTE-TDD (SC-FDMA, 50% RB, 15 MHz, 64-QAM, UL Subframe=2,3,4,7,8,9)	LTE-TDD	8.55	±9.6
10494	AAG	LTE-TDD (SC-FDMA, 50% RB, 20 MHz, QPSK, UL Subframe=2,3,4,7,8,9)	LTE-TDD	7.74	±9.6
10495	AAG	LTE-TDD (SC-FDMA, 50% RB, 20 MHz, 16-QAM, UL Subframe=2,3,4,7,8,9)	LTE-TDD	8.37	±9.6
10496	AAG	LTE-TDD (SC-FDMA, 50% RB, 20 MHz, 64-QAM, UL Subframe=2,3,4,7,8,9)	LTE-TDD	8.54	±9.6
10497	AAC	LTE-TDD (SC-FDMA, 100% RB, 1.4 MHz, QPSK, UL Subframe=2,3,4,7,8,9)	LTE-TDD	7.67	±9.6
10498	AAC	LTE-TDD (SC-FDMA, 100% RB, 1.4 MHz, 16-QAM, UL Subframe=2,3,4,7,8,9)	LTE-TDD	8.40	±9.6
10499	AAC	LTE-TDD (SC-FDMA, 100% RB, 1.4 MHz, 64-QAM, UL Subframe=2,3,4,7,8,9)	LTE-TDD	8.68	±9.6
10500	AAD	LTE-TDD (SC-FDMA, 100% RB, 3 MHz, QPSK, UL Subframe=2,3,4,7,8,9)	LTE-TDD	7.67	±9.6
10501	AAD	LTE-TDD (SC-FDMA, 100% RB, 3 MHz, 16-QAM, UL Subframe=2,3,4,7,8,9)	LTE-TDD	8.44	±9.6
10502	AAD	LTE-TDD (SC-FDMA, 100% RB, 3 MHz, 64-QAM, UL Subframe=2,3,4,7,8,9)	LTE-TDD	8.52	±9.6
10503	AAG	LTE-TDD (SC-FDMA, 100% RB, 5 MHz, QPSK, UL Subframe=2,3,4,7,8,9)	LTE-TDD	7.72	±9.6
10504	AAG	LTE-TDD (SC-FDMA, 100% RB, 5 MHz, 16-QAM, UL Subframe=2,3,4,7,8,9)	LTE-TDD	8.31	±9.6
10505	AAG	LTE-TDD (SC-FDMA, 100% RB, 5 MHz, 64-QAM, UL Subframe=2,3,4,7,8,9)	LTE-TDD	8.54	±9.6
10506	AAG	LTE-TDD (SC-FDMA, 100% RB, 10 MHz, QPSK, UL Subframe=2,3,4,7,8,9)	LTE-TDD	7.74	±9.6
10507	AAG	LTE-TDD (SC-FDMA, 100% RB, 10 MHz, 16-QAM, UL Subframe=2,3,4,7,8,9)	LTE-TDD	8.36	±9.6
10508	AAG	LTE-TDD (SC-FDMA, 100% RB, 10 MHz, 64-QAM, UL Subframe=2,3,4,7,8,9)	LTE-TDD	8.55	±9.6
10509	AAF	LTE-TDD (SC-FDMA, 100% RB, 15 MHz, QPSK, UL Subframe=2,3,4,7,8,9)	LTE-TDD	7.99	±9.6
10510	AAF	LTE-TDD (SC-FDMA, 100% RB, 15 MHz, 16-QAM, UL Subframe=2,3,4,7,8,9)	LTE-TDD	8.49	±9.6
10511	AAF	LTE-TDD (SC-FDMA, 100% RB, 15 MHz, 64-QAM, UL Subframe=2,3,4,7,8,9)	LTE-TDD	8.51	±9.6
10512	AAG	LTE-TDD (SC-FDMA, 100% RB, 20 MHz, QPSK, UL Subframe=2,3,4,7,8,9)	LTE-TDD	7.74	±9.6
10513	AAG	LTE-TDD (SC-FDMA, 100% RB, 20 MHz, 16-QAM, UL Subframe=2,3,4,7,8,9)	LTE-TDD	8.42	±9.6
10514	AAG	LTE-TDD (SC-FDMA, 100% RB, 20 MHz, 64-QAM, UL Subframe=2,3,4,7,8,9)	LTE-TDD	8.45	±9.6
10515	AAA	IEEE 802.11b WiFi 2.4 GHz (DSSS, 2 Mbps, 99pc duty cycle)	WLAN	1.58	±9.6
10516	AAA	IEEE 802.11b WiFi 2.4 GHz (DSSS, 5.5 Mbps, 99pc duty cycle)	WLAN	1.57	±9.6
10517	AAA	IEEE 802.11b WiFi 2.4 GHz (DSSS, 11 Mbps, 99pc duty cycle)	WLAN	1.58	±9.6
10518	AAD	IEEE 802.11a/h WiFi 5 GHz (OFDM, 9 Mbps, 99pc duty cycle)	WLAN	8.23	±9.6
10519	AAD	IEEE 802.11a/h WiFi 5 GHz (OFDM, 12 Mbps, 99pc duty cycle)	WLAN	8.39	±9.6
10520	AAD	IEEE 802.11a/h WiFi 5 GHz (OFDM, 18 Mbps, 99pc duty cycle)	WLAN	8.12	±9.6
10521	AAD	IEEE 802.11a/h WiFi 5 GHz (OFDM, 24 Mbps, 99pc duty cycle)	WLAN	7.97	±9.6
10522	AAD	IEEE 802.11a/h WiFi 5 GHz (OFDM, 36 Mbps, 99pc duty cycle)	WLAN	8.45	±9.6
10523	AAD	IEEE 802.11a/h WiFi 5 GHz (OFDM, 48 Mbps, 99pc duty cycle)	WLAN	8.08	±9.6
10524	AAD	IEEE 802.11a/h WiFi 5 GHz (OFDM, 54 Mbps, 99pc duty cycle)	WLAN	8.27	±9.6
10525	AAD	IEEE 802.11ac WiFi (20 MHz, MCS0, 99pc duty cycle)	WLAN	8.36	±9.6
10526	AAD	IEEE 802.11ac WiFi (20 MHz, MCS1, 99pc duty cycle)	WLAN	8.42	±9.6
10527	AAD	IEEE 802.11ac WiFi (20 MHz, MCS2, 99pc duty cycle)	WLAN	8.21	±9.6
10528	AAD	IEEE 802.11ac WiFi (20 MHz, MCS3, 99pc duty cycle)	WLAN	8.36	±9.6
10529	AAD	IEEE 802.11ac WiFi (20 MHz, MCS4, 99pc duty cycle)	WLAN	8.36	±9.6
10531	AAD	IEEE 802.11ac WiFi (20 MHz, MCS6, 99pc duty cycle)	WLAN	8.43	±9.6
10532	AAD	IEEE 802.11ac WiFi (20 MHz, MCS7, 99pc duty cycle)	WLAN	8.29	±9.6
10533	AAD	IEEE 802.11ac WiFi (20 MHz, MCS8, 99pc duty cycle)	WLAN	8.38	±9.6
10534	AAD	IEEE 802.11ac WiFi (40 MHz, MCS0, 99pc duty cycle)	WLAN	8.45	±9.6
10535	AAD	IEEE 802.11ac WiFi (40 MHz, MCS1, 99pc duty cycle)	WLAN	8.45	±9.6
10536	AAD	IEEE 802.11ac WiFi (40 MHz, MCS2, 99pc duty cycle)	WLAN	8.32	±9.6
10537	AAD	IEEE 802.11ac WiFi (40 MHz, MCS3, 99pc duty cycle)	WLAN	8.44	±9.6
10538	AAD	IEEE 802.11ac WiFi (40 MHz, MCS4, 99pc duty cycle)	WLAN	8.54	±9.6
10540	AAD	IEEE 802.11ac WiFi (40 MHz, MCS6, 99pc duty cycle)	WLAN	8.39	±9.6

UID	Rev	Communication System Name	Group	PAR (dB)	Unc^E $k = 2$
10541	AAD	IEEE 802.11ac WiFi (40 MHz, MCS7, 99pc duty cycle)	WLAN	8.46	±9.6
10542	AAD	IEEE 802.11ac WiFi (40 MHz, MCS8, 99pc duty cycle)	WLAN	8.65	±9.6
10543	AAD	IEEE 802.11ac WiFi (40 MHz, MCS9, 99pc duty cycle)	WLAN	8.65	±9.6
10544	AAD	IEEE 802.11ac WiFi (80 MHz, MCS0, 99pc duty cycle)	WLAN	8.47	±9.6
10545	AAD	IEEE 802.11ac WiFi (80 MHz, MCS1, 99pc duty cycle)	WLAN	8.55	±9.6
10546	AAD	IEEE 802.11ac WiFi (80 MHz, MCS2, 99pc duty cycle)	WLAN	8.35	±9.6
10547	AAD	IEEE 802.11ac WiFi (80 MHz, MCS3, 99pc duty cycle)	WLAN	8.49	±9.6
10548	AAD	IEEE 802.11ac WiFi (80 MHz, MCS4, 99pc duty cycle)	WLAN	8.37	±9.6
10550	AAD	IEEE 802.11ac WiFi (80 MHz, MCS6, 99pc duty cycle)	WLAN	8.38	±9.6
10551	AAD	IEEE 802.11ac WiFi (80 MHz, MCS7, 99pc duty cycle)	WLAN	8.50	±9.6
10552	AAD	IEEE 802.11ac WiFi (80 MHz, MCS8, 99pc duty cycle)	WLAN	8.42	±9.6
10553	AAD	IEEE 802.11ac WiFi (80 MHz, MCS9, 99pc duty cycle)	WLAN	8.45	±9.6
10554	AAE	IEEE 802.11ac WiFi (160 MHz, MCS0, 99pc duty cycle)	WLAN	8.48	±9.6
10555	AAE	IEEE 802.11ac WiFi (160 MHz, MCS1, 99pc duty cycle)	WLAN	8.47	±9.6
10556	AAE	IEEE 802.11ac WiFi (160 MHz, MCS2, 99pc duty cycle)	WLAN	8.50	±9.6
10557	AAE	IEEE 802.11ac WiFi (160 MHz, MCS3, 99pc duty cycle)	WLAN	8.52	±9.6
10558	AAE	IEEE 802.11ac WiFi (160 MHz, MCS4, 99pc duty cycle)	WLAN	8.61	±9.6
10560	AAE	IEEE 802.11ac WiFi (160 MHz, MCS6, 99pc duty cycle)	WLAN	8.73	±9.6
10561	AAE	IEEE 802.11ac WiFi (160 MHz, MCS7, 99pc duty cycle)	WLAN	8.56	±9.6
10562	AAE	IEEE 802.11ac WiFi (160 MHz, MCS8, 99pc duty cycle)	WLAN	8.69	±9.6
10563	AAE	IEEE 802.11ac WiFi (160 MHz, MCS9, 99pc duty cycle)	WLAN	8.77	±9.6
10564	AAA	IEEE 802.11g WiFi 2.4 GHz (DSSS-OFDM, 9 Mbps, 99pc duty cycle)	WLAN	8.25	±9.6
10565	AAA	IEEE 802.11g WiFi 2.4 GHz (DSSS-OFDM, 12 Mbps, 99pc duty cycle)	WLAN	8.45	±9.6
10566	AAA	IEEE 802.11g WiFi 2.4 GHz (DSSS-OFDM, 18 Mbps, 99pc duty cycle)	WLAN	8.13	±9.6
10567	AAA	IEEE 802.11g WiFi 2.4 GHz (DSSS-OFDM, 24 Mbps, 99pc duty cycle)	WLAN	8.00	±9.6
10568	AAA	IEEE 802.11g WiFi 2.4 GHz (DSSS-OFDM, 36 Mbps, 99pc duty cycle)	WLAN	8.37	±9.6
10569	AAA	IEEE 802.11g WiFi 2.4 GHz (DSSS-OFDM, 48 Mbps, 99pc duty cycle)	WLAN	8.10	±9.6
10570	AAA	IEEE 802.11g WiFi 2.4 GHz (DSSS-OFDM, 54 Mbps, 99pc duty cycle)	WLAN	8.30	±9.6
10571	AAA	IEEE 802.11b WiFi 2.4 GHz (DSSS, 1 Mbps, 90pc duty cycle)	WLAN	1.99	±9.6
10572	AAA	IEEE 802.11b WiFi 2.4 GHz (DSSS, 2 Mbps, 90pc duty cycle)	WLAN	1.99	±9.6
10573	AAA	IEEE 802.11b WiFi 2.4 GHz (DSSS, 5.5 Mbps, 90pc duty cycle)	WLAN	1.98	±9.6
10574	AAA	IEEE 802.11b WiFi 2.4 GHz (DSSS, 11 Mbps, 90pc duty cycle)	WLAN	1.98	±9.6
10575	AAA	IEEE 802.11g WiFi 2.4 GHz (DSSS-OFDM, 6 Mbps, 90pc duty cycle)	WLAN	8.59	±9.6
10576	AAA	IEEE 802.11g WiFi 2.4 GHz (DSSS-OFDM, 9 Mbps, 90pc duty cycle)	WLAN	8.60	±9.6
10577	AAA	IEEE 802.11g WiFi 2.4 GHz (DSSS-OFDM, 12 Mbps, 90pc duty cycle)	WLAN	8.70	±9.6
10578	AAA	IEEE 802.11g WiFi 2.4 GHz (DSSS-OFDM, 18 Mbps, 90pc duty cycle)	WLAN	8.49	±9.6
10579	AAA	IEEE 802.11g WiFi 2.4 GHz (DSSS-OFDM, 24 Mbps, 90pc duty cycle)	WLAN	8.36	±9.6
10580	AAA	IEEE 802.11g WiFi 2.4 GHz (DSSS-OFDM, 36 Mbps, 90pc duty cycle)	WLAN	8.76	±9.6
10581	AAA	IEEE 802.11g WiFi 2.4 GHz (DSSS-OFDM, 48 Mbps, 90pc duty cycle)	WLAN	8.35	±9.6
10582	AAA	IEEE 802.11g WiFi 2.4 GHz (DSSS-OFDM, 54 Mbps, 90pc duty cycle)	WLAN	8.67	±9.6
10583	AAD	IEEE 802.11a/h WiFi 5 GHz (OFDM, 6 Mbps, 90pc duty cycle)	WLAN	8.59	±9.6
10584	AAD	IEEE 802.11a/h WiFi 5 GHz (OFDM, 9 Mbps, 90pc duty cycle)	WLAN	8.60	±9.6
10585	AAD	IEEE 802.11a/h WiFi 5 GHz (OFDM, 12 Mbps, 90pc duty cycle)	WLAN	8.70	±9.6
10586	AAD	IEEE 802.11a/h WiFi 5 GHz (OFDM, 18 Mbps, 90pc duty cycle)	WLAN	8.49	±9.6
10587	AAD	IEEE 802.11a/h WiFi 5 GHz (OFDM, 24 Mbps, 90pc duty cycle)	WLAN	8.36	±9.6
10588	AAD	IEEE 802.11a/h WiFi 5 GHz (OFDM, 36 Mbps, 90pc duty cycle)	WLAN	8.76	±9.6
10589	AAD	IEEE 802.11a/h WiFi 5 GHz (OFDM, 48 Mbps, 90pc duty cycle)	WLAN	8.35	±9.6
10590	AAD	IEEE 802.11a/h WiFi 5 GHz (OFDM, 54 Mbps, 90pc duty cycle)	WLAN	8.67	±9.6
10591	AAD	IEEE 802.11n (HT Mixed, 20 MHz, MCS0, 90pc duty cycle)	WLAN	8.63	±9.6
10592	AAD	IEEE 802.11n (HT Mixed, 20 MHz, MCS1, 90pc duty cycle)	WLAN	8.79	±9.6
10593	AAD	IEEE 802.11n (HT Mixed, 20 MHz, MCS2, 90pc duty cycle)	WLAN	8.64	±9.6
10594	AAD	IEEE 802.11n (HT Mixed, 20 MHz, MCS3, 90pc duty cycle)	WLAN	8.74	±9.6
10595	AAD	IEEE 802.11n (HT Mixed, 20 MHz, MCS4, 90pc duty cycle)	WLAN	8.74	±9.6
10596	AAD	IEEE 802.11n (HT Mixed, 20 MHz, MCS5, 90pc duty cycle)	WLAN	8.71	±9.6
10597	AAD	IEEE 802.11n (HT Mixed, 20 MHz, MCS6, 90pc duty cycle)	WLAN	8.72	±9.6
10598	AAD	IEEE 802.11n (HT Mixed, 20 MHz, MCS7, 90pc duty cycle)	WLAN	8.50	±9.6
10599	AAD	IEEE 802.11n (HT Mixed, 40 MHz, MCS0, 90pc duty cycle)	WLAN	8.79	±9.6
10600	AAD	IEEE 802.11n (HT Mixed, 40 MHz, MCS1, 90pc duty cycle)	WLAN	8.88	±9.6
10601	AAD	IEEE 802.11n (HT Mixed, 40 MHz, MCS2, 90pc duty cycle)	WLAN	8.82	±9.6
10602	AAD	IEEE 802.11n (HT Mixed, 40 MHz, MCS3, 90pc duty cycle)	WLAN	8.94	±9.6
10603	AAD	IEEE 802.11n (HT Mixed, 40 MHz, MCS4, 90pc duty cycle)	WLAN	9.03	±9.6
10604	AAD	IEEE 802.11n (HT Mixed, 40 MHz, MCS5, 90pc duty cycle)	WLAN	8.76	±9.6
10605	AAD	IEEE 802.11n (HT Mixed, 40 MHz, MCS6, 90pc duty cycle)	WLAN	8.97	±9.6
10606	AAD	IEEE 802.11n (HT Mixed, 40 MHz, MCS7, 90pc duty cycle)	WLAN	8.82	±9.6
10607	AAD	IEEE 802.11ac WiFi (20 MHz, MCS0, 90pc duty cycle)	WLAN	8.64	±9.6
10608	AAD	IEEE 802.11ac WiFi (20 MHz, MCS1, 90pc duty cycle)	WLAN	8.77	±9.6

UID	Rev	Communication System Name	Group	PAR (dB)	Unc^E $k = 2$
10609	AAD	IEEE 802.11ac WiFi (20 MHz, MCS2, 90pc duty cycle)	WLAN	8.57	±9.6
10610	AAD	IEEE 802.11ac WiFi (20 MHz, MCS3, 90pc duty cycle)	WLAN	8.78	±9.6
10611	AAD	IEEE 802.11ac WiFi (20 MHz, MCS4, 90pc duty cycle)	WLAN	8.70	±9.6
10612	AAD	IEEE 802.11ac WiFi (20 MHz, MCS5, 90pc duty cycle)	WLAN	8.77	±9.6
10613	AAD	IEEE 802.11ac WiFi (20 MHz, MCS6, 90pc duty cycle)	WLAN	8.94	±9.6
10614	AAD	IEEE 802.11ac WiFi (20 MHz, MCS7, 90pc duty cycle)	WLAN	8.59	±9.6
10615	AAD	IEEE 802.11ac WiFi (20 MHz, MCS8, 90pc duty cycle)	WLAN	8.82	±9.6
10616	AAD	IEEE 802.11ac WiFi (40 MHz, MCS0, 90pc duty cycle)	WLAN	8.82	±9.6
10617	AAD	IEEE 802.11ac WiFi (40 MHz, MCS1, 90pc duty cycle)	WLAN	8.81	±9.6
10618	AAD	IEEE 802.11ac WiFi (40 MHz, MCS2, 90pc duty cycle)	WLAN	8.58	±9.6
10619	AAD	IEEE 802.11ac WiFi (40 MHz, MCS3, 90pc duty cycle)	WLAN	8.86	±9.6
10620	AAD	IEEE 802.11ac WiFi (40 MHz, MCS4, 90pc duty cycle)	WLAN	8.87	±9.6
10621	AAD	IEEE 802.11ac WiFi (40 MHz, MCS5, 90pc duty cycle)	WLAN	8.77	±9.6
10622	AAD	IEEE 802.11ac WiFi (40 MHz, MCS6, 90pc duty cycle)	WLAN	8.68	±9.6
10623	AAD	IEEE 802.11ac WiFi (40 MHz, MCS7, 90pc duty cycle)	WLAN	8.82	±9.6
10624	AAD	IEEE 802.11ac WiFi (40 MHz, MCS8, 90pc duty cycle)	WLAN	8.96	±9.6
10625	AAD	IEEE 802.11ac WiFi (40 MHz, MCS9, 90pc duty cycle)	WLAN	8.96	±9.6
10626	AAD	IEEE 802.11ac WiFi (80 MHz, MCS0, 90pc duty cycle)	WLAN	8.83	±9.6
10627	AAD	IEEE 802.11ac WiFi (80 MHz, MCS1, 90pc duty cycle)	WLAN	8.88	±9.6
10628	AAD	IEEE 802.11ac WiFi (80 MHz, MCS2, 90pc duty cycle)	WLAN	8.71	±9.6
10629	AAD	IEEE 802.11ac WiFi (80 MHz, MCS3, 90pc duty cycle)	WLAN	8.85	±9.6
10630	AAD	IEEE 802.11ac WiFi (80 MHz, MCS4, 90pc duty cycle)	WLAN	8.72	±9.6
10631	AAD	IEEE 802.11ac WiFi (80 MHz, MCS5, 90pc duty cycle)	WLAN	8.81	±9.6
10632	AAD	IEEE 802.11ac WiFi (80 MHz, MCS6, 90pc duty cycle)	WLAN	8.74	±9.6
10633	AAD	IEEE 802.11ac WiFi (80 MHz, MCS7, 90pc duty cycle)	WLAN	8.83	±9.6
10634	AAD	IEEE 802.11ac WiFi (80 MHz, MCS8, 90pc duty cycle)	WLAN	8.80	±9.6
10635	AAD	IEEE 802.11ac WiFi (80 MHz, MCS9, 90pc duty cycle)	WLAN	8.81	±9.6
10636	AAE	IEEE 802.11ac WiFi (160 MHz, MCS0, 90pc duty cycle)	WLAN	8.83	±9.6
10637	AAE	IEEE 802.11ac WiFi (160 MHz, MCS1, 90pc duty cycle)	WLAN	8.79	±9.6
10638	AAE	IEEE 802.11ac WiFi (160 MHz, MCS2, 90pc duty cycle)	WLAN	8.86	±9.6
10639	AAE	IEEE 802.11ac WiFi (160 MHz, MCS3, 90pc duty cycle)	WLAN	8.85	±9.6
10640	AAE	IEEE 802.11ac WiFi (160 MHz, MCS4, 90pc duty cycle)	WLAN	8.98	±9.6
10641	AAE	IEEE 802.11ac WiFi (160 MHz, MCS5, 90pc duty cycle)	WLAN	9.06	±9.6
10642	AAE	IEEE 802.11ac WiFi (160 MHz, MCS6, 90pc duty cycle)	WLAN	9.06	±9.6
10643	AAE	IEEE 802.11ac WiFi (160 MHz, MCS7, 90pc duty cycle)	WLAN	8.89	±9.6
10644	AAE	IEEE 802.11ac WiFi (160 MHz, MCS8, 90pc duty cycle)	WLAN	9.05	±9.6
10645	AAE	IEEE 802.11ac WiFi (160 MHz, MCS9, 90pc duty cycle)	WLAN	9.11	±9.6
10646	AAH	LTE-TDD (SC-FDMA, 1 RB, 5 MHz, QPSK, UL Subframe=2,7)	LTE-TDD	11.96	±9.6
10647	AAG	LTE-TDD (SC-FDMA, 1 RB, 20 MHz, QPSK, UL Subframe=2,7)	LTE-TDD	11.96	±9.6
10648	AAA	CDMA2000 (1x Advanced)	CDMA2000	3.45	±9.6
10652	AAF	LTE-TDD (OFDMA, 5 MHz, E-TM 3.1, Clipping 44%)	LTE-TDD	6.91	±9.6
10653	AAF	LTE-TDD (OFDMA, 10 MHz, E-TM 3.1, Clipping 44%)	LTE-TDD	7.42	±9.6
10654	AAE	LTE-TDD (OFDMA, 15 MHz, E-TM 3.1, Clipping 44%)	LTE-TDD	6.96	±9.6
10655	AAF	LTE-TDD (OFDMA, 20 MHz, E-TM 3.1, Clipping 44%)	LTE-TDD	7.21	±9.6
10658	AAB	Pulse Waveform (200Hz, 10%)	Test	10.00	±9.6
10659	AAB	Pulse Waveform (200Hz, 20%)	Test	6.99	±9.6
10660	AAB	Pulse Waveform (200Hz, 40%)	Test	3.98	±9.6
10661	AAB	Pulse Waveform (200Hz, 60%)	Test	2.22	±9.6
10662	AAB	Pulse Waveform (200Hz, 80%)	Test	0.97	±9.6
10670	AAA	Bluetooth Low Energy	Bluetooth	2.19	±9.6
10671	AAC	IEEE 802.11ax (20 MHz, MCS0, 90pc duty cycle)	WLAN	9.09	±9.6
10672	AAC	IEEE 802.11ax (20 MHz, MCS1, 90pc duty cycle)	WLAN	8.57	±9.6
10673	AAC	IEEE 802.11ax (20 MHz, MCS2, 90pc duty cycle)	WLAN	8.78	±9.6
10674	AAC	IEEE 802.11ax (20 MHz, MCS3, 90pc duty cycle)	WLAN	8.74	±9.6
10675	AAC	IEEE 802.11ax (20 MHz, MCS4, 90pc duty cycle)	WLAN	8.90	±9.6
10676	AAC	IEEE 802.11ax (20 MHz, MCS5, 90pc duty cycle)	WLAN	8.77	±9.6
10677	AAC	IEEE 802.11ax (20 MHz, MCS6, 90pc duty cycle)	WLAN	8.73	±9.6
10678	AAC	IEEE 802.11ax (20 MHz, MCS7, 90pc duty cycle)	WLAN	8.78	±9.6
10679	AAC	IEEE 802.11ax (20 MHz, MCS8, 90pc duty cycle)	WLAN	8.89	±9.6
10680	AAC	IEEE 802.11ax (20 MHz, MCS9, 90pc duty cycle)	WLAN	8.80	±9.6
10681	AAC	IEEE 802.11ax (20 MHz, MCS10, 90pc duty cycle)	WLAN	8.62	±9.6
10682	AAC	IEEE 802.11ax (20 MHz, MCS11, 90pc duty cycle)	WLAN	8.83	±9.6
10683	AAC	IEEE 802.11ax (20 MHz, MCS0, 99pc duty cycle)	WLAN	8.42	±9.6
10684	AAC	IEEE 802.11ax (20 MHz, MCS1, 99pc duty cycle)	WLAN	8.26	±9.6
10685	AAC	IEEE 802.11ax (20 MHz, MCS2, 99pc duty cycle)	WLAN	8.33	±9.6
10686	AAC	IEEE 802.11ax (20 MHz, MCS3, 99pc duty cycle)	WLAN	8.28	±9.6

UID	Rev	Communication System Name	Group	PAR (dB)	Unc^E $k = 2$
10687	AAC	IEEE 802.11ax (20 MHz, MCS4, 99pc duty cycle)	WLAN	8.45	±9.6
10688	AAC	IEEE 802.11ax (20 MHz, MCS5, 99pc duty cycle)	WLAN	8.29	±9.6
10689	AAC	IEEE 802.11ax (20 MHz, MCS6, 99pc duty cycle)	WLAN	8.55	±9.6
10690	AAC	IEEE 802.11ax (20 MHz, MCS7, 99pc duty cycle)	WLAN	8.29	±9.6
10691	AAC	IEEE 802.11ax (20 MHz, MCS8, 99pc duty cycle)	WLAN	8.25	±9.6
10692	AAC	IEEE 802.11ax (20 MHz, MCS9, 99pc duty cycle)	WLAN	8.29	±9.6
10693	AAC	IEEE 802.11ax (20 MHz, MCS10, 99pc duty cycle)	WLAN	8.25	±9.6
10694	AAC	IEEE 802.11ax (20 MHz, MCS11, 99pc duty cycle)	WLAN	8.57	±9.6
10695	AAC	IEEE 802.11ax (40 MHz, MCS0, 90pc duty cycle)	WLAN	8.78	±9.6
10696	AAC	IEEE 802.11ax (40 MHz, MCS1, 90pc duty cycle)	WLAN	8.91	±9.6
10697	AAC	IEEE 802.11ax (40 MHz, MCS2, 90pc duty cycle)	WLAN	8.61	±9.6
10698	AAC	IEEE 802.11ax (40 MHz, MCS3, 90pc duty cycle)	WLAN	8.89	±9.6
10699	AAC	IEEE 802.11ax (40 MHz, MCS4, 90pc duty cycle)	WLAN	8.82	±9.6
10700	AAC	IEEE 802.11ax (40 MHz, MCS5, 90pc duty cycle)	WLAN	8.73	±9.6
10701	AAC	IEEE 802.11ax (40 MHz, MCS6, 90pc duty cycle)	WLAN	8.86	±9.6
10702	AAC	IEEE 802.11ax (40 MHz, MCS7, 90pc duty cycle)	WLAN	8.70	±9.6
10703	AAC	IEEE 802.11ax (40 MHz, MCS8, 90pc duty cycle)	WLAN	8.82	±9.6
10704	AAC	IEEE 802.11ax (40 MHz, MCS9, 90pc duty cycle)	WLAN	8.56	±9.6
10705	AAC	IEEE 802.11ax (40 MHz, MCS10, 90pc duty cycle)	WLAN	8.69	±9.6
10706	AAC	IEEE 802.11ax (40 MHz, MCS11, 90pc duty cycle)	WLAN	8.66	±9.6
10707	AAC	IEEE 802.11ax (40 MHz, MCS0, 99pc duty cycle)	WLAN	8.32	±9.6
10708	AAC	IEEE 802.11ax (40 MHz, MCS1, 99pc duty cycle)	WLAN	8.55	±9.6
10709	AAC	IEEE 802.11ax (40 MHz, MCS2, 99pc duty cycle)	WLAN	8.33	±9.6
10710	AAC	IEEE 802.11ax (40 MHz, MCS3, 99pc duty cycle)	WLAN	8.29	±9.6
10711	AAC	IEEE 802.11ax (40 MHz, MCS4, 99pc duty cycle)	WLAN	8.39	±9.6
10712	AAC	IEEE 802.11ax (40 MHz, MCS5, 99pc duty cycle)	WLAN	8.67	±9.6
10713	AAC	IEEE 802.11ax (40 MHz, MCS6, 99pc duty cycle)	WLAN	8.33	±9.6
10714	AAC	IEEE 802.11ax (40 MHz, MCS7, 99pc duty cycle)	WLAN	8.26	±9.6
10715	AAC	IEEE 802.11ax (40 MHz, MCS8, 99pc duty cycle)	WLAN	8.45	±9.6
10716	AAC	IEEE 802.11ax (40 MHz, MCS9, 99pc duty cycle)	WLAN	8.30	±9.6
10717	AAC	IEEE 802.11ax (40 MHz, MCS10, 99pc duty cycle)	WLAN	8.48	±9.6
10718	AAC	IEEE 802.11ax (40 MHz, MCS11, 99pc duty cycle)	WLAN	8.24	±9.6
10719	AAC	IEEE 802.11ax (80 MHz, MCS0, 90pc duty cycle)	WLAN	8.81	±9.6
10720	AAC	IEEE 802.11ax (80 MHz, MCS1, 90pc duty cycle)	WLAN	8.87	±9.6
10721	AAC	IEEE 802.11ax (80 MHz, MCS2, 90pc duty cycle)	WLAN	8.76	±9.6
10722	AAC	IEEE 802.11ax (80 MHz, MCS3, 90pc duty cycle)	WLAN	8.55	±9.6
10723	AAC	IEEE 802.11ax (80 MHz, MCS4, 90pc duty cycle)	WLAN	8.70	±9.6
10724	AAC	IEEE 802.11ax (80 MHz, MCS5, 90pc duty cycle)	WLAN	8.90	±9.6
10725	AAC	IEEE 802.11ax (80 MHz, MCS6, 90pc duty cycle)	WLAN	8.74	±9.6
10726	AAC	IEEE 802.11ax (80 MHz, MCS7, 90pc duty cycle)	WLAN	8.72	±9.6
10727	AAC	IEEE 802.11ax (80 MHz, MCS8, 90pc duty cycle)	WLAN	8.66	±9.6
10728	AAC	IEEE 802.11ax (80 MHz, MCS9, 90pc duty cycle)	WLAN	8.65	±9.6
10729	AAC	IEEE 802.11ax (80 MHz, MCS10, 90pc duty cycle)	WLAN	8.64	±9.6
10730	AAC	IEEE 802.11ax (80 MHz, MCS11, 90pc duty cycle)	WLAN	8.67	±9.6
10731	AAC	IEEE 802.11ax (80 MHz, MCS0, 99pc duty cycle)	WLAN	8.42	±9.6
10732	AAC	IEEE 802.11ax (80 MHz, MCS1, 99pc duty cycle)	WLAN	8.46	±9.6
10733	AAC	IEEE 802.11ax (80 MHz, MCS2, 99pc duty cycle)	WLAN	8.40	±9.6
10734	AAC	IEEE 802.11ax (80 MHz, MCS3, 99pc duty cycle)	WLAN	8.25	±9.6
10735	AAC	IEEE 802.11ax (80 MHz, MCS4, 99pc duty cycle)	WLAN	8.33	±9.6
10736	AAC	IEEE 802.11ax (80 MHz, MCS5, 99pc duty cycle)	WLAN	8.27	±9.6
10737	AAC	IEEE 802.11ax (80 MHz, MCS6, 99pc duty cycle)	WLAN	8.36	±9.6
10738	AAC	IEEE 802.11ax (80 MHz, MCS7, 99pc duty cycle)	WLAN	8.42	±9.6
10739	AAC	IEEE 802.11ax (80 MHz, MCS8, 99pc duty cycle)	WLAN	8.29	±9.6
10740	AAC	IEEE 802.11ax (80 MHz, MCS9, 99pc duty cycle)	WLAN	8.48	±9.6
10741	AAC	IEEE 802.11ax (80 MHz, MCS10, 99pc duty cycle)	WLAN	8.40	±9.6
10742	AAC	IEEE 802.11ax (80 MHz, MCS11, 99pc duty cycle)	WLAN	8.43	±9.6
10743	AAC	IEEE 802.11ax (160 MHz, MCS0, 90pc duty cycle)	WLAN	8.94	±9.6
10744	AAC	IEEE 802.11ax (160 MHz, MCS1, 90pc duty cycle)	WLAN	9.16	±9.6
10745	AAC	IEEE 802.11ax (160 MHz, MCS2, 90pc duty cycle)	WLAN	8.93	±9.6
10746	AAC	IEEE 802.11ax (160 MHz, MCS3, 90pc duty cycle)	WLAN	9.11	±9.6
10747	AAC	IEEE 802.11ax (160 MHz, MCS4, 90pc duty cycle)	WLAN	9.04	±9.6
10748	AAC	IEEE 802.11ax (160 MHz, MCS5, 90pc duty cycle)	WLAN	8.93	±9.6
10749	AAC	IEEE 802.11ax (160 MHz, MCS6, 90pc duty cycle)	WLAN	8.90	±9.6
10750	AAC	IEEE 802.11ax (160 MHz, MCS7, 90pc duty cycle)	WLAN	8.79	±9.6
10751	AAC	IEEE 802.11ax (160 MHz, MCS8, 90pc duty cycle)	WLAN	8.82	±9.6
10752	AAC	IEEE 802.11ax (160 MHz, MCS9, 90pc duty cycle)	WLAN	8.81	±9.6

UID	Rev	Communication System Name	Group	PAR (dB)	Unc^E $k = 2$
10753	AAC	IEEE 802.11ax (160 MHz, MCS10, 90pc duty cycle)	WLAN	9.00	±9.6
10754	AAC	IEEE 802.11ax (160 MHz, MCS11, 90pc duty cycle)	WLAN	8.94	±9.6
10755	AAC	IEEE 802.11ax (160 MHz, MCS0, 99pc duty cycle)	WLAN	8.64	±9.6
10756	AAC	IEEE 802.11ax (160 MHz, MCS1, 99pc duty cycle)	WLAN	8.77	±9.6
10757	AAC	IEEE 802.11ax (160 MHz, MCS2, 99pc duty cycle)	WLAN	8.77	±9.6
10758	AAC	IEEE 802.11ax (160 MHz, MCS3, 99pc duty cycle)	WLAN	8.69	±9.6
10759	AAC	IEEE 802.11ax (160 MHz, MCS4, 99pc duty cycle)	WLAN	8.58	±9.6
10760	AAC	IEEE 802.11ax (160 MHz, MCS5, 99pc duty cycle)	WLAN	8.49	±9.6
10761	AAC	IEEE 802.11ax (160 MHz, MCS6, 99pc duty cycle)	WLAN	8.58	±9.6
10762	AAC	IEEE 802.11ax (160 MHz, MCS7, 99pc duty cycle)	WLAN	8.49	±9.6
10763	AAC	IEEE 802.11ax (160 MHz, MCS8, 99pc duty cycle)	WLAN	8.53	±9.6
10764	AAC	IEEE 802.11ax (160 MHz, MCS9, 99pc duty cycle)	WLAN	8.54	±9.6
10765	AAC	IEEE 802.11ax (160 MHz, MCS10, 99pc duty cycle)	WLAN	8.54	±9.6
10766	AAC	IEEE 802.11ax (160 MHz, MCS11, 99pc duty cycle)	WLAN	8.51	±9.6
10767	AAG	5G NR (CP-OFDM, 1 RB, 5 MHz, QPSK, 15 kHz)	5G NR FR1 TDD	7.99	±9.6
10768	AAE	5G NR (CP-OFDM, 1 RB, 10 MHz, QPSK, 15 kHz)	5G NR FR1 TDD	8.01	±9.6
10769	AAD	5G NR (CP-OFDM, 1 RB, 15 MHz, QPSK, 15 kHz)	5G NR FR1 TDD	8.01	±9.6
10770	AAE	5G NR (CP-OFDM, 1 RB, 20 MHz, QPSK, 15 kHz)	5G NR FR1 TDD	8.02	±9.6
10771	AAD	5G NR (CP-OFDM, 1 RB, 25 MHz, QPSK, 15 kHz)	5G NR FR1 TDD	8.02	±9.6
10772	AAE	5G NR (CP-OFDM, 1 RB, 30 MHz, QPSK, 15 kHz)	5G NR FR1 TDD	8.23	±9.6
10773	AAF	5G NR (CP-OFDM, 1 RB, 40 MHz, QPSK, 15 kHz)	5G NR FR1 TDD	8.03	±9.6
10774	AAE	5G NR (CP-OFDM, 1 RB, 50 MHz, QPSK, 15 kHz)	5G NR FR1 TDD	8.02	±9.6
10775	AAF	5G NR (CP-OFDM, 50% RB, 5 MHz, QPSK, 15 kHz)	5G NR FR1 TDD	8.31	±9.6
10776	AAE	5G NR (CP-OFDM, 50% RB, 10 MHz, QPSK, 15 kHz)	5G NR FR1 TDD	8.30	±9.6
10777	AAC	5G NR (CP-OFDM, 50% RB, 15 MHz, QPSK, 15 kHz)	5G NR FR1 TDD	8.30	±9.6
10778	AAE	5G NR (CP-OFDM, 50% RB, 20 MHz, QPSK, 15 kHz)	5G NR FR1 TDD	8.34	±9.6
10779	AAC	5G NR (CP-OFDM, 50% RB, 25 MHz, QPSK, 15 kHz)	5G NR FR1 TDD	8.42	±9.6
10780	AAE	5G NR (CP-OFDM, 50% RB, 30 MHz, QPSK, 15 kHz)	5G NR FR1 TDD	8.38	±9.6
10781	AAF	5G NR (CP-OFDM, 50% RB, 40 MHz, QPSK, 15 kHz)	5G NR FR1 TDD	8.38	±9.6
10782	AAE	5G NR (CP-OFDM, 50% RB, 50 MHz, QPSK, 15 kHz)	5G NR FR1 TDD	8.43	±9.6
10783	AAG	5G NR (CP-OFDM, 100% RB, 5 MHz, QPSK, 15 kHz)	5G NR FR1 TDD	8.31	±9.6
10784	AAE	5G NR (CP-OFDM, 100% RB, 10 MHz, QPSK, 15 kHz)	5G NR FR1 TDD	8.29	±9.6
10785	AAD	5G NR (CP-OFDM, 100% RB, 15 MHz, QPSK, 15 kHz)	5G NR FR1 TDD	8.40	±9.6
10786	AAE	5G NR (CP-OFDM, 100% RB, 20 MHz, QPSK, 15 kHz)	5G NR FR1 TDD	8.35	±9.6
10787	AAD	5G NR (CP-OFDM, 100% RB, 25 MHz, QPSK, 15 kHz)	5G NR FR1 TDD	8.44	±9.6
10788	AAE	5G NR (CP-OFDM, 100% RB, 30 MHz, QPSK, 15 kHz)	5G NR FR1 TDD	8.39	±9.6
10789	AAF	5G NR (CP-OFDM, 100% RB, 40 MHz, QPSK, 15 kHz)	5G NR FR1 TDD	8.37	±9.6
10790	AAE	5G NR (CP-OFDM, 100% RB, 50 MHz, QPSK, 15 kHz)	5G NR FR1 TDD	8.39	±9.6
10791	AAG	5G NR (CP-OFDM, 1 RB, 5 MHz, QPSK, 30 kHz)	5G NR FR1 TDD	7.83	±9.6
10792	AAE	5G NR (CP-OFDM, 1 RB, 10 MHz, QPSK, 30 kHz)	5G NR FR1 TDD	7.92	±9.6
10793	AAD	5G NR (CP-OFDM, 1 RB, 15 MHz, QPSK, 30 kHz)	5G NR FR1 TDD	7.95	±9.6
10794	AAE	5G NR (CP-OFDM, 1 RB, 20 MHz, QPSK, 30 kHz)	5G NR FR1 TDD	7.82	±9.6
10795	AAD	5G NR (CP-OFDM, 1 RB, 25 MHz, QPSK, 30 kHz)	5G NR FR1 TDD	7.84	±9.6
10796	AAE	5G NR (CP-OFDM, 1 RB, 30 MHz, QPSK, 30 kHz)	5G NR FR1 TDD	7.82	±9.6
10797	AAF	5G NR (CP-OFDM, 1 RB, 40 MHz, QPSK, 30 kHz)	5G NR FR1 TDD	8.01	±9.6
10798	AAE	5G NR (CP-OFDM, 1 RB, 50 MHz, QPSK, 30 kHz)	5G NR FR1 TDD	7.89	±9.6
10799	AAF	5G NR (CP-OFDM, 1 RB, 60 MHz, QPSK, 30 kHz)	5G NR FR1 TDD	7.93	±9.6
10801	AAF	5G NR (CP-OFDM, 1 RB, 80 MHz, QPSK, 30 kHz)	5G NR FR1 TDD	7.89	±9.6
10802	AAE	5G NR (CP-OFDM, 1 RB, 90 MHz, QPSK, 30 kHz)	5G NR FR1 TDD	7.87	±9.6
10803	AAF	5G NR (CP-OFDM, 1 RB, 100 MHz, QPSK, 30 kHz)	5G NR FR1 TDD	7.93	±9.6
10805	AAE	5G NR (CP-OFDM, 50% RB, 10 MHz, QPSK, 30 kHz)	5G NR FR1 TDD	8.34	±9.6
10806	AAD	5G NR (CP-OFDM, 50% RB, 15 MHz, QPSK, 30 kHz)	5G NR FR1 TDD	8.37	±9.6
10809	AAE	5G NR (CP-OFDM, 50% RB, 30 MHz, QPSK, 30 kHz)	5G NR FR1 TDD	8.34	±9.6
10810	AAF	5G NR (CP-OFDM, 50% RB, 40 MHz, QPSK, 30 kHz)	5G NR FR1 TDD	8.34	±9.6
10812	AAF	5G NR (CP-OFDM, 50% RB, 60 MHz, QPSK, 30 kHz)	5G NR FR1 TDD	8.35	±9.6
10817	AAG	5G NR (CP-OFDM, 100% RB, 5 MHz, QPSK, 30 kHz)	5G NR FR1 TDD	8.35	±9.6
10818	AAE	5G NR (CP-OFDM, 100% RB, 10 MHz, QPSK, 30 kHz)	5G NR FR1 TDD	8.34	±9.6
10819	AAD	5G NR (CP-OFDM, 100% RB, 15 MHz, QPSK, 30 kHz)	5G NR FR1 TDD	8.33	±9.6
10820	AAE	5G NR (CP-OFDM, 100% RB, 20 MHz, QPSK, 30 kHz)	5G NR FR1 TDD	8.30	±9.6
10821	AAD	5G NR (CP-OFDM, 100% RB, 25 MHz, QPSK, 30 kHz)	5G NR FR1 TDD	8.41	±9.6
10822	AAE	5G NR (CP-OFDM, 100% RB, 30 MHz, QPSK, 30 kHz)	5G NR FR1 TDD	8.41	±9.6
10823	AAF	5G NR (CP-OFDM, 100% RB, 40 MHz, QPSK, 30 kHz)	5G NR FR1 TDD	8.36	±9.6
10824	AAE	5G NR (CP-OFDM, 100% RB, 50 MHz, QPSK, 30 kHz)	5G NR FR1 TDD	8.39	±9.6
10825	AAF	5G NR (CP-OFDM, 100% RB, 60 MHz, QPSK, 30 kHz)	5G NR FR1 TDD	8.41	±9.6
10827	AAF	5G NR (CP-OFDM, 100% RB, 80 MHz, QPSK, 30 kHz)	5G NR FR1 TDD	8.42	±9.6
10828	AAE	5G NR (CP-OFDM, 100% RB, 90 MHz, QPSK, 30 kHz)	5G NR FR1 TDD	8.43	±9.6

UID	Rev	Communication System Name	Group	PAR (dB)	Unc^E $k=2$
10829	AAF	5G NR (CP-OFDM, 100% RB, 100 MHz, QPSK, 30 kHz)	5G NR FR1 TDD	8.40	±9.6
10830	AAE	5G NR (CP-OFDM, 1 RB, 10 MHz, QPSK, 60 kHz)	5G NR FR1 TDD	7.63	±9.6
10831	AAD	5G NR (CP-OFDM, 1 RB, 15 MHz, QPSK, 60 kHz)	5G NR FR1 TDD	7.73	±9.6
10832	AAE	5G NR (CP-OFDM, 1 RB, 20 MHz, QPSK, 60 kHz)	5G NR FR1 TDD	7.74	±9.6
10833	AAD	5G NR (CP-OFDM, 1 RB, 25 MHz, QPSK, 60 kHz)	5G NR FR1 TDD	7.70	±9.6
10834	AAE	5G NR (CP-OFDM, 1 RB, 30 MHz, QPSK, 60 kHz)	5G NR FR1 TDD	7.75	±9.6
10835	AAF	5G NR (CP-OFDM, 1 RB, 40 MHz, QPSK, 60 kHz)	5G NR FR1 TDD	7.70	±9.6
10836	AAE	5G NR (CP-OFDM, 1 RB, 50 MHz, QPSK, 60 kHz)	5G NR FR1 TDD	7.66	±9.6
10837	AAF	5G NR (CP-OFDM, 1 RB, 60 MHz, QPSK, 60 kHz)	5G NR FR1 TDD	7.68	±9.6
10839	AAF	5G NR (CP-OFDM, 1 RB, 80 MHz, QPSK, 60 kHz)	5G NR FR1 TDD	7.70	±9.6
10840	AAE	5G NR (CP-OFDM, 1 RB, 90 MHz, QPSK, 60 kHz)	5G NR FR1 TDD	7.67	±9.6
10841	AAF	5G NR (CP-OFDM, 1 RB, 100 MHz, QPSK, 60 kHz)	5G NR FR1 TDD	7.71	±9.6
10843	AAD	5G NR (CP-OFDM, 50% RB, 15 MHz, QPSK, 60 kHz)	5G NR FR1 TDD	8.49	±9.6
10844	AAE	5G NR (CP-OFDM, 50% RB, 20 MHz, QPSK, 60 kHz)	5G NR FR1 TDD	8.34	±9.6
10846	AAE	5G NR (CP-OFDM, 50% RB, 30 MHz, QPSK, 60 kHz)	5G NR FR1 TDD	8.41	±9.6
10854	AAE	5G NR (CP-OFDM, 100% RB, 10 MHz, QPSK, 60 kHz)	5G NR FR1 TDD	8.34	±9.6
10855	AAD	5G NR (CP-OFDM, 100% RB, 15 MHz, QPSK, 60 kHz)	5G NR FR1 TDD	8.36	±9.6
10856	AAE	5G NR (CP-OFDM, 100% RB, 20 MHz, QPSK, 60 kHz)	5G NR FR1 TDD	8.37	±9.6
10857	AAD	5G NR (CP-OFDM, 100% RB, 25 MHz, QPSK, 60 kHz)	5G NR FR1 TDD	8.35	±9.6
10858	AAE	5G NR (CP-OFDM, 100% RB, 30 MHz, QPSK, 60 kHz)	5G NR FR1 TDD	8.36	±9.6
10859	AAF	5G NR (CP-OFDM, 100% RB, 40 MHz, QPSK, 60 kHz)	5G NR FR1 TDD	8.34	±9.6
10860	AAE	5G NR (CP-OFDM, 100% RB, 50 MHz, QPSK, 60 kHz)	5G NR FR1 TDD	8.41	±9.6
10861	AAF	5G NR (CP-OFDM, 100% RB, 60 MHz, QPSK, 60 kHz)	5G NR FR1 TDD	8.40	±9.6
10863	AAF	5G NR (CP-OFDM, 100% RB, 80 MHz, QPSK, 60 kHz)	5G NR FR1 TDD	8.41	±9.6
10864	AAE	5G NR (CP-OFDM, 100% RB, 90 MHz, QPSK, 60 kHz)	5G NR FR1 TDD	8.37	±9.6
10865	AAF	5G NR (CP-OFDM, 100% RB, 100 MHz, QPSK, 60 kHz)	5G NR FR1 TDD	8.41	±9.6
10866	AAF	5G NR (DFT-s-OFDM, 1 RB, 100 MHz, QPSK, 30 kHz)	5G NR FR1 TDD	5.68	±9.6
10868	AAF	5G NR (DFT-s-OFDM, 100% RB, 100 MHz, QPSK, 30 kHz)	5G NR FR1 TDD	5.89	±9.6
10869	AAE	5G NR (DFT-s-OFDM, 1 RB, 100 MHz, QPSK, 120 kHz)	5G NR FR2 TDD	5.75	±9.6
10870	AAE	5G NR (DFT-s-OFDM, 100% RB, 100 MHz, QPSK, 120 kHz)	5G NR FR2 TDD	5.86	±9.6
10871	AAE	5G NR (DFT-s-OFDM, 1 RB, 100 MHz, 16QAM, 120 kHz)	5G NR FR2 TDD	5.75	±9.6
10872	AAE	5G NR (DFT-s-OFDM, 100% RB, 100 MHz, 16QAM, 120 kHz)	5G NR FR2 TDD	6.52	±9.6
10873	AAE	5G NR (DFT-s-OFDM, 1 RB, 100 MHz, 64QAM, 120 kHz)	5G NR FR2 TDD	6.61	±9.6
10874	AAE	5G NR (DFT-s-OFDM, 100% RB, 100 MHz, 64QAM, 120 kHz)	5G NR FR2 TDD	6.65	±9.6
10875	AAE	5G NR (CP-OFDM, 1 RB, 100 MHz, QPSK, 120 kHz)	5G NR FR2 TDD	7.78	±9.6
10876	AAE	5G NR (CP-OFDM, 100% RB, 100 MHz, QPSK, 120 kHz)	5G NR FR2 TDD	8.39	±9.6
10877	AAE	5G NR (CP-OFDM, 1 RB, 100 MHz, 16QAM, 120 kHz)	5G NR FR2 TDD	7.95	±9.6
10878	AAE	5G NR (CP-OFDM, 100% RB, 100 MHz, 16QAM, 120 kHz)	5G NR FR2 TDD	8.41	±9.6
10879	AAE	5G NR (CP-OFDM, 1 RB, 100 MHz, 64QAM, 120 kHz)	5G NR FR2 TDD	8.12	±9.6
10880	AAE	5G NR (CP-OFDM, 100% RB, 100 MHz, 64QAM, 120 kHz)	5G NR FR2 TDD	8.38	±9.6
10881	AAE	5G NR (DFT-s-OFDM, 1 RB, 50 MHz, QPSK, 120 kHz)	5G NR FR2 TDD	5.75	±9.6
10882	AAE	5G NR (DFT-s-OFDM, 100% RB, 50 MHz, QPSK, 120 kHz)	5G NR FR2 TDD	5.96	±9.6
10883	AAE	5G NR (DFT-s-OFDM, 1 RB, 50 MHz, 16QAM, 120 kHz)	5G NR FR2 TDD	6.57	±9.6
10884	AAE	5G NR (DFT-s-OFDM, 100% RB, 50 MHz, 16QAM, 120 kHz)	5G NR FR2 TDD	6.53	±9.6
10885	AAE	5G NR (DFT-s-OFDM, 1 RB, 50 MHz, 64QAM, 120 kHz)	5G NR FR2 TDD	6.61	±9.6
10886	AAE	5G NR (DFT-s-OFDM, 100% RB, 50 MHz, 64QAM, 120 kHz)	5G NR FR2 TDD	6.65	±9.6
10887	AAE	5G NR (CP-OFDM, 1 RB, 50 MHz, QPSK, 120 kHz)	5G NR FR2 TDD	7.78	±9.6
10888	AAE	5G NR (CP-OFDM, 100% RB, 50 MHz, QPSK, 120 kHz)	5G NR FR2 TDD	8.35	±9.6
10889	AAE	5G NR (CP-OFDM, 1 RB, 50 MHz, 16QAM, 120 kHz)	5G NR FR2 TDD	8.02	±9.6
10890	AAE	5G NR (CP-OFDM, 100% RB, 50 MHz, 16QAM, 120 kHz)	5G NR FR2 TDD	8.40	±9.6
10891	AAE	5G NR (CP-OFDM, 1 RB, 50 MHz, 64QAM, 120 kHz)	5G NR FR2 TDD	8.13	±9.6
10892	AAE	5G NR (CP-OFDM, 100% RB, 50 MHz, 64QAM, 120 kHz)	5G NR FR2 TDD	8.41	±9.6
10897	AAE	5G NR (DFT-s-OFDM, 1 RB, 5 MHz, QPSK, 30 kHz)	5G NR FR1 TDD	5.66	±9.6
10898	AAC	5G NR (DFT-s-OFDM, 1 RB, 10 MHz, QPSK, 30 kHz)	5G NR FR1 TDD	5.67	±9.6
10899	AAB	5G NR (DFT-s-OFDM, 1 RB, 15 MHz, QPSK, 30 kHz)	5G NR FR1 TDD	5.67	±9.6
10900	AAC	5G NR (DFT-s-OFDM, 1 RB, 20 MHz, QPSK, 30 kHz)	5G NR FR1 TDD	5.68	±9.6
10901	AAB	5G NR (DFT-s-OFDM, 1 RB, 25 MHz, QPSK, 30 kHz)	5G NR FR1 TDD	5.68	±9.6
10902	AAC	5G NR (DFT-s-OFDM, 1 RB, 30 MHz, QPSK, 30 kHz)	5G NR FR1 TDD	5.68	±9.6
10903	AAD	5G NR (DFT-s-OFDM, 1 RB, 40 MHz, QPSK, 30 kHz)	5G NR FR1 TDD	5.68	±9.6
10904	AAC	5G NR (DFT-s-OFDM, 1 RB, 50 MHz, QPSK, 30 kHz)	5G NR FR1 TDD	5.68	±9.6
10905	AAD	5G NR (DFT-s-OFDM, 1 RB, 60 MHz, QPSK, 30 kHz)	5G NR FR1 TDD	5.68	±9.6
10906	AAD	5G NR (DFT-s-OFDM, 1 RB, 80 MHz, QPSK, 30 kHz)	5G NR FR1 TDD	5.68	±9.6
10907	AAE	5G NR (DFT-s-OFDM, 50% RB, 5 MHz, QPSK, 30 kHz)	5G NR FR1 TDD	5.78	±9.6
10908	AAC	5G NR (DFT-s-OFDM, 50% RB, 10 MHz, QPSK, 30 kHz)	5G NR FR1 TDD	5.93	±9.6
10909	AAB	5G NR (DFT-s-OFDM, 50% RB, 15 MHz, QPSK, 30 kHz)	5G NR FR1 TDD	5.96	±9.6
10910	AAC	5G NR (DFT-s-OFDM, 50% RB, 20 MHz, QPSK, 30 kHz)	5G NR FR1 TDD	5.83	±9.6

UID	Rev	Communication System Name	Group	PAR (dB)	Unc^E $k = 2$
10911	AAB	5G NR (DFT-s-OFDM, 50% RB, 25 MHz, QPSK, 30 kHz)	5G NR FR1 TDD	5.93	±9.6
10912	AAC	5G NR (DFT-s-OFDM, 50% RB, 30 MHz, QPSK, 30 kHz)	5G NR FR1 TDD	5.84	±9.6
10913	AAD	5G NR (DFT-s-OFDM, 50% RB, 40 MHz, QPSK, 30 kHz)	5G NR FR1 TDD	5.84	±9.6
10914	AAC	5G NR (DFT-s-OFDM, 50% RB, 50 MHz, QPSK, 30 kHz)	5G NR FR1 TDD	5.85	±9.6
10915	AAD	5G NR (DFT-s-OFDM, 50% RB, 60 MHz, QPSK, 30 kHz)	5G NR FR1 TDD	5.83	±9.6
10916	AAD	5G NR (DFT-s-OFDM, 50% RB, 80 MHz, QPSK, 30 kHz)	5G NR FR1 TDD	5.87	±9.6
10917	AAD	5G NR (DFT-s-OFDM, 50% RB, 100 MHz, QPSK, 30 kHz)	5G NR FR1 TDD	5.94	±9.6
10918	AAE	5G NR (DFT-s-OFDM, 100% RB, 5 MHz, QPSK, 30 kHz)	5G NR FR1 TDD	5.86	±9.6
10919	AAC	5G NR (DFT-s-OFDM, 100% RB, 10 MHz, QPSK, 30 kHz)	5G NR FR1 TDD	5.86	±9.6
10920	AAB	5G NR (DFT-s-OFDM, 100% RB, 15 MHz, QPSK, 30 kHz)	5G NR FR1 TDD	5.87	±9.6
10921	AAC	5G NR (DFT-s-OFDM, 100% RB, 20 MHz, QPSK, 30 kHz)	5G NR FR1 TDD	5.84	±9.6
10922	AAB	5G NR (DFT-s-OFDM, 100% RB, 25 MHz, QPSK, 30 kHz)	5G NR FR1 TDD	5.82	±9.6
10923	AAC	5G NR (DFT-s-OFDM, 100% RB, 30 MHz, QPSK, 30 kHz)	5G NR FR1 TDD	5.84	±9.6
10924	AAD	5G NR (DFT-s-OFDM, 100% RB, 40 MHz, QPSK, 30 kHz)	5G NR FR1 TDD	5.84	±9.6
10925	AAC	5G NR (DFT-s-OFDM, 100% RB, 50 MHz, QPSK, 30 kHz)	5G NR FR1 TDD	5.95	±9.6
10926	AAD	5G NR (DFT-s-OFDM, 100% RB, 60 MHz, QPSK, 30 kHz)	5G NR FR1 TDD	5.84	±9.6
10927	AAD	5G NR (DFT-s-OFDM, 100% RB, 80 MHz, QPSK, 30 kHz)	5G NR FR1 TDD	5.94	±9.6
10928	AAD	5G NR (DFT-s-OFDM, 1 RB, 5 MHz, QPSK, 15 kHz)	5G NR FR1 FDD	5.52	±9.6
10929	AAD	5G NR (DFT-s-OFDM, 1 RB, 10 MHz, QPSK, 15 kHz)	5G NR FR1 FDD	5.52	±9.6
10930	AAC	5G NR (DFT-s-OFDM, 1 RB, 15 MHz, QPSK, 15 kHz)	5G NR FR1 FDD	5.52	±9.6
10931	AAC	5G NR (DFT-s-OFDM, 1 RB, 20 MHz, QPSK, 15 kHz)	5G NR FR1 FDD	5.51	±9.6
10932	AAC	5G NR (DFT-s-OFDM, 1 RB, 25 MHz, QPSK, 15 kHz)	5G NR FR1 FDD	5.51	±9.6
10933	AAC	5G NR (DFT-s-OFDM, 1 RB, 30 MHz, QPSK, 15 kHz)	5G NR FR1 FDD	5.51	±9.6
10934	AAC	5G NR (DFT-s-OFDM, 1 RB, 40 MHz, QPSK, 15 kHz)	5G NR FR1 FDD	5.51	±9.6
10935	AAD	5G NR (DFT-s-OFDM, 1 RB, 50 MHz, QPSK, 15 kHz)	5G NR FR1 FDD	5.51	±9.6
10936	AAD	5G NR (DFT-s-OFDM, 50% RB, 5 MHz, QPSK, 15 kHz)	5G NR FR1 FDD	5.90	±9.6
10937	AAD	5G NR (DFT-s-OFDM, 50% RB, 10 MHz, QPSK, 15 kHz)	5G NR FR1 FDD	5.77	±9.6
10938	AAC	5G NR (DFT-s-OFDM, 50% RB, 15 MHz, QPSK, 15 kHz)	5G NR FR1 FDD	5.90	±9.6
10939	AAC	5G NR (DFT-s-OFDM, 50% RB, 20 MHz, QPSK, 15 kHz)	5G NR FR1 FDD	5.82	±9.6
10940	AAC	5G NR (DFT-s-OFDM, 50% RB, 25 MHz, QPSK, 15 kHz)	5G NR FR1 FDD	5.89	±9.6
10941	AAC	5G NR (DFT-s-OFDM, 50% RB, 30 MHz, QPSK, 15 kHz)	5G NR FR1 FDD	5.83	±9.6
10942	AAC	5G NR (DFT-s-OFDM, 50% RB, 40 MHz, QPSK, 15 kHz)	5G NR FR1 FDD	5.85	±9.6
10943	AAD	5G NR (DFT-s-OFDM, 50% RB, 50 MHz, QPSK, 15 kHz)	5G NR FR1 FDD	5.95	±9.6
10944	AAD	5G NR (DFT-s-OFDM, 100% RB, 5 MHz, QPSK, 15 kHz)	5G NR FR1 FDD	5.81	±9.6
10945	AAD	5G NR (DFT-s-OFDM, 100% RB, 10 MHz, QPSK, 15 kHz)	5G NR FR1 FDD	5.85	±9.6
10946	AAC	5G NR (DFT-s-OFDM, 100% RB, 15 MHz, QPSK, 15 kHz)	5G NR FR1 FDD	5.83	±9.6
10947	AAC	5G NR (DFT-s-OFDM, 100% RB, 20 MHz, QPSK, 15 kHz)	5G NR FR1 FDD	5.87	±9.6
10948	AAC	5G NR (DFT-s-OFDM, 100% RB, 25 MHz, QPSK, 15 kHz)	5G NR FR1 FDD	5.94	±9.6
10949	AAC	5G NR (DFT-s-OFDM, 100% RB, 30 MHz, QPSK, 15 kHz)	5G NR FR1 FDD	5.87	±9.6
10950	AAC	5G NR (DFT-s-OFDM, 100% RB, 40 MHz, QPSK, 15 kHz)	5G NR FR1 FDD	5.94	±9.6
10951	AAD	5G NR (DFT-s-OFDM, 100% RB, 50 MHz, QPSK, 15 kHz)	5G NR FR1 FDD	5.92	±9.6
10952	AAA	5G NR DL (CP-OFDM, TM 3.1, 5 MHz, 64-QAM, 15 kHz)	5G NR FR1 FDD	8.25	±9.6
10953	AAA	5G NR DL (CP-OFDM, TM 3.1, 10 MHz, 64-QAM, 15 kHz)	5G NR FR1 FDD	8.15	±9.6
10954	AAA	5G NR DL (CP-OFDM, TM 3.1, 15 MHz, 64-QAM, 15 kHz)	5G NR FR1 FDD	8.23	±9.6
10955	AAA	5G NR DL (CP-OFDM, TM 3.1, 20 MHz, 64-QAM, 15 kHz)	5G NR FR1 FDD	8.42	±9.6
10956	AAA	5G NR DL (CP-OFDM, TM 3.1, 5 MHz, 64-QAM, 30 kHz)	5G NR FR1 FDD	8.14	±9.6
10957	AAA	5G NR DL (CP-OFDM, TM 3.1, 10 MHz, 64-QAM, 30 kHz)	5G NR FR1 FDD	8.31	±9.6
10958	AAA	5G NR DL (CP-OFDM, TM 3.1, 15 MHz, 64-QAM, 30 kHz)	5G NR FR1 FDD	8.61	±9.6
10959	AAA	5G NR DL (CP-OFDM, TM 3.1, 20 MHz, 64-QAM, 30 kHz)	5G NR FR1 FDD	8.33	±9.6
10960	AAE	5G NR DL (CP-OFDM, TM 3.1, 5 MHz, 64-QAM, 15 kHz)	5G NR FR1 TDD	9.32	±9.6
10961	AAC	5G NR DL (CP-OFDM, TM 3.1, 10 MHz, 64-QAM, 15 kHz)	5G NR FR1 TDD	9.36	±9.6
10962	AAB	5G NR DL (CP-OFDM, TM 3.1, 15 MHz, 64-QAM, 15 kHz)	5G NR FR1 TDD	9.40	±9.6
10963	AAC	5G NR DL (CP-OFDM, TM 3.1, 20 MHz, 64-QAM, 15 kHz)	5G NR FR1 TDD	9.55	±9.6
10964	AAE	5G NR DL (CP-OFDM, TM 3.1, 5 MHz, 64-QAM, 30 kHz)	5G NR FR1 TDD	9.29	±9.6
10965	AAC	5G NR DL (CP-OFDM, TM 3.1, 10 MHz, 64-QAM, 30 kHz)	5G NR FR1 TDD	9.37	±9.6
10966	AAB	5G NR DL (CP-OFDM, TM 3.1, 15 MHz, 64-QAM, 30 kHz)	5G NR FR1 TDD	9.55	±9.6
10967	AAC	5G NR DL (CP-OFDM, TM 3.1, 20 MHz, 64-QAM, 30 kHz)	5G NR FR1 TDD	9.42	±9.6
10968	AAD	5G NR DL (CP-OFDM, TM 3.1, 100 MHz, 64-QAM, 30 kHz)	5G NR FR1 TDD	9.49	±9.6
10972	AAC	5G NR (CP-OFDM, 1 RB, 20 MHz, QPSK, 15 kHz)	5G NR FR1 TDD	11.59	±9.6
10973	AAD	5G NR (DFT-s-OFDM, 1 RB, 100 MHz, QPSK, 30 kHz)	5G NR FR1 TDD	9.06	±9.6
10974	AAD	5G NR (CP-OFDM, 100% RB, 100 MHz, 256-QAM, 30 kHz)	5G NR FR1 TDD	10.28	±9.6
10978	AAA	ULLA BDR	ULLA	1.16	±9.6
10979	AAA	ULLA HDR4	ULLA	8.58	±9.6
10980	AAA	ULLA HDR8	ULLA	10.32	±9.6
10981	AAA	ULLA HDRp4	ULLA	3.19	±9.6
10982	AAA	ULLA HDRp8	ULLA	3.43	±9.6

UID	Rev	Communication System Name	Group	PAR (dB)	Unc[E] $k=2$
10983	AAC	5G NR DL (CP-OFDM, TM 3.1, 40 MHz, 64-QAM, 15 kHz)	5G NR FR1 TDD	9.31	±9.6
10984	AAB	5G NR DL (CP-OFDM, TM 3.1, 50 MHz, 64-QAM, 15 kHz)	5G NR FR1 TDD	9.42	±9.6
10985	AAC	5G NR DL (CP-OFDM, TM 3.1, 40 MHz, 64-QAM, 30 kHz)	5G NR FR1 TDD	9.54	±9.6
10986	AAB	5G NR DL (CP-OFDM, TM 3.1, 50 MHz, 64-QAM, 30 kHz)	5G NR FR1 TDD	9.50	±9.6
10987	AAC	5G NR DL (CP-OFDM, TM 3.1, 60 MHz, 64-QAM, 30 kHz)	5G NR FR1 TDD	9.53	±9.6
10988	AAB	5G NR DL (CP-OFDM, TM 3.1, 70 MHz, 64-QAM, 30 kHz)	5G NR FR1 TDD	9.38	±9.6
10989	AAC	5G NR DL (CP-OFDM, TM 3.1, 80 MHz, 64-QAM, 30 kHz)	5G NR FR1 TDD	9.33	±9.6
10990	AAB	5G NR DL (CP-OFDM, TM 3.1, 90 MHz, 64-QAM, 30 kHz)	5G NR FR1 TDD	9.52	±9.6
11003	AAA	5G NR DL (CP-OFDM, TM 3.1, 30 MHz, 64-QAM, 15 kHz)	5G NR FR1 TDD	10.24	±9.6
11004	AAA	5G NR DL (CP-OFDM, TM 3.1, 30 MHz, 64-QAM, 30 kHz)	5G NR FR1 TDD	10.73	±9.6
11005	AAA	5G NR DL (CP-OFDM, TM 3.1, 25 MHz, 64-QAM, 15 kHz)	5G NR FR1 FDD	8.70	±9.6
11006	AAA	5G NR DL (CP-OFDM, TM 3.1, 30 MHz, 64-QAM, 15 kHz)	5G NR FR1 FDD	8.55	±9.6
11007	AAA	5G NR DL (CP-OFDM, TM 3.1, 40 MHz, 64-QAM, 15 kHz)	5G NR FR1 FDD	8.46	±9.6
11008	AAA	5G NR DL (CP-OFDM, TM 3.1, 50 MHz, 64-QAM, 15 kHz)	5G NR FR1 FDD	8.51	±9.6
11009	AAA	5G NR DL (CP-OFDM, TM 3.1, 25 MHz, 64-QAM, 30 kHz)	5G NR FR1 FDD	8.76	±9.6
11010	AAA	5G NR DL (CP-OFDM, TM 3.1, 30 MHz, 64-QAM, 30 kHz)	5G NR FR1 FDD	8.95	±9.6
11011	AAA	5G NR DL (CP-OFDM, TM 3.1, 40 MHz, 64-QAM, 30 kHz)	5G NR FR1 FDD	8.96	±9.6
11012	AAA	5G NR DL (CP-OFDM, TM 3.1, 50 MHz, 64-QAM, 30 kHz)	5G NR FR1 FDD	8.68	±9.6
11013	AAB	IEEE 802.11be (320 MHz, MCS1, 99pc duty cycle)	WLAN	8.47	±9.6
11014	AAB	IEEE 802.11be (320 MHz, MCS2, 99pc duty cycle)	WLAN	8.45	±9.6
11015	AAB	IEEE 802.11be (320 MHz, MCS3, 99pc duty cycle)	WLAN	8.44	±9.6
11016	AAB	IEEE 802.11be (320 MHz, MCS4, 99pc duty cycle)	WLAN	8.44	±9.6
11017	AAB	IEEE 802.11be (320 MHz, MCS5, 99pc duty cycle)	WLAN	8.41	±9.6
11018	AAB	IEEE 802.11be (320 MHz, MCS6, 99pc duty cycle)	WLAN	8.40	±9.6
11019	AAB	IEEE 802.11be (320 MHz, MCS7, 99pc duty cycle)	WLAN	8.29	±9.6
11020	AAB	IEEE 802.11be (320 MHz, MCS8, 99pc duty cycle)	WLAN	8.27	±9.6
11021	AAB	IEEE 802.11be (320 MHz, MCS9, 99pc duty cycle)	WLAN	8.46	±9.6
11022	AAB	IEEE 802.11be (320 MHz, MCS10, 99pc duty cycle)	WLAN	8.36	±9.6
11023	AAB	IEEE 802.11be (320 MHz, MCS11, 99pc duty cycle)	WLAN	8.09	±9.6
11024	AAB	IEEE 802.11be (320 MHz, MCS12, 99pc duty cycle)	WLAN	8.42	±9.6
11025	AAB	IEEE 802.11be (320 MHz, MCS13, 99pc duty cycle)	WLAN	8.37	±9.6
11026	AAB	IEEE 802.11be (320 MHz, MCS0, 99pc duty cycle)	WLAN	8.39	±9.6

[E] Uncertainty is determined using the max. deviation from linear response applying rectangular distribution and is expressed for the square of the field value.