MINOLTA®

ProShot
MN67Z

MN67Z User Manual

BEFORE YOU START

Declaration of Conformity

Responsible Party: Elite Brands Inc.

Address: 40 Wall St, Flr 61, New York, NY 10005 USA

Company Website: www.elitebrands.com ;
www.minoltadigital.com

For Customers in the U.S.A.

Federal Communication Commission Interference Statement

This device complies with Part 15 of the FCC Rules. Operation is subject to the following two conditions: (1) This device may not cause harmful interference, and (2) this device must accept any interference received, including interference that may cause undesired operation.

This equipment has been tested and found to comply with the limits for a Class B digital device, pursuant to Part 15 of the FCC Rules. These limits are designed to provide reasonable protection against harmful interference in a residential installation. This equipment generates, uses and can radiate radio frequency energy and, if not installed and used in accordance with the instructions, may cause harmful interference to radio communications. However, there is no guarantee that interference will not occur in a particular installation. If this equipment does cause harmful interference to radio or television reception, which can be determined by turning the equipment off and on, the user is encouraged to try to correct the interference by one of the following measures:

- Reorient or relocate the receiving antenna.
- Increase the separation between the equipment and receiver.
- Connect the equipment into an outlet on a circuit different from that to which the receiver is connected.
- Consult the dealer or an experienced radio/TV technician for help.

FCC Caution: Any changes or modifications not expressly approved by the party responsible for compliance could void the user's authority to operate this equipment.

This transmitter must not be co-located or operating in conjunction with any other antenna or transmitter.

Radiation Exposure Statement:

This product complies with the FCC portable RF exposure limit set forth for an uncontrolled environment and is safe for intended operation as described in this manual. Additional RF exposure reduction can be achieved if the product can be kept as far as possible from the user body or set the device to lower output power if such function is available.

About this Manual

Thank you for purchasing this MINOLTA MN67Z Digital Camera. Please read this manual carefully and keep it in a safe place for future reference.

- Elite Brands Inc. reserves all rights of this document. No part of this published manual may be reproduced, transmitted, transcribed, stored in a retrieval system or translated into any language or computer language, in any form, by any means, without the prior written permission of Elite Brands Inc.
- All trademarks mentioned in this manual are used for identification purposes only and are properties of their respective owners and holders.
- This manual provides you with instructions on how to use your new MINOLTA MN67Z Digital Camera. Every effort has been made to ensure that the contents of this manual are accurate; however Elite Brands Inc. reserves the right to make changes without notice.
- Throughout this manual, the following symbols are used to help you locate information quickly and easily:

  Indicates useful information.

- The following symbols may be used throughout this manual to facilitate your understanding of how to operate the camera:

  [Item properties]: The optional properties in the camera interface are indicated by the [ ] symbol.

Safety Notes for this Camera

- Do not drop the camera or allow it to hit solid objects.
- Do not attempt to disassemble or repair the camera.
- Do not use or store the camera in dusty places or on a beach to help prevent dust or sand from entering the camera, causing possible damage.
- Do not use or store the camera in a hot environment or in direct sunlight.
- Do not use or store the camera near powerful magnetic fields, such as a magnet or transformer.
- Avoid touching the lens of the camera.
- Do not expose the camera to direct sunlight for a long period of time.
- To prevent the camera from being damaged by moisture, do not use or store the camera in very humid environments, such as in rain or near bodies of water.
- If water accidentally comes in contact with the camera, turn the camera off immediately, remove the battery and the memory card and dry it completely within 24 hours.
- When you take the camera from a cold environment to a warmer environment, condensation may occur. Please wait for a reasonable period of time before you turn the camera on.
- Before you remove the battery and memory card, the camera should be turned off.

- When you clean the body of the camera, do not use abrasive, alcohol-based or organic cleansers or solvents.
- Use a professional lens cleaning cloth and appropriate cleaner to wipe and clean the lens.
- Download your photos and remove the memory card when you are going to store the camera for long periods of time.
- If this camera is not in use for a long period of time, please keep it in a dry and clean storage location.
- Our company will not pay compensation for any failure of playback including: pictures or videos damaged or unrecoverable by improper operation.

Safety Notes for Battery

- Please use a battery that is the same type as the one included.
- Please use the attached charger to charge the battery.
- If battery fluid leaks inside the camera, contact our customer service department immediately. If battery fluid leaks onto your skin, rinse your skin immediately with clean water and seek immediate medical attention.
- Disposal of used batteries should be carried out in accordance with your local (national or regional) regulations.
- To prevent the battery from being damaged, do not drop the battery or allow it to hit solid objects or to be scratched by foreign objects.
- Do not let the battery come in contact with metal objects (including coins) to avoid short circuiting, discharging, excessive heat or possible leakage.
- Do not attempt to disassemble the battery.
- Do not expose the battery to water. Always keep the battery contacts dry.
- Do not heat the battery or throw it into a fire to avoid a possible explosion.
- Do not store the battery in a hot environment or in direct sunlight.
- If the battery overheats during charging or use, stop charging or use immediately. Turn off the product, remove the battery carefully, and wait until it cools down.

- When the camera is stored for a long period of time, remove the battery and keep it in a safe, dry place that is not accessible to infants and children.
- In colder environments, the performance of the battery could be noticeably reduced.
- When you install the battery, align the battery markings according to the positive and negative markings inside the camera battery compartment. Never force the battery into the battery compartment.

Safety Notes for SD Memory Card

- We highly suggest buying only well-known, name brand memory cards to ensure peak performance and reliability.
- Format the memory card using the camera before you use it or insert a new one.
- Do not drop the memory card or allow it to hit solid objects to avoid damaging it.
- Do not attempt to disassemble or repair the memory card.
- Do not expose the memory card to water. Always keep it dry.
- Do not remove the memory card when the camera is turned on. Otherwise, the memory card and photo/video files could be permanently damaged.
- Do not directly edit the data on the memory card. Copy the data to your computer before you edit files.
- When the camera is stored for long periods of time, be sure to download your photos and remove the memory card. Store the memory card in a dry environment.
- Do not modify the name of the files or folders of the memory card using your computer. Modifying the file names may cause the files to not be recognized on the camera or a possible permanent error may occur.
- A photo taken with the camera will be stored in the folder that is automatically generated on the memory card. Do not store photos that are not taken using this camera in these folders as the pictures cannot be recognized during playback.
- When you insert the memory card, make sure the notch of the card matches the markings on the top of the camera card slot.

Other Safety Notes

- Do not disconnect the power or turn the camera off during the update process. Doing so may cause incorrect data to be written and the camera may not power on later.
- Do not hang the neck strap of the camera around the neck of a child.
- When using your camera on an airplane, observe the relevant rules specified by the airline and FAA regulations.
- Due to the limitations of manufacturing technology, the LCD may have a few dead or bright pixels. These pixels do no effect the quality or performance of the camera, photos or video.
- Do not expose the camera's LCD to water. In a humid environment, only wipe it with a soft, dry, cleaning cloth.
- If the LCD is damaged and the liquid crystal comes into contact with your skin, wipe your skin with a dry cloth immediately and rinse it with clean water. If liquid crystal comes into contact with your eyes, wash them with clean water at least for 15 minutes and seek immediate medical attention. If you accidentally swallow liquid crystal, rinse your mouth immediately and seek medical attention.

CONTENTS

BEFORE YOU START.....1

SAFETY NOTES 4

CONTENTS.....10

GETTING READY 14

Accessories Included 14

Installing Lens Cap and Neck Strap..15

Part Names 16

Installing Battery and SD Memory Card 19

Charging the Battery 21

Vari-Angle LCD 22

Turning Camera On and Off.....23

Set your Language, Date/Time after the First Power-On 24

Set your Language, Date/Time 24

Resetting your Language.....25

Resetting Date/Time 26

MODE OVERVIEW 27

LCD Display 27

Overview of the Screen Icons in Shooting Mode.....27

Overview of the Screen Icons in Movie Mode 29

Overview of the Screen Icons in Playback Mode 30

How to Take Pictures 31

Using the Mode Dial.....32

Face Beautifier 35

Wireless Mode 36

Scene Mode SCN.....43

Custom Settings (CS) 49

BASIC OPERATION.....51

Using EVF (Electronic View Finder)..51

Using the Zoom Function.....52

Display Setting 53
AF Area 55
Macro Mode 56
Self-Timer Mode 57
Flash Mode 58
WB (White Balance) Mode 60
Continuous Shot Mode.....62
Exposure Compensation Functions Setting 64
EV Adjustment 64
ISO Adjustment.....65
Shutter Speed Adjustment.....65
Aperture Adjustment 66
Using Quick Recording 66
“i” Button Function Menu.....67
Using the Lens Function Ring.....68
Zoom/AF Mode 68
Function Ring (Smart) Mode.....69
MF(Manual Focus) Mode.....70
PLAYBACK.....71
Viewing Photos and Videos 71
Thumbnail View.....72
Using Zoom Playback (for still pictures only).....73
Continuous Shot Group Playback.....74
Animation Panorama Play.....75
Slideshow.....76
Deleting Photos and Videos.....77
USING THE MENUS 78
Shooting Menu 78
Expo Metering.....79
OIS (Optical Image Stabilization)..79
Beautifier.....80
Select Scene.....80
Shoot Setting1.....81

Image Size.....82
Movie Size 83
Quality.....84
MF (Manual Focus) Assist 85
AF Assist Beam 86
Digital Zoom.....86
Shoot Setting 2.....87
Date Imprint 88
Quick Review.....88
Continuous AF 89
Face Detection.....89
Custom Settings 90
Function Ring (Smart).....91
Playback Menu.....92
Menu 92
Display Mode 93
Rotate 93
Color 94
HDR 95
Touch-Up 96
Resize 97
Playback Settings 97
Protect 98
Delete 98
DPOF (Digital Print Order Format) 99
Trim.....100
Play Slide Show.....100
General Settings 101
Sound Settings 102
Power Saver 102
Language.....103
World Time.....103
Date & Time 103
LCD Brightness.....103
File Settings 104

Format 105
Copy to Card.....106
File Numbering 106
Reset Settings 107
Version.....107

CONNECTION SETTINGS 108

Connecting to a Computer 108
Setting the USB Mode 108
Transferring Files to your Computer 109
Connecting to a PICTBRIDGE™ Compatible Printer 110
Setting the USB Mode 110
Connecting to your Printer 111
Using the PICTBRIDGE™ Menu 112
Print (with Date).....112
Print (without Date).....113
Print Index.....114
Print DPOF Images.....115
Exit.....115
Video System 116
Supported HDMI Connections 117
Connecting HDMI-Ready TV 117
HDMI CEC Control.....118

APPENDICES 123

Product Specifications.....123
Prompts and Warning Messages 127
Troubleshooting 132

Accessories Included

Your camera box should contain the camera model you purchased along with the following accessories. If anything is missing or appears to be damaged, please contact your retailer first or our customer service center (Based on sales in different countries or regions, the shape of the AC adapter will vary. Please subject to the actual product will prevail.)

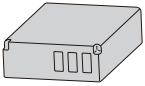

Rechargeable Li-ion Battery

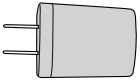

AC Adapter

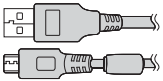

Micro USB Cable

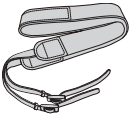

Neck Strap

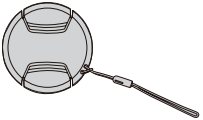

Lens Cap With Strap

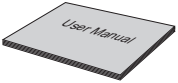

User Manual

Quick Start Guide

Warranty Card

SD Card

Pouch

Installing Lens Cap and Neck Strap

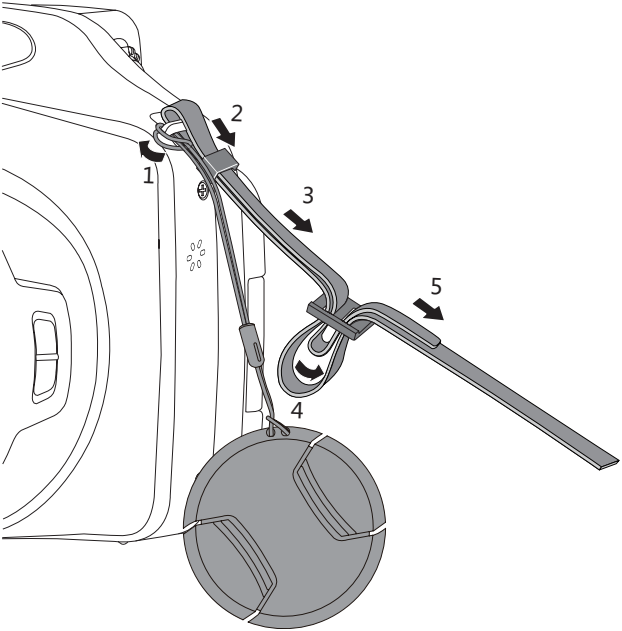

Part Names

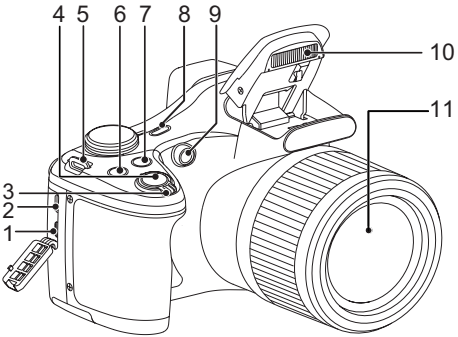

1. Micro HDMI Port
2. Micro USB Port
3. Zoom Lever
4. Shutter Button
5. Strap Eyelet
6. Exposure Compensation Button
7. Continuous Shot Button
8. Power Button
9. AF Assist Beam/Self-Timer Lamp
10. Flash Lamp
11. Lens

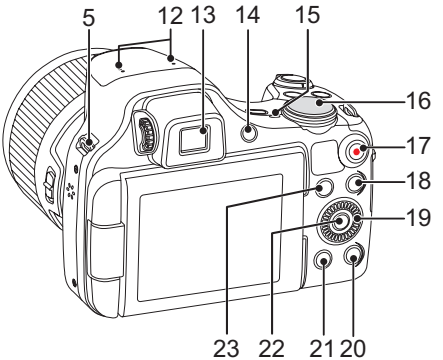

12. Microphone
13. Electronic View Finder (EVF)
14. EVF / LCD Switch Button
15. Indicator Lamp
16. Mode Dial
17. Fast Video Recording Button
18. Menu Button
19. Jog Dial
    [▲ **AF**] AF Button/Up Button
    [▼] Delete Button/Self-Timer Button/Down Button
    [◀] Macro Button/Left Button
    [▶] Flash Button/Right Button
20. Display Button
21. Playback Button
22. SET Button
23. "i" Button

Rolling the jog dial can be for fast selection instead of pressing the up/down/left/right button.

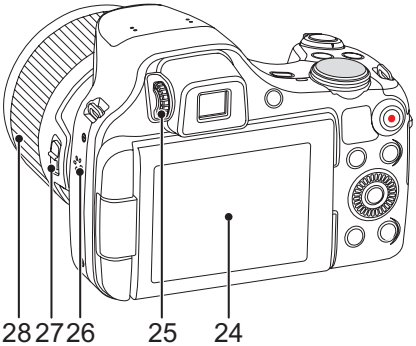

24. Vari-angle LCD
25. Diopter Adjustment Knob
26. Speaker
27. Lens Function Ring Lever
28. Lens Function Ring

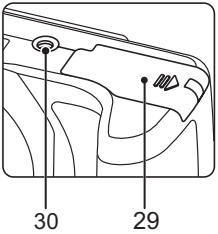

29. Battery Cover
30. Tripod Socket

Installing Battery and SD Memory Card

1. Open the battery cover door.

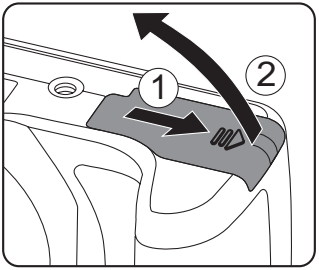

2. Insert the battery into the battery compartment according to the negative and positive directions as illustrated in the picture. Push the battery down until it locks in place.

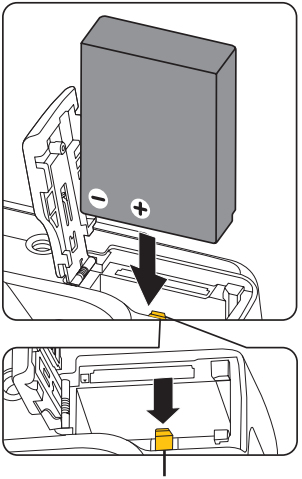

Battery Lock Knob

3. Insert the memory card into the memory card slot as shown in the diagram:

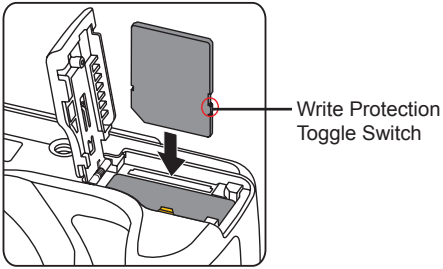

4. Close the battery cover door.

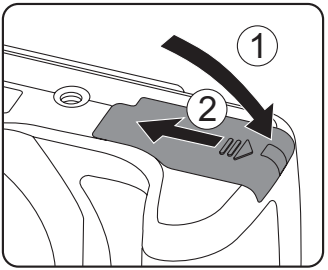

This camera takes a standard (SD/SDHC) memory card. We recommend using a name brand memory card that is Class 4 or higher and has a capacity of 4GB to 32GB. The camera is not compatible with Micro SD, Ultra, Ultra Plus, Extreme, XC, or adapters for any of these other memory cards.

To remove your memory card, open the battery cover door, gently press the memory card to eject it and remove it carefully.

Charging the Battery

Before you charge the battery, you should turn the camera off and insert the battery.

1. Connect the camera to the power charger using the supplied Micro USB cable.
2. Insert the plug of the power charger into the power outlet to charge the battery.

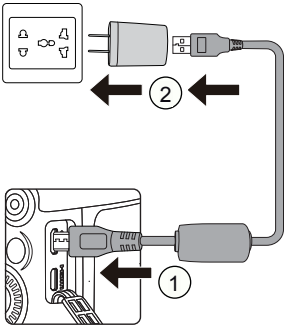

After the battery is stored for long periods of time, use the supplied power charger to charge the battery prior to use.

Charging indicator:
Steady orange: Charging
Steady green: Charging complete
To maximize battery life, charge the battery for at least 4 hours the first time.

Please charge the battery indoors between 0°C and 40°C (32°F and 104°F).

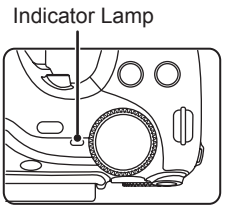

Vari-Angle LCD

The LCD is housed in the camera's body. You may follow the directions shown below to move it as needed:

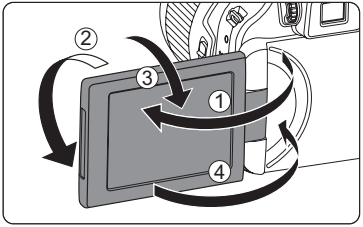

1. Open the LCD panel along the direction shown by arrow ①.
2. Rotate up to 180° along the direction shown by arrow ②.
3. Rotate up to 90° along the direction shown by arrow ③.
4. Close the LCD along the direction shown by arrow ④.

Please don't rotate the LCD with excessive force to prevent damages.

Please close the LCD along the direction shown by arrow ④ after use to protect it from scratches.

Turning Camera On and Off

Press the Power button to turn the camera on. To turn the camera off, press the Power button again.

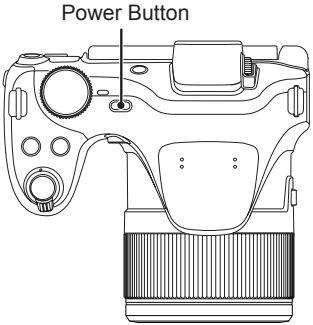

When the power is off, press and hold the playback button to power on and enter Playback mode.

Set your Language, Date/Time

Set your Language, Date/Time after the First Power-On

1. When you turn the camera on for the first time, the language selection screen appears.
2. Press the [▲ AF]/[▼ 🗑 ⏲] button to select your desired language.
3. After you press the (SET) button to confirm your language selection, the Date/Time settings screen will appear.
4. Press the [◀ 🌷]/[▶ ⚡] button to select the Date/Time to be adjusted: Time is displayed in YYYY.MM.DD/HH:MM.
5. Press the [▲ AF]/[▼ 🗑 ⏲] button to adjust the value for the desired Date/Time.
6. Press the (SET) button to confirm the time settings and the shooting screen will appear.

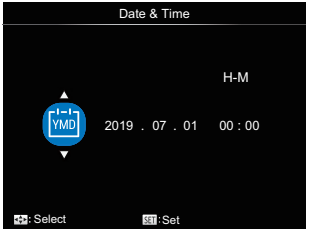

Resetting your Language

After you set your language for the first time, follow the instructions below to reset your language.

1. Press the button, press the [▲ AF] /[▼] button to select and press the SET button to enter the menu.
2. Press the [◀]/[▶] button to select .
3. Press the [▲ AF]/[▼] button to select [Language] and press the SET button to enter the menu.
4. Press the [▲ AF]/[▼] button to select your desired language and press the SET button to confirm.
5. Press the button and the shooting screen will appear.

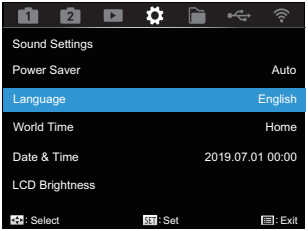

Resetting Date/Time

After you set your Date/Time for the first time, follow the instructions below to reset date and time.

1. Press the button, press the [▲ AF] /[▼] button to select , and press the SET button to enter the menu.
2. Press the [◀]/[▶] button to select .
3. Press the [▲ AF]/[▼] button to select [Date & Time] and press the SET button to enter the menu.
4. Press the [◀]/[▶] button to select the Date/Time to be adjusted: Time is displayed in YYYY.MM.DD/HH:MM.
5. Press the [▲ AF]/[▼] button to press the value for your selected entry. After you finish your settings, press the SET button to confirm.
6. Press the button and the shooting screen will appear.

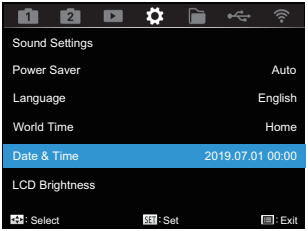

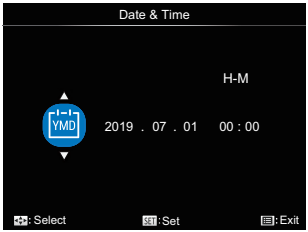

LCD Display

Overview of the Screen Icons in Shooting Mode

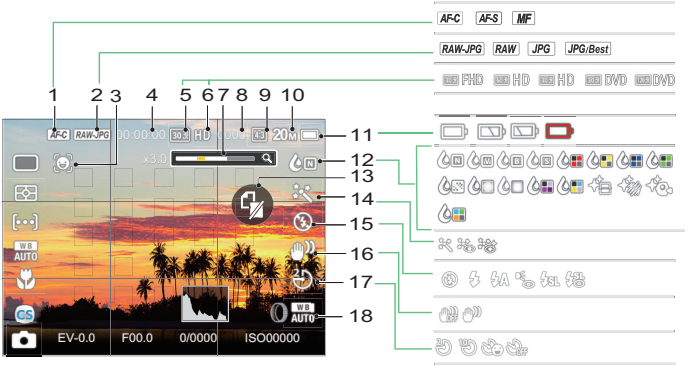

1	Focus Mode	7	Zoom Display(By turning the Zoom Lever)	13	No Memory Card
2	Quality	8	Number of Pictures in Static Mode	14	Beautifier
3	Face Detection	9	Ratio of Shooting Pixels	15	Flash Mode
4	Maximum Record Time	10	Image Size	16	OIS
5	Recording Speed (fps)	11	Battery Status	17	Self-Timer
6	Video Pixels	12	Color Effect	18	Lens Function Ring Custom Settings

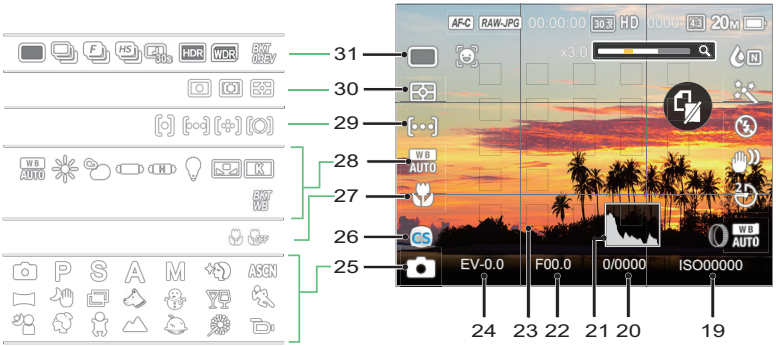

19	ISO Value	24	Exposure Compensation Value	29	AF Area
20	Shutter Speed	25	Shooting Mode	30	Expo Metering
21	Histogram	26	Custom Settings	31	Single / Continuous Shot / HDR / WDR / AE Bracketing
22	Aperture Value	27	Macro Mode		
23	Focus Frame	28	White Balance		

Overview of the Screen Icons in Movie Mode

1	Battery Status
2	Number of Videos Captured
3	Continuous Recording Time
4	Movie Mode

Overview of the Screen Icons in Playback Mode

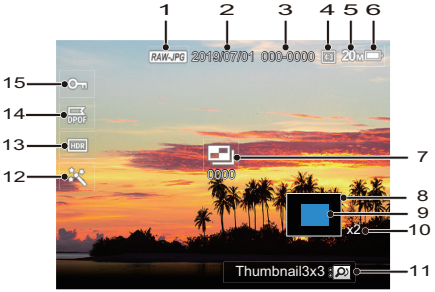

1	Quality	9	Zoom Magnification Area
2	Capture Date	10	Image Zoom Ratio
3	File Name	11	Index Prompt
4	Shooting Pixel Ratio	12	Touch-Up
5	Image Size	13	HDR
6	Battery Status	14	DPOF File Icon
7	Continuous Shot Group Playback	15	File Protection Icon
8	Image Area		

How to Take Pictures

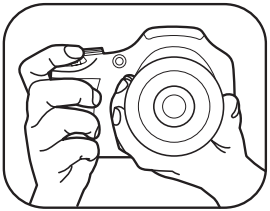

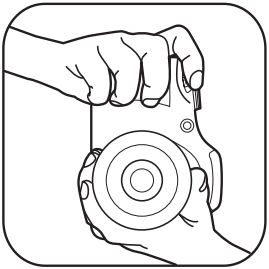

1. Hold the camera with both hands, being careful to not block the flash and lens with fingers.
2. Point the lens toward the object you want to take a picture of, and then frame it with the LCD.
3. Use the Zoom button to select Tele or Wide positions to zoom in or out on your subject.
4. Press the shutter button halfway to focus on the subject. When the focus frame turns green, press the shutter button down completely to take the picture.

Using the Mode Dial

This camera provides a convenient Mode dial that allows you to manually switch between different modes with ease. The available modes are listed below:

Mode Name	Icon	Description
Auto Mode		In this mode, the optimal conditions for taking pictures will be set based on the subject and environment. It is the most commonly used mode for taking pictures.
Program AE	P	Under different scenes, the user can switch the ISO and EV value according to personal preference, the camera can automatically set the shutter speed and aperture value.
Shutter Priority	S	Setting allows you to adjust the shutter speed / EV value and ISO value. The camera automatically sets the aperture value based on the shutter speed and ISO value to get the most appropriate exposure value.
Aperture Priority	A	In this mode, you can adjust the aperture size, EV and ISO values. The large aperture is to highlight the object focused through blurring the background, while the small aperture is for clear focus on both the background and the object.

Manual Mode	M	This mode is for manually setting the aperture, shutter speed and ISO value.
Face Beautifier		This mode automatically enhances facial features with skin softening touches and eye brightening capabilities.
Wireless Mode		Enable image transmission and remote control by connecting smart device with wireless network.
Scene Mode	SCN	Choose from 14 different pre-set scene types and effects for your photos.
Movie Mode		Record videos.
Custom Settings	CS	The user can store frequently used shooting modes and parameters. Switching to this mode enables quick adjustment.

Please refer to the table below if any nonadjustable options in **P S A M** mode:
(O: Available X: Not available)

Mode \ Options	Aperture	Shutter	EV	ISO
P	X	X	O	O
S	X	O	O	O
A	O	X	O	O
M	O	O	X	O

1. Turn the mode dial to select the **P S A M** mode you want.
2. Press the button to configure settings.
3. Press the [◀]/[▶] button to select an adjustment setting.
4. Press the [▲ **AF**]/[▼] button to adjust the parameters.
5. Press the SET button to confirm the settings and enter the shooting screen.

Please note that even if an option is not able to be adjusted in a particular mode, its value will still be displayed on the shooting screen.

Face Beautifier

1. Turn the Mode dial to select Face Beautifier Mode ( ).
2. Press the button and press the [▲ AF]/[▼] button to select .
3. Press the [◀]/[▶] button or turn the jog dial to select an option and press the SET button to confirm and enter the shooting screen.

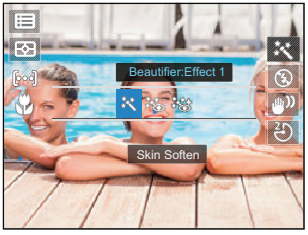

- Effect 1: Skin Soften
- Effect 2: Skin Soften + Eye Brightening
- Effect 3: Skin Soften + Eye Brightening + Eye Enlargement

Wireless Mode

Enable image transmission and remote control by connecting smart device with wireless network.

Before utilizing Wireless Mode, please review the following:

- Your smart device operating system version needs to be iOS 10 or higher, or ANDROID 5.0 or higher. If not, please upgrade your smart device before using the APP.
- Please do not use in places that have a high intensity magnetic field, electrostatic and electric wave interference (for example near a microwave oven), which may cause failure in receiving signals.
- To maintain a connection, please keep the camera within 10 meters (32.8 feet) without signal shielding interference.
- Please do not use wireless network connection functionality on a plane.
- The camera and the smart device can only be connected one to one.

Downloading the APP package:

Download a dedicated installation package from the application store (APP name: Minolta ProShot) and then install it.

- ANDROID devices : Search and download the APP “Minolta ProShot” in Google play, and install it following the instructions on the interface.
- iOS devices : Search and download the APP “Minolta ProShot” in APP store, and install it following the instructions on the interface.

1. Rotate the mode dial to and then enter the wireless network selection interface.
2. Press the [◀]/[▶] button to select and set options.

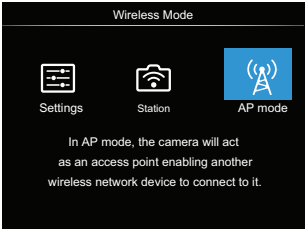

- [Settings]:
  Customize the wireless network settings for the camera system.
- [Station]:
  Use the Station Mode to connect to a “Personal Hotspot” created by your mobile device.
- [AP Mode]:
  In AP mode, the camera will act as an access point enabling another wireless network device to connect to it.

Rotate the mode dial to disconnect.

AP Mode

This camera may connect with your smart device through wireless network.

Settings of Camera:

1. Select the and press the SET button to enter the setting interface.
2. Press the [▲ AF]/[▼] button to select options to be adjusted, and press the SET button to enter the option setting interface.

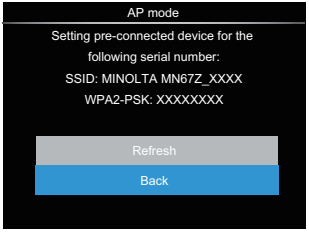

- Refresh:Create a new WPA2 PSK password.
- Back: Back to previous page.

Settings of Smart Device:

1. Enable the wireless network of smart device and then search surrounding wireless network devices.
2. Select the name of camera SSID to be connected and then input the eight-digit number password after WPA2-PSK on the camera.
3. Click the icon of the APP to enable the APP.

Set up completion:

Once the APP is connected to the camera, functional operations can be enabled on the smart device.

Station

Enable image transmission and remote control by connecting the camera with a wireless network access point created by your smart device.

1. Enable the wireless network access point of smart device.
2. Select the on camera and then press the SET button to confirm connection with smart device.
3. Press the [▲ AF]/[▼] button to select the name of smart device to be connected and then press the SET button to confirm. Then, the camera enters the password input interface.

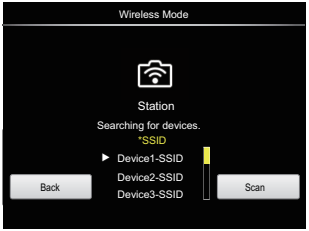

Press the [◀]/[▶] button to select:

- Scan: Search again surrounding wireless network devices.
- ▶ : Select the name of device to be connected.
- Back: Back to Wireless Mode select screen.

4. Press the [▲ **AF**]/[▼]/ [◀]/ [▶] button or turn the jog dial to select and then press the SET button to confirm your selection. You will enter the completion of WPA2- PSK after the password is saved.

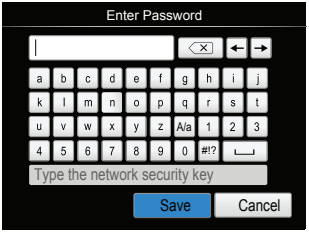

Meanings of Interface Icons:

Icon	Description
⌫	Delete the last letter
A/a	Switch the display of letters in capital and lowercase
← →	Move the Cursor
#!?	Switch the symbol input
␣	Input Space

5. Connect to network after saving the password.
   - If connected, the LCD will display as shown below:

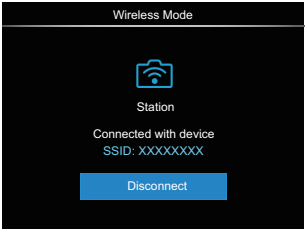

   - If connection failed, please check wireless network device and try again.

6. After connecting, click the icon of the APP on the smart device.

Display of Wireless network Connection Status:

The wireless network has successfully connected but APP is not enabled.

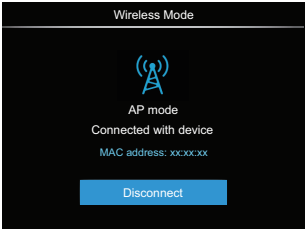
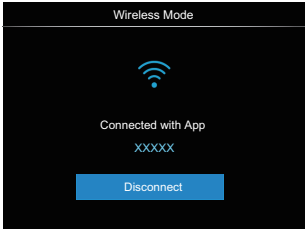
The wireless network has successfully connected and APP is enabled.