ELECTRIC CONNECTOR TECHNOLOGY

电连技术股份有限公司

ELECTRIC CONNECTOR TECHNOLOGY CO.,LYD.

APPROVAL SHEET

承 認 書

CUSTOMER NAME (客户名称)	亚洲光学股份有限公司
CUSTOMER P/N (客户料号)	CR5020605U9
PART NAME (品　　名)	ANT_IN_2.4G_DC338-WIFI
ECT P/N (料　　号)	81800V576
APPROVAL REV. 版次	A
DELIVERY DATE 送样日期	2023.09.18
PREPARED BY (承　办)	梁兑泉
CHECKED BY (审　核)	
APPROVED BY (核　准)	

Customer Approved(客户承认)

Approved By (核 准)	Checked By (审 核)	Prepared By (承 办)

地址:深圳市光明新区公明街道办西田锦绣工业园 8-A栋　　邮编：518106

Address: Building No.8-A,Jinxiu Industrical Park,Xitian,Gongming Town,
Guangming New District,Shenzhen,P.R.China　　Post No.:518106

TEL: 0755-81735688　FAX: 0755-81735699　E-MAIL: SALESSZ@ECTSZ.COM

产品承认书

Product Specification

P/N:	Title :
81800V576	ANT_IN_2.4G_DC338-WIFI

Rev.	ECN	Release and Revision Description	Prepared By/Date:	Approved By/Date:
X1	ECN235449	FIRST RELEASE	梁兑泉/2023-07-17	牛宝星/2023-07-17

Content

目录

1. Antenna Specification/天线标准 4
2. Antenna Picture/天线图片 5
3. DWG/工程图纸 6
4. DWG/包规图纸 7
5. Antenna test result/测试结果 8
   5.1 Return loss/Smith chart/VSWR/回波损耗/史密斯图/驻波比 8
   5.2 The gain and total efficiency test/增益和效率测试 9
      5.2.1 The definition of coordinate system/坐标系定义-Satimo SG24 9
      5.2.2 The test result of total efficiency and total gain/天线效率及增益测试结果 ...10
      5.2.3 The antenna radiation pattern(2D)/天线辐射方向图（2D） 11
      5.2.4 The antenna radiation pattern(3D)/天线辐射方向图（3D） 11
6. Reliability Test / 可靠性测试 12
7. BOM List / BOM 清单 13
8. Dimension report / 尺寸报告 14
9. ROHS List / ROHS 清单 15

1. Antenna Specification/天线标准

Antenna Specification/天线技术参数		
Electrical Specification/电气特性		
Item/目录	**Specification/规格**	**Comment/备注**
Freq. Range/频段范围	2400MHz-2500MHz	
Impedance/阻抗	50 (Ω)	
VSWR/驻波比	≤6.0	
Directional/辐射方向	Omni directional/全向天线	
Polarization/极化形式	linear polarization/线极化	
Peak Gain/峰值增益	-1.39(dBi)	
Test condition/测试条件	passive test/无源测试	
Total Efficiency/无源效率	≥15%	
Mechanical Specification/机械指标		
Antenna type/天线类型	FPC+Cable	
Connector Type/连接器类型	USS RF Ⅱ(818000097)	
RF Cable Type/射频线型号	OD0.81mm (Black)	
Connector Torque Test/连接器扭力	N/A	
Connector Pull Test/连接器拉力	N/A	
Salt Spray/盐雾测试	48 (H)	
Environmental Specification /环境指标		
Operating temp/工作温度	-40℃ ~ +80℃	
Storage temp/存储温度	-40℃ ~ +80℃	

2. Antenna Picture/天线图片

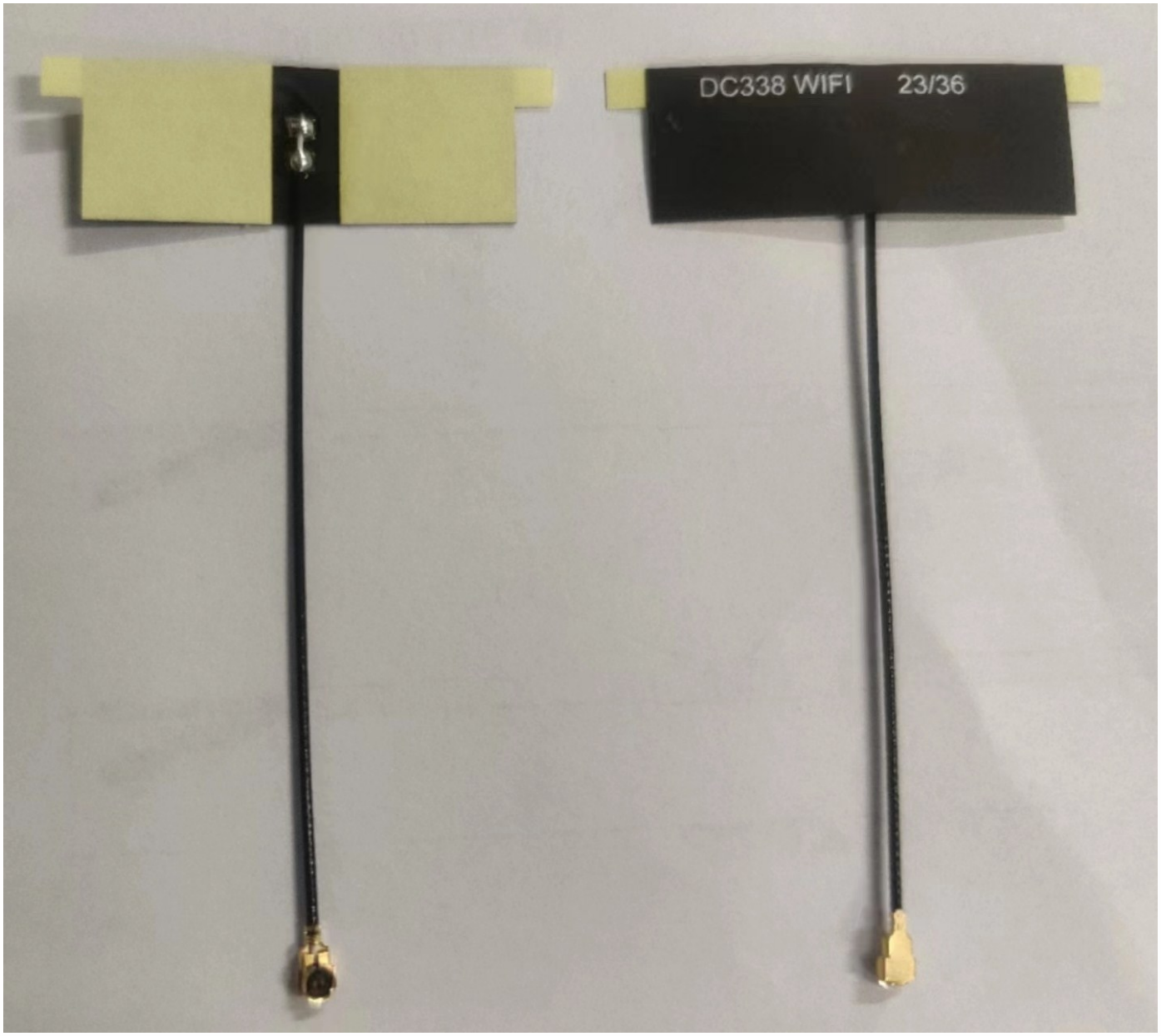

REV.	ECN NUMBER	DESCRIPTION	DATE	DRAWN	CHECKED	APPROVED
A	ECN235449	初版发行	10/24'23	梁兑泉	丁第斌	牛宝星

文档密级：
商业秘密

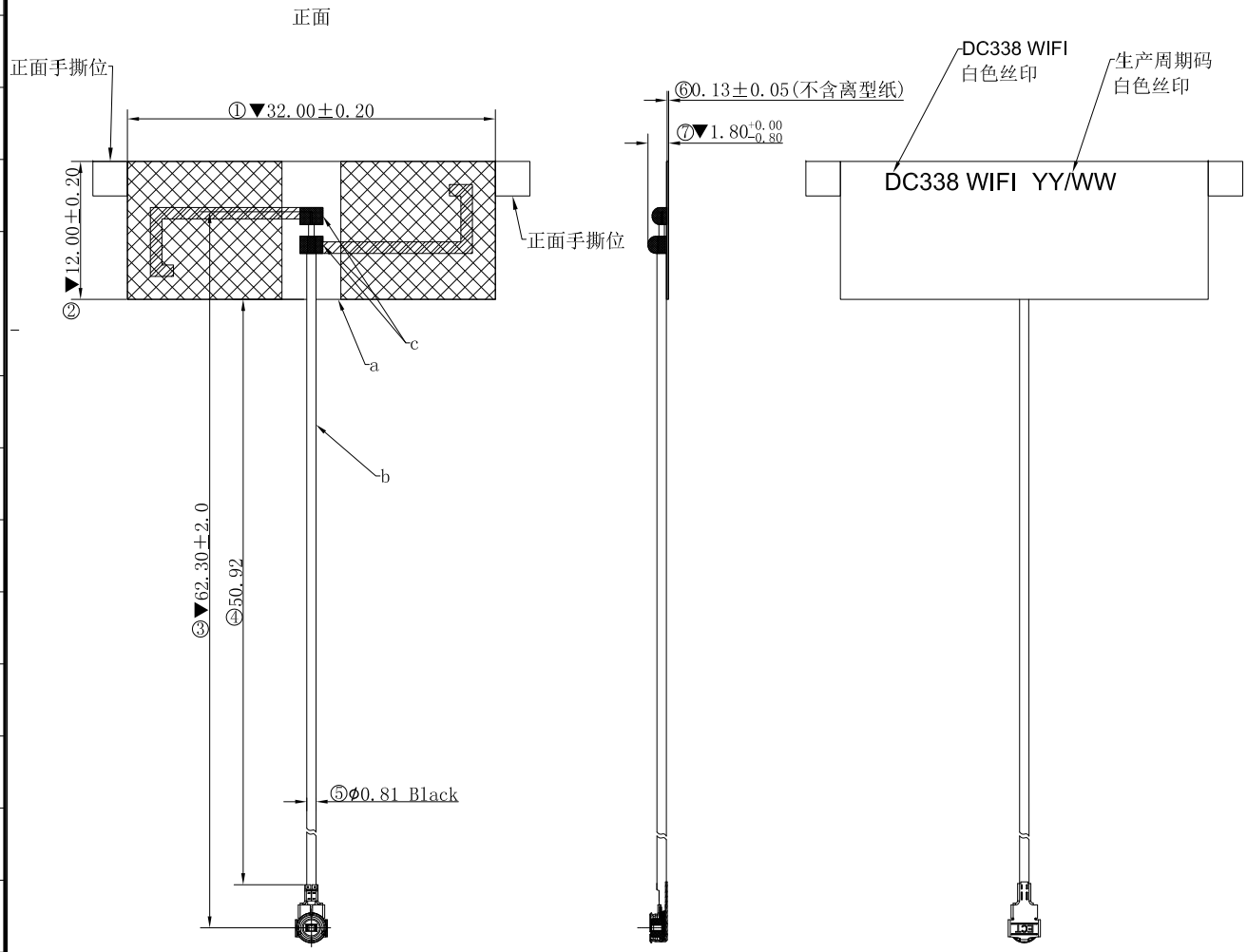

备注:
1. 焊接不能虚焊、假焊，焊点须饱满，屏蔽层不能有烫伤。
2. 允许最大毛边0.05MAX。
3. 测试要求：全检VSWR测试,矩阵测试。
   测试频率：2400-2480MHz,VSWR≤6.0。
4. 标有“▼”为QC重点检测尺寸。
5. 有害物质须符合ECT《QE-Q-19-001-环境有害物质管理基准》管控标准。

NOTE:
1. The welding can't virtual welding, welding, solder joints must be full,
   shielding layer cannot have burns.
2. Allow maximum flash 0.05 MAX.
3. The test requirements: pattern all inspection VSWR test, test matrix.
   Test frequency:2400-2480MHz,VSWR≤6.0。
4. Marked with "▼" key size detection for QC.
5. HSF shall conform to the standard QE-Q-19-001 Environmental Hazardous Substances Management.

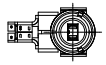
端子朝上

线路区域

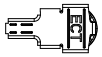
端子朝下

背胶区域

ITEM	PART NAME	Q'TY	MATERIAL / FINISH
c	Tin		环保锡丝，OD0.80mm
b	CABLE(φ0.81)	1	USS RF CABLE G1,SG,081BK,62.30,097
a	FPC	1	DC338 WIFI_1L_BK-FPC_HF_32.0*12.0

客户料号：CR5020605U9

ELECTRIC CONNECTOR TECHNOLOGY

GENERAL TOLERANCE	
.XXX± 0.05	
.XX± 0.10	
.X± 0.2	

SCALE: 1:1	DRAWN: 梁兑泉	DATE: 10/24'23	DWG.NO: 600-V576-01	TITLE: ANT_IN_2.4G_DC338-WIFI	REV. A
UNIT: mm	CHECK:	DATE:	PARTS NO.(INTENDED USE): 81800V576		SHEET: 1/1
SIZE: A4	APPROVE:	DATE:			

REV.	ECN NUMBER	DESCRIPTION	DATE	DRAWN	CHECKED	APPROVED
A	ECN235449	初版发行	10/24'23	梁兑泉	丁第斌	牛宝星

文档密级：
商业秘密

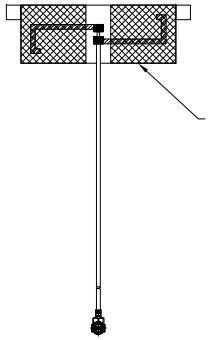

25PCS/扎

⇩

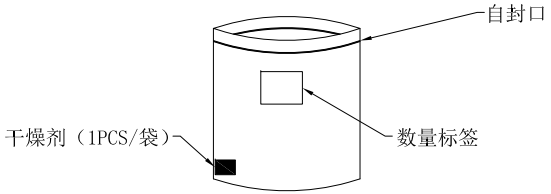

50PCS/袋
2扎/袋

⇩

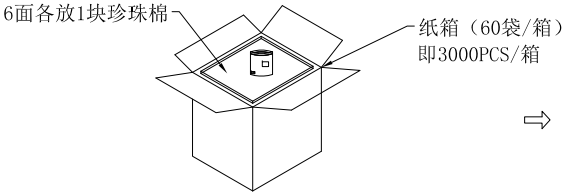

⇩

纸箱正面透视图

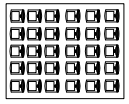

⇨

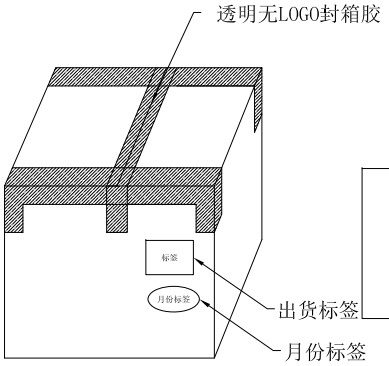

以商务提供的
标签模版为准

注释:
1. 包装时产品轻拿轻放,避免产品变形.
2. 检查是否有漏装,产品的放置方向是否正确.
3. 检查是否有产品被压死,
4. 若有未装满之零数箱,须以缓冲材塞满.
6. 大防水袋封口须缠绕.
7. 整箱封好后,检查标签是否贴好,干净,字迹清晰,标签内容是否正确,完善.
8. 外纸箱：内尺寸 L340*W240*H180mm.

Note:
1. When packing product light to take light put, avoid the product deformation.
2. Check for leaks installs, product placement direction is correct.
3. Check whether the product have been killed,
4. If there is not a null box full of cushion material should be related to fill.
6. Large waterproof bag sealing must be intertwined.
7. After sealed the whole case, check the label is good, clean, clear, the label content is correct, perfect.
8. Outer carton: inner size L340*W240*H180mm.

包装材料			产品包装容量			产品包装重量		
项目	料号	数量	Pcs/袋	袋/外箱	PCS/外箱	单重(g)	净重(kg)	总重(kg)
外纸箱	604010020	1	50	60	3000			
PE袋	840000511	60						
干燥剂	708040129	60						
PE袋	840000501	1						
上带								
三角纸板								
作业标签								
珍珠绵								
透明胶带								

ELECTRIC CONNECTOR TECHNOLOGY

GENERAL TOLERANCE	
XX.± 0.25	XX.° ± 2°
X.± 0.20	X.° ± 1°
.X± 0.13	.X° ± 0.5°
.XX± 0.05	

SCALE: 1:1	DRAWN: 梁兑泉	DATE: 10/24'23	DWG.NO: 600-V576-01
UNIT: mm	CHECK:	DATE:	PARTS NO.(INTENDED USE): 81800V576
SIZE: A4	APPROVE:	DATE:	

TITLE: ANT_IN_2.4G_DC338-WIFI 包规图

REV. X1

SHEET: 1/1

5. Antenna test result/测试结果

5.1 Return loss/Smith chart/VSWR/回波损耗/史密斯图/驻波比

5.2 The gain and total efficiency test/增益和效率测试

5.2.1 The definition of coordinate system/坐标系定义-Satimo SG24

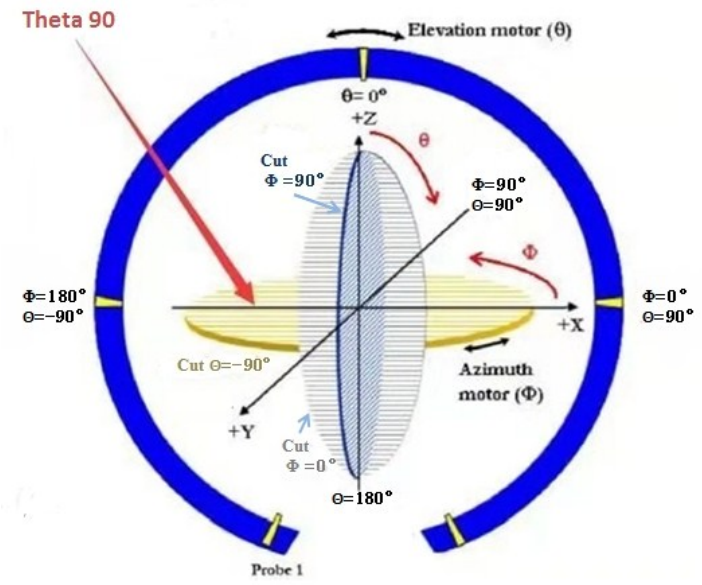

The coordinate system of Chamber/暗室坐标系

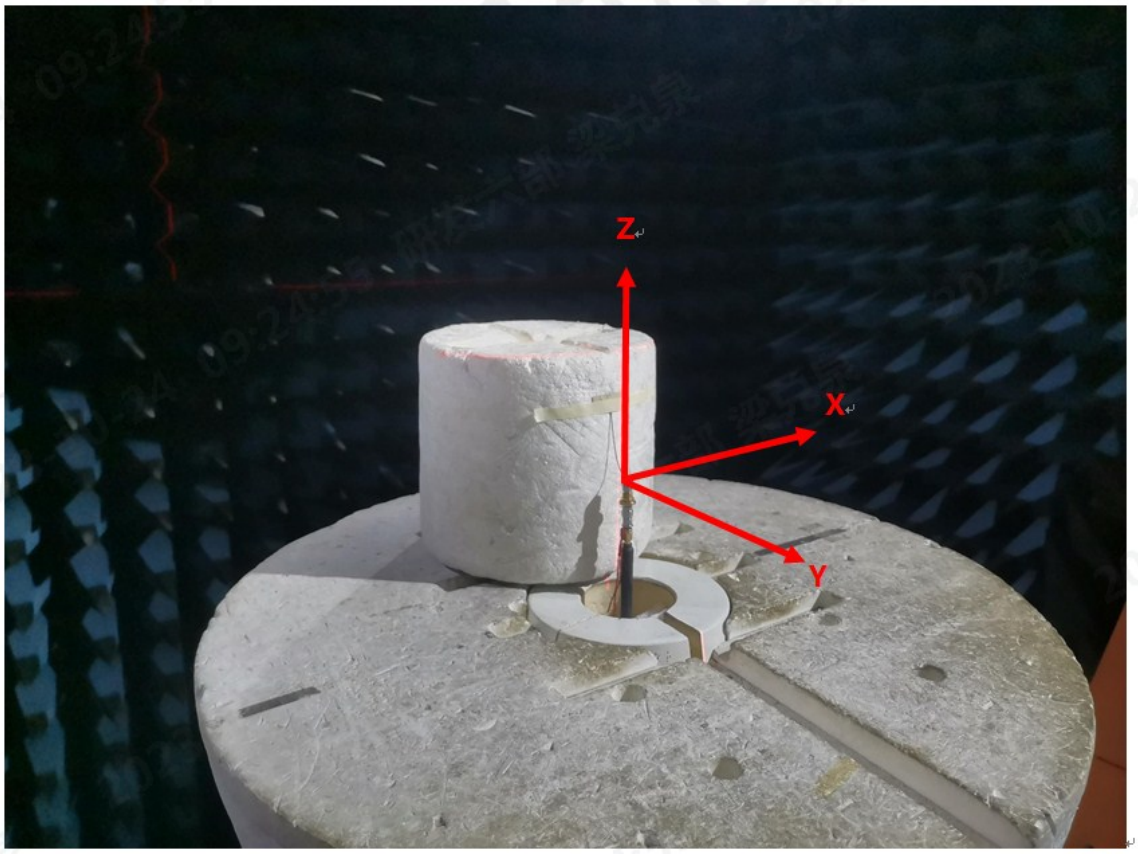

The production test position/天线测试放置位置

5.2.2 The test result of total efficiency and total gain/天线效率及增益测试结果

2400MHz-2500MHz

Frequency	Efficiency(%)	Gain (dBi)
2400MHz	15%	-2.86
2410MHz	15%	-2.97
2420MHz	16%	-2.51
2430MHz	18%	-1.97
2440MHz	19%	-1.66
2450MHz	18%	-1.72
2460MHz	17%	-2.22
2470MHz	18%	-2.22
2480MHz	20%	-1.90
2490MHz	21%	-1.39
AVG.	18%	-2.142

5.2.3 The antenna radiation pattern(2D)/天线辐射方向图（2D）

2400MHz-2500MHz

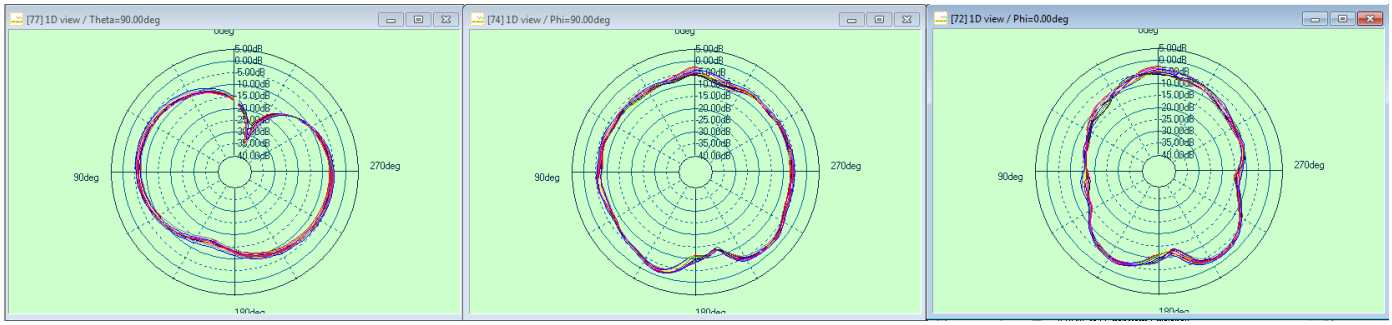

XOY **YOZ** **XOZ**

5.2.4 The antenna radiation pattern(3D)/天线辐射方向图（3D）

Frequency/频点 2400MHz-2500MHz

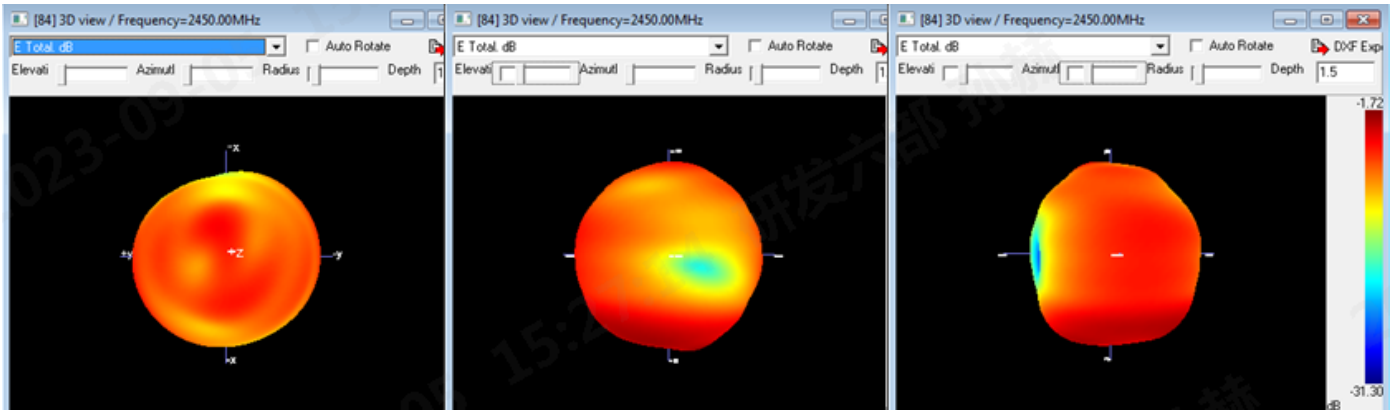

XOY **YOZ** **XOZ**

6. Reliability Test / 可靠性测试

Test Items		Test Condition and Procedure	Requirements
1	Vibration	Amplitude:0.76mm Freq:10 to 55Hz 2 hours for each direction	1.No Visual Damage 2.Frequency Tol.≤5%
2	Random Drop	Height:1.2m; 3 directions; 1 time for each direction	1.No parts separated 2.Frequency Tol.≤5%
3	Salt Spray	Temp:35°C; RH:≥ 85%; NaCl solution:≥ 5%; Time:24 hours	After 2 Hours Recovery 1.No Visual Damage 2.Frequency Tol.≤5%
4	Thermal Shock	Cycle:-40°C±2°C(1 hours) to +80°C±2°C (1hours) Cycles:48 times	After 2 Hours Recovery 1.No Visual Damage 2.Frequency Tol.≤5%
5	Low Temp	Temp:-40°C±3°C; Time:48 hours	After 2 Hours Recovery 1.No Visual Damage 2.Frequency Tol.≤5%
6	High Temp	Temp: 80°C±3°C; Time:48 hours	After 2 Hours Recovery 1.No Visual Damage 2.Frequency Tol.≤5%
7	Temperature and Humidity Chamber	Temp: 80°C±3°C; RH: ≥85%; Time: 48 hours	After 2 Hours Recovery 1.No Visual Damage 2.Frequency Tol.≤5%
8	RoHS	With Reference to IEC62321 with flow chart Directive RoHS2015/863	Directive RoHS 2015/863/EU

ELECTRIC CONNECTOR TECHNOLOGY

BOM List

编 号：	81800V576	创建时间：	2023/7/17
名 称：	天线	发布时间：	
规 格：	ANT_IN_2.4G_DC338-WIFI	制表者：	梁兑泉

序号	编号	名称	规格	单位	组成用量	备注
0010	605042736	电器类	DC338-WIFI_1L_BK-FPC_HF_32.0*12.0	PCS	1	
0020	74V576001	USS RF CABLE	USS RF CABLE试,G2,SG,081BK,62.3,097	PCS	60/3000	
0030	840000505	PE袋	防水袋,开口100*150*T0.06mm,PE料,透明,自封	PCS	60/3000	
0040	708040129	干燥剂	干燥剂,1500小袋/包，3克/小袋	PCS	60/3000	
0050	840000501	PE袋	防水袋,开口600*650*T0.06mm,PE料,透明	PCS	1/3000	
0050	604010020	纸箱	内尺寸L340*W240*H180mm,七层纸,K三K,加强芯	PCS	1/3000	

Electric Connector Technology (CP/CPK)

Part Description (物料描述)	ANT_IN_2.4G_DC338-WIFI	**Unit of Measurement (尺寸单位)**	MM
Part Number(物料编号)	81800V576	**Supplier (供应商)**	
Revision (版本)	A	**Customer (客户)**	亚洲光学股份有限公司
Tool No. (模具编号)	/	**Measured By / Date (测量员/日期)**	王瑞霞/2023/09/18
Cavity No. (穴位编号)	/	**Reviewed By / Date (审核人/日期)**	
Ton of equipment (设备吨位)	/	**Supplier P/N (供应商产品编号)**	

Equipment Used (测量设备)	**CMM**	**CMM**	**CMM**	**CMM**	**CMM**	**CMM**	**CMM**	**CMM**	**CMM**	**CMM**	**CMM**	**CMM**	**CMM**	**CMM**
Equipment Calibration Due Date (测量设备校验到期日)	**20240107**	**20240107**	**20240107**	**20240107**										
Dimension Serial# (尺寸编号)	**1**	**2**	**3**	**7**										
Dimension (尺寸要求)	**32.00**	**12.00**	**62.30**	**1.80**										
+ Tol (公差)	**0.20**	**0.20**	**2.00**	**0.00**										
- Tol (公差)	**0.20**	**0.20**	**2.00**	**1.00**										
1	32.07	11.92	62.30	1.05										
2	31.98	11.95	62.20	1.00										
3	32.02	11.98	62.20	1.06										
4	32.08	11.95	62.00	1.05										
5	32.04	11.96	62.30	1.05										
6	32.03	11.95	62.50	1.00										
7	31.98	11.98	62.00	1.05										
8	32.05	11.97	62.20	1.00										
9	31.97	12.02	62.10	1.03										
10	32.09	11.97	62.00	1.05										
11	31.99	11.97	62.30	1.05										
12	31.98	11.96	62.10	1.02										
13	32.09	11.97	62.30	1.05										
14	31.98	12.02	62.20	1.04										
15	32.05	11.95	62.10	1.05										
16	32.04	11.98	62.10	1.02										
17	32.08	11.95	62.30	1.00										
18	31.98	11.98	62.00	1.03										
19	32.06	12.06	62.30	1.05										
20	32.03	12.03	62.00	1.02										
21	32.04	11.96	62.20	1.03										
22	31.99	11.94	62.40	1.00										
23	32.02	12.02	62.10	1.03										
24	32.09	12.02	62.00	1.03										
25	32.03	11.92	62.40	1.02										
26	31.98	11.96	62.20	1.03										
27	32.02	12.06	62.00	1.03										
28	31.98	11.98	62.40	1.05										
29	32.02	11.97	62.00	1.02										
30	31.96	11.97	62.20	1.03										
31	31.92	11.98	62.10	1.03										
32	32.03	11.97	62.00	1.02										
MAX.	32.09	12.06	62.50	1.06										
MIN.	31.92	11.92	62.00	1.00										
AVERAGE	32.02	11.98	62.17	1.03										
STDEV	0.04	0.03	0.15	0.02										
CP	1.55	1.92	4.55	9.25										
CPK	1.39	1.70	4.26	4.27										
Measuring	Vemier caliper													

ELECTRIC CONNECTOR TECHNOLOGY

ROHS List

料号P/N	描述description	材料料号P/N	材料名称 material	物料各构成名称 Material by name	检测报告编号 Test report No	有效日期 effective date	REACH声明	重要组件 Important	其它else
81800V576	ANT_IN_2.4G_DC338 -WIFI	605042736	FPC	FPC-基材+铜箔	A2230108006101004E	2024.03.21	/	/	/
				FPC-镀金	A2220497610101001ER1	2023.11.10	/	/	/
				FPC-3M9471	SHAEC2217569205	2024.01.24	/	/	/
				FPC-丝印油墨（白）	ETR23A00862M01	2024.10.13	/	/	/
				FPC-阻焊油墨（黑）	ETR23701480	2024.07.13	/	/	/
		820097016	线材	镀银铜线	SHAEC2217007511	2023.12.15	/	/	/
				镀锡铜线	A2230173541101001E	2024.04.24	/	/	/
				FEP绝缘	SHAEC22004639301	2023.12.15	/	/	/
				FEP护套	SHAEC23000346911	2024.01.13	/	/	/
				色母(黑)	SHAEC23002162901	2024.03.09	/	/	/
		830097101	端子	PP	A22230525843101001E	2024.10.17	/	/	/
		710097202 820097301		C5191	CANEC23010562802	2024.09.28	/	/	/
				C5210	SZXEC23002333606	2024.09.28	/	/	/
				Au	CANEC2302637848	2024.03.07	/	/	/
				Ni	CANEC2302637827	2024.03.07	/	/	/