Kodak

PIXPRO SL10

SMART LENS Camera

User Manual

用戶手冊

使用说明书

取扱説明書

ENGLISH

繁體中文

简体中文

日本語

About this Manual

Thank you for purchasing the KODAK PIXPRO SMART LENS Camera. Please carefully read this manual and keep it for future reference.

- JK Imaging Ltd. reserves all rights of this document. No part of this published manual may be reproduced, transmitted, transcribed, stored in a retrieval system or translated into any language or computer language, in any form, by any means, without the prior written permission of JK Imaging Ltd..
- All trademarks mentioned in this manual are used for identification purposes only and are properties of their respective owners.
- This manual is to introduce you how to operate this KODAK PIXPRO SMART LENS Camera. JK Imaging Ltd. has tried its utmost to ensure the correctness of all contents here, but reserves the right to modify. All of these contents are subject to change without prior notice.

EN

Declaration of Conformity

Responsible Party: JK Imaging Ltd.
Address: 1411 W. 190th Street, Suite 550, Gardena, CA 90248, USA
Company Website: www.kodakpixpro.com

In this manual:

The memory card referred to in this manual is a Micro SD Card or Micro SDHC card.

INDUSTRY CANADA

This device complies with Canadian RSS-210.
This device complies with Industry Canada license-exempt RSS standard (s). Operation is subject to the following two conditions: (1) this device may not cause interference, and (2) this device must accept any interference, including interference that may cause undesired operation of the device.

EN

Radiation Exposure Statement:
This product complies with the Canadian portable RF exposure limit set forth for an uncontrolled environment and is safe for intended operation as described in this manual. Additional RF exposure reduction can be achieved if the product can be kept as far as possible from the user body or set the device to lower output power if such function is available.

Industry Canada statement:

Ce dispositif est conforme à la norme CNR-210 d'Industrie Canada applicable aux appareils radio exempts de licence. Son fonctionnement est sujet aux deux conditions suivantes: (1) le dispositif ne doit pas produire de brouillage préjudiciable, et (2) ce dispositif doit accepter tout brouillage reçu, y compris un brouillage susceptible de provoquer un fonctionnement indésirable.

Déclaration d’exposition aux radiations:
Le produit est conforme aux limites d’exposition pour les appareils portables RF pour les Etats-Unis et le Canada établies pour un environnement non contrôlé.

Le produit est sûr pour un fonctionnement tel que décrit dans ce manuel. La réduction aux expositions RF peut être augmentée si l’appareil peut être conservé aussi loin que possible du corps de l’utilisateur ou que le dispositif est réglé sur la puissance de sortie la plus faible si une telle fonction est disponible.

EN

For Customers in Europe

This symbol [crossed-out wheel bin WEEE Annex IV] indicates separate collection of electrical waste and electronic equipment in the European countries. Please do not throw the equipment into domestic refuse. Please use the return and collection systems available in your country for proper, safe disposal of this product.

“CE” mark indicates that this product complies with the European requirements for safety, health, environment and customer protection. “CE” marked cameras are intended for sales in Europe.

EN

Europe – EU Declaration of Conformity

This device complies with the essential requirements of the R&TTE Directive 1999/5/EC. The following test methods have been applied in order to prove presumption of conformity with the essential requirements of the R&TTE Directive 1999/5/EC:

- EN 60950-1: 2006+A11:2009 +A1:2010 +A12:2011
Safety of Information Technology Equipment

- EN 50566: 2013
Product standard to demonstrate compliance of radio frequency fields from handheld and body- mounted wireless communication devices used by the general public (30 MHz — 6 GHz)

- EN 62209-2: 2010
Human exposure to radio frequency fields from handheld and bodymounted wireless communication devices — Human models, instrumentation, and procedures
Part 2: Procedure to determine the specific absorption rate (SAR) for wireless communication devices used in close proximity to the human body (frequency range of 30 MHz to 6 GHz)

- EN 300 328 V1.8.1 : 2012
Electromagnetic compatibility and Radio spectrum Matters (ERM); Wideband Transmission systems; Data transmission equipment operating in the 2.4 GHz ISM band and using spread spectrum modulation techniques; Harmonized EN

covering essential requirements under article 3.2 of the R&TTE Directive.

- EN 301 489-1 V1.9.2: 2008
Electromagnetic compatibility and Radio Spectrum Matters (ERM); Electro Magnetic Compatibility (EMC) standard for radio equipment and services; Part 1: Common technical requirements.

- EN 301 489-17 V2.2.1: 2012
Electromagnetic compatibility and Radio spectrum Matters (ERM); Electro Magnetic Compatibility (EMC) standard for radio equipment and services; Part 17: Specific conditions for 2.4 GHz wideband transmission systems and 5 GHz high performance RLAN equipment.

EN

For Customers in the U.S.A.

Federal Communication Commission Interference Statement
This device complies with Part 15 of the FCC Rules. Operation is subject to the following two conditions: (1) This device may not cause harmful interference, and (2) this device must accept any interference received, including interference that may cause undesired operation.

This equipment has been tested and found to comply with the limits for a Class B digital device, pursuant to Part 15 of the FCC Rules. These limits are designed to provide reasonable protection against harmful interference in a residential installation. This equipment generates, uses and can radiate radio frequency energy and, if not installed and used in accordance with the instructions, may

cause harmful interference to radio communications. However, there is no guarantee that interference will not occur in a particular installation. If this equipment does cause harmful interference to radio or television reception, which can be determined by turning the equipment off and on, the user is encouraged to try to correct the interference by one of the following measures:

EN

- Reorient or relocate the receiving antenna.
- Increase the separation between the equipment and receiver.
- Connect the equipment into an outlet on a circuit different from that to which the receiver is connected.
- Consult the dealer or an experienced radio/TV technician for help.

FCC Caution: Any changes or modifications not expressly approved by the party responsible for compliance could void the user's authority to operate this equipment.

This transmitter must not be co-located or operating in conjunction with any other antenna or transmitter.

Radiation Exposure Statement:
This product complies with the FCC portable RF exposure limit set forth for an uncontrolled environment and is safe for intended operation as described in this manual. Additional RF exposure reduction can be achieved if the product can be kept as far as possible from the user body or set the device to lower output power if such function is available.

Safety Notes

Safety notes for this camera

- Do not disassemble or repair this camera by yourself.
- Do not drop the camera or allow it to hit solid objects.
- To prevent the camera from being damaged by moisture, do not use or store the camera in very humid environments, such as in rain or near bodies of water.
- Turn the camera off, remove the battery and the memory card, and dry it within 24 hours if water accidentally comes in contact with the camera.
- Do not use or store the camera in dusty places or on a beach to prevent dust or sand from entering the camera, causing possible damage to it.
- Do not use or store the camera in a hot environment or under direct sunlight.
- Please do not use in places having high intensity magnetic field, electrostatic and electric wave interference (for example near a microwave oven), which may cause failure in receiving signals.
- Before you remove the battery and memory card, the camera should be turned off.
- Advise to use soft lens cloth to regularly clean the camera's body and lens mount.

- In cleaning the camera body, please don’t use corrosive cleaning agents or those with alcohol or organic solvent.
- If this camera is not in use for a long time, please keep it in a dry and clean condition.
- Our company will not pay compensation for any failure of playback of pictures or videos caused by improper operation.
- When using your camera on an airplane, observe the relevant rules specified by the airline.
- Do not place the product where it can be reached by infants and children.

EN

Safety notes for battery

- Please use a battery that is the same type as the one included.
- Please use the attached charger to charge the battery.
- If the liquid leaking from the battery contacts with your skin, please immediately flush with water and seek medical treatment. If the liquid leaks into the camera, please contact the retailer.
- Please dispose of the wasted battery in accordance with local (national or regional) regulations.
- To prevent the battery from being damaged, do not drop the battery or allow it to hit solid objects or to be scratched by the objects.

- Do not let the battery come in contact with metal objects (including coins) to avoid short circuiting, discharging, excessive heat, or possible leakage.
- Do not attempt to disassemble the battery.
- Do not expose the battery to water. Always keep the battery contacts dry.
- Do not heat the battery or throw it into a fire to avoid a possible explosion.
- Do not store the battery in a hot environment or in direct sunlight.
- If an overheating happens during charging or use, please immediately stop charging or using and then take out the battery with care in shutdown mode to wait it for cooling.
- If it is not used for a long time, please remove the battery for proper keeping.
- In a colder environment, the performance of the battery could be noticeably reduced.

EN

Safety notes for memory card

- A memory card is optional and is not included in the product package. It needs to be purchased separately. Please use an original memory card which is above Class 6 and has a capacity of 4GB to 32GB.
- Before using a brand new memory card, please format the memory card first.
- Do not make the memory card fall off from high places or hit by heavy objects

to prevent damaging it.

- Do not attempt to disassemble or repair the memory card.
- Do not expose the memory card to water. Always keep it dry.
- Do not remove the memory card when the camera is turned on. Otherwise, the memory card could be damaged.
- Do not directly edit the data on the memory card. Copy the data to your PC before you edit them.
- When the camera is stored for a long period of time, be sure to download your photos and remove the memory card. Store it in a dry environment.
- Do not modify the name of the files or folders of the memory card using your PC. Modifying the file names may cause the files to not be recognized on the camera or a possible error may occur.
- A photo taken with the camera will be stored in the folder that is automatically generated on the memory card. Do not store photos that are not taken using this camera in these folders as the pictures cannot be recognized during the playback.

Product Specifications

Image Sensor	1/2.3” BSI CMOS
Total Pixels	16.76 Megapixels
Effective Pixels	16.35 Megapixels
Focal Length	5.0mm (Wide) ~ 50.0mm (Tele)
35mm film equivalent	28mm (Wide) ~ 280mm (Tele)
F number	F3.2 (Wide) ~ F5.6 (Tele)
Optical Zoom	10x
Focusing Range	Normal: (Wide) 60cm ~ ∞, (Tele) 100cm ~ ∞ Macro: (Wide) 5cm ~ ∞
Anti-Handshake	Optical Image Stabilization
Digital Zoom	4x Digital Zoom (Combined Zoom: 40x)

EN

Wi-Fi	Yes (802.11 b/g/n)
NFC	Yes
Remote Control	Yes (via smart device)
File Format	Still Image: Exif 2.3 (JPEG)
	Movie: MP4 [Image: H.264; Audio: AAC(Stereo)]
Power	Rechargeable Li-ion Battery LB-052, 3.7V 880mAh, In-Camera Charging
Shooting Capability	Approx. 240 Shots (Based on CIPA Standards)
Operation Environment	Temperature: 0 ~ 40°C, Humidity: 0 ~ 90%
Dimensions (W×H×D)	59.6×59.6×55.8mm (Based on CIPA Standards)
Mass	Approx. 145g (Body only)

Getting Ready

Accessories Included

Your camera box should contain the camera model you purchased along with the following accessories. If anything is missing or appears to be damaged, please contact your retailer.

- Rechargeable Li-ion battery
- AC adapter
- Micro USB cable
- Wrist strap
- User manual
- Service card
- Warranty card

Part Names

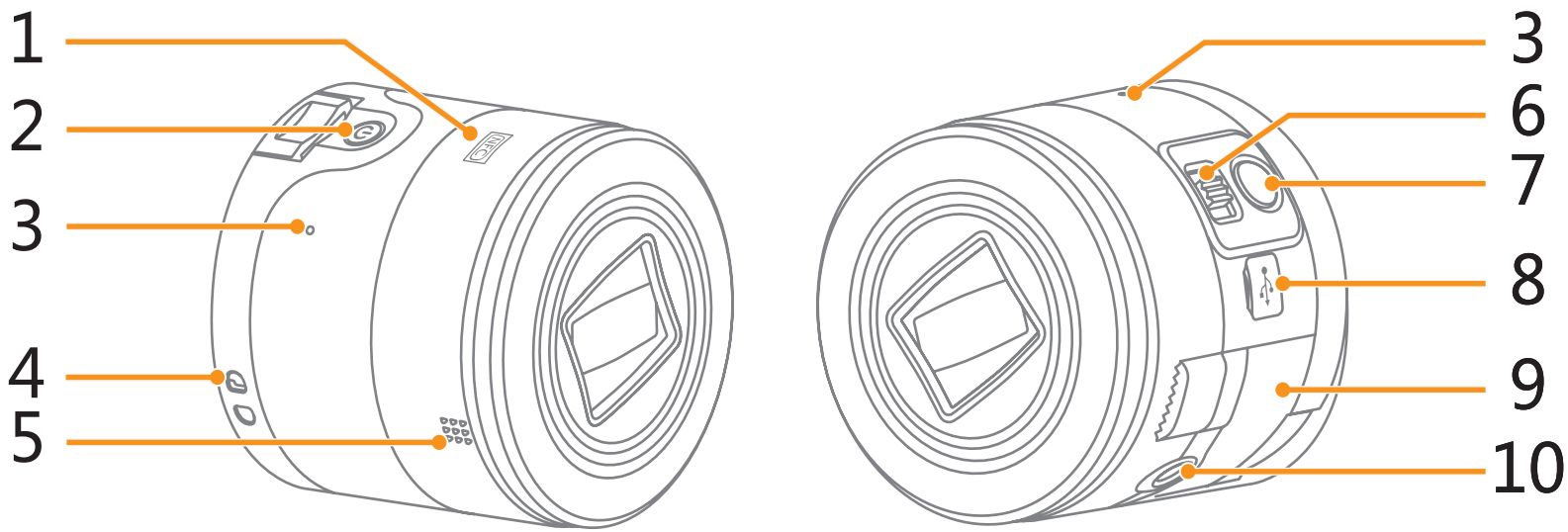

1	NFC Mark	6	Zoom Lever
2	Power Button	7	Shutter Button
3	Microphone	8	Micro USB Port Cover
4	Wrist Strap Buckles	9	Battery Cover
5	Speaker	10	Tripod Screw Hole

After turning the camera on, you may move the camera's zoom lever to zoom, and press the shutter button to take photos.

Installation of Wrist Strap

It is recommended to use the wrist strap to prevent the camera falling off during use. Please install it on the camera and then wear it around your hand per the diagram below.

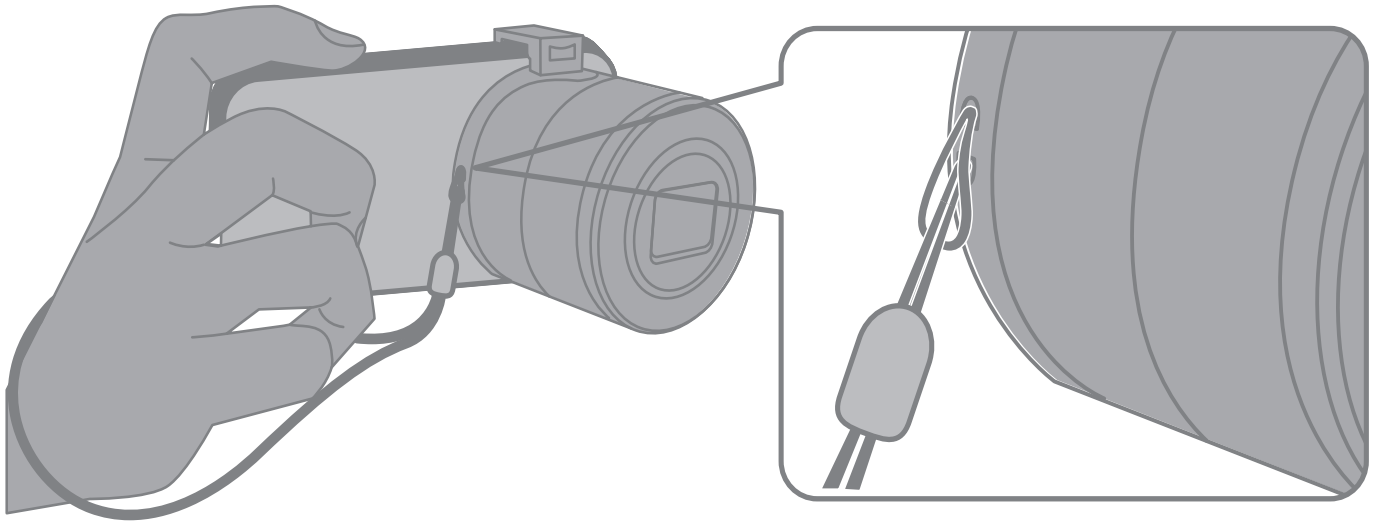

EN

Installing Battery and Memory Card

EN

1. Open the battery cover.

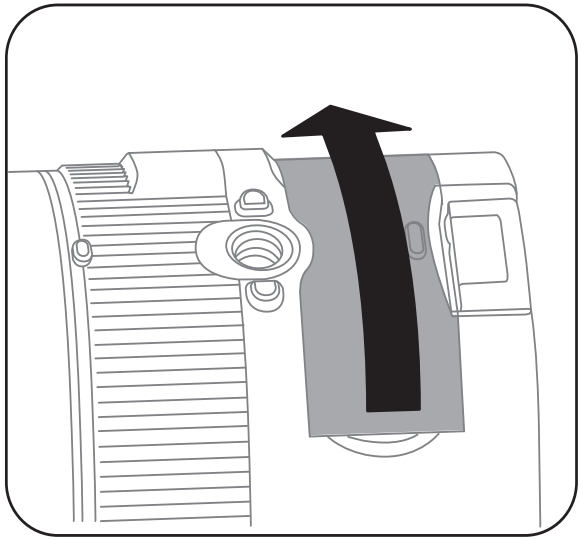

2. Insert the battery into the battery compartment according to the negative and positive directions as illustrated in the picture. Push the battery down until it locks in place.

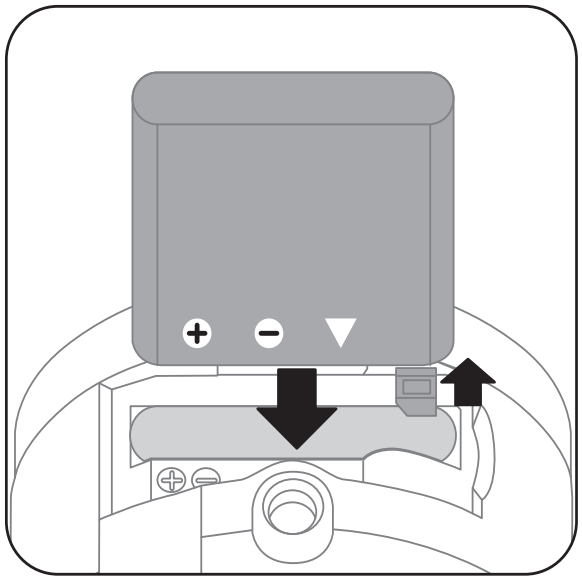

3. Insert the memory card into the memory card slot as shown in the diagram. Push it down until it locks in place.

4. Close the battery cover.

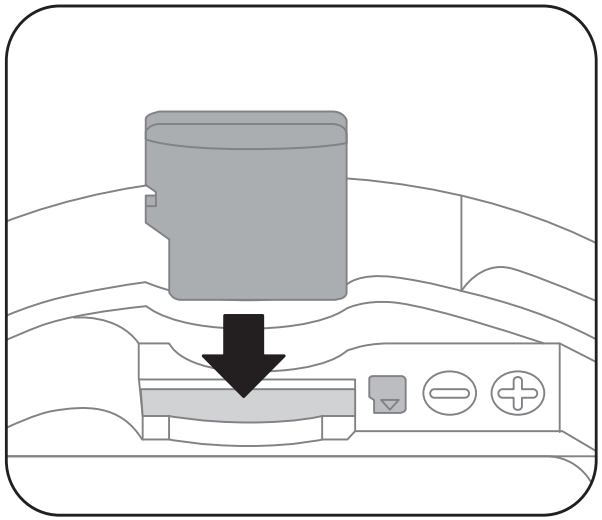

When you insert a memory card, make sure the notch of the card matches the markings on the top of the card slot.

To remove the memory card, press down on the card slightly to unlock it and then carefully draw it upwards with fingers.

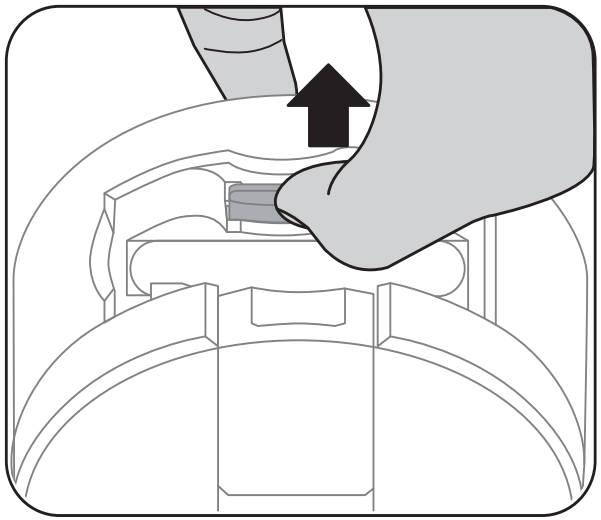

EN

Charging Battery

For charging, you may use the included AC Adapter and Micro USB cable to charge the camera when it is off. You also may connect the Micro USB cable to computer for charging.

EN

Charging indicator

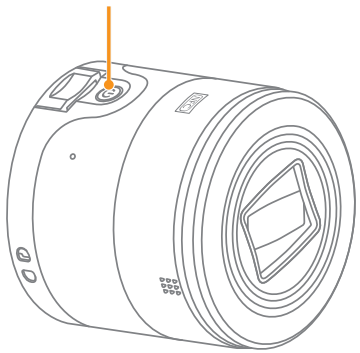

Charging indicator:
Steady orange: Charging
Steady green: Charging complete

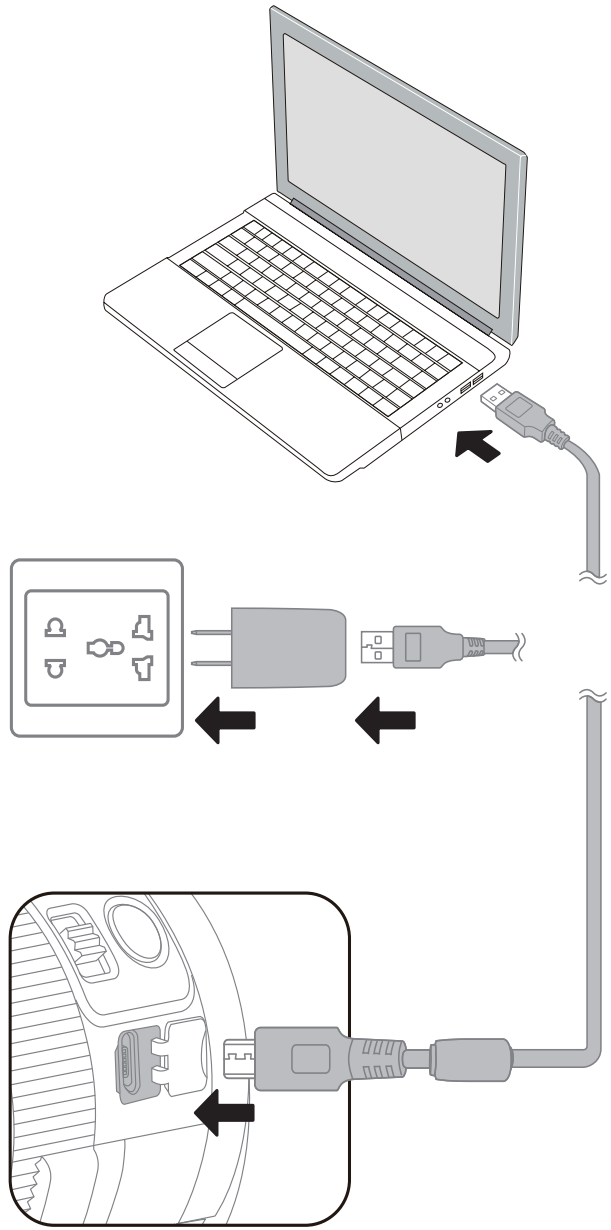

The camera will only charge while powered off. If the camera is turned on while connected to power, normal camera functions will be available for use, but the camera will not charge until it is turned off.

Connect the smart device

Install APP

Download a dedicated installation package from the application store corresponding to the device (APP name: PIXPRO Remote Viewer) and then install it.

Before use, please confirm that your smart device is a smart phone with Android 2.3 or 4.x system, a tablet computer with Android 4.x or is an iOS6/7 system. If not, please upgrade your smart device before using the APP.

Wi-Fi connection (Android system and iOS system)

1. Press the power button to turn the camera on.
2. Enable the Wi-Fi feature of your smart device to automatically search surrounding hotspots.
3. Select "PIXPRO-SL10_XXXX", and input the eight-digit number password. (The camera's SSID and password is located on the back side of the battery cover.)

EN

To maintain a connection, please keep the camera within 10 meters (32.8 feet) without signal shielding interference.

The camera and the smart device can only be connected one to one.

EN

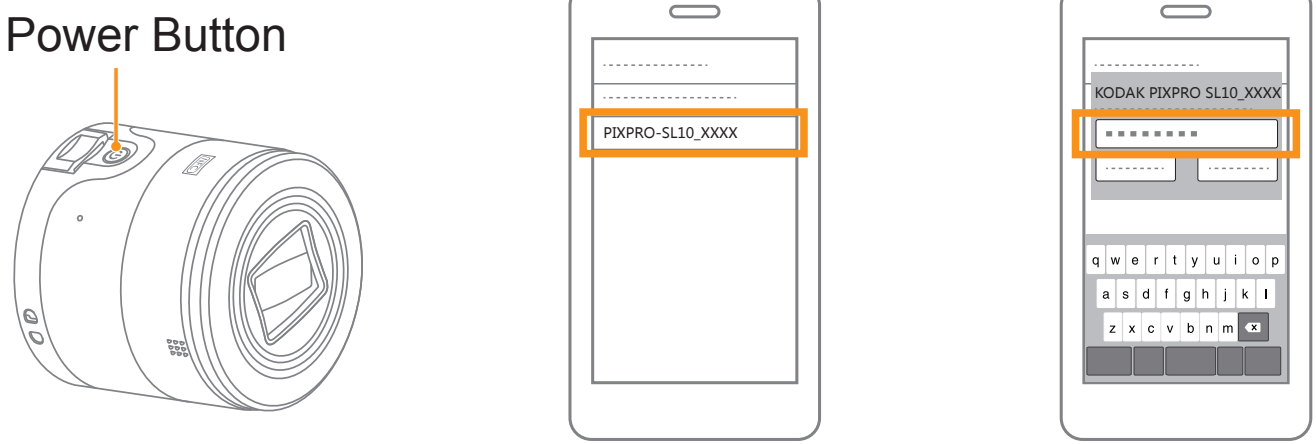

NFC Connection (Android system)

1. Enable the NFC of your smart device.
2. Use your smart device to slightly touch the NFC mark on the camera. If successful in pairing the devices, there will be a prompt tone and the NFC icon will appear in the taskbar of your smart device. The APP will then open automatically.

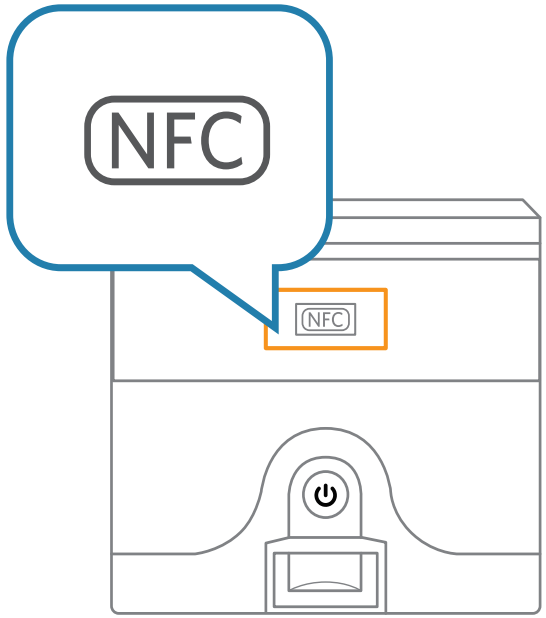

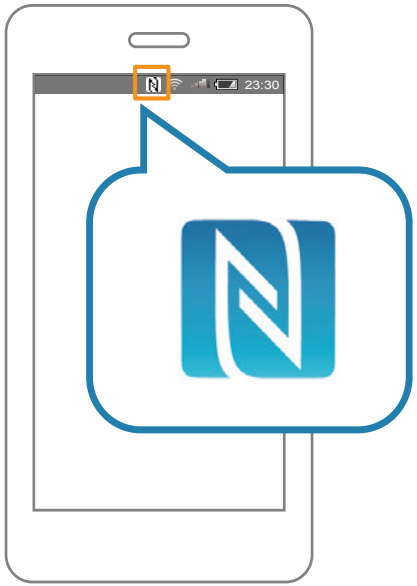

EN

The NFC feature will be available only when your smart device's screen lock is unlocked.

After successful connection of your smart device with camera, if you use another camera to touch the smart device, or if you use another smart device to touch the camera, the previous connection will be replaced.

EN

Installation on smart phone.

1. Open the clasp arm of the camera as shown in Figure 1.
2. Insert smart phone into the clasp as shown in Figure 2.

Please don't swing the phone/lens after installation to prevent them from damage.

Please take care not to pinch your fingers during installation.

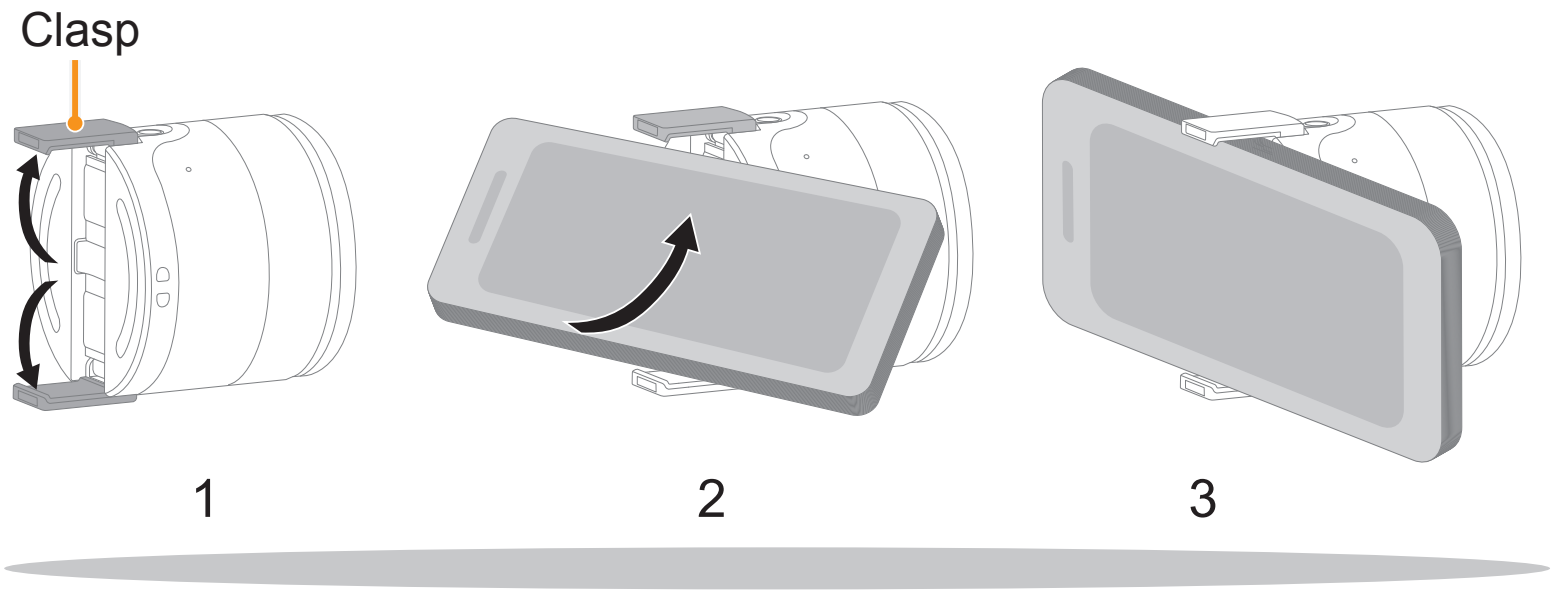

EN

Recording Image

After successfully connecting your smart device with the camera, click the APP icon on the screen of your smart device to operate.
The APP supports the position service function on your device. It may record GPS information in the photo files. This function is not supported for movie files.

EN

Remote Viewfinder

The APP will open to the viewfinder interface. Camera functions can be accessed from this screen.

Introduction to the Icons

Enter the previous stage of interface or return to the APP home

Image size

- (4:3) 16MP: 4608×3456/ 10MP: 3648×2736
  (16:9) 12MP: 4608×2592/ 2MP: 1920×1080

Self-timer

- off/ 2s/ 10s

White Balance

- AWB/ Daylight/ Cloudy/ Fluorescent/ Incandescent/ Fluorescent H

ASCN	**Program AE/ Face Beautifier/ Auto Scene/ Continuous Shot/ HDR/ WDR/ Movie**
W T	**Zoom control** ■ T: zoom in / W: zoom out
123456	**Available shots**
	Battery life
	Touch focus display
	No SD Card in Camera side
EV-3.0	**Exposure compensation** (scope: +3.0 ~ -3.0)
ISO100	**ISO value options** ■ Auto/100/200/400/800/1600/3200
F5.6	**Aperture value** (scope: F3.2 ~ F5.6)
1/1234	**Shutter speed** (scope: 1/4000 ~ 4s)
	Zoom display Bar

EN

EN

Enter the index playback state on the camera

Enter into menu

Shoot photos

Start video recording

Stop video recording

Movie

Switch shooting mode to record mode.

DVD

Video size

- (16:9) FHD 1080p30 (1920×1080@30fps)
  HD 720p30 (1280×720@30fps)
  (4:3) DVD 848×480 (120fps)

00:00

Record time

Self-timer

- Off/ 10 10s

Photo

Switch record mode to shooting mode

Using the APP to take a photo:

1. Select icons at the top of the interface to set the corresponding parameters.
   Activate the wheel to change the values for EV, ISO, aperture and shutter.
2. Click W T to adjust the zoom.
3. Click any point in the frame for touch focus.
4. Click take a photo.

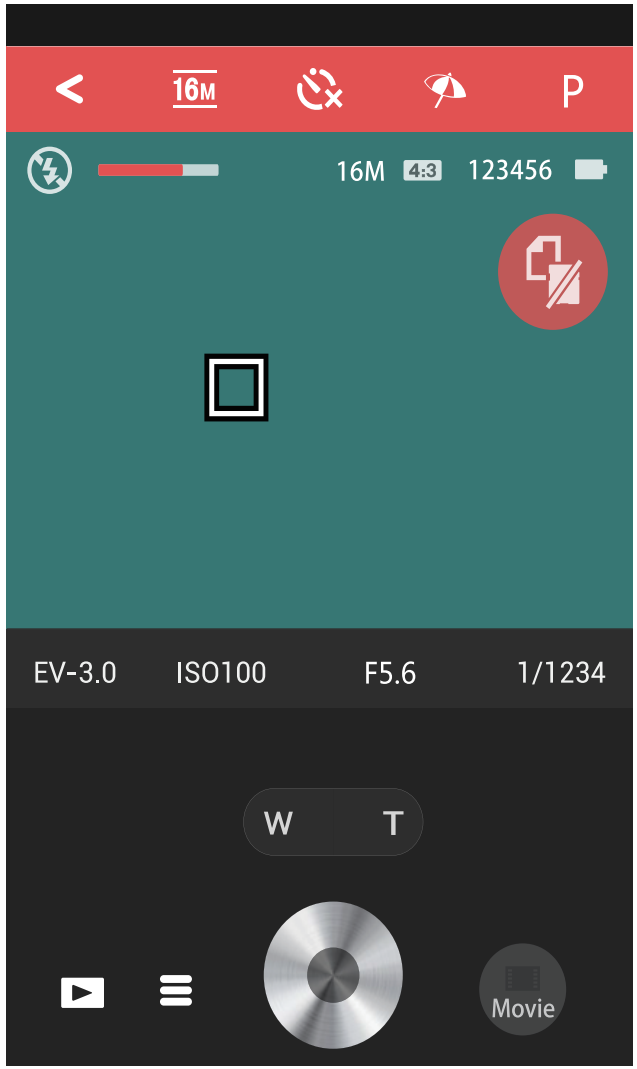

All files are saved on the memory card of the camera.

When using touch focus, a green box indicates a successful focus. A red box indicates failure to focus properly on the targeted location.

EN

Using the APP to record a video:

To enter the video recording interface, click Movie in the photo interface.

1. Click icons at the top of the interface to set corresponding parameters.
2. Click W T to adjust the focus.
3. Click to start recording and to stop.

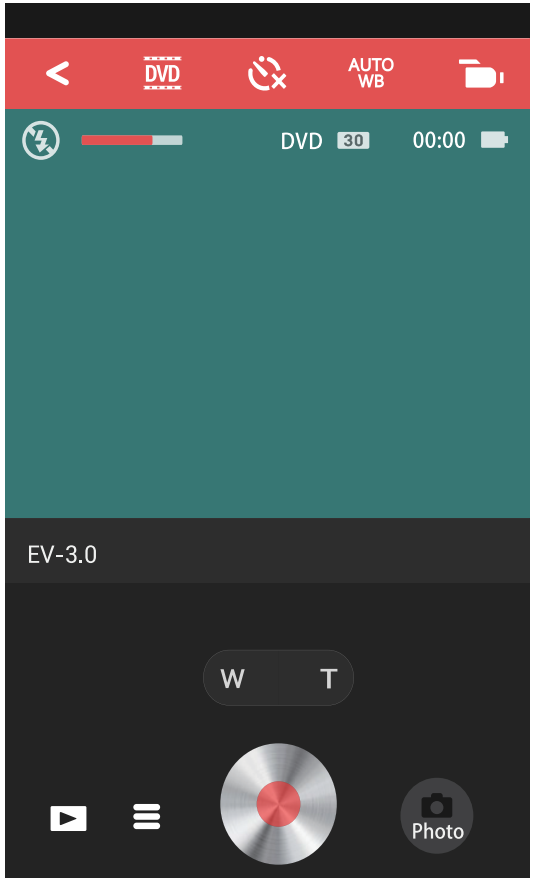

Recording time for FHD or HD is less than 29 minutes.

When selecting DVD, the maximum recordable time is 60 seconds.

EN

Menu on Shooting Interface

Reset : Use this setting to restore the camera to its original default settings.

Format : Formatting enables you to delete all contents in the memory card.

Change Password :You may change the eight-digit password needed to connect with your smart device.

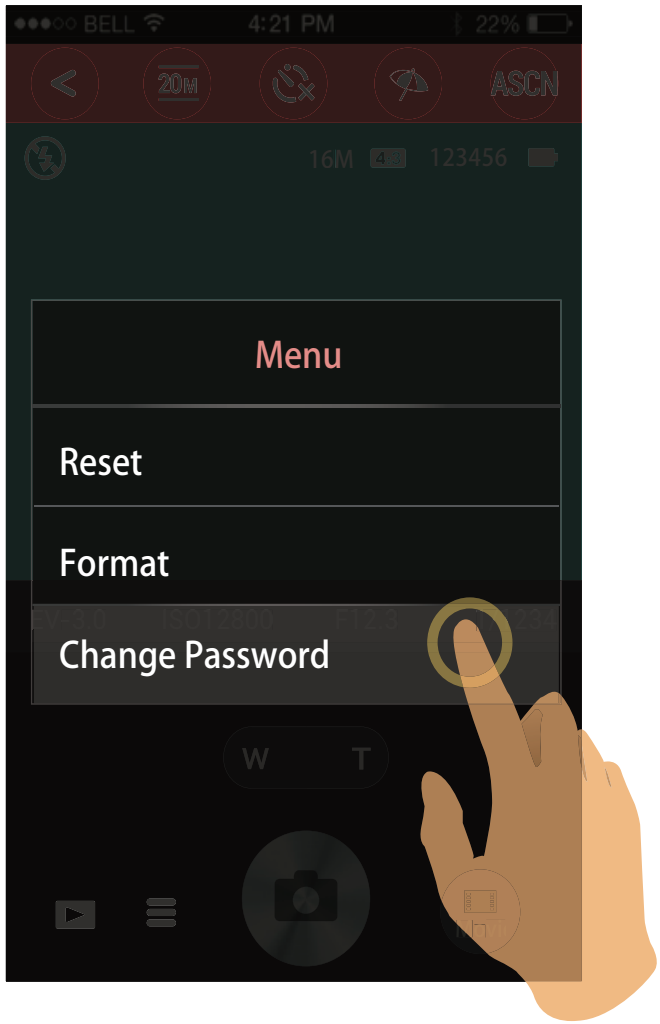

The data is unrecoverable after the memory card is formatted.

EN

Playback

Click ▶ on the photo or movie interface to enter the playback mode.

Selecting “Playback” on the APP homepage will also enable the playback mode.
There are two options in playback mode.

- Index playback (camera/smart device)
- Single playback (video/photo)

Index playback

1. Enter camera index playback screen in default.
   - : Return to photo of movie mode
   - : Enter the download mode to move the files in the camera into the smart device
   - : Select multiple files to delete
   - I : Switch between smart device and camera index playback screen.

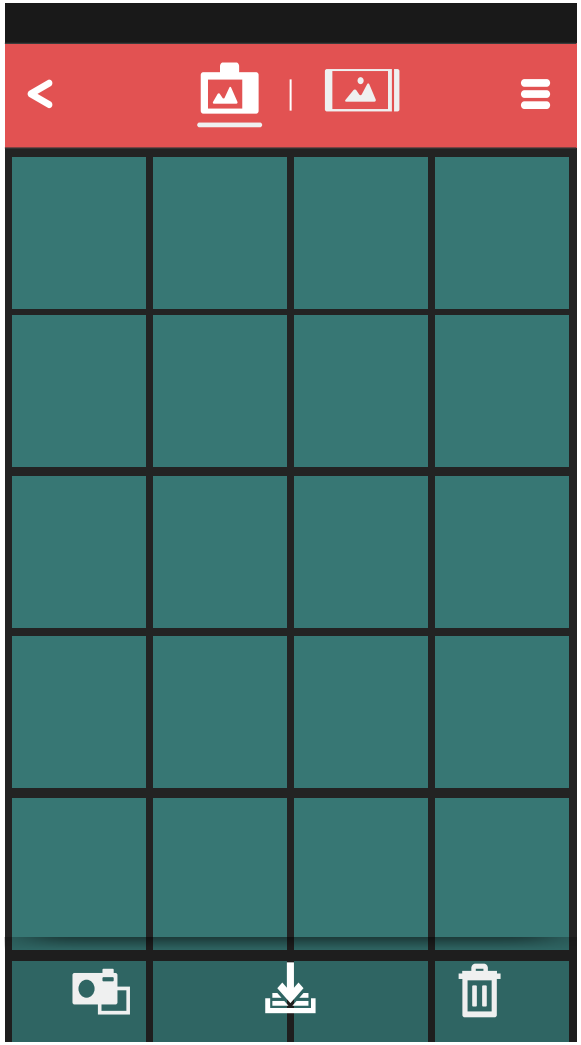

EN

2. The index playback interface of the smart device displays files downloaded from the camera to the smart device.
   - : Return to photo mode
   - : Multiple photo/video selection

Enter the selection interface after selecting , and touch thumbnails to select files. Touching the same thumbnail for the second time will cancel the selection.

- : Share files directly to social networks
- : Play back as a slide show
- : Delete the selected files

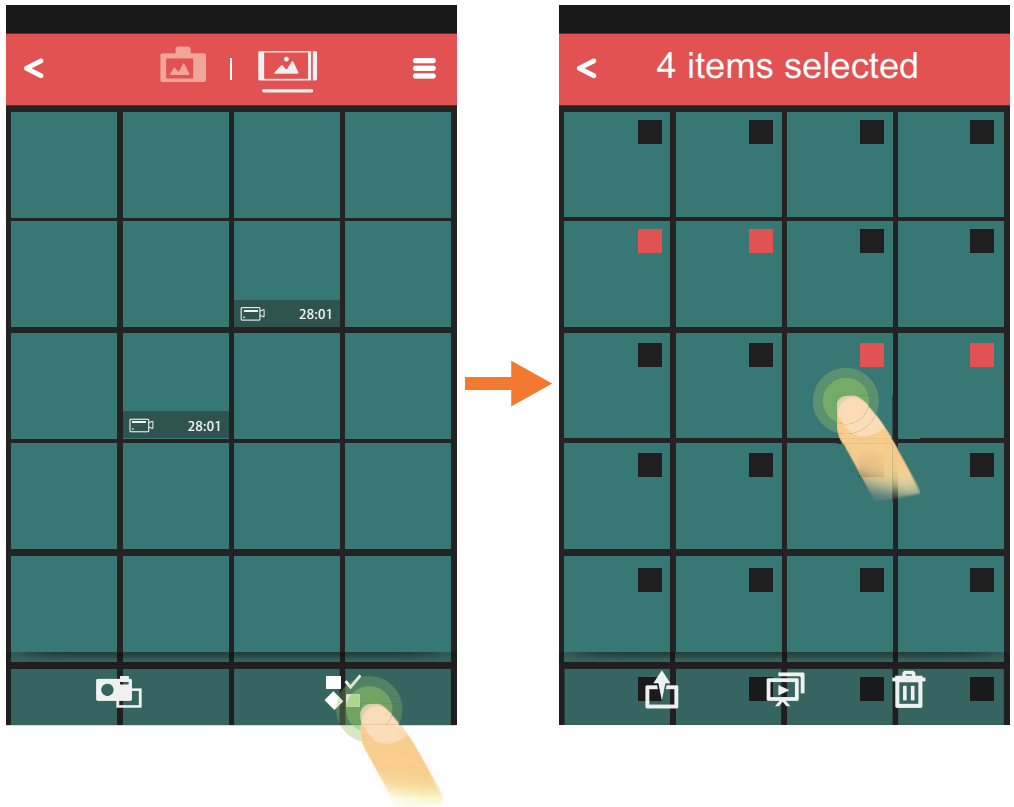

EN

EN

Settings function

Touch ☰ at the right upper corner of the interface to activate the settings interface. The download size can be set and cookies can be deleted.

Download function

In the index playback interface of the camera, click to enter the download mode. Select a file to begin downloading.

	: Downloading		: Wait downloading
	: The download is complete		: Cancel download
	: Failure to download		: Inaction

Share function

1. In the index playback interface of the smart device, click to enter the selection interface.
2. Select the files to be shared, and touch to activate the share option.

The transmission procedure for sharing is determined by the settings on the smart device.

Single Photo

- In the index playback interface, touch a thumbnail to enter the single playback interface.
- Browse files by swiping left or right.
- Click one photo file and enter the index playback interface, double click the photo to enter 100% zoom picture, and double click again to restore the original size.
- Use a two finger pinch/separation to zoom in or out of the image.

1. Executable operations in single photo playback of the files on the camera :
   - : Enter photo or video mode
   - : Download the current file to the smart device
   - : Delete the current file

In playing a video, iOS system interface has one more function than the Android system:

- ▶ / ❚❚ : Start play / Pause play

EN

2. Executable operations in single photo playback of the files on the smart device :

- : Rotate the photo
- : Share the current file directly to social networks
- : Play back as a slide show
- : Apply special effects to a photo or trim a video file
- : Delete the current file

EN

Edit function

1. Editing photo files:
   Click to enter the effects interface, where filter effects, brightness adjustment and modeling effects can be selected.

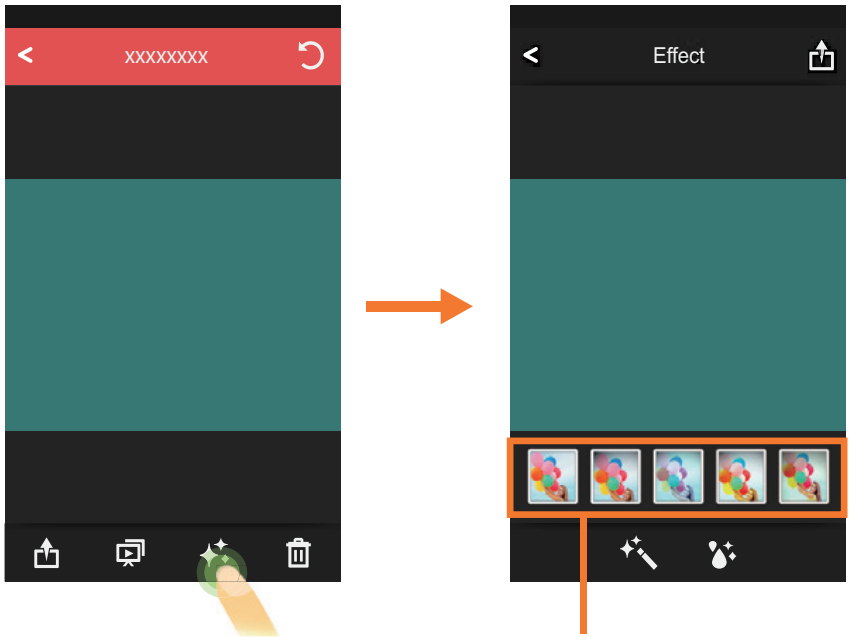

- Filter effects:
  The filter effects are divided into 23 types. More effect options can be viewed by sliding the effect option bar from side to side.

- Modeling effects:
  : Off
  : Centering on dot
  : Centering on strip (lateral direction)

First click to select your favorite effect, and then click on to select ”save”, upload to social networks options or “cancel”.

EN

EN

2. Editing movie files:

   Click ✦ to enter the trim interface.

   - and ▶ : Play movies
   - : Increase the number of shown
   - : Shorten the number of shown
   - : Trim starting point
   - : Trim finishing point

Steps of movie trim:

① Click or ▶ to start playing movies.

② Slide the quick browse bar from side to side to choose the appropriate frame. Then, choose or to increase or shorten the number of frames depending on the desired accuracy.

③ Slide the quick browse bar from side to side so that the vertical line stays on thumbnails needing to be cut, and click to select the trim starting point.

④ Slide the quick browse bar again to the left so that the vertical line stays on the thumbnails needing to be cut, and click to select the trim finishing point.

⑤ Click to select the ”save”, upload to social networks options or ”cancel”.

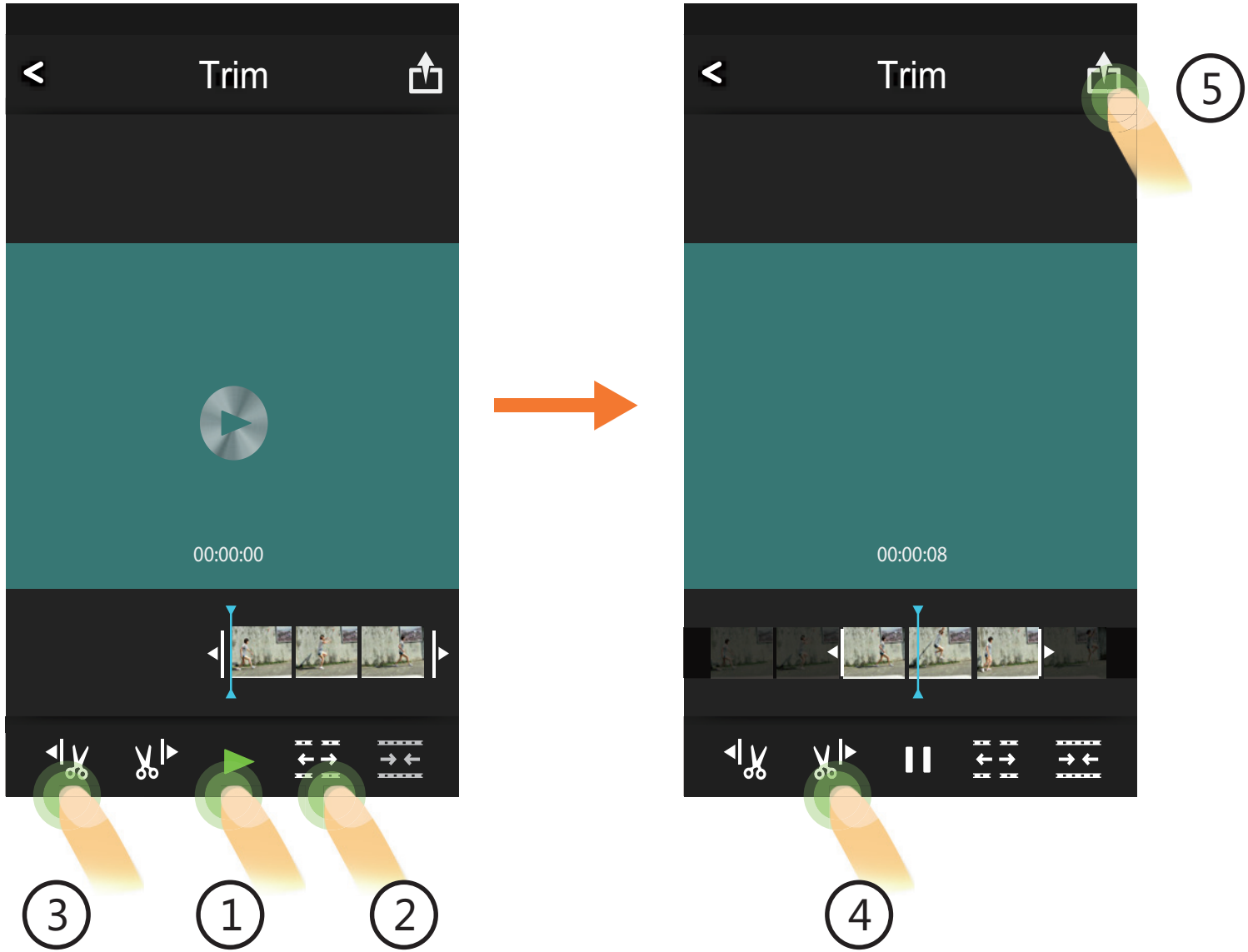

EN

EN

APP Home

- Playback: Enter playback state.
- Remote Viewfinder: Camera function controlled through smart device.
- About: Check the version of the APP.

About

Click “About” in the APP homepage to view APP version.

Click the link on screen to enter the website: www.kodakpixpro.com

Troubleshooting

- **Camera does not turn on**
  Correctly reinstall the battery per the instructions in this manual.
  The battery power is low, so please charge it or replace it with a fully charged battery.
- **Camera turns off suddenly during operation**
  The battery power is low. Charge it or replace it with a fully charged battery.
- **The camera starts up automatically.**
  If you enable the NFC by touching your smart device with the camera, the camera will start up automatically. This is normal.
- **Pictures are blurry.**
  Suggest using tripod.
- **Saving data to memory card is slow**
  Use a memory card with write Class higher than 6 to improve performance.
- **Connection Failed!**
  Please check the wireless settings of your smart device and the SSID and password you entered.
  Reinstall the APP.

Kodak Licensed Product

The Kodak trademark and trade dress are used under license from Kodak.

© 2014 by JK Imaging Ltd. All rights reserved.

JK Imaging Ltd. 1411 W. 190th Street, Suite 550,
Gardena, CA 90248, USA
www.kodakpixpro.com

Printed in China

CR288081199-1