Technische Daten

Bfluetooth-specficatfion	Versfion 3.0
Unterstützte Bluetooth-Profile	HSP (Headset Profile) , HFP (Hands-free Profile) und A2DP (Advanced Audio Distribution Profile)
Frequenzbereich	2,4 bis 2,48 GHz ISM-Band
Bluetooth-Reichweite	Bis zu 10 Meter (Klasse 2)
Abmessungen	107 (L) x 48 (B) x 15 (H) mm
Gewicht	ca. 60 g
Akku-Ladedauer	ca. 3 Stunden
Gesprächszeit	Bis zu 15 Stunden
Stand-by-Zeit	Bis zu 500 Stunden
Akku-Typ	Lithium-Ionen, 3,7 V, 500 mAh, aufladbar, austauschbar (kompatibel mit Nokia Akku BL-5B)
Ladegerät	DC 5 V, 300 mA

Änderungen vorbehalten!

Contents

BT Drive Free 114 17
Bluetooth technology 18
Safety and general information 18
Disposal notes 19
Scope of delivery 19
Installation at the sun visor 19
Inserting the battery 20
Battery information 20
Charging the battery 21
Overview 22
Switching on/off 22
Registering (pairing) and connecting with the cell phone 23
Multi-connection function 25
Establishing a connection with two cell phones 25
Using the BT Drive Free 114 26
Resetting the BT Drive Free 114 28
Light indicators and signal tones 28
Fault removal 29
Declaration of conformity 29
Warranty 29
Technical data 30

ENGLISH

BT Drive Free 114

This wireless Bluetooth hands-free system was developed specifically for users who want to use their cell phone while driving. The multi-connection function allows the simultaneous use of the BT Drive Free 114 with two cell phones. Its improved microphone system and DSP technology for echo cancelling and noise suppression achieve an excellent hand-free quality.

02_BTDriveFree114_gb.indd 16-17
17.11.14 16:37

Bluetooth technology

Bluetooth™ is a registered trademark of Bluetooth SIG, Inc. Bluetooth is a wireless communication technology with short range. It enables wireless connections between all compatible portable and stationary communication devices. The technology is based on a radio connection that ensures a fast and reliable transmission of voice and data information.
Bluetooth is oriented to the worldwide applicable standard for operating in the internationally recognised ISM frequency band (Industrial Scientific & Medical). Within the ISM band (2.4 GHz to 2.48 GHz), the Bluetooth transmission operates 1600 times per second between 79 different frequencies with a data transmission range of up to 10 metres (Class 2).

Safety and general information

- Carefully read the operating instructions and follow the instructions.
- Observe all locally applicable laws for the use of cell phones and hands-free systems while driving. Operate the BT Drive Free 114 only if the traffic situation allows it and you are not creating a risk for other traffic participants.
- To avoid any damages and malfunctions, do not drop the device from an elevated height.
- Protect the device against humidity, water and other liquids. If the device should have been exposed to water, humidity or other liquids, do not use it since it may lead to damages of the device and to injuries from electrical shock or explosion.
- Do not expose the device to extreme heat sources, such as direct sunlight. This can cause explosions as well as reduce the performance and/or service life of the battery.
- Do not make any changes or repairs to the device and do not attempt to disassemble it. (Particularly not on the battery since the risk of explosion exists.) It will immediately void the warranty.
- Do not place any heavy objects on the device.
- Use only the supplied charger.
- Repairs and service work may be performed only by a qualified service centre or the manufacturer.
- In case of extended non-use or thunderstorms, disconnect the device from the power supply.

Disposal notes

Use the return and collection systems available to dispose of the old device.
Do not discard any batteries in the household trash; instead, return them to the corresponding collection sites.

ENGLISH

Scope of delivery

The scope of delivery includes:
- BT Drive Free 114
- Lithium-ion battery
- USB charger cable
- Mounting clip for the sun visor
- Operating instructions

Installation at the sun visor

Sun visor flipped up towards the vehicle roof.

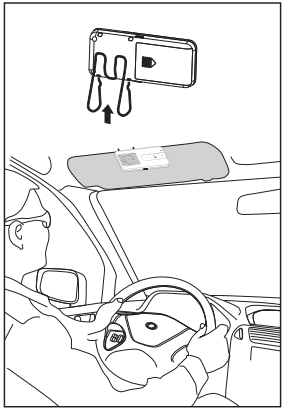

Sun visor flipped down towards the windshield.

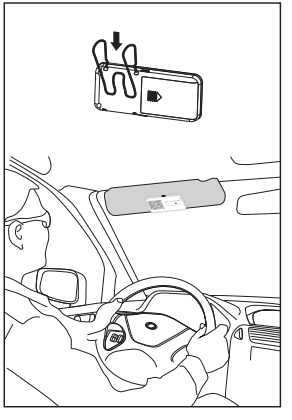

02_BTDriveFree114_gb.indd 18-19
17.11.14 16:37

Inserting the battery

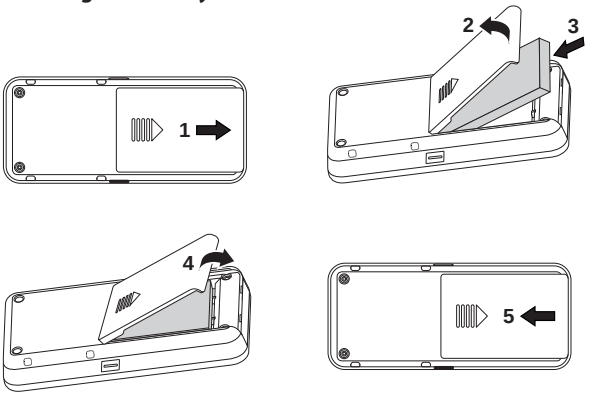

Battery information

The device is equipped with a lithium-ion battery. The battery is compatible with the Nokia battery BL-5B. The full performance of a new battery is not achieved until after two or three complete charging-discharging cycles. The battery can be charged and discharged several hundred times, but it loses its capacity over time.
Disconnect the BT Drive Free 114 from the power supply as soon as the battery is fully charged, since overcharging would reduce the service life of the battery. A charged battery loses its capacity if it is not used.
Important: Ensure that the battery is fully charged if you do not use the device for a longer period of time. To avoid a complete discharge of the battery, the BT Drive Free 114 should be charged at least every 3 months.

Charging the battery

The BT Drive Free 114 is operated with a rechargeable battery. Charge the battery completely before its first use. Read the section "Battery information" before starting the charging process.
You have to remove the BT Drive Free 114 from the sun visor for the charging procedure. Connect the BT Drive Free 114 with the vehicle charging adapter via the USB cable. Insert the vehicle charging adapter into the cigarette lighter of the vehicle. The BT Drive Free 114 can also be charged with the USB cable connected to the computer.
Note: As soon as the charger is connected, the BT Drive Free 114 switches off.

ENGLISH

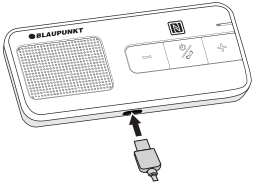

During the charging process, the MF button lights red. After the battery is fully charged, the MF button lights blue. The charging process of the battery lasts approx. 3 hours. Disconnect the BT Drive Free 114 from the charger after it has been charged.
A completely charged battery supports a talk time of up to 15 hours and a standby time of up to 500 hours. If the charge state of the battery becomes low, the MF button flashes red every 3 seconds and you hear a warning beep every 60 seconds.
Note: If connected to an iPhone, the icon on the display of the iPhone shows the battery status of the BT Drive Free 114.

02_BTDriveFree114_gb.indd 20-21
17.11.14 16:37

Overview

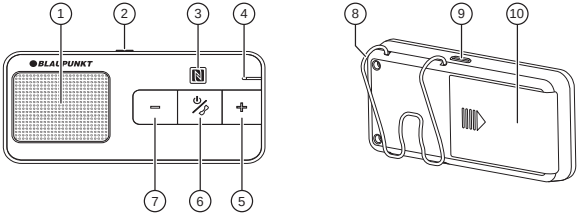

1. Loudspeaker
2. MODE button
3. NFC Slave sensor
4. Microphone
5. Increase volume (+)
6. MF button (illuminated multifunction button)
7. Decrease volume (–)
8. Mounting clip for the sun visor
9. Charging socket (micro USB port)
10. Battery compartment

Switching on/off

Switching on

To switch the unit on, press the MF button for approx. 3 seconds until you hear a high-pitched signal tone and the MF button lights blue. Afterwards, the MF button lights blue and the device is switched on.

Note: After switching on, the BT Drive Free 114 automatically connects with the last connected cell phone.

Switching off

To switch the unit off, press the MF button for approx. 3 seconds until you hear a low-pitched signal tone and the MF button lights red. Afterwards, the device is switched off.

Registering (pairing) and connecting with the cell phone

Before you can use the BT Drive Free 114, you must register and connect it with a Bluetooth-ready cell phone. Registering is a one-time process and required only for the first connection with the cell phone. The BT Drive Free 114 can be registered with up to eight cell phones and be connected simultaneously with two cell phones.

NFC smart pairing

The NFC smart pairing procedure is available for BT Drive Free 114 to make the pairing much simply and quickly.

Please ensure that your mobile phone's OS version is Android 4.1, Windows 8, Blackberry 7.0 or upper. The NFC sensor usually locates at the back of phone.

- Please enable the NFC function in the setting menu of your phone first.
- Unlock your phone's screen to enable NFC detection, and touch the NFC sensor area of BT Drive Free 114 to the back side of mobile phone. The mobile phone will emit tone prompt if detect the speaker closing, and the BT Drive Free 114 will turn on and enter pairing mode automatically.

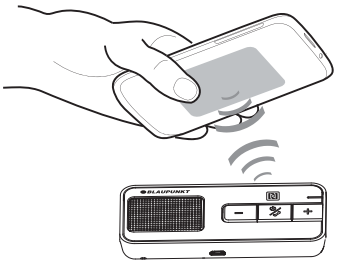

- Confirm the pairing request on the phone screen, then pairing will complete. Otherwise, please follow the general steps to complete pairing procedure.

ENGLISH

02_BTDriveFree114_gb.indd 22-23
17.11.14 16:37

General procedure

- Hold the BT Drive Free 114 within range of a Bluetooth-ready cell phone; the distance should not exceed a metre.
- The BT Drive Free 114 must be switched off.
- Press the MF button for approx. 6 seconds until you hear a low-pitched signal tone and the MF button intermittently flashes red and blue. The device is in registration mode.
- Activate the Bluetooth function of the cell phone and start the search for Bluetooth devices. (For further details, please read the operating instructions of your cell phone).
- From the list of devices found, select the "BT DF 114".
- If required, enter the PIN code "0000" and confirm the entry. If the pairing process was successful, you hear a signal tone and the MF button lights blue for 3 seconds. (Note: The PIN code is preprogrammed and cannot be changed.)
- After registering, the BT Drive Free 114 automatically connects with the cell phone. For some cell phones, you have to manually confirm the connection. Next, the BT Drive Free 114 changes to standby mode and the MF button flashes blue every 3 seconds.

Note: If the registering is not completed within 2 minutes, the BT Drive Free 114 switches off again. In this case, repeat the registering.

Multi-connection function

The multi-connection function allows the simultaneous use of the BT Drive Free 114 with two cell phones. This is advantageous for users with a personal and a business cell phone.

Establishing a connection with two cell phones

There are several options of connecting the BT Drive Free 114 with already registered cell phones.

- **Automatic connection**
  When switching on the BT Drive Free 114, a connection is automatically established with the two most recently connected cell phones.
- **Establishing a connection via the BT Drive Free 114**
  To manually establish a connection between the BT Drive Free 114 and the two most recently connected cell phones, press the MF button. The BT Drive Free 114 first connects itself with the most recently connected cell phone. Then it connects itself with the next most recently connected one.
- **Establishing a connection via the cell phone**
  If the cell phone is not one of the two most recently connected cell phones with the BT Drive Free 114, you have to establish the connection via the Bluetooth menu of the cell phone. After successful connection, you can establish another connection with a second cell phone. This allows you to determine the sequence of connections.

If two cell phones are connected with the BT Drive Free 114, the cell phone connected first is the first device and the other one the second device. Another connection can be established only after first disconnecting one of the two cell phones. The cell phone which is still connected afterwards becomes the first device in the sequence.

Note that voice dialing is available only for the first device and the operation for redialling the last number differs for the first and the second device. The other functions are executed the same way using the BT Drive Free 114 as a connection with only one cell phone.

02_BTDriveFree114_gb.indd 24-25 17.11.14 16:37

Using the BT Drive Free 114

After successfully completing the registration and charging the battery, the following functions can be executed:

Making a call

– **Voice dialing***
  To activate voice dialing, briefly press the MF button. You hear several signal tones. After the signal tone, speak the voice command. After the voice command has been recognized, the cell phone dials the number associated with it.
  Note: If two cell phones are connected with the BT Drive Free 114, the voice commands are directed only to the cell phone connected first.

– **Redialling the last number***
  Press the MF button twice. You hear a signal tone and the number dialled last is being redialled.
  Note: If two cell phones are connected with the BT Drive Free 114, hold the "–" button pressed for 2 seconds to dial the last number of the cell phone connected last.

– **Call origination via cell phone**
  Select the desired number as usual via the cell phone. The call is automatically transferred to the BT Drive Free 114.

Answering a call

To answer an incoming call, briefly press the MF button.

Ending a call

Briefly press the MF button to end a call.

Rejecting a call*

To reject a call, hold the MF button pressed until you hear a signal tone.

Adjusting the volume

During a phone call, adjust the volume with the buttons "+" and "–".

Muting the microphone

To mute the microphone during a call, briefly press the MODE button. The MF button flashes red every 10 seconds and you hear two signal tones. Press the MODE button again to cancel the muting.

Transferring a call

To transfer a call from the BT Drive Free 114 to the cell phone, press the MODE button for approx. 3 seconds. Repeat the step to transfer the call back to the BT Drive Free 114.

Note: With some cell phones, the connection is disconnected if you transfer the call to the cell phone. To transfer the call back to the BT Drive Free 114, you have to press the MF button instead of the MODE button.

Managing calls*

You can answer and manage two calls on one of the connected cell phones via the BT Drive Free 114.

You receive a call during an active call	
Hold the active call and answer the incoming call.	Press the MF button for 2 seconds.
End the active call and answer the incoming call.	Briefly press the MF button.
Continue the active call and reject the incoming call.	Press the MF button twice.
You are conducting two calls, an active one and one on hold	
Change between the active call and the one on hold.	Press the MF button for 2 seconds.
End the active call and answer the call on hold.	Briefly press the MF button.
Continue the active call and end the call on hold.	Press the MF button twice.
Continue the active call and answer the call on hold.	Press the "+" button for 2 seconds

Note: You do not have the option of managing several calls from two connected cell phones at the same time. When you receive a call on one cell phone while a call is active on the other cell phone, the active call is being ended when you answer the incoming call by briefly pressing the MF button.

Audio streaming

The BT Drive Free 114 supports the A2DP function. With an audio streaming connection, you can playback the music titles stored on the cell phone via the BT Drive Free 114. In case of a call, the music playback is interrupted and continued again after the call.

* The cell phone must support this function. You find the pertinent information in the operating instructions of the cell phone.

ENGLISH

02_BTDriveFree114_gb.indd 26-27 17.11.14 16:37

Resetting the BT Drive Free 114

The BT Drive Free 114 can be registered with up to eight cell phones. You can delete the registration list and reset the hands-free system to the factory settings.

- The BT Drive Free 114 must be switched on and no connection may exist to a cell phone.
- Press and hold down the "+" and "–" buttons simultaneously for approx. 10 seconds until the MF button intermittently flashes lights red and blue.
- If the registration list was deleted, the MF button stops flashing intermittently.
- After the next switch-on, the BT Drive Free 114 is in registration mode.

Light indicators and signal tones

Device status	MF button	Signal tones
Switching on	Lights blue for 3 seconds	1 high-pitched sound
Switching off	Lights red for 3 seconds	1 low-pitched sound
Registration mode	Flashes red and blue alternately	
Standby mode without connection	Flashes blue once every 3 seconds	
Standby mode with connection	Lights blue every 3 seconds	
Incoming call	Flashes blue	
Active call	Flashes blue once every 2 seconds	
Mute	Flashes red once every 10 seconds	2 tones every 10 seconds
Low battery	Flashes red once every 3 seconds	5 tones every 60 seconds
Battery is charging	Lights red. Lights blue after the battery is fully charged.	

Fault removal

If a connection between the BT Drive Free 114 and a cell phone cannot be established, observe the following:

- Ensure that the battery is charged.
- Ensure that the Bluetooth function of the cell phone is activated. You find more detailed information in the operating instructions of the cell phone.
- Check whether the BT Drive Free 114 is connected with the cell phone.
- Ensure that the distance between the BT Drive Free 114 and a registered cell phone is less than 10 metres and that no obstacles are between the two devices. Obstacles can interfere with the transmission or reduce the range.
- If none of these measures is successful, please contact the service department of your distributor.
- The BT Drive Free 114 meets the Bluetooth specification v4.0. The flawless function between the BT Drive Free 114 and Bluetooth-ready cell phones from different manufacturers and of different types cannot be guaranteed since it depends on the compatibility.

Declaration of conformity

The Blaupunkt Technology GmbH declares that this product complies with the basic requirements and the other relevant regulations of the directive 1999/5/EC. The declaration of conformity can be found on the Internet under www.blaupunkt.com.

Warranty

We provide a manufacturer's warranty for products bought within the European Union. For devices purchased outside the European Union, the warranty terms issued by our respective responsible domestic agency are valid. The warranty terms can be called up from www.blaupunkt.com.

02_BTDriveFree114_gb.indd 28-29 17.11.14 16:37

FCC WARNING

This device complies with Part 15 of the FCC Rules. Operation is subject to the following two conditions:
(1) This device may not cause harmful interference, and
(2) this device must accept any interference received, including interference that may cause undesired operation.

NOTE 1: Any changes or modifications to this unit not expressly approved by the party responsible for compliance could void the user's authority to operate the equipment.