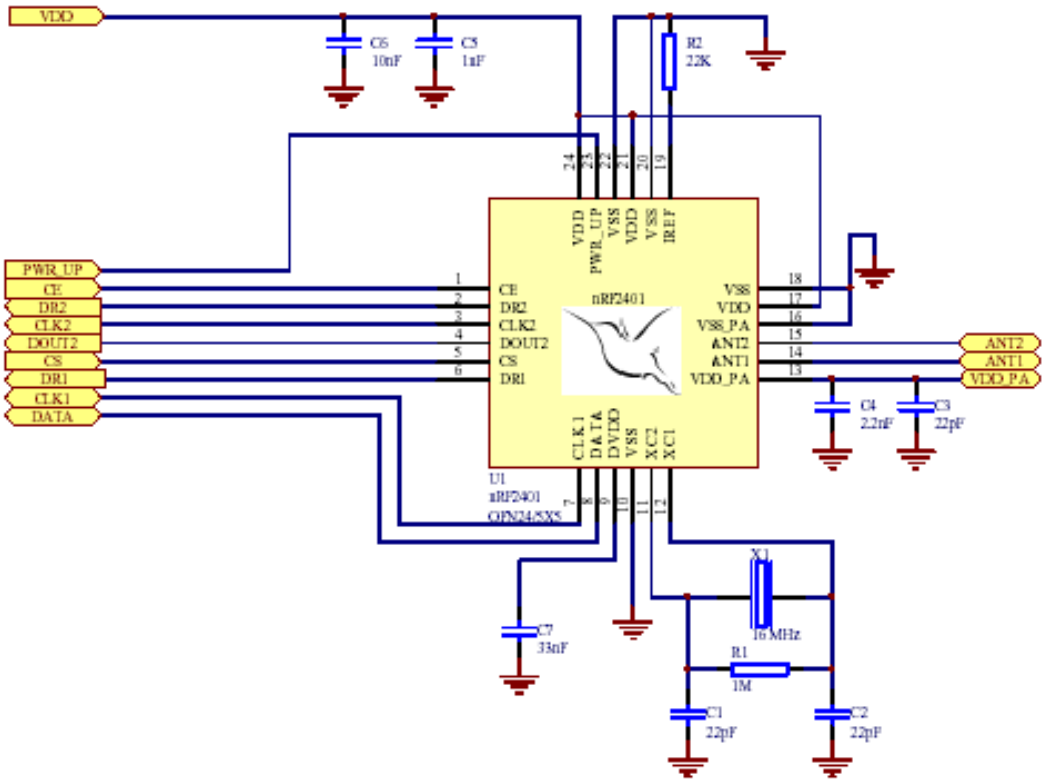
VDD
C6
10nF
C5
1nF
R2
22K
24
23
22
21
20
19
VDD
PWR_UP
VSS
VDD
VSS
IREF
PWR_UP
CE
DR2
CLK2
DOUT2
CS
DR1
CLK1
DATA
1
2
3
4
5
6
CE
DR2
CLK2
DOUT2
CS
DR1
nRF2401
VSS
VDD
VSS_PA
ANT2
ANT1
VDD_PA
18
17
16
15
14
13
ANT2
ANT1
VDD_PA
C4
2.2nF
C3
22pF
CLK1
DATA
DVDD
VSS
XC2
XC1
U1
nRF2401
QFN24/5X5
7
8
9
10
11
12
X1
16 MHz
C7
33nF
R1
1M
C1
22pF
C2
22pF

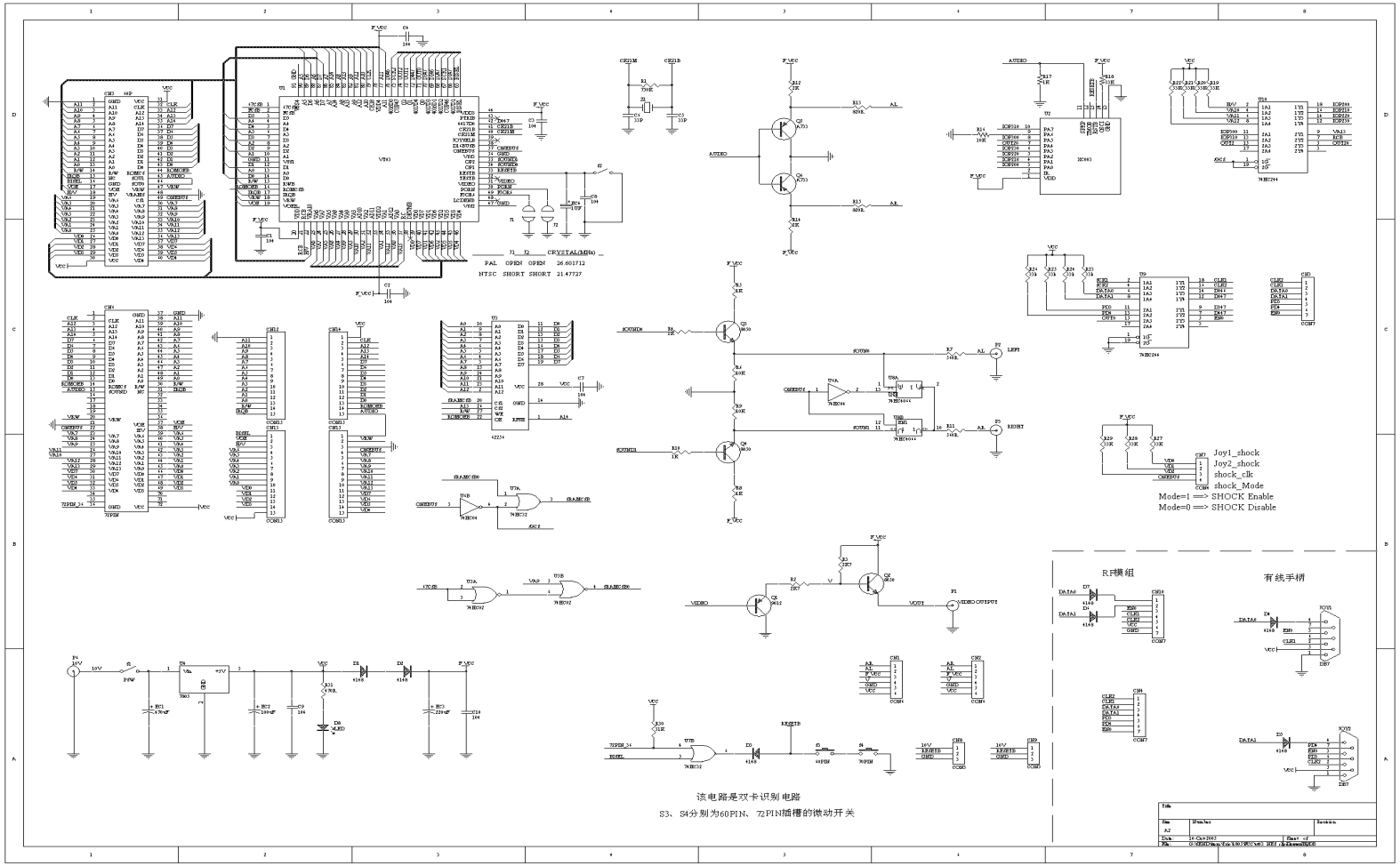
T1 T2 CRYSTAL(MHz)
PAL OPEN OPEN 26.601712
NTSC SHORT SHORT 21.47727
Joy1_shock
Joy2_shock
shock_clk
shock_Mode
Mode=1 ==> SHOCK Enable
Mode=0 ==> SHOCK Disable
R模组
有线手柄
该电路是双卡识别电路
S3、S4分别为60PIN、72PIN插槽的微动开关