SmartAnt High Gain Ethernet Adapter for 802.11 b/g

(SAA04-05224A,SAA04-05224A-05224A-EU)

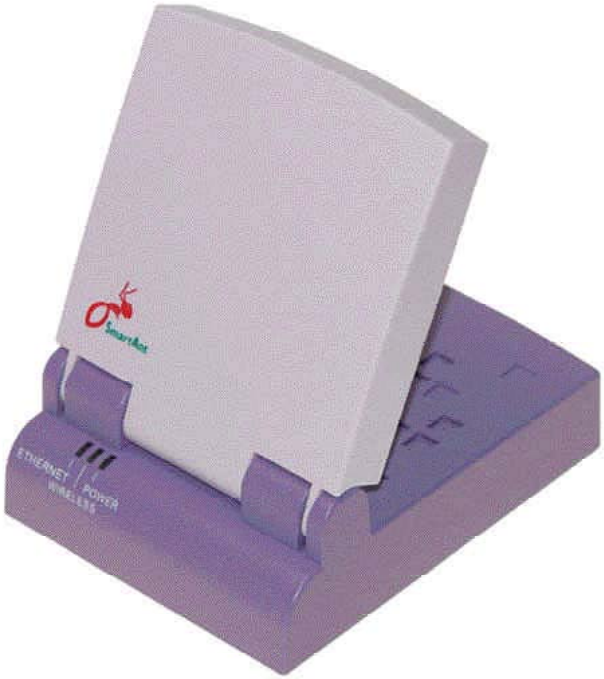

User's Manual

Federal Communications Commission Statement

This device complies with Part 15 of the FCC Rules. Operation is subject to the following two conditions:

- This device may not cause harmful interference, and
- This device must accept any interference received, including interference that may cause undesired operation.

This equipment has been tested and found to comply with the limits for a class B digital device, pursuant to Part 15 of the Federal Communications Commission (FCC) rules. These limits are designed to provide reasonable protection against harmful interference in a residential installation. This equipment generates, uses, and can radiate radio frequency energy and, if not installed and used in accordance with the instructions, may cause harmful interference to radio communications. However, there is no guarantee that interference will not occur in a particular installation. If this equipment does cause harmful interference to radio or television reception, which can be determined by turning the equipment off and on, the user is encouraged to try to correct the interference by one or more of the following measures:

- Reorient or relocate the receiving antenna.
- Increase the separation between the equipment and receiver.
- Connect the equipment into an outlet on a circuit different from that to which the receiver is connected.
- Consult the dealer or an experienced radio/TV technician for help.

WARNING! The use of a shielded-type power cord is required in order to meet FCC emission limits and to prevent interference to the nearby radio and television reception. It is essential that only the supplied power cord be used. Use only shielded cables to connect I/O devices to this equipment. You are cautioned that changes or modifications not expressly approved by the party responsible for compliance could void your authority to operate the equipment.

Reprinted from the Code of Federal Regulations #47, part 15.193, 1993. Washington DC: Office of the Federal Register, National Archives and Records Administration, U.S. Government Printing Office.

Canadian Department of Communications

This digital apparatus does not exceed the Class B limits for radio noise emissions from digital apparatus set out in the Radio Interference Regulations of the Canadian Department of Communications.

This Class B digital apparatus complies with Canadian ICES-003. Cet appareil numérique de la classe B est conforme à la norme NMB-003 du Canada.

FCC Radio Frequency Exposure Caution Statement

In order to maintain compliance with the FCC RF exposure guidelines, this equipment should be installed and operated with minimum distance **20cm** between the radiator and your body. Use only with supplied antenna. Unauthorized antenna, modification, or attachments could damage the transmitter and may violate FCC regulations. Any changes of modifications not expressly approved by the grantee of this device could void the users authority to operate the equipment.

Installation and use of this Wireless LAN device must be in strict accordance with the instructions included in the user documentation provided with the product. Any changes or modifications (including the antennas) made to this device that are not expressly approved by the manufacturer may void the user's authority to operate the equipment. The manufacturer is not responsible for any radio or television interference caused by unauthorized modification of this device, or the substitution or attachment of connecting cables and equipment other than manufacturer specified. It is the responsibility of the user to correct any interference caused by such unauthorized modification, substitution or attachment. Manufacturer and its authorized resellers or distributors will assume no liability for any damage or violation of government regulations arising from failing to comply with these guidelines.

This device and its antenna(s) must not be co-located or operating in conjunction with any other antenna or transmitter.

Declaration of Conformity (R&TTE directive 1999/5/EC)

The following items were completed and are considered relevant and sufficient:

- Essential requirements as in [Article 3]
- Protection requirements for health and safety as in [Article 3.1a]
- Testing for electric safety according to [EN 60950]
- Protection requirements for electromagnetic compatibility in [Article 3.1b]
- Testing for electromagnetic compatibility in [EN 301 489-1] & [EN 301]
- Testing according to [489-17]
- Effective use of the radio spectrum as in [Article 3.2]
- Testing for radio test suites according to [EN 300 328-2]

Table of Contents

1.1 Welcome! 5

1.2 Package contents 5

1.3 Features 6

1.3.1 Top view 6

1.3.2 Bottom view 7

1.3.3 Rear view 7

1.4 LED indicators 8

1.5 Recommended network settings 9

1.5.1 Access Point mode 9

1.5.2 Ethernet adapter mode 10

2.1 System requirements 13

2.2 Device installation 13

2.2.1 Before you proceed 13

2.2.2 Using DC power 14

2.2.3 Using USB bus power 15

2.3 Placement 16

Wall mounting 16

2.4 Operating range 16

2.4.1 Range 16

2.4.2 Site survey 17

2.5 Roaming information 17

3.1 Installing the utilities 18

3.2 Wireless Setting Utility 19

3.2.1 Launching the Wireless Setting Utility 19

3.2.2 Using the Wireless Setting Utility 20

3.3 Web Configuration utility 26

3.3.1 Adjusting the TCP/IP settings 26

3.3.2 Launching the Web Configuration utility 28

3.3.3. Changing the access point (AP) configuration 29

3.3.4 Changing the Ethernet adapter configuration 39

3.4 Firmware Restoration 52

4.2 Replacing the computer Ethernet cables 53

4.3 Replacing cable connections of other devices 54

4.4 Sharing Internet connection with other PCs 54

1.1 Welcome!

Thank you for choosing the SmartAnt SAA04-05224A series. This manual can use for SAA04-05224A and SAA04-05224A-EU. (mention as SAA04-05224A in following chapters.) The SmartAnt SAA04-05224A is a compact easy-to-install Ethernet adapter. Implementing the IEEE 802.11g standard for wireless LAN (WLAN), the SmartAnt SAA04-05224A is capable of up to 54Mbps data transmission rate using the Direct Sequence Spread Spectrum (DSSS) and the Octogonal Frequency Division Multiplexing (OFDM) technologies.

The SmartAnt SAA04-05224A supports Infrastructure and Ad-hoc modes giving you flexibility on your existing or future wireless network configurations.

To provide efficient security to your wireless communication, SmartAnt SAA04-05224A comes with a 64-bit/128-bit Wired Equivalent Privacy (WEP) encryption and Wi-Fi Protected Access (WPA) features.

With these and many more, SmartAnt SAA04-05224A is sure to keep you ahead in the world of wireless computing.

1.2 Package contents

Check the following items in your SmartAnt SAA04-05224A package. Contact your retailer if any item is damaged or missing.

- ☑ High gain Ethernet adapter
- ☑ Power adapter
- ☑ RJ-45 cable
- ☑ USB Cable
- ☑ Mounting set
- ☑ Utility CD
- ☑ Quick Installation Guide

Unless otherwise specified, the term “ddevice” in this User Guide refers to the SmartAnt SAA04-05224A.

1.3 Features

The SmartAnt SAA04-05224A employs the DSSS and OFDM technologies to transmit and receive signals through radio waves on the 2.4 GHz band.

Here are other SmartAnt SAA04-05224A features:

- Reliable data transfer rates of up to 54Mbps
- Secure data transmission via Wired Equivalent Privacy (WEP) and WiFi Protected Access (WPA) encryptions
- Operating distance of up to 260ft (80m) indoors and 2000 ft (620m) outdoors
- Equipped with mounting set for window mount and wall installation
- Dual power mode (DC or USB bus-powered)
- Windows® 2000/XP compatible

1.3.1 Top view

LEDs. The SmartAnt SAA04-05224A comes with three LED indicators (Ethernet, Wireless, and Power).

Air vents. These vents provide ventilation to the device.

1.3.2 Bottom view

Mounting hook. Use the mounting hook to install the device on concrete or wooden surfaces using a roundhead screw.

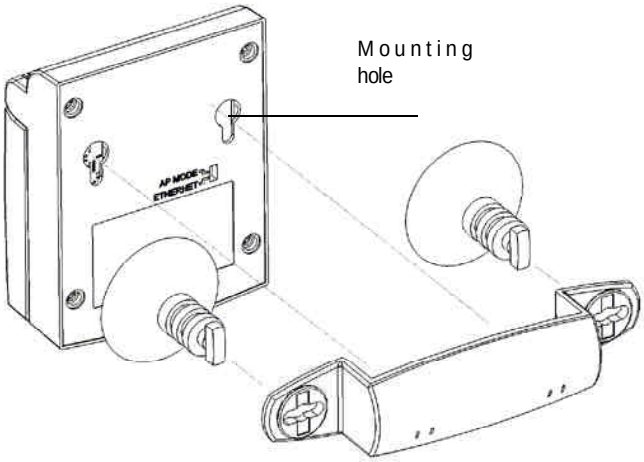

1.3.3 Rear view

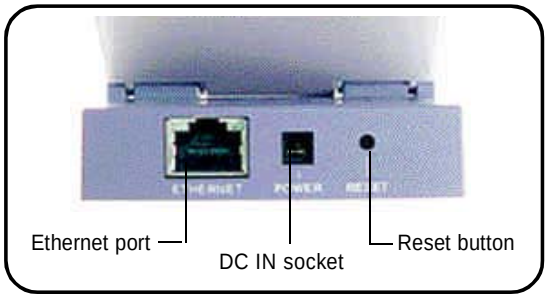

Ethernet port. This port connects the supplied RJ-45 plug and cable.

Power socket. This socket connects the power adapter plug.

Reset button. Press this button for more than five seconds to load the default values. In Ethernet adapter mode, press this button for less than five seconds to connect to the first saved wireless connection in the profile table.

1.4 LED indicators

The SmartAnt SAA04-05224A comes with a Ethernet, Wireless, and Power LED indicators. Refer to the table below for LED indications.

LED	Status	Indication
Ethernet	On	The device is connected to an Ethernet network.
	Off	The device is off or not connected to an Ethernet network.
Wireless	On	The device is associated with an AP or other wireless device.
	Off	The device is not associated with an AP or other wireless device.
	Blinking	The device is transmitting or receiving data.
Power	On	The device is on and ready.
	Off	The device is off or performing boot sequence.
	Blinking	Firmware upgrade failed.

1.5 Recommended network settings

The SmartAnt SAA04-05224A can be configured as a wireless Ethernet adapter. In Ethernet adapter mode, the device connects to:

1. A wireless device(s) (Ad-hoc mode), or
2. An access point (Infrastructure network type)

Determine your network settings before installing the SmartAnt SAA04-05224A. The following network settings are recommended.

1.5.1 Ethernet adapter mode

Ad-hoc network

When in Ad-hoc network, the SmartAnt SAA04-05224A connects to another wireless device. No access point (AP) is present in this wireless environment.

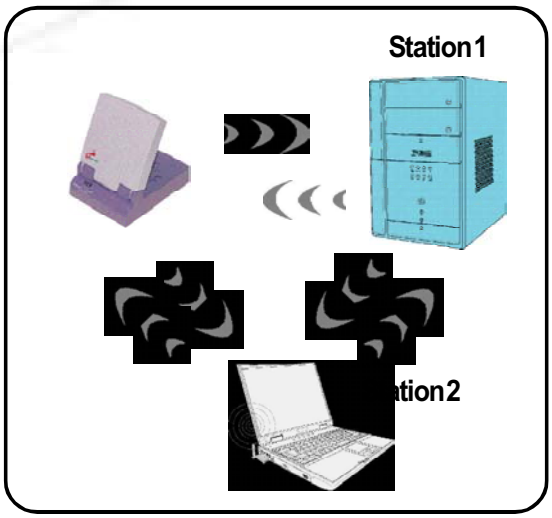

Infrastructure mode

When in Infrastructure mode, the wireless network is centered on an access point (AP) that provides a central link for wireless clients to communicate with each other or with a wired network.

In this setup, the SmartAnt SAA04-05224A connects to an AP using a single or multiple IP to establish connection to a wired or wireless LAN.

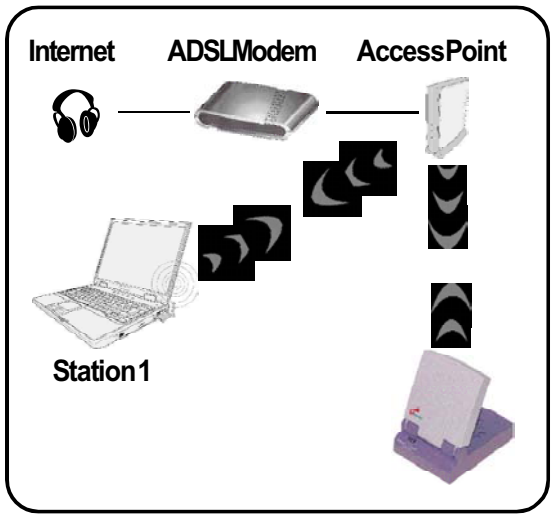

Single IP bridge environment

In a single IP bridge environment, the SmartAnt SAA04-05224A connects to an access point using a single IP address.

In this setup, the MAC cloning feature may be enabled to support certain applications and devices, such as Xbox and PlayStation® game consoles, that use the MAC address to communicate with other devices. MAC cloning allows the SmartAnt SAA04-05224A to communicate with other devices in a wireless network using the MAC address of the host computer instead of its own.

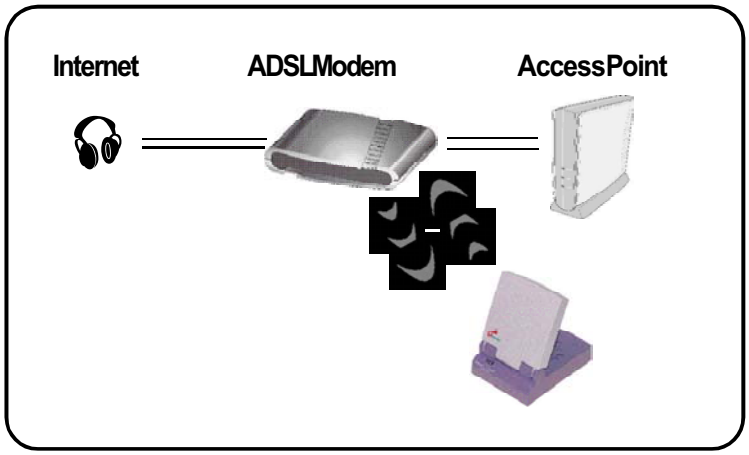

Multiple IP bridge environment

In a multiple IP bridge environment, the SmartAnt SAA04-05224A connects two or more wired devices to a wireless network from a hub or a switch.

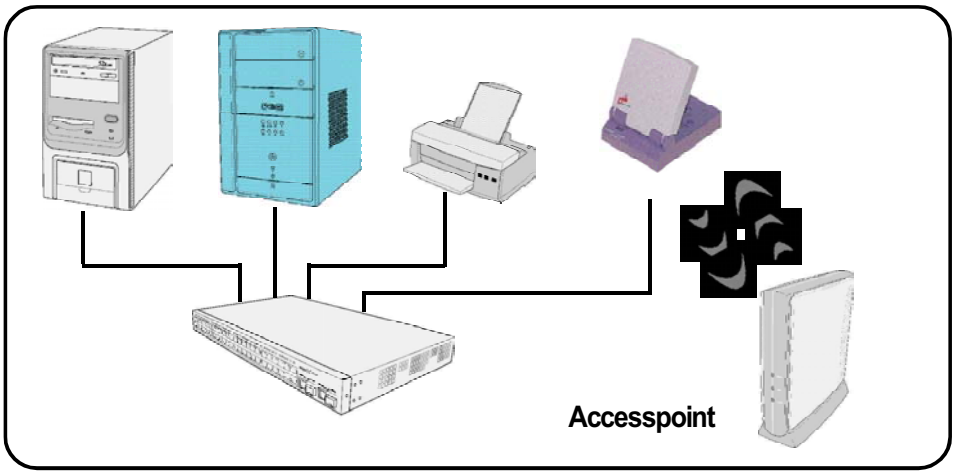

You must disable the MAC cloning feature when you set the device in Ethernet adapter mode under this environment. Enabling MAC cloning under this environment results to undefined and incorrect bridge behavior.

2.1 System requirements

Before installing the SmartAnt SAA04-05224A, make sure that your system/network meets the following requirements:

- An Ethernet RJ-45 port (10Base-T/100Base-TX)
- At least one IEEE 802.11b/g device with wireless capability
- An installed TCP/IP and Internet browser

2.2 Device installation

Follow these instructions to install the SmartAnt SAA04-05224A.

1. Install the device utilities from the support CD.
2. Connect the device to your computer, network hub, switch, or router.

2.2.1 Before you proceed

Take note of the following guidelines before installing the SmartAnt SAA04-05224A.

- The length of the Ethernet cable that connects the device to the network (hub, ADSL/cable modem, router, wall patch) must not exceed 100 meters.
- Place the device on a flat, stable surface as far from the ground as possible
- Keep the device clear from metal obstructions and away from direct sunlight.
- Keep the device away from transformers, heavy-duty motors, fluorescent lights, microwave ovens, refrigerators, and other industrial equipment to prevent signal loss.
- Install the device in a central area to provide ideal coverage for all wireless mobile devices.
- Install the device at least 20cm from a person to insure that the product is operated in accordance with the RF Guidelines for Human Exposure adopted by the Federal Communications Commission.

2.2.2 Using DC power

1. Insert one end of the supplied RJ-45 cable to the SAA04-05224A Ethernet port.
2. Insert the other end of the RJ-45 cable to a network hub, switch, router, or wall patch Ethernet port.
3. Connect the power adapter plug to the SAA04-05224A Power socket.
4. Connect the SAA04-05224A power adapter to a wall socket.
5. Connect the network hub, switch, or router power adapter plug to the Power socket of the device.
6. Connect the network hub, switch, or router power adapter to a wall socket.

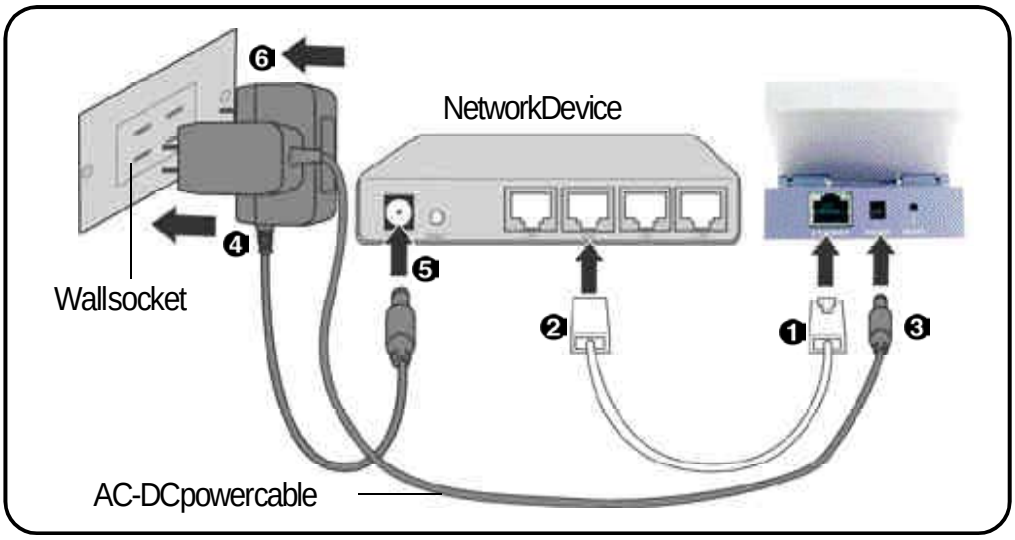

2.2.3 Using USB bus power

Replace the AC-DC power cable with a USB power cable and insert into an available USB port on any device (computer, notebook, network hub, switch, or router) and turn ON that device.

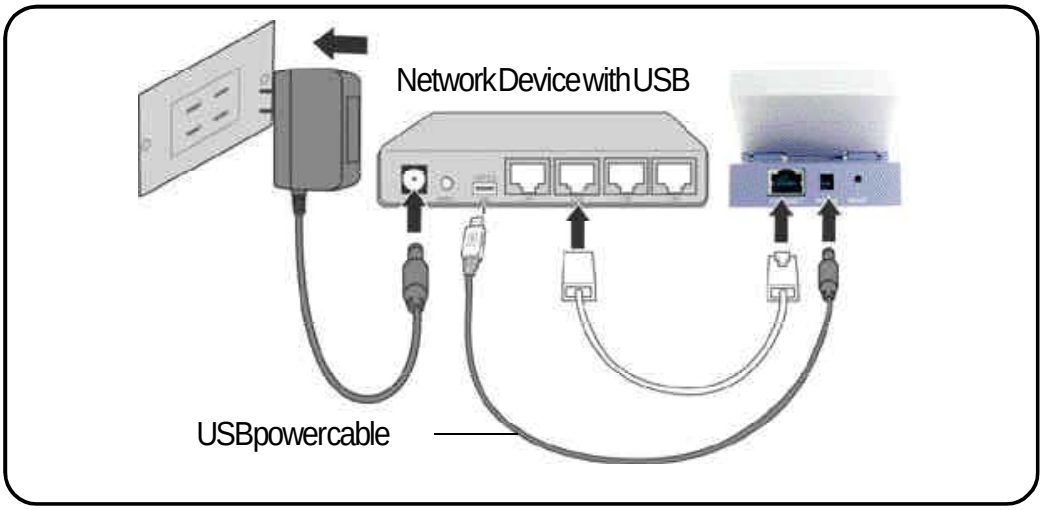

2.3 Placement

Wall mounting

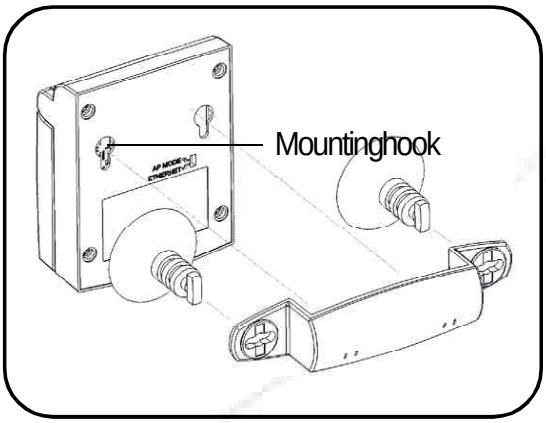

Aside from desktop placement, you can install the SmartAnt SAA04-05224A vertically on a wall using the mounting hook at the bottom side of the device.

To mount the device on a wall:

1. Tighten a screw on the wall until only 1/4 inch is showing.
2. Latch the mounting hook on the screw.

Window mounting

Using the window mount sets, SmartAnt SAA04-05224A can be installed on flat window class, and receive wireless signals from either side of the window.

To mount the device on a window class:

1. Compose window mount set. Reverse the suck discs, if the signal is from the other side of the window.
2. Compose the window mount set on the middle of the bottom of the device.
3. Press both suck discs onto the window class. Make sure the device does not fall before leave you hands.

Adjust the screw if you cannot latch the device or if the device is too loose.

2.4 Operating range

2.4.1 Range

The SmartAnt SAA04-05224A range is dependent on the operating environment. Every home or office layout varies in obstacles, barriers, or wall types which may reflect or absorb radio signals. For example, two 802.11b devices in an open space may achieve an operating distance of up to 1000 meters, (3280 feet) while the same devices may only achieve up to 300 (984 feet) meters of range when used indoors.

The device automatically adjusts the data rate to maintain an operational wireless connection. A wireless device that is close to an AP may operate at higher speeds than a device far from the AP. You can configure the data rates that a device uses. If you limit the range of data rates available to the an AP, you may reduce the effective range of the wireless LAN coverage.

2.4.2 Site survey

A site survey (utility provided with the SmartAnt SAA04-05224A) analyzes the installation environment and provides users with recommendations for equipment and its placement. The optimum placement differ depending on the device design and specifications.

3.1 Installing the utilities

The support CD contains the utilities for configuring the SmartAnt SAA04-05224A.

To install the device utilities in your computer:

1. Insert the support CD to the optical drive.
2. Click **Install Wireless AP Utilities** when the Wireless Access Point SAA04-05224A installation window appears.
3. The device utilities are copied to your computer.

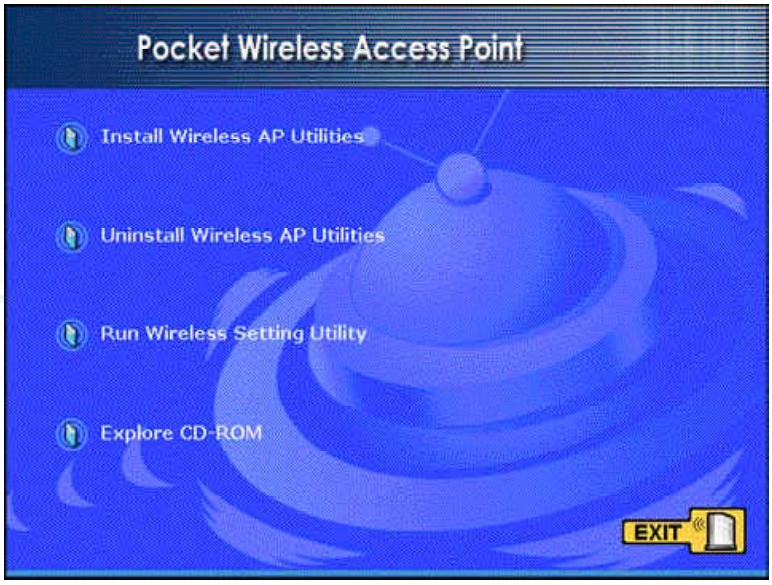

If Autorun is NOT enabled in your computer, browse the contents of the support CD and double click the Setup.exe file to run the CD.

Other support CD options

Uninstall WLAN AP Utilities. Click this option to uninstall the SmartAnt SAA04-05224A utilities from your system.

Run Wireless Setting Utility. Click this option to run the Wireless Setting Utility.

Explore this CD. Click this option to explore the support CD contents & User Manual in PDF.

Click **EXIT** to close the installation window.

3.2 Wireless Settings Utility

The Wireless Settings Utility allows easy configuration of the SmartAnt SAA04-05224A. You can launch the Wireless Settings Utility directly from the support CD or from the Windows® desktop.

3.2.1 Launching the Wireless Settings Utility

From the support CD

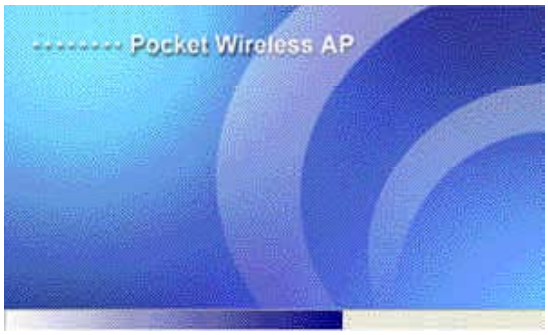

To launch the Wireless Settings Utility from the support CD:

1. Insert the support CD to the optical drive.
2. Click the **Run Wireless Settings Utility** option when the installation window appears. Refer to the illustration on the previous page.
3. The Wireless Settings Utility window appears.

From the Windows® desktop

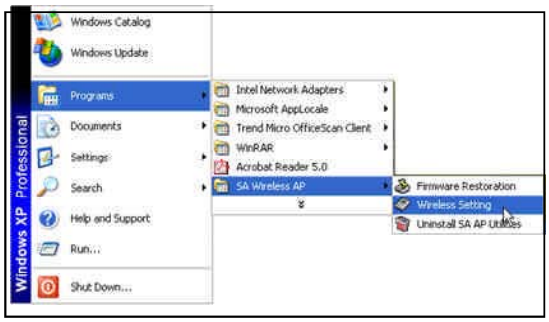

1. Install the device utilities.
2. From the Windows® desktop, click **Start** > **All Programs** > **Wireless AP** > **Wireless Setting**.

   or

   Double-click the **Wireless Setting** icon.

3. The Wireless Setting Utility window appears.

3.2.2 Using the Wireless Settings Utility

To set the device as an Ethernet adapter

Make sure that you switched the SAA04-05224A to Ethernet adapter mode before launching the Wireless Setting Utility. Use the mode switch to change the device operating mode.

1. The utility auto-detects and displays the SAA04-05224A Ethernet adapter settings. Click **Configure** to continue.

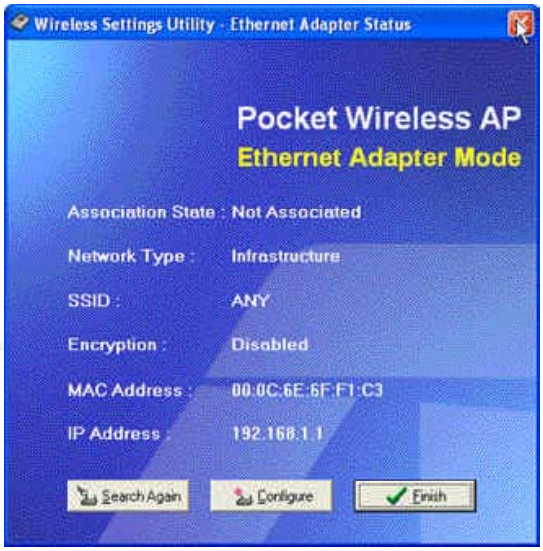

2. Log on to the configuration window using the password (**admin**), check the **Remember my password** option, then click **OK**.

3. Select a wireless network from the **Available Networks** field, then click **Configure**.

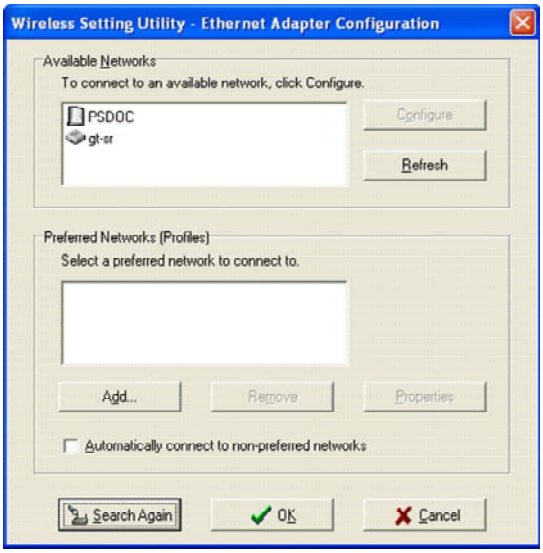

Each wireless network is preceded by an icon for easy identification. Refer to the table on the next page for icon indications.

Click Add to connect to another wireless network not listed in the field.

Table 3-1: Wireless network icon indications

Icon	Indicates that
	the wireless network is an access point with no encryption
	the wireless network is an access point with enabled encryption
	the SAA04-05224A is connected to this access point with no encryption
	the SAA04-05224A is connected to this access point with enabled encryption
	the wireless network is a wireless device with no encryption
	the wireless network is a wireless device with enabled encryption
	the SAA04-05224A is connected to this wireless device with no encryption
	the SAA04-05224A is connected to this wireless device with enabled encryption

4. The SAA04-05224A automatically adjusts to the SSID and channel settings of the selected wireless network. Click **OK**.

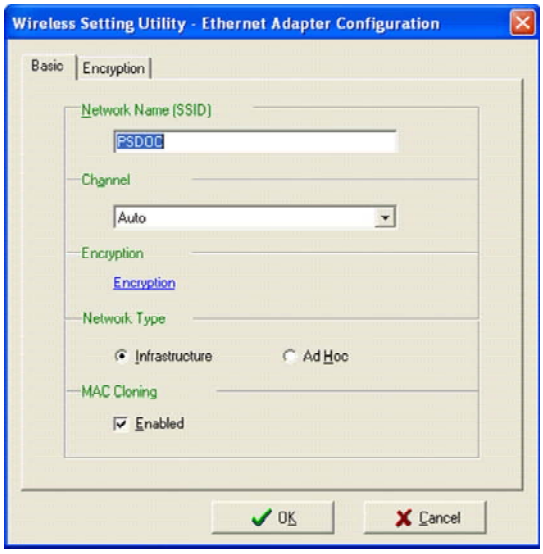

5. The selected wireless network appears in the **Preferred Networks** field. Select the network, then click **OK**.

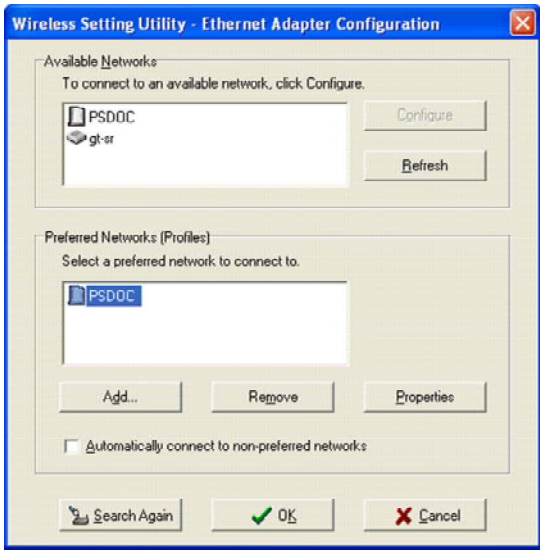

If the selected network has enabled encryption, use the Encryption tab to set the SAA04-05224A encryption settings the same with the selected network. The encryption settings of the network and the SAA04-05224A must be the same to establish connection.

6. The SAA04-05224A connects to the selected wireless network.

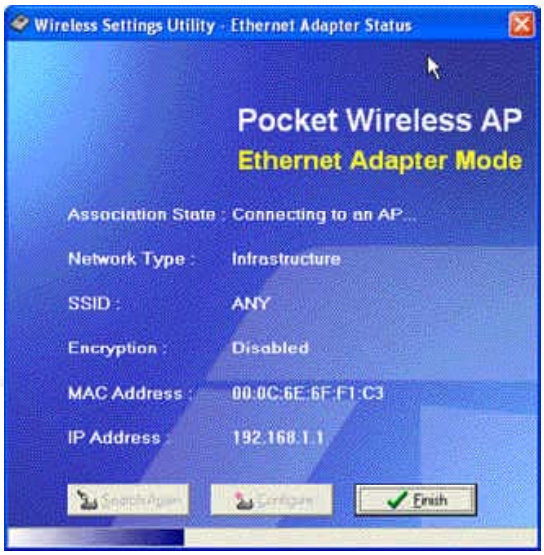

7. The utility displays the SAA04-05224A status when connection is established. Click **Finish** to close the utility.

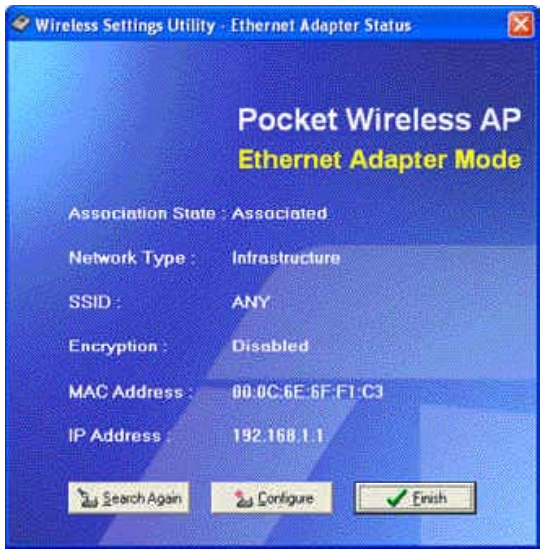

3.3 Web Configuration utility

The Web Configuration utility allows you to configure the SmartAnt SAA04-05224A using a web browser on your computer. The following sections provide information on how to launch and use this utility.

3.3.1 Adjusting the TCP/IP settings

By default, the IP address of the SmartAnt SAA04-05224A is 192.168.1.1, and the Subnet Mask is 255.255.255.0. To access the configuration utility, assign a different IP address to the network adapter where the SmartAnt SAA04-05224A is connected.

To adjust the TCP/IP settings of the network adapter:

1. Right-click the **My Network Places** icon in the Windows® desktop, then select **Properties** from the pop-up menu. The **Network and Dial-up Connections** window appears.

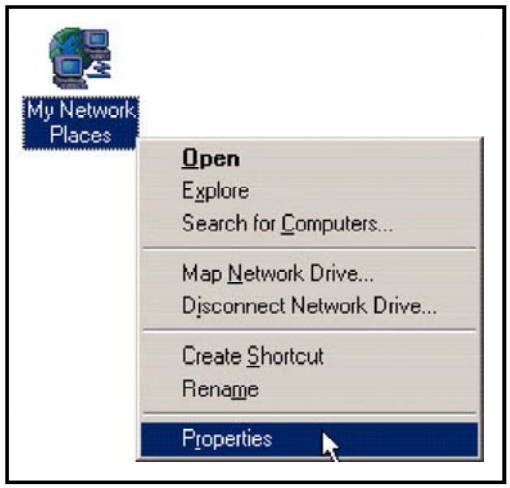

2. Right-click the network adapter used by the the SmartAnt SAA04-05224A, then select **Properties** from the pop-up menu. The **Local Area Connection Properties** window appears.

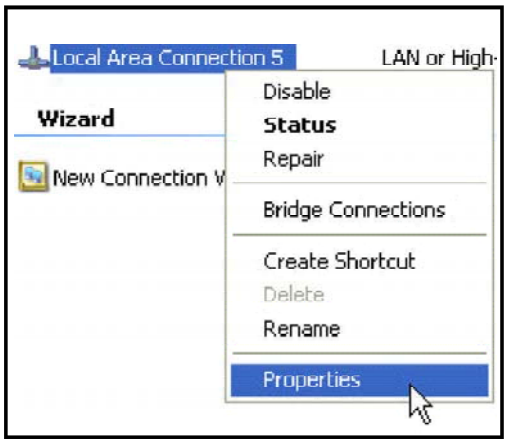

3. Double-click the **Internet Protocol (TCP/IP)** item to display the **Internet Protocol (TCP/IP) Properties** window.

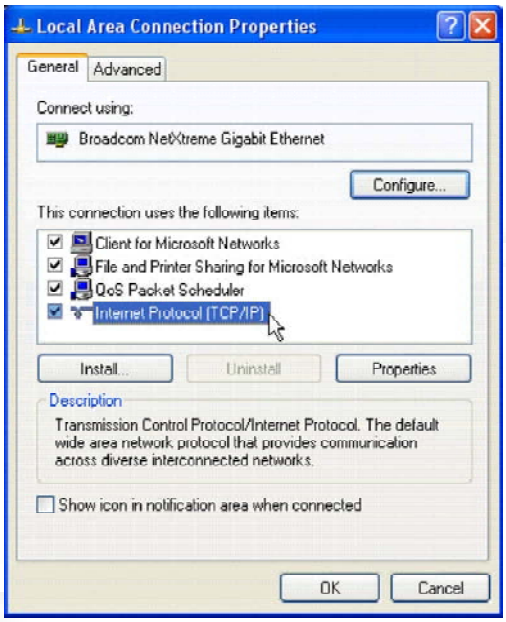

4. Check the **Use the following IP address** option, then enter the IP address for the network adapter. The **IP address** must be **192.168.1.X**. (**X** can be any number between 2 and 254 that is not used by another device.)

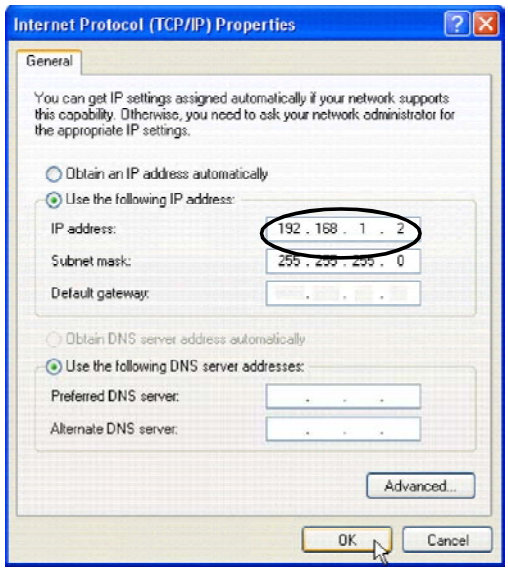

5. Set the **Subnet Mask** to 255.255.255.0. Click **OK** when finished.
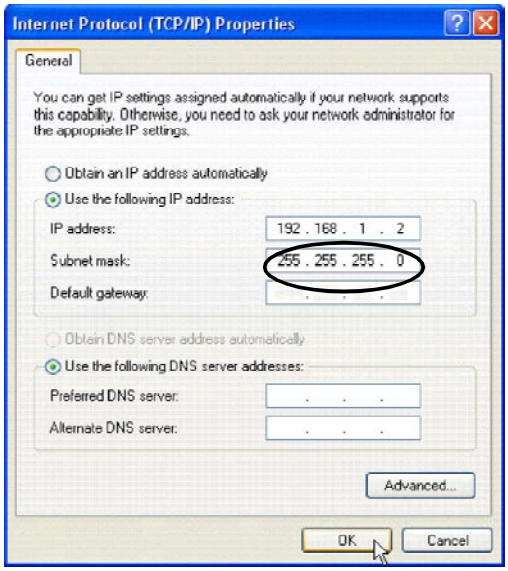
Changing the TCP/IP settings may require system restart. Switch on the SAA04-05224A immediately after rebooting.