User's Manual

XS770A
Wireless Vibration Sensor
Startup Guide

Sushi Sensor

IM 01W06E01-01EN

3rd Edition: Nov. 2019 (KP)
All Rights Reserved, Copyright © 2018, Yokogawa Electric Corporation

YOKOGAWA

IM 01W06E01-01EN
3rd Edition

YOKOGAWA

YOKOGAWA ELECTRIC CORPORATION
Headquarters
9-32, Nakacho, 2-chome, Musashino-shi, Tokyo, 180-8750 JAPAN
Phone : 81-422-52-5555
Branch Sales Offices
Osaka, Nagoya, Hiroshima, Kurashiki, Fukuoka, Kitakyusyu

YOKOGAWA EUROPE B. V.
Euroweg 2, 3825 HD Amersfoort, THE NETHERLANDS
Phone : 31-88-4641000 Fax : 31-88-4641111

YOKOGAWA ENGINEERING ASIA PTE. LTD.
5 Bedok South Road, Singapore 469270, SINGAPORE
Phone : 65-6241-9933 Fax : 65-6241-2606

YOKOGAWA CORPORATION OF AMERICA
Head Office
12530 West Airport Blvd, Sugar Land, Texas 77478, USA
Phone : 1-281-340-3800 Fax : 1-281-340-38382606

Nov. '19
Printed in Japan

1. Introduction

Thank you for purchasing the XS770A Wireless Vibration Sensor.
Your XS770A was precisely calibrated at the factory before shipment. To ensure both safety and efficiency, please read this manual and the following related documents carefully before you operate the instrument.

Document Name	Document No.
General Specification XS770A Wireless Vibration Sensor	GS 01W06E01-01EN
User's Manual XS770A Wireless Vibration Sensor Startup Guide	IM 01W06E01-01EN (This document)
User's Manual XS770A Wireless Vibration Sensor Functions	IM 01W06E01-11EN

This manual describes important information to enable appropriate and safe use, installation and maintenance of the XS770A. The XS770A functional explanation, settings, operation, and maintenance are described in the User's Manual "IM 01W06E01-11EN". Before beginning to operate this device, always read these documents to learn how to use this product correctly. The User's Manual (PDF file) can be downloaded from the website (http://www.sushisensor.com/).

■ Regarding This Manual

- This manual should be provided to the end user.
- This manual and the identification tag attached on the packing box are essential parts of the product; keep them in a safe place for future reference.
- The contents of this manual are subject to change without prior notice.
- All rights reserved. No part of this manual may be reproduced in any form without Yokogawa's written permission.
- Yokogawa makes no warranty of any kind with regard to this manual, including, but not limited to, implied warranty of merchantability and fitness for a particular purpose.
- If any question arises or errors are found, or if any information is missing from this manual, please inform the nearest Yokogawa sales office.
- The specifications covered by this manual are limited to those for the standard type under the specified model number break-down and do not cover custom-made instruments. When products whose suffix code or optional codes contain code "Z" and an exclusive document is attached, please read it along with this manual.
- Please note that changes in the specifications, construction, or component parts of the instrument may not immediately be reflected in this manual at the time of change, provided that postponement of revisions will not cause difficulty to the user from a functional or performance standpoint.

■ Safety, Protection, and Modification of this Product

- This product is designed to be used by a person with specialized knowledge.
- To protect the operator, product, and system controlled by the product, observe the safety precautions described in this manual. If users handle contrary to these instructions, we cannot guarantee safety.
- The Modification of the product is strictly prohibited.
- The following safety symbols are used in this manual:

WARNING

Indicates a potentially hazardous situation which, if not avoided, could result in death or serious injury.

CAUTION

Indicates a potentially hazardous situation which, if not avoided, may result in minor or moderate injury or physical damage. It may also be used to alert against unsafe practices.

IMPORTANT

Indicates that operating the hardware or software in this manner may damage it or lead to system failure.

NOTE

Draws attention to information essential for understanding the operation and features.

1.1 Safe Use of This Product

- Users of explosion protected instruments should refer first to "8. Explosion Protected Instrument".
- The use of this instrument is restricted to those who have received appropriate training for the device.
- Take care not to create sparks when accessing the instrument or peripheral devices in a hazardous location.
- Repair or modification to this instrument by customer will cause a malfunction of explosion protect function and hazardous situation. If you need to repair or modification, please contact the nearest Yokogawa office.

1.2 Radio Waves

This product is designated as a certification of construction type as a wireless facility for 800 MHz band and 900 MHz band low-power data communication system of the Radio Act. Refer to "7.2 Regulatory Compliance Statements" for detail.

- Area Code 2: Regional parameter is EU868 and frequency is 863 to 870MHz.
  Sweden and Greece do not allow full use of the 863 to 870 MHz band.
  Detail of the restrictions, refer to EC Decision 2006/771/EC (as amended).
- Area Code3: Regional parameter is US915 and frequency is 902 to 928MHz.
  Available frequency bands vary depending on the country.
- Area Code 4: Regional parameter is AS923 and frequency is 919 to 925 MHz .
  Available frequency bands vary depending on the country.

IMPORTANT

- Due to the designated certification of construction type, users may be subject to legal punishment in case of disassembling or modifying this product.
- Preventing interference with other wireless stations
  Industrial, scientific, and medical equipment, as well as local wireless stations (license required) and specific low power wireless stations (license not required) for identifying mobile objects used in factory production lines, use the same frequency band as this product.
- Check that local wireless stations and specific low-power wireless stations are not being used in the vicinity before using this product.
- If this product causes radio interference in a local wireless station, stop the emission of radio waves immediately. For details on how to prevent radio interference, contact our service office.

1.3 Warranty

- The warranty shall cover the period noted on the quotation presented to the purchaser at the time of purchase. Problems occurring during the warranty period shall basically be repaired free of charge.
- If any problems are experienced with this product, the customer should contact the Yokogawa representative from which this product was purchased or the nearest Yokogawa office.
- If a problem arises with this product, please inform us of the nature of the problem and the circumstances under which it developed, including the model specification and serial number. Any diagrams, data and other information you can include in your communication will also be helpful.
- The party responsible for the cost of fixing the problem shall be determined by Yokogawa following an investigation conducted by Yokogawa.

■ The purchaser shall bear the responsibility for repair costs, even during the warranty period, if the malfunction is due to:

- Improper and/or inadequate maintenance by the purchaser.
- Malfunction or damage due to a failure to handle, use, or store this product in accordance with the design specifications.
- Use of this product in question in a location not conforming to the standards specified by Yokogawa, or due to improper maintenance of the installation location.
- Failure or damage due to modification or repair by any party except Yokogawa or an approved representative of Yokogawa.
- Malfunction or damage from improper relocation of this product in question after delivery.
- Reason for force majeure such as fires, earthquakes, storms/floods, thunder/lightning, or other natural disasters, or disturbances, riots, warfare, or radioactive contamination.

1.4 Trademarks

In this document, trademarks or registered trademarks are not marked with "™" or "®". Product names and company names in this document are trademarks or registered trademarks of the respective companies.

2. Notes on Handling

The XS770A is fully factory-tested before shipment. When the XS770A is delivered, check the appearance for damage and that all the components mentioned below are included.
This section describes the precautions required to handle this product. Before use, read this section thoroughly. For information about other items, refer to the relevant sections.

■ Bundled Items

- XS770A main unit (with built-in battery)
- Hexagon socket set screw
- Conversion Screw (Area Code 3 only)
- User's Manual (IM 01W06E01-01EN)
- Default key label

2.1 Check the Model and Specifications

The model name and specifications are written on the nameplate attached to the housing. Verify that the specification indicated in the "Model and Suffix Code" in General Specifications "GS 01W06E01-01EN" complies with the specifications written on the order sheet.

F01.ai

Figure2.1 Example of Nameplate

2.2 Transport

To prevent damage while in transit ,leave the XS770A in the original shipping container until it reaches the installation site.

2.3 Storage

When an extended storage period is expected, observe the following precautions.

(1)Choose a storage location that satisfies the following requirements.
- A location that is not exposed to rain or water.
- A location subject to a minimum of vibration or impact.
- The following temperature and humidity range are recommended.
  - Temperature: -20 to 40°C (-20 to 85°C with the battery removed)
  - Humidity: 0 to 100% RH (non-condensation)

(2)If at all possible, store the transmitter in factory-shipped condition, that is, in the original shipping container.

NOTE

When storing this product over a long period, it is recommended to put the instrument in OFF Mode to conserve the battery. This product is shipped in OFF Mode from the factory. For details on how to switch to OFF Mode, refer to "IM 01W06E01-11EN".

2.4 Selecting the Installation Location

This product is designed to withstand severe environmental conditions. However, to ensure that it will provide years of stable and accurate performance, take the following precautions when selecting the installation location.

■ Wireless Communication

Ensure that there are no obstacles such as walls or pipes within a 30-cm radius of each antenna.

■ Ambient Temperature

Avoid locations subject to wide temperature variations or a significant temperature gradient. If the location is exposed to radiant heat from plant equipment, provide adequate thermal insulation and/or ventilation.

■ Ambient Atmosphere

Do not install the product in a location with a corrosive atmosphere. If this cannot be avoided, ensure there is adequate ventilation.

2.5 Restrictions on Use of Radio Transceivers

IMPORTANT

Although this product has been designed to resist high frequency electrical noise, if a radio transceiver is used near this product or its external wiring, this product may be affected by high frequency noise pickup. To test this, start from a distance of several meters and slowly approach this product with the transceiver while observing the measurement loop for noise effects. Thereafter use the transceiver outside the range where the noise effects were first observed.

3. Component Names

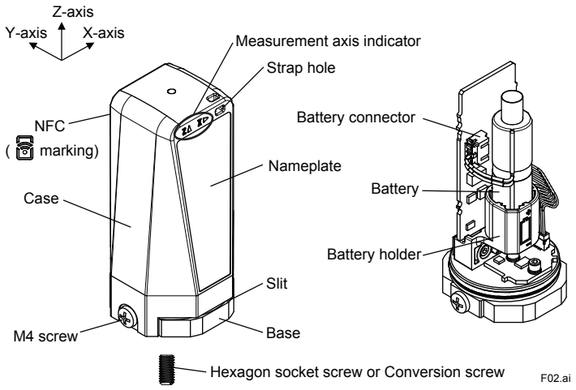

Figure3.1 Component Names

4. Installation

4.1 Precautions

- For information on the ambient conditions allowed at the installation location, refer to subsection 2.4 “Selecting the Installation Location”.
- Make sure that there are no damages,deformations, or stains adhering to the surface of the Base. Any deformations or stains may affect measurements.
- To align the X-axis or Y-axis to the desired orientation, make appropriate adjustments using the software after mounting. For details, refer to “IM 01W06E01-11EN”.

4.2 Installation Procedure

This product can be attached using two methods: direct mounting or using the magnetic holder (F9096DA) included as an accessory.
To install XS770A, follow the procedure below.

1. Determine the mounting position of this product. Find a plain surface with a diameter of 40 mm (1.57 inch) or more and a thickness of 6 mm (0.24 inch) or more.
2. Mounting this product.
   2a. Direct mounting
      2a.1 Follow the procedure below, make a vertical installation hole.
         - In case using the hexagon socket set screw, make a screw hole (more than 6 mm deep at M6 P-1) in the mounting position.
         - In case using the conversion screw, make a vertical screw hole (more than 0.24 inch deep at UNF1/4-28) in the mounting position.
      2a.2 Attach the screw (provided hexagon socket set screw or provided conversion screw) to the base. If using the conversion screw, screw the M6 side(with no notch) into the base.
      2a.3 Attach this product to the installation hole made on the measurement target, and tighten the screw using a tool such as a 46 mm wrench. (Recommended tightening torque: 5.1 N·m)
   2b. Using the magnetic holder
      2b.1 Attach the provided hexagon socket set screw to the Base.
      2b.2 Attach this product to the magnetic holder and tighten the screw using a tool such as a 46 mm wrench or strap wrench. (Recommended tightening torque: 5.1 N·m)
      2b.3 Attach this product to the installation surface. The magnetic holder has a strong magnetic force. When attaching, place the edge of the magnetic holder on the installation surface once, then carefully install the product without moving your hand.
3. Make sure that there is no loose space in the connection surface between this product and the measurement target, and that no abnormal vibration occurs.
4. Confirm safety and tie the strap hole of this product to a structural object nearby with a string as needed.

Removal is the reverse of the above.

CAUTION

- Tighten the screw and use the proper tools for all operations and ensure that the tool is applied to the Base (metallic part).
- Install XS770A with extremely careful not to injure your hand or finger.
- Note that, when installing XS770A using the magnetic holder, the vibration measurement frequency band drops.
- The magnetic holder can be mounted on ferrous material with a plain surface and no painting. When installing other conditions of the above, tie the strap hole of this product to a structural object nearby with a string*1 and take measures to prevent falling.
- In case the earthing of the Base (metallic part of the enclosure) is not ensured by installation, use the screw at the side of the Base for bonding the Base to the earth point or the equipotential bonding system.

*1: Use a wire with a load capacity (cutting load) of 2 kg or more.

5. Operation

To perform the setting and status check of the product, use an Android device with the NFC interface. Download Sushi Sensor App from Google Play.
Sushi Sensor App provides the following functions.

- Network setting
- Sensor setting
- Status check of communication, sensor, battery life, etc.
- Switch to OFF Mode

For details, refer to “IM 01W06E01-11EN”.
Check the firmware version of XS770A with Sushi Sensor App and update it to the latest firmware before use.

6. Maintenance

6.1 Replacing the Battery

■ Preparation

Only the dedicated battery specified by us should be used with this product.
When a replacement battery is needed, please order the XS70BT. The XS70BT is a set of a dedicated product (model: LS14500 C5SY) with a battery connector assembled to the SAFT battery.

CAUTION

Be sure to use a battery that is indicated as “Rev.1” for explosion protected instruments

■ Replacing the Battery

WARNING

- Do not open when an explosive atmosphere is present.
- Use only battery LS14500 C5SY (SAFT)
- Be sure to replace the battery in a safe location. Doing so in an explosive area could cause an explosion.

To replace a battery, follow the procedure described below.

IMPORTANT

- This product contains parts that can be damaged by static electricity. When replacing a battery, take precautions such as using a grounded wrist strap to avoid handling electronic parts or touching the board circuit patterns.
- When putting on or removing the Case, pay great attention to the environmental conditions to prevent dust and water droplets entering the product.
- When replacing the battery, check that the product has sufficiently cooled because the built-in battery or internal components may still be hot.
- Be extremely careful not to apply excessive force to the circuit board, hit it with a tool or allow any foreign materials or stains to adhere to it.
- Be extremely careful not to forcibly pull the cable in a way that may lead to damage or disconnection.
- Be extremely careful to ensure that no foreign materials get into or become adhered to the battery connector of the product when the battery is being removed.

1. Remove two M4 screws fixing the Case.
2. Remove the Case by inserting a flathead screwdriver into the slit.
3. Disconnect the battery connector from the board.
4. Remove the used battery from the battery holder.
5. Put a new battery into the battery holder with the negative side facing down.
6. Connect the battery connector to the board.
7. Put the case onto the base with directing the nameplate to the battery side.
8. Tighten the M4 screw to fix the case. (Recommended tightening torque: 1.37 N·m)
9. Initialize the battery life using Sushi Sensor App.

For details about how to initialize the battery life, refer to “IM 01W06E01-11EN”.

NOTE

If the battery and Case are not placed in the correct orientation, the Case will not be able to be closed.

6.2 Handling the Battery

This product uses one lithium thionyl chloride primary battery. A single battery contains approximately 0.7 grams of lithium. Under normal conditions, the battery materials are self-contained and are not reactive as long as the battery integrity is maintained. Care should be taken to prevent thermal, electrical or mechanical damage. Battery should be stored in a clean and dry area. For maximum battery life, storage temperature should not exceed 40°C.
Use the dedicated battery shown in “6.1 Replacing the battery”.

WARNING

Handling the battery
The following precautions must be observed to safely and effectively use a battery pack. Improper use may lead to fluid leakage, excessive heat, ignition, or explosion.

- Never charge it.
- Do not short-circuit it.
- Do not disassemble, transform, or modify it.
- Do not heat it or throw it in a fire.
- Do not soak it in fresh water or seawater.

CAUTION

Observe the following precautions for the safe disposal of battery.

- Do not incinerate the battery, and do not expose it to a high temperature of 100°C or more. This may lead to fluid leakage or explosion.
- Dispose of the battery according to lows and regulations.

Transportation of products containing a lithium battery:
This product contains a lithium battery. When transporting this product with the battery installed, set this product to OFF mode to prevent the battery from draining. For details about how to change to OFF mode, refer to “IM 01W06E01-11EN”. Transportation of primary lithium batteries is restricted by regulations issued by the U.S. Department of Transportation, the International Air Transport Association (IATA), the International Civil Aviation Organization (ICAO), and the European Ground Transportation of Dangerous Goods (ARD). It is the responsibility of the shipper to ensure compliance with these and any other local requirements. Consult current regulations and requirements before shipping.

How to replace and dispose of the battery:
This is an explanation about the EU Battery Directive. This directive is only valid in the EU.
The battery is included in this product.
When you remove the battery from this product and dispose of them,discard them in accordance with domestic law concerning disposal.
Take the right action on waste batteries,because the collection system in the EU on waste batteries are regulated.

Battery type: Primary lithium-thionyl chloride battery

Notice
The symbol (see above) means they shall be sorted out and collected as ordained in the EU Battery Directive.

How to remove battery safely:
Refer to subsection 6.1 “Replacing the Battery”.

7. General Specifications

7.1 Specifications

Please refer to “GS 01W06E01-01EN” for the latest information.

■ Wireless Specifications

Communication Protocol:
LoRaWAN class A, EU868, AS923, US915

Modulation
LoRa modulation

Data Rate:

- Area code 2,4: 250 to 11000 bps
- Area code 3: Transmitter: 980 to 12500 bps, Receiver: 980 to 21900 bps

Frequency:

- Area code 2: 863 to 870 MHz*
  *: This wireless frequency can be used throughout, Europe, although there are some restrictions in Sweden and Greece.
- Area Code 3: 902 to 928 MHz*
  *: Available frequency bands vary depending on the country.
- Area code 4: 919 to 925 MHz*
  *: Available frequency bands vary depending on the country.

Radio Security:
AES 128 bit encryption

RF Transmitter Power:
Max. 7 dBm

Antenna:
Built-in Omni-directional antenna

■ Power Supply Specifications

Battery:
Lithium thionyl chloride battery: 1 unit (dedicated product)
Rated voltage: 3.6 V
Rated capacity: 2.6 Ah

■ Performance Specifications

Item		Specification
Vibration	Measurement	Acceleration (peak), Velocity (RMS)
	Axis	X, Y, Z axes and 3-axis composite
	Range*1	Acceleration: 0 to 130 m/s^2 (0 to 13.26 g) Velocity*2: 0 to 20 mm/s (0 to 0.79 in/s)
	Frequency range	10 to 1,000 Hz (± 3 dB)
	Accuracy (100 Hz)	X, Y, Z axes : ±10% FS 3-axis composite: ±20% FS
Temperature	Measurement	Temperature
	Range	-20 to 85°C (-4 to 185°F)
	Resolution	0.1°C
	Measurement part	Base

*1: Peak value of the input vibration. For the relation between the measurement frequency band and measurable range, refer to the following figure.
*2: The 20 mm/s pk value is equivalent to 14 mm/s RMS when input is based on a sine wave.

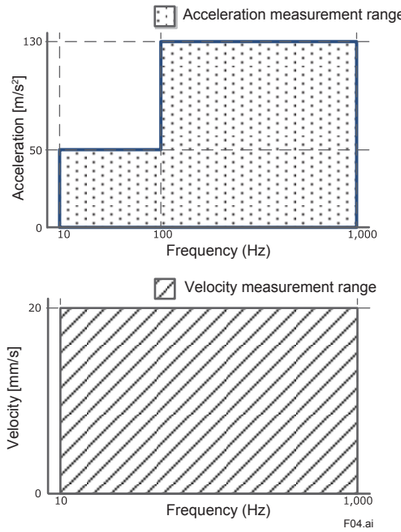

Figure: Measurable Range

Battery Characteristics:
The typical battery life is 4 years in the following conditions*.
- Update period: 1 hour
- Ambient temperature: 23±2°C

*: Environmental condition such as vibration and the type of connected device may affect the battery life.

Update Time:
1 minute to 3 days

■ Functional Specifications

Output:
LoRaWAN (EU868: EU, AS923: Southeast Asia, US915: North America)

NFC Interface:
NFC Forum Type 2 Tag

Diagnostic Function:
Battery alarm, internal temperature, wireless communication failures, sensor over-range, sensor failures, memory failures

Software Download Function:
Allows the user to update software of the sensor via the NFC interface

■ Installation Environment

Ambient Temperature Limits:
Operating: -20 to 85°C (altitude up to 3000 m)

Ambient Humidity Limits:
Operating: 0 to 100% RH (non-condensation)

Shock Resistance:
100 G

■ Physical Specifications

Housing Material:
For detail, refer to "MODEL AND SUFFIX CODES."

Weight:
260 g

Mounting:
Mounting on the measurement target using the screw*
(a hexagon socket head screw is included)

*: Can also mount using the magnetic holder supplied as an accessory. Note that, when using the magnetic holder, the vibration measurement frequency band

■ Software Specifications

This software is used to perform the setting and status check of this product via the NFC interface.

Operating Environment:

Item	Recommended System Requirements
OS	Android 5.1.1 or higher
CPU	Snapdragon 800 or equivalent or higher
Resolution	1280x720 dots or more
NFC	Reader, writer
GPS	Optional

Note of Available Android Device:
When using Sushi Sensor APP for ATEX intrinsically safe explosion devices, the Android device must comply with the following.
- When using an NFC link in a non-hazardous area, the maximum magnetic field strength generated by the Android device is 18 A/m (r.m.s.) or less (Compliant with ISO / IEC 14443).
- When using an NFC link in a hazardous area, only the Android device confirmed by Yokogawa Electric Corporation can be used.
- If additional information and approvals for Android devices are required, contact a Yokogawa representative.

■ Model and suffix codes

Model	Suffix Codes	Description
XS770A*1	.....	Wireless Vibration Sensor
---	**-A**.....	Always A
Area	**2**	EU
	3	North America*2
	4	Southeast Asia
Type	**00**	General Purpose
	K2.....	Intrinsically Safe for ATEX, II 3 G Ex ic IIB T4 Gc
---	**-A**.....	Always A
Housing material	**1**	Plastic (PBT), Stainless steel*3
	2	Plastic (PC), Stainless steel*4
Power source	**C**.....	Battery powered including battery
---	**A**.....	Always A

*1: A hexagon socket set screw is included.
*2: Conversion screw is included when area code is 3.
*3: Applicable when area code is 2 or 4.
*4: Applicable when area code is 3.

■ Optional Accessories

Item	Parts Number	Description
Magnetic holder	F9096DA	Magnet for mounting (M6 female screw)
Hexagon socket set screw	B1137BS	Screw for mounting (M6)
Conversion screw	F9096CM	Screw for mounting (M6 - 1/4 28UNF) *1

*1: Conversion screw is included when area code is 3.

Model	Suffix Codes	Description
XS70BT*1	.....	Lithium battery
Battery type	**-A**.....	Dedicated battery for XS770A
---	**A**.....	Always A
Number of Unit	**-C004**	4 units
	-C012	12 units

*1: The XS70BT is a set of a dedicated product (model: LS14500 C5SY) with battery connectors attached to SAFT battery

■ Dimensions

Main unit

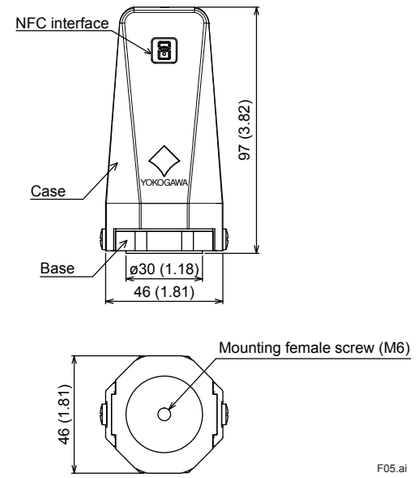

Magnetic Holder Parts No.: F9096DA

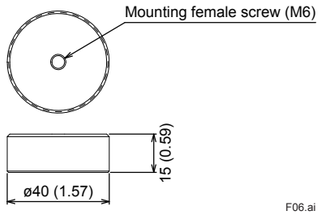

Hexagon socket set screw (M6) Parts No.: B1137BS

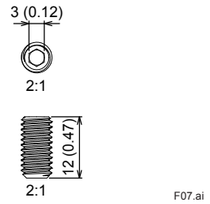

Conversion Screw (M6 - 1/4 28UNF) Parts No.: F9096CM

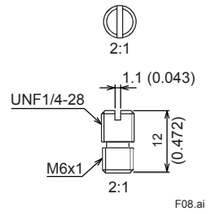

7.2 Regulatory Compliance Statements

This product satisfies the following standards.
* Please confirm that an installation region fulfills an applicable standard. If additional regulatory information and approvals are required, contact a Yokogawa representative.

Telecommunication Compliance:

■ RE Directive (EU Countries)

Hereby, Yokogawa Electric Corporation declares that the radio equipment type XS770A complies with Directive 2014/53/EU.
The full text of the EU declaration of conformity is attached to the product.

■ FCC compliance (United States)

FCC ID: SGJ-WFC016
FCC Approval
This device complies with part 15 of the FCC Rules. Operation is subject to the following two conditions: (1) This device may not cause harmful interference, and (2) this device must accept any interference received, including interference that may cause undesired operation.

Co-located:
This transmitter must not be co-located or operated in conjunction with any other antenna or transmitter.

FCC WARNING
Changes or modifications not expressly approved by the party responsible for compliance could void the user's authority to operate the equipment.

NOTE

This equipment has been tested and found to comply with the limits for a Class A digital device, pursuant to part 15 of the FCC Rules. These limits are designed to provide reasonable protection against harmful interference when the equipment is operated in a commercial environment.
This equipment generates, uses, and can radiate radio frequency energy and, if not installed and used in accordance with the instruction manual, may cause harmful interference to radio communications. Operation of this equipment in a residential area is likely to cause harmful interference in which case the user will be required to correct the interference at his own expense.

RF Exposure Compliance:
This equipment complies with FCC radiation exposure limits set forth for an uncontrolled environment and meets the FCC radio frequency (RF) Exposure Guidelines. This equipment should be installed and operated keeping the radiator at least 20 cm or more away from person's body.

■ ISED compliance (Canada)

IC: 8999A-WIC015
This device contains licence-exempt transmitter(s)/receiver(s) that comply with Innovation, Science and Economic Development Canada's licence-exempt RSS(s). Operation is subject to the following two conditions:
(1)This device may not cause interference.
(2)This device must accept any interference, including interference that may cause undesired operation of the device.

French:
L'émetteur/récepteur exempt de licence contenu dans le présent appareil est conforme aux CNR d'Innovation, Sciences et Développement économique Canada applicables aux appareils radio exempts de licence. L'exploitation est autorisée aux deux conditions suivantes :
(1)L'appareil ne doit pas produire de brouillage;
(2)L'appareil doit accepter tout brouillage radioélectrique subi, même si le brouillage est susceptible d'en compromettre le fonctionnement.

RF Exposure Compliance:
This equipment complies with ISED radiation exposure limits set forth for an uncontrolled environment and meets RSS-102 of the ISED radio frequency (RF) Exposure rules. This equipment should be installed and operated keeping the radiator at least 20 cm or more away from person's body.

French:
Cet équipement est conforme aux limites d'exposition aux rayonnements énoncées pour un environnement non contrôlé et respecte les règles d'exposition aux fréquences radioélectriques (RF) CNR-102 de l'ISDE. Cet équipement doit être installé et utilisé en gardant une distance de 20 cm ou plus entre le radiateur et le corps humain.

CE Conformity:

The Authorized Representative for this product in the EEA is:
Yokogawa Europe B.V. Euroweg 2, 3825 HD Amersfoort, THE NETHERLANDS.

RoHS Directive:
EN50581

RE Directive:
Safety: EN61010-1 (Indoor/Outdoor use), EN62479

(1) Pollution Degree 2
"Pollution degree" describes the degree to which a solid, liquid, or gas which deteriorates dielectric strength or surface resistivity is adhering. "2" applies to normal indoor atmosphere. Normally, only non-conductive pollution occurs. Occasionally, however, temporary conductivity caused by condensation must be expected.

(2) Installation Category I
"Overvoltage category (Installation category)" describes a number which defines a transient overvoltage condition. It implies the regulation for impulse with stand voltage. "I" applies to electrical equipment which is supplied from the circuit when appropriate transient overvoltage control means (interfaces) are provided.

EMC:
EN 301 489-1, EN 301 489-3, EN61326-1 Class A Table 2, EN61326-2-3, EN55011 Class A

CAUTION

This instrument is a Class A product, and it is designed for use in the industrial environment. Please use this instrument in the industrial environment only.

Radio Spectrum:
EN 300 220-2 (Band h1.3 in table 1 of CEPT ERC Rec. 70-03), EN 300 330

ATEX Directive: See 8.1.1 (1) "Technical Data".

Canadian Safety Standards:

CAN/CSA-C22.2 No.61010-1
CAN/CSA-C22. No.94.2
IEC 60529
Pollution degree 2
Overvoltage category I

WARNING / AVERTISSEMENT

Use only battery LS14500 C5SY (SAFT)
Utiliser uniquement des accumulateur LS14500 C5SY (SAFT)

Degrees of Protection:

- Housing material code 1: IP66/IP67
- Housing material code 2: IP66/67 and Type4X

■ Waste Electrical and Electronic Equipment (WEEE), Directive

(This directive is valid in the EU member states.)
This product complies with the WEEE Directive marking requirement.
The following marking indicates that you must not discard this electrical/electronic product in domestic household waste.
Product Category
With reference to the equipment types in the WEEE directive, this product is classified as "Small equipment".
Do not dispose of this product in domestic household waste.
When disposing of products in the EU, contact your local Yokogawa Europe B. V. office.

8. Explosion Protected Instrument

8.1 ATEX Conformity

(1)Technical Data

Caution for ATEX Intrinsically safe type.

Note 1. Model XS770A Wireless Vibration Sensor with Type K2 for potentially explosive atmospheres:

- Applicable Standards: EN 60079-0: 2012+A11: 2013
  EN 60079-11: 2012
- Ex Marking: Ⓔx II 3 G Ex ic IIB T4 Gc
- Ambient temperature: –20°C to 80°C (–4 to 176°F)
- Enclosure: IP66/IP67 in accordance with EN 60529
- NFC Link: Magnetic field strength ≤ 8.5 [A/m (peak)] (at the NFC antenna)

Note 2. Installation

- The equipment must be installed in accordance with EN 60079-14.
- Installation should be in accordance with local installation requirements.
- Control Drawing (ATEX)

Figure8.1 Control Drawing, for ATEX Declaration

(2)Operation

WARNING

When using Sushi Sensor APP for ATEX intrinsically safe explosion devices, the Android device must comply with the following.

- When using the NFC link in a non-hazardous area, the maximum magnetic field strength generated by the Android device is 18 [A/m (r.m.s.)] or less (Compliant with ISO / IEC 14443).
- When using NFC link in a hazardous area, only Android devices confirmed by Yokogawa Electric Corporation can be used.
- If additional information and approvals for Android device are required, contact a Yokogawa representative.

(3)Maintenance and Repair

WARNING

A modification of the equipment would no longer comply with the construction described in the EU Declaration of Conformity.
Only personnel authorized by Yokogawa Electric Corporation can repair the equipment.

(4)Nameplate

Please refer to "Figure 2.1 Example of Nameplate"
MODEL: Specified model code.
SUFFIX: Specified suffix code.
S/N : Serial number.
EUI64 : EUI64 address.
TOKYO 180-8750 JAPAN: The manufacturer name and the address*1.
*1:"180-8750" is a zip code which represents the address: 2-9-32 Nakacho, Musashino-shi, Tokyo, Japan.

Revision Information

Title: XS770A Wireless Vibration Sensor Startup Guide

Manual No.: IM 01W06E01-01EN

Edition	Date	Page	Revised Item
1st	Feb. 2019	—	New publication
2nd	June 2019	1 2	1.2 Add Southeast Asia area 3 Revise Y-axis direction 5 Add confirmation of firmware version
3rd	Nov. 2019	1 2 3	1.2 Add North America 2 Add Conversion screw in bundled Items Delete safe symbol marks