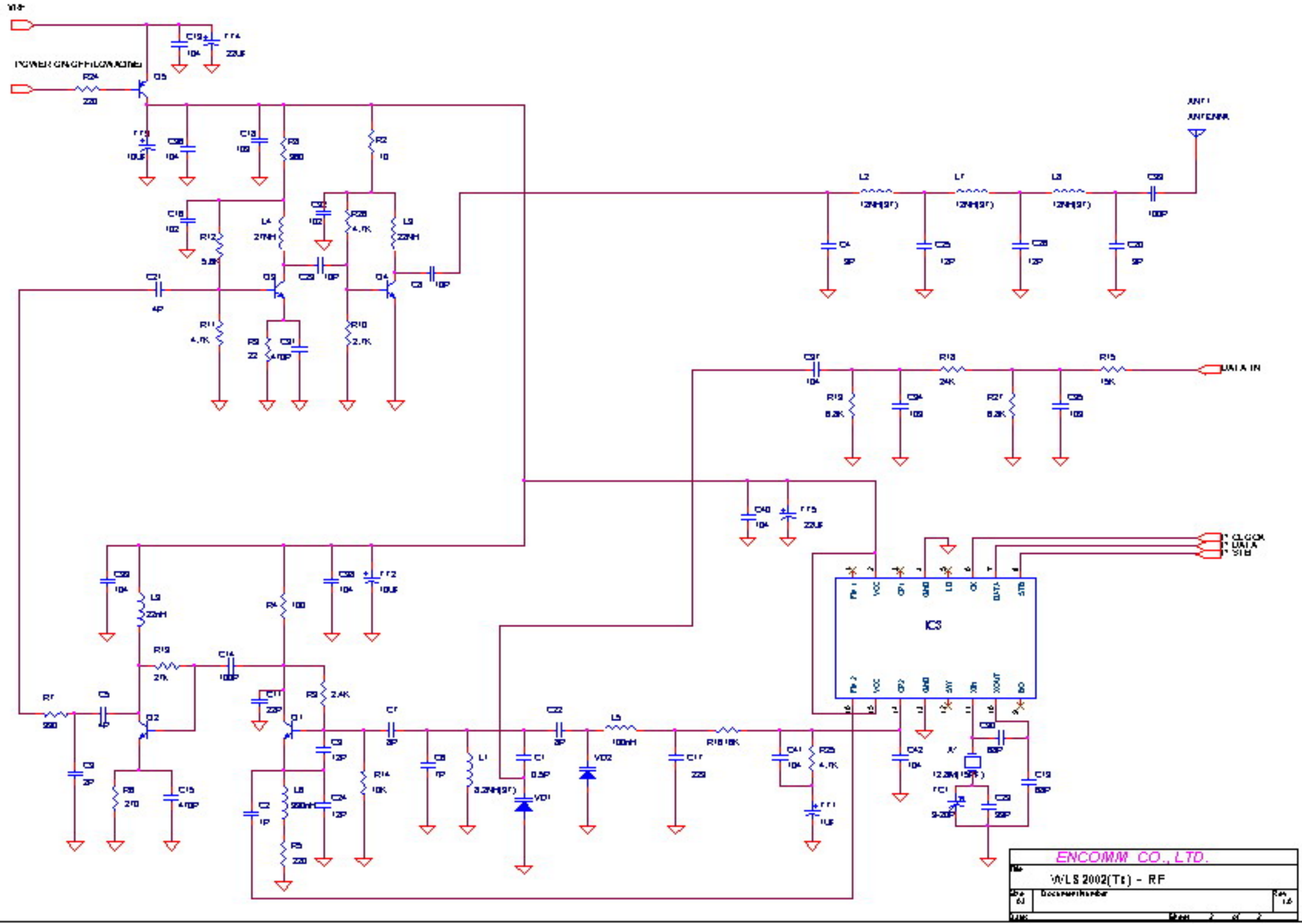
ENCOMM CO., LTD.
WLS 2002(Tx) - RF
IC3
ANTENNA
DATA IN
CLOCK
DATA
STB

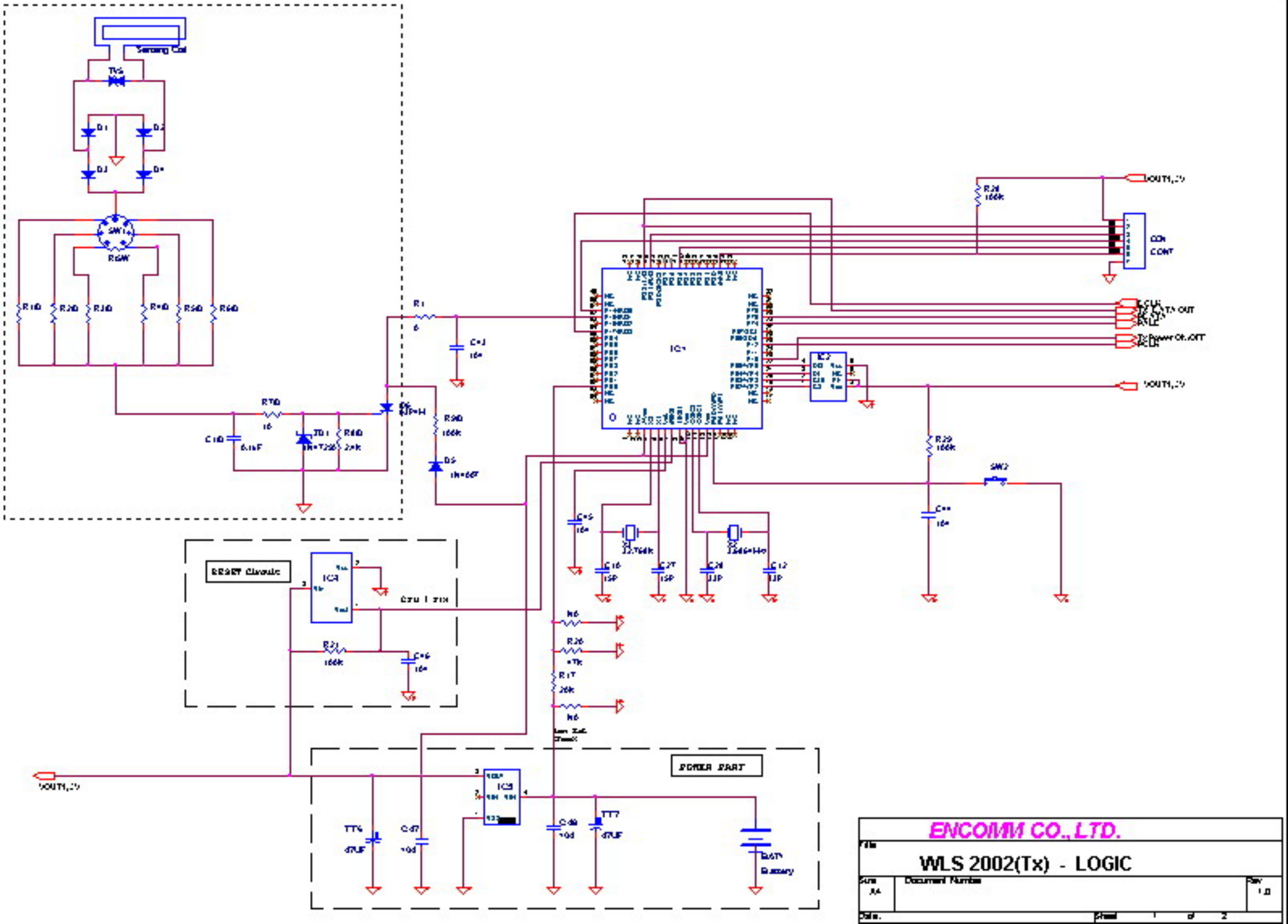
Sensing Coil
RESET Circuit
POWER PART
CON
CONT
ENCOMM CO., LTD.
WLS 2002(Tx) - LOGIC
Document Number
Sheet 1 of 2