IPTV 7000™

Coaxsys IPTV 7000 Master & Adapter

INSTALLATION GUIDE

Coaxsys, Inc.
718 University Avenue, suite 202
Los Gatos, CA 95032
1-877-878-0036
www.Coaxsys.com

© Coaxsys, Inc. 2004. All rights reserved.

Install the IPTV 7000 Master or Adapter

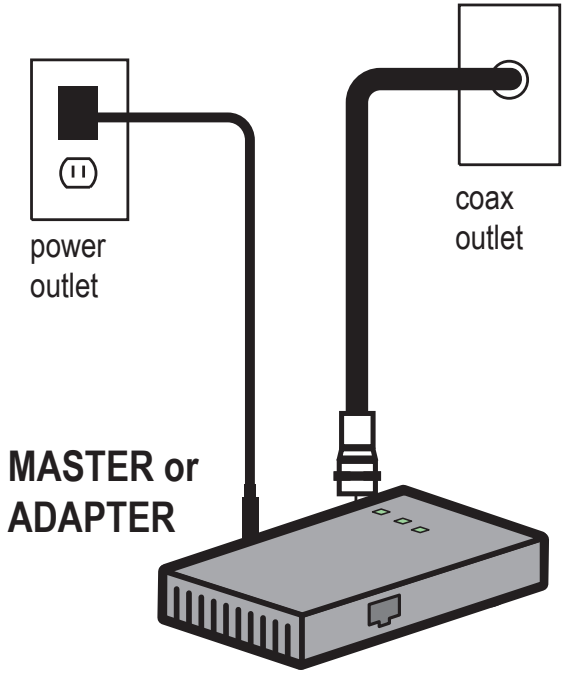

NOTE: For the best throughput and latency, the Master should be installed in the same room as your broadband access.

1. Using the included power supply, connect a Coaxsys Master (dark grey) or Adapter (light grey) to a power outlet. The Power link light should illuminate.

2. Using the included coax cable, connect a coaxial cable to the Coaxsys Master or Adapter and a wall outlet; the Coax link light should illuminate.

Technical Specifications - Network Adapter or Master

Speed
40Mbps

Connectors
Coax (RG6) In, Coax (RG6) Out
Ethernet (RJ45), Power

LEDs
Power
Ethernet (RJ45) Link
Coax (RG6) Link

Standards
10/100 Ethernet (802.3)

Peer-to-Peer Communications

Latency
< 1 msec

Bit Error Rate
$< 1 \times 10^9$

Field Upgradable via Ethernet

Dimensions
6.3" x 5.4" x 1.1"
161mm x 138mm x 30mm

Weight
.46 lbs (0.21 kg)

Power Adapter
5VDC 750mA

Maximum Distance
400 feet typical inclusive of splitters with either RG-59 or RG-6 cable

Operating Temperature
32F to 122F (0C to 50C)

Storage Temperature
-4F to 176F (-20C to 80C)

Regulatory Compliance
FCC Part 15, ICAN Class B

Install Notes

- The Master is dark grey. Only one Master is allowed on a single network.
- The Adapters are light grey.
- Regular cable or on air TV services will not work with the IPTV 7000. However, satellite TV is compatible with the IPTV 7000 network
- Coaxsys products will work with any coaxial topology, but the use of ampli ers should be avoided.
- For the best throughput and latency, the Master should be installed in the same room as your broadband access.
- Ethernet for the Adapter and Master only works in 10 Mb and 100 Mb full duplex mode.

Connecting to a Set Top Box

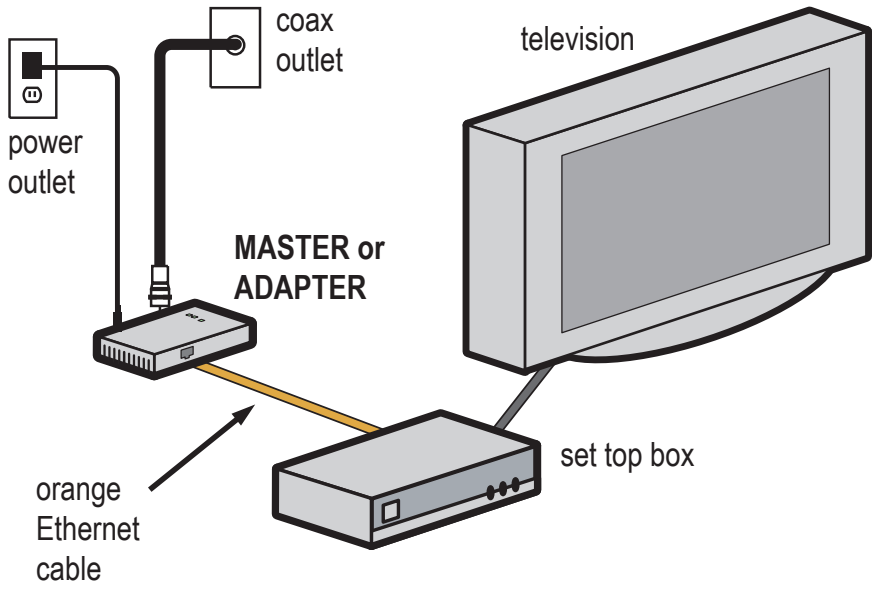

1. Once the Master or Adapter has been installed, connect one end of the **orange Ethernet cable** to the Adapter or Master and the other end to the Set Top Box; the Ethernet link light should illuminate. See the manufacuturers instructions for connecting televisions, DVRs, game consoles, etc.

Connecting to an Ethernet Switch/Router

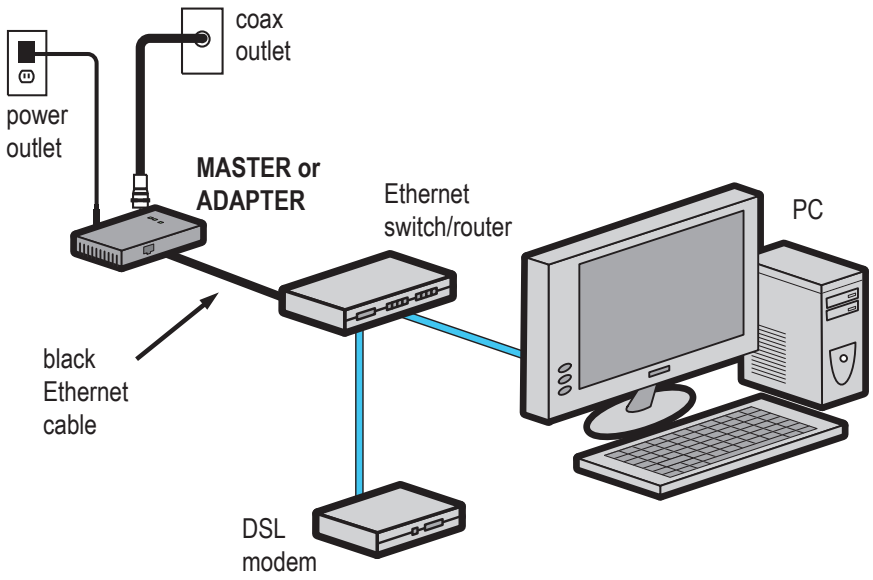

An Ethernet switch/router may be used to increase the number of digital devices connected to the Master or Adapter.

1. Connect one end of the **black Ethernet cable** to the Master or Adapter and the other end to the switch/router. The Ethernet link light should illuminate. See the manufacuturers instructions for connecting PCs, modems, etc.

Sample Usage Diagram

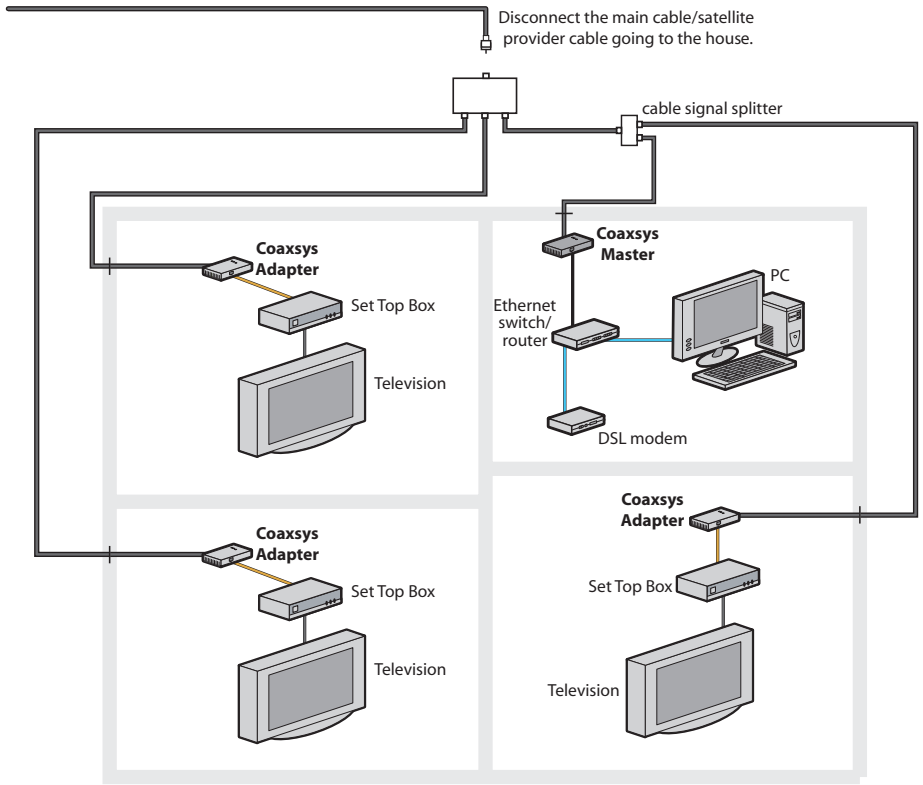

Install Notes

- The Master is dark grey. Only one Master is allowed on a single network.
- The Adapters are light grey.
- Regular cable or on air TV services will not work with the IPTV 7000. However, satellite TV is compatible with the IPTV 7000 network.
- Coaxsys products will work with any coaxial topology, but the use of ampli ers should be avoided.
- For the best throughput and latency, the Master should be installed in the same room as your broadband access.
- Ethernet for the Adapter and Master only works in 10 Mb and 100 Mb full duplex mode.

CAUTION
Use a shielded data cable connection between the parallel or serial data ports and peripherals of this equipment.

CAUTION
Other connections between peripherals of this equipment may be made with low voltage non-shielded computer data cables.

CAUTION
Network connections between the computer and the EUT consist of shielded CAT 5 cable.

WARNING
Use only the Coaxsys, Inc., specified wall adapter for this product. This Coaxsys, Inc. wall adapter enhances the system performance and increases the product safety features.

WARNING
The phrase "contains PULVER ™ Shield" on the Product Certification Label means Coaxsys, Inc. has elected to install this state-of-the-art technology dedicated to significantly reducing Electromagnetic Radiation and Interference. The PULVER ™ Shield protects this equipment and operators of this equipment from Electromagnetic Radiation beyond requirements of presently recognized product standards.

For continued protection against Electromagnetic Radiation, replace only with same model and version of PULVER™ Shield: 12 dB µV/m maximum attenuation from 30 to 1000 MHz.

FCC NOTICE
INFORMATION FOR THE USER

This equipment has been tested and found to comply with the limits for a Class B digital device, pursuant to Part 15 of the FCC Rules. These limits are designed to provide reasonable protection against harmful interference in a residential installation. This equipment generates, uses and can radiate radio frequency energy and, if not installed and used in accordance with the instructions, may cause harmful interference to radio communications. However, there is no guarantee that interference will not occur in a particular installation. If this equipment does cause harmful interference to radio or television reception, which can be determined by turning the equipment off and on, the user is encouraged to try to correct the interference by one or more of the following measures:

1) Reorient or relocate the receiving antenna.
2) Increase the separation between the equipment and receiver.
3) Connect the equipment into an outlet on a circuit different from that to which the receiver is connected.
4) Consult the dealer or an experienced radio/TV technician for help.

The user may find the following publication prepared by the Federal Communications Commission helpful:

"How to Identify and Resolve Radio-TV Interference Problems" (Stock Number 004-000-00345-4).

Available exclusively from the Superintendent of Documents, Government Printing Office, Washington, DC 20402 (telephone 202-512-1800).

FCC WARNING

Changes or modifications not expressly approved by the party responsible for compliance to Part 15 of the FCC Rules could void the user's authority to operate the equipment.

ICAN Class B Digital Equipment

This Class B digital apparatus meets all requirements of the Canadian Interference-Causing Equipment Regulations.

Cet appareil numérique de la classe B respecte toutes les exigences due Réglement sur le matériel brouilleur du Canada.