NBB Controls + Components GmbH

Flexibly designed complete solutions

Radio Control Systems – Cable Control Systems – Infrared Control Systems

Operating instructions

USA/Canada

Pocket*Evo*

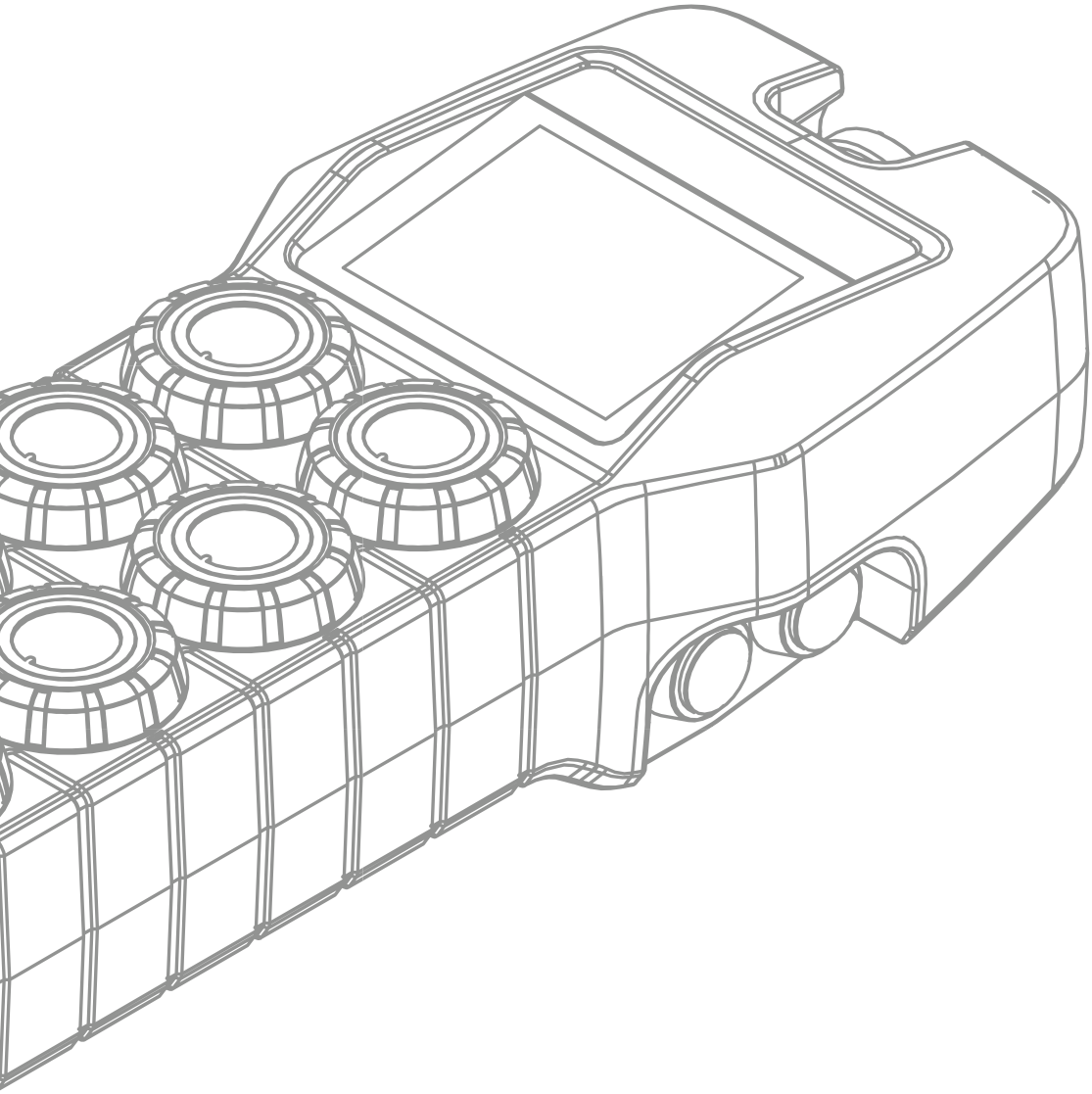

Transmitter

Receiver

Contents

General information 4
Transmitter Pocket*Evo*® 6

General information

Standard scope of delivery

- Transmitter including carrying system
- Receiver with integrated mounting holes
- Integrated connection cable or adapter cable for receiver

The order confirmation and/or delivery note is binding for the actual scope of delivery.

Safety information

Even if you have already operated radio control systems, always read these operating instructions before commissioning. Only these operating instructions include the latest information about your NBB radio control system.

Please refer to the enclosed documents for explanations about the operating license. Always observe the relevant work safety and accident prevention regulations. Only trained and authorized persons may operate the NBB radio control system. The safety features installed in the NBB radio control system must be checked regularly.

The NBB radio control system must be shut down immediately in case of failures. The transmitter must be switched off using the EMERGENCY STOP switch or STOP button. The connection cable at the receiver must be disconnected from the connection (terminal) of the controlled system. The radio control system may only be repaired by NBB or specialists authorized by NBB.

Disregarding these recommendations puts you and others in danger!
NBB refuses any warranty and liability in such cases. The radio control system is used to control machines and transmit data. In explosive atmospheres or for the control of machines for the transport of persons it may not be used, unless specifically authorized by the manufacturer for this application. Any different use is prohibited and releases NBB from any responsibility.

Never expose the radio control system to strong jet high pressure cleaning equipment!

Nameplates

The nameplates specify transmitter and receiver type, serial number, frequency range and approval for non-EU countries. Please always advise serial number for queries.
Example:

Transmitter Type / Version:	**Pocket*Evo***
Factory No.:	999 899 4990
Frequency:	902 – 928 MHz

Maintenance

The NBB radio control system is maintenance-free. Nevertheless observe the following points:
- Check EMERGENCY STOP and STOP function regularly.
- Remove residues of building material.
- Disconnect receiver from power supply before welding work, to avoid the risk of damage to the receiver electronics.
- Check regularly for worn parts.

Warranty

NBB grants a functional warranty of 12 months from the date of sale on all NBB radio control systems (transmitter, receiver, charger). Working hours and material costs are included in the warranty. Shipping costs shall be at the expense of the buyer. Worn parts, relays, rechargeable batteries and batteries are excluded from the warranty.

The functional warranty does not cover damage, accidental damage, negligence, improper use, non-compliance of the operating conditions, non-observance of the operating, test and service information as well as for repairs or device modifications that are not authorized by NBB.

NBB is not liable for indirect damage and reserves the right to decide on improvements or replacements.

In the event of faults

Stop work immediately if a fault event occurs with the NBB radio control system!

Please note that even small faults can lead to extensive defects. Always contact your dealer or NBB in the event of a fault. Do not attempt to repair the NBB radio system.

US-FCC and CANADA IC

FCC notes

Part 15.105 Statement

NOTE: This equipment has been tested and found to comply with the limits for a Class A digital device, pursuant to Part 15 of the FCC Rules. These limits are designed to provide reasonable protection against harmful interference when the equipment is operated in a commercial environment. This equipment generates, uses, and can radiate radio frequency energy and, if not installed and used in accordance with the instruction manual, may cause harmful interference to radio communications. Operation of this equipment in a residential area is likely to cause harmful interference in which case the user will be required to correct the interference at his own expense.

Part 15.21 Statement

Changes or modifications made to this equipment not expressly approved by NBB Controls + Components GmbH may void the FCC authorization to operate this equipment.

IC notes

The installer of this radio equipment must ensure that the antenna is located or pointed such that it does not emit RF field in excess of Health Canada limits for the general population; consult Safety Code 6, obtainable from Health Canada's website www.hcsc.gc.ca/rpb

RSS-GEN

This device complies with Part 15 of the FCC Rules and with Industry Canada licence-exempt RSS standard(s). Operation is subject to the following two conditions:

(1) this device may not cause harmful interference, and

(2) this device must accept any interference received, including interference that may cause undesired operation.

Le présent appareil est conforme aux CNR d'Industrie Canada applicables aux appareils radio exempts de licence. L'exploitation est autorisée aux deux conditions suivantes:

(1) l'appareil ne doit pas produire de brouillage, et

(2) l'appareil doit accepter tout brouillage radioélectrique subi, même si le brouillage est susceptible d'en compromettre le fonctionnement.

Transmitter Pocket*Evo*®

Variations

Pocket*Evo*® minor

Pocket*Evo*® media

Pocket*Evo*® magna

Pocket*Evo*® minor-LCD

Pocket*Evo*® media-LCD

Pocket*Evo*® magna-LCD

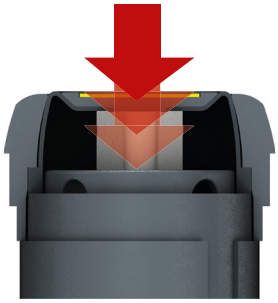

Type of Push button
Proportional (optional 1-, 2- or 3-steps)

Commissioning

> Operating voltage 2.4 V / 3,0 V

Loosen the retaining screw of the battery compartment on the back site of the transmitter and remove the cover. Insert 2 fully charged AA 1.2 V NiMH batteries (or 1.5 V batteries) in the battery compartment, close cover and tighten retaining screw.

Charge the rechargeable battery completely before initial use.

If the NBB radio control system won't be used for a long period of time, it is strongly recommended remove the battery from transmitter and charge the battery approx. every 4 weeks. This prevents deep discharge of the battery and enhances its service life.

Please refer to the technical documents for the exact design.

Safety equipment

> Safety equipment in the NBB radio control system

- EMERGENCY STOP or STOP function
- Zero position interlock

Please check the sleeves and the housing for breaks and cracks each time before commissioning the transmitter. Contact your service team if necessary. Non-observance can cause malfunctions and water damage.

Transmitter Pocket*Evo*®

Operation of the system

Operation: Two red dots flash alternately.

> Switching the transmitter on and off

CDC-key (Customer Data Collection)

- The transmitter can only be started with the CDC-key inserted.
- If the CDC-key is not present, the display changesbetween **“no”** and **“tA”**.
- CDC-key contains customer-specific parameters.

Design with emergency stop

- Unlock the emergency stop pushbutton by turning clockwise to switch on the transmitter.
- The transmitter vibrates shortly.
- In operation two red dots flash alternately in the display.
- Switch off the transmitter by pressing the emergency stop pushbutton once.

After pressing the emergency stop pushbutton, the transmitter sends stop telegrams for 2 seconds to switch off the system. This shut-off time is displayed on the LED display by the external segments rotating clockwise.

To ensure faultless free operation, please observe the following rules:
The system to be controlled – provided the transmitter is ready for operation – can only be switched on if no command is activated. To start the system to be controlled and to activate the functions press the **“On/Horn”** button, which also triggers a horn signal. Due to work specifications, the same button is used for triggering repeated horn signals.

> Frequency change

To change the frequency, press and hold the left side button **“On/Horn”**. Press now the right side button **“frequency change”**. If the receiver locks on a new frequency, a horn signal is triggered and the system is ready for operation. Please observe the country-specific regulations.

> Channel number

During operation the set channel can be displayed by pressing the **“Frequency switching”** key. For transmitters without an LED display, the information is displayed in the monochrome.

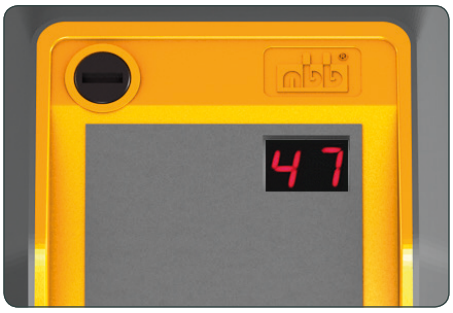

Please refer to the technical documents for the exact position of the **“On/Horn”** and **“Frequency switching”** buttons.

> Battery life warnings

The quick blinking of the letters **“Lo”** in the display shows the end of the battery capacity. From this time the operation of the transmitter is approx. 15 minutes possible, depending on battery type or batterypack. During this time, bring the unit into a safe position, switch off the transmitter and replace the batteries with charged batteries. For transmitters without an LED display, the information is displayed in the monochrome.

> Energy saving function

If no buttons are pressed within a specified time*, the transmitter switches off automatically. The display turns off. A transmitter can also be manufactured without a standby function for continuous operation as an option.

**The standby time can be set as desired.*

SMP-Technologie – Surface Mounted Push buttons

> Changing the Surface Mounted Push buttons

- Switch off the transmitter and remove the battery.
- Unscrew the threaded sleeve with the supplied special key and pull it outwards.
- Remove the SMP-button from the top. Insert the new SMP-button.
- Place the threaded sleeve over the SMP push button again and screw it tight.

Start teach mode after changing the SMP-buttons (see below).

> Surface Mounted Push buttons teach mode activation with pushbutton

To activate teach mode, the transmitter must be switched off.

1. Press and hold the **“Frequency switching”** key.
2. Switch the transmitter on.
3. The letters **“tt”** appear in the monochrome after 2 seconds.
4. Release the **“Frequency switching”** key.
5. Push the button all the way down as quickly as possible. If the corresponding push button number appears in the display, the push button can be released again. Repeat step 5 for all other SMP push buttons. It is not necessary to reactivate the teachmode.
6. Teachmode ends automatically when all SMP push buttons are activated. The transmitter vibrates shortly.
7. Attention! The transmitter is now in working mode!

If **“tt”** does not appear in the display, please switch off the transmitter and start teach mode activation from the beginning!

> Surface Mounted Push buttons teach mode activation with pushbutton and display

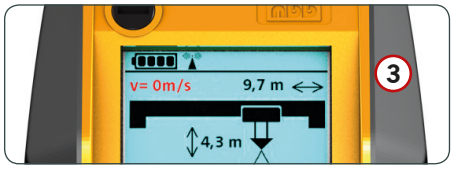

To activate teach mode, the transmitter must be switched off.

1. Press and hold the **"Frequency switching"** key.
2. Switch the transmitter on.
3. The letters **"tt"** appear in the monochrome after 2 seconds.
4. Release the **"Frequency switching"** key.
5. Push the button all the way down as quickly as possible. If the corresponding push button number appears in the display, the push button can be released again. Repeat step 5 for all other SMP push buttons. It is not necessary to reactivate the teachmode.
6. Teachmode ends automatically when all SMP push buttons are activated. The transmitter vibrates shortly.
7. Attention! The transmitter is now in working mode!

If **"tt"** does not appear in the display, please switch off the transmitter and start teach mode activation from the beginning!

Push buttons to enter and store min and max values for valves could differ from the description above. In this case a separate supplemental information sheet will be attached to the operating instructions.

Technical data

Transmitter	Pocket*Evo*®
Transmission frequency range	See nameplate
Data security	Addressing each transmitter using a unique Binary bit code combination
Data repetition rate	Approx. 15 ms/60 ms
LF-modulation	GFSK
Baud rate	9.600 Baud (Bit/sec.)
Range	Up to 100 m (depending on environment)
Operating voltage	2,4 V – 2 x AA 1.2 V NiMH batteries 3,0 V – 2 x 1,5 V batteries
Current consumption	< 100 mA bei 3 V
RF output	< 750 µW
Protection class	IP 65
Operating ambient temperature	– 20 to + 70 °C
Weight (without battery)	PocketEvo® minor / PocketEvo® minor-LCD: approx. 600 g PocketEvo® media / PocketEvo® media-LCD: approx. 660 g PocketEvo® magna / PocketEvo® magna-LCD: approx. 730 g
Masse (L x B x H)	PocketEvo® minor / PocketEvo® minor-LCD: 257 x 93 x 60 mm PocketEvo® media / PocketEvo® media-LCD: 285 x 93 x 60 mm PocketEvo® magna / PocketEvo® magna-LCD: 321 x 93 x 60 mm

Meaning error identification

	LED Figure	Reason	Solution
Error 0	“Er” and “00”	No Calibration in Transmitter	calibrate Transmitter
Error 1	“Er” and “01”	Button 1 not present / exchanged / defect / pressed by Power on	Install Button / teach Transmitter / get new Button / free Button by Power on
Error 2	“Er” and “02”	Button 2 not present / exchanged / defect / pressed by Power on	Install Button / teach Transmitter / get new Button / free Button by Power on
Error 3	“Er” and “03”	Button 3 not present / exchanged / defect / pressed by Power on	Install Button / teach Transmitter / get new Button / free Button by Power on
Error 4	“Er” and “04”	Button 4 not present / exchanged / defect / pressed by Power on	Install Button / teach Transmitter / get new Button / free Button by Power on
Error 5	“Er” and “05”	Button 5 not present / exchanged / defect / pressed by Power on	Install Button / teach Transmitter / get new Button / free Button by Power on
Error 6	“Er” and “06”	Button 6 not present / exchanged / defect / pressed by Power on	Install Button / teach Transmitter / get new Button / free Button by Power on
Error 7	“Er” and “07”	Button 7 not present / exchanged / defect / pressed by Power on	Install Button / teach Transmitter / get new Button / free Button by Power on
Error 8	“Er” and “08”	Button 8 not present / exchanged / defect / pressed by Power on	Install Button / teach Transmitter / get new Button / free Button by Power on
Error 9	“Er” and “09”	Button 9 not present / exchanged / defect / pressed by Power on	Install Button / teach Transmitter / get new Button / free Button by Power on
Error 10	“Er” and “10”	Button 10 not present / exchanged / defect / pressed by Power on	Install Button / teach Transmitter / get new Button / free Button by Power on
Error 11	“Er” and “11”	magnetic field in Eviroment too strong	turn off Transmitter
Error RFID	“no” and “tA”	no CDC-Key	ask CDC-Key from NBB
Error Config.	“no” and “CF”	No Configurations in CDC-Key	ask Configurations from NBB
Error Battery	“Er” and “bt”	Battery empty	change Battery

Meaning warning identification

	LED Figure	Reason	Solution
Warning 1	“01” flash	Button 1 is near failure status	contact NBB Service
Warning 2	“02” flash	Button 2 is near failure status	contact NBB Service
Warning 3	“03” flash	Button 3 is near failure status	contact NBB Service
Warning 4	“04” flash	Button 4 is near failure status	contact NBB Service
Warning 5	“05” flash	Button 5 is near failure status	contact NBB Service
Warning 6	“06” flash	Button 6 is near failure status	contact NBB Service
Warning 7	“07” flash	Button 7 is near failure status	contact NBB Service
Warning 8	“08” flash	Button 8 is near failure status	contact NBB Service
Warning 9	“09” flash	Button 9 is near failure status	contact NBB Service
Warning 10	“10” flash	Button 10 is near failure status	contact NBB Service
Battery Warning	“Lo”	low Charge in Battery	change Battery

NBB Controls, Inc.
5909 School Avenue
Henrico, Virginia (VA) 23228
Phone: 800 706-4489 (only USA)
Phone: +1 804 262-4846
Fax: +1 804 262-0596
sales@nbbcontrols.com
www.nbbcontrols.com

Headquarter
NBB Controls + Components GmbH
Otto-Hahn-Straße 3 – 5
75248 Ölbronn-Dürrn
GERMANY
Fon: +49 7237 999-0
Fax: +49 7237 999-199
sales@nbb.de
www.nbbcontrols.de

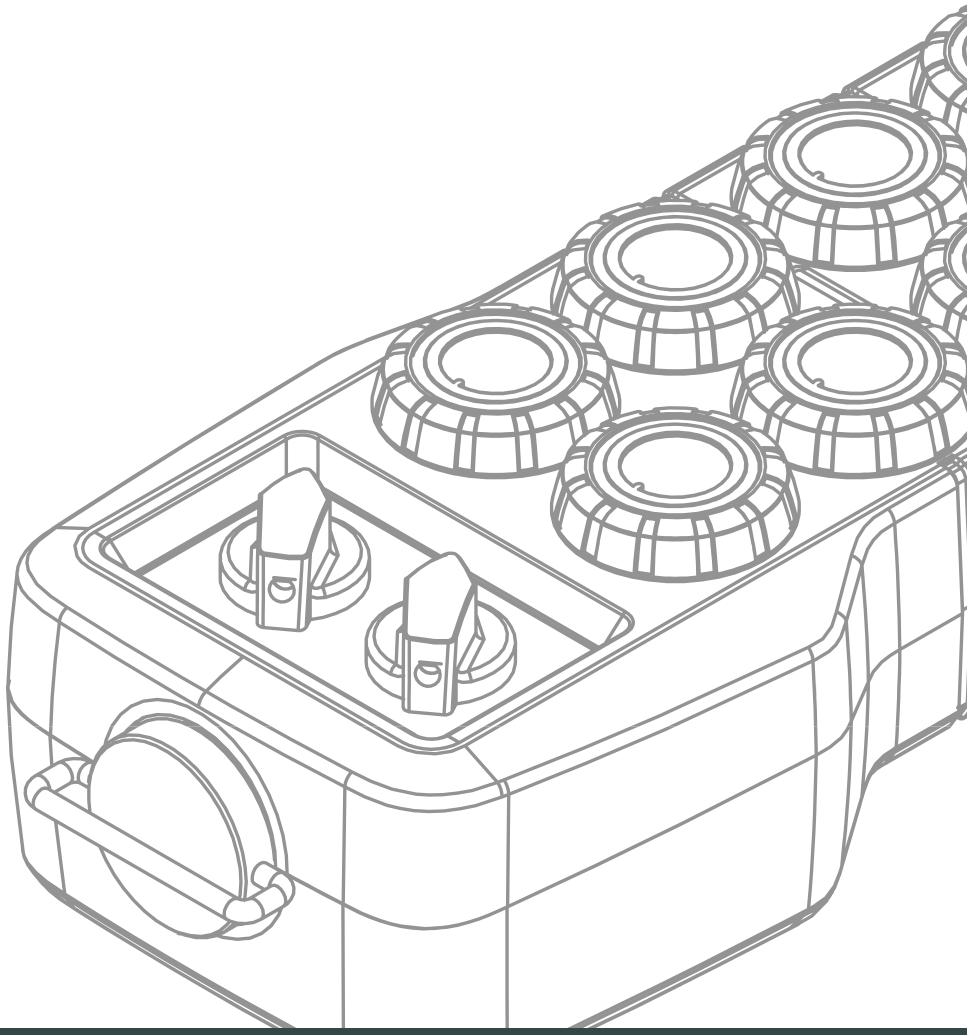

Edition 07/17 · We reserve the right to alter specifications without notice.