SMARTMESH-XT™ M2135-1, M2030-1

2.4 GHz Wireless Serial Motes

Product Description

The SmartMesh-XT™ M2135-1 and M2030-1 combine an industry-standard 802.15.4 radio with Time Synchronized Mesh Protocol (TSMP) to enable low-power wireless sensors and actuators with highly reliable wireless mesh networking. The M2135-1 and M2030-1 are tailored for use in battery- and line-powered wireless devices for applications that demand proven performance, scalability, and reliability.

The M2135-1 and M2030-1 use the IEEE standard 802.15.4 radio, which operates in the global license-free 2.4 GHz band. The M2030-1 offers a range of up to 200 meters outdoors, while keeping power consumption as low as 50 µA. Ideal for longer range applications, the M2135-1 has a highly efficient power amplifier which allows communications to reach more than 400 meters outdoors, while advanced power management techniques keep power consumption down to as low as 55 µA in a typical network deployment. The combination of extremely high reliability and low power consumption enables applications that require very low installation cost and low-maintenance, long-term deployments.

The standard serial interface of the M2135-1 and M2030-1 gives it flexibility to be used in a wide variety of different applications, from industrial process control to security, to lighting. When integrated into a product, the M2135-1 or M2030-1 acts like a network interface card (NIC)—it takes a data packet and makes sure that it successfully traverses the network. By isolating the wireless mesh networking protocols from the user, the M2135-1 and M2030-1 simplify the development process and reduce development risk.

Key Features

Reliable Networking

- Uses Time Synchronized Mesh Protocol (TSMP) for high reliability (>99.9% typical network reliability)
- Channel hopping over DSSS for interference rejection
- Mesh networking for built-in redundancy
- Every M2135-1/M2030-1 acts as both an endpoint and a router, increasing network reliability: “mesh-to-the-edge”
- Automatic self-organizing mesh is built in

Predictable Integration

- Standard HDLC serial interface with bidirectional flow control
- Industrial temperature range –40 to +85 °C
- Supports socket or solder assembly
- Rugged design for class I div I environments
- FCC and IC modular certification (pending)
- Certifiable for use in most countries worldwide (North America, Europe, and most Asian countries)

Low Power Consumption

- Ultra low-power components for long battery life
- Network-wide coordination for efficient power usage
- Down to 55 µA typical power consumption (M2135-1)
  Down to 50 µA typical power consumption (M2030-1)

802.15.4 Standard Radio

- Global 2.4 GHz license-free band: suitable for use in North America, Europe, and most of Asia
- 31.6 mW (+15 dBm) EIRP RF output power (M2135-1)
  0.6 mW (–2 dBM) EIRP RF output power (M2130-1)
- –90 dBm receiver sensitivity
- Outdoor range > 400 m typical (M2135-1)
  Outdoor range 200 m typical (M2030-1)
- Direct-sequence spread spectrum (DSSS) for additional interference rejection

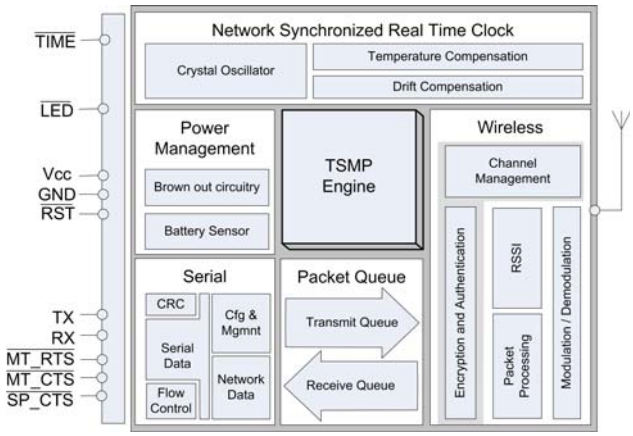

Contents

1.0 Absolute Maximum Ratings ... 3
2.0 Normal Operating Conditions ... 3
3.0 Electrical Specifications ... 4
3.1 Application Circuit ... 5
4.0 Radio ... 5
4.1 Detailed Radio Specifications ... 5
4.2 Antenna Specifications ... 6
5.0 Pinout ... 7
6.0 Mote Boot Up ... 8
6.1 Power-on Sequence ... 8
6.2 Inrush Current ... 8
6.3 Serial Interface Boot Up ... 9
7.0 Interfaces ... 9
7.1 Timestamps ... 9
7.2 Status ... 9
7.3 Serial Interface ... 10
7.3.1 Serial Handshake Protocol ... 10
7.3.1.1 Serial Port ... 10
7.3.1.2 Serial Interface Boot Up ... 11
7.3.1.3 Serial Interface Timing Requirements ... 11
7.3.2 Mote Command Data Types ... 13
7.3.3 Mote Commands ... 13
7.3.3.1 Command 0x80 Serial Payload Sent to Mote Serial ... 14
7.3.3.2 Command 0x81 Unacknowledged Serial Payload Received from Mote Serial ... 14
7.3.3.3 Command 0x82 Acknowledged Serial Payload Received from Mote Serial ... 15
7.3.3.4 Command 0x84 Time/State Packet ... 15
7.3.3.5 Commands 0x87 and 0x88 Set Parameter Request/Response ... 15
7.3.3.6 Commands 0x89 and 0x8A Get Parameter Request/Response ... 16
7.3.3.7 Command 0x8C Mote Information ... 16
7.3.3.8 Command 0x8D Reset Mote ... 17
7.3.4 Mote Get/Set Command Parameters ... 17
7.3.4.1 Error Codes ... 18
7.3.4.2 Parameter Type 0x01 Network ID ... 18
7.3.4.3 Parameter Type 0x02 Mote State ... 18
7.3.4.4 Parameter Type 0x03 Frame Length ... 19
7.3.4.5 Parameter Type 0x04 Join Key ... 20
7.3.4.6 Parameter Type 0x05 Time/State ... 20
7.3.4.7 Parameter Type 0x07 Mote information ... 21
7.3.5 HDLC Packet Processing Examples ... 22
8.0 Packaging Description ... 24
8.1 Mechanical Drawings ... 24
8.2 Soldering Information ... 25
9.0 Regulatory and Standards Compliance ... 25
9.1 FCC Compliance ... 25
9.1.1 FCC Testing ... 25
9.1.2 FCC-approved Antennae ... 26
9.1.3 OEM Labeling Requirements ... 26
9.2 IC Compliance ... 26
9.3 Industrial Environment Operation ... 26
10.0 Ordering Information ... 26

1.0 Absolute Maximum Ratings

The absolute maximum ratings shown below should under no circumstances be violated. Permanent damage to the device may be caused by exceeding one or more of these parameters.

Table 1 Absolute Maximum Ratings

Parameter	Min	Typ	Max	Units	Comments
Supply voltage (Vcc to GND)	-0.3		3.6	V	
Voltage on digital I/O pin	–0.3		V_{CC} +0.3 up to 3.6	V	
Input RF level			10	dBm	Input power at antenna connector
Storage temperature range	–45		+85	°C	
Lead temperature			+270	°C	For 10 seconds
VSWR of antenna			3:1		
* All voltages are referenced to GND					

The M2135-1/M2030-1 can withstand an electrostatic discharge of up to 2 kV Human Body Model (HBM) or 200 V Machine Model (MM) applied to any header pin, except the antenna connector. The antenna input can withstand a discharge of 50 V.

2.0 Normal Operating Conditions

Table 2 Normal Operating Conditions

Parameter	Min	Typ	Max	Units	Comments
Operational supply voltage range (between Vcc and GND)	2.7		3.3	V	Including noise and load regulation
Voltage on analog input pins	0		1.5	V	
Voltage supply noise			15	mVp-p	50 Hz–15 MHz
Peak current					
M2135-1			90	mA	Tx during OTAP, 5 ms max
M2135-1			75	mA	Tx, 5 ms maximum
M2135-1			30	mA	Rx, searching for network, 60 minutes
M2135-1			75	mA	Radio turn on, 300 µs max
M2030-1			45	mA	Tx during OTAP, 5 ms max
M2030-1			30	mA	Tx, 5 ms maximum
M2030-1			30	mA	Rx, searching for network, 60 minutes
M2030-1			75	mA	Radio turn on, 300 µs max
Average current M2135-1 M2030-1		 55 50		 µA µA	Assuming 40 byte packets, 1 per minute, data-only mote
Storage and operating temperatures	–40		85	°C	
Maximum allowed temperature ramp			8	°C/min	–40 °C to 85 °C

Unless otherwise noted, Table 3 assumes Vcc is 3.0 V and temperature is 25 °C.

Table 3 M2135-1 Current Consumption

Parameter	Min	Typ	Max	Units	Comments
Transmit		50		mA	
Receive		22		mA	
Sleep		10		µA	

Unless otherwise noted, Table 4 assumes Vcc is 3.0 V and temperature is 25 °C.

Table 4 M2030-1 Current Consumption

Parameter	Min	Typ	Max	Units	Comments
Transmit		20		mA	
Receive		22		mA	
Sleep		10		µA	

3.0 Electrical Specifications

.

Table 5 Device Load

Parameter	Min	Typ	Max	Units	Comments
Total capacitance (unclamped)		14	15.5	µF	Nominal value.

Unless otherwise noted, Vcc is 3.0 V and temperature is –40 to +85 °C.

Table 6 Digital I/O

Digital signal	Min	Typ	Max	Units	Comments
V_{IH} (logical high input)	Vcc x 80%	Vcc	Vcc + 0.3	V	
V_{IL} (logical low input)	GND –0.3	GND	GND + 0.6	V	
V_{OH} (logical high output)	0.7 x Vcc	Vcc	Vcc	V	
V_{OL} (logical low output)	GND	GND	0.25 x Vcc	V	
Digital current*					
Output source (single pin)		0.6		mA	25 °C
Output sink (single pin)		0.6		mA	25 °C
Input leakage current			50	nA	
* This current level guarantees that the output voltage meets V_{OL} of 0.25 x Vcc and V_{OH} of 0.7 x Vcc.					

3.1 Application Circuit

The following schematic shows how the M2135-1/M2030-1 mote is used in a circuit.

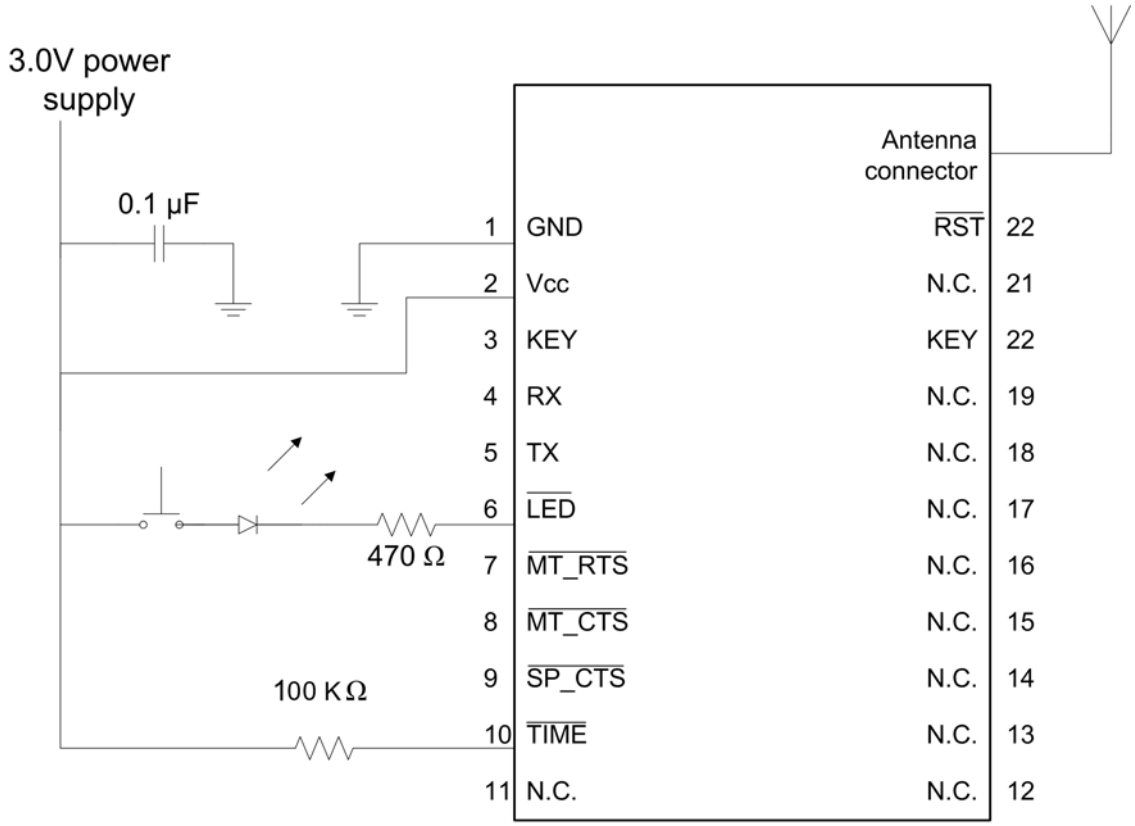

Figure 1 M2135-1/M2030-1 Mote in Application Circuit

4.0 Radio

4.1 Detailed Radio Specifications

Table 7 Radio Specifications

Parameter	Min	Typ	Max	Units	Comments
Operating frequency	2.4000		2.4835	GHz	
Number of channels		15			
Channel separation		5		MHz	
Occupied channel bandwidth		2.7		MHz	At –20 dBc
Modulation					IEEE 802.15.4 DSSS
Raw data rate		250		kbps	
Receiver sensitivity		–90		dBm	At 1% PER, Vcc = 3 V, 25 °C
Output power, EIRP					
M2135-1					
At 25 °C		+15		dBm	Vcc = 3 V, +2 dBi antenna
M2030-1					
At 25 °C		–2		dBm	Vcc = 3 V, +2 dBi antenna

Table 7 Radio Specifications

Parameter	Min	Typ	Max	Units	Comments
Range*					
M2135-1:					
Indoor		100		m	
Outdoor		400		m	25 °C, 50% RH, 1 meter above ground, +2 dBi omni-directional antenna
M2030-1:					
Indoor		25		m	
Outdoor		200		m	
* Actual RF range performance is subject to a number of installation-specific variables including, but not restricted to ambient temperature, relative humidity, presence of active interference sources, line-of-sight obstacles, near-presence of objects (for example, trees, walls, signage, and so on) that may induce multipath fading. As a result, actual performance varies for each instance.					

4.2 Antenna Specifications

A MMCX-compatible male connector is provided on board for the antenna connection. The antenna must meet specifications in Table 8.

Table 8 Antenna Specifications

Parameter	Value
Frequency range	2.4–2.4835 GHz
Impedance	50 Ω
Gain	+2 dBi maximum
Pattern	Omni-directional
Maximum VSWR	3:1
Connector	MMCX*
* The M2135-1 can accommodate the following RF mating connectors: • MMCX straight connector such as Johnson 135-3402-001, or equivalent • MMCX right angle connector such as Tyco 1408149-1, or equivalent	

When the mote is placed inside an enclosure, the antenna should be mounted such that the radiating portion of the antenna protrudes from the enclosure, and connected using a MMCX connector on a coaxial cable. For optimum performance, allow the antenna to be positioned vertically when installed.

5.0 Pinout

The M2135-1 and M2030-1 have two 11-pin Samtec MTMM-111-04-S-S-175-3 (or equivalent) connectors on the bottom side for handling all of the I/O. The third pin in each of the connectors is not populated, and serves as a key for alignment. The connectors are mounted on opposite edges of the long axis of the mote.

The M2135-1 and M2030-1 provide a bidirectional flow-controlled serial interface (serial protocol is specified in 7.3.1).

Figure 2 M2135-1/M2030-1 Package with Pin Labels

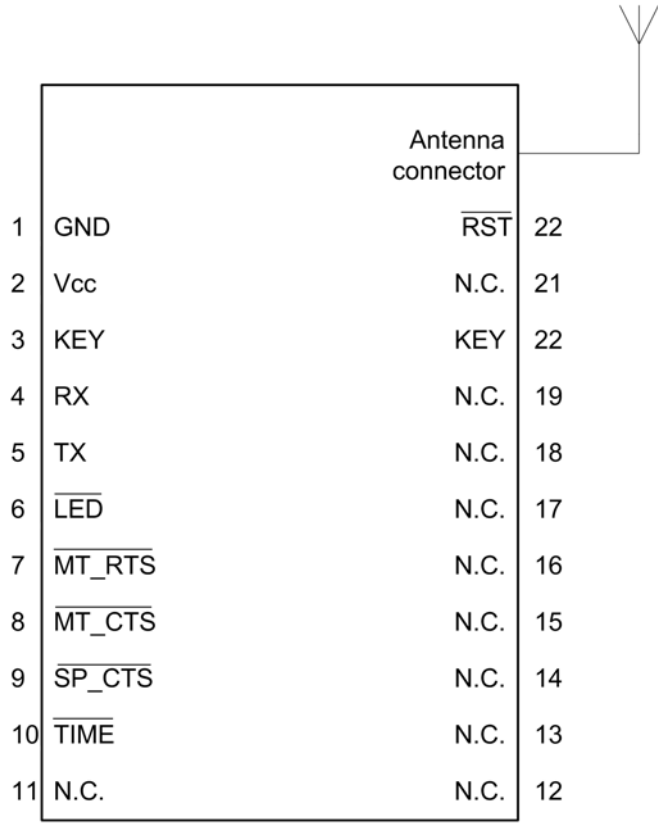

Table 9 M2135-1/M2030-1 Pin Functions

Pin Number	Name	Mote I/O Direction	Internal Pull Up/Down
1	GND	-	None
2	VCC	-	None
3	KEY (no pin)	-	None
4	RX	In	None
5	TX	Out	None
6	$\overline{\text{LED}}$	Out	None
7	$\overline{\text{M T_RTS}}$	Out	None
8	$\overline{\text{MT_CTS}}$	Out	None
9	$\overline{\text{SP_CTS}}$	In	None
10	$\overline{\text{TIME}}$	In	None
11	*No Connection*	-	None
12	*No Connection*	-	None
13	*No Connection*	-	None
14	*No Connection*	-	None
15	*No Connection*	-	None
16	*No Connection*	-	None
17	*No Connection*	-	None
18	*No Connection*	-	None
19	*No Connection*	-	None
20	KEY (no pin)	-	None
21	*No Connection*	-	None
22	$\overline{\text{RST}}$	In	100 kΩ pull up

The $\overline{\text{RST}}$ input pin is internally pulled up, and is optional. When driven active low, the mote is hardware reset until the signal is deasserted. Refer to section 6.1 for timing requirements on the $\overline{\text{RST}}$ pin. Note that the mote may also be reset using the mote serial command (see section 7.3.3.8).

The $\overline{\text{TIME}}$ input pin is optional, and must either be driven or pulled up with a 5.1 MΩ resistor. Unless noted otherwise, all signals are active low.

6.0 Mote Boot Up

6.1 Power-on Sequence

The external supply and other power-on devices must provide the mote with a specific sequence of power and reset as follows:

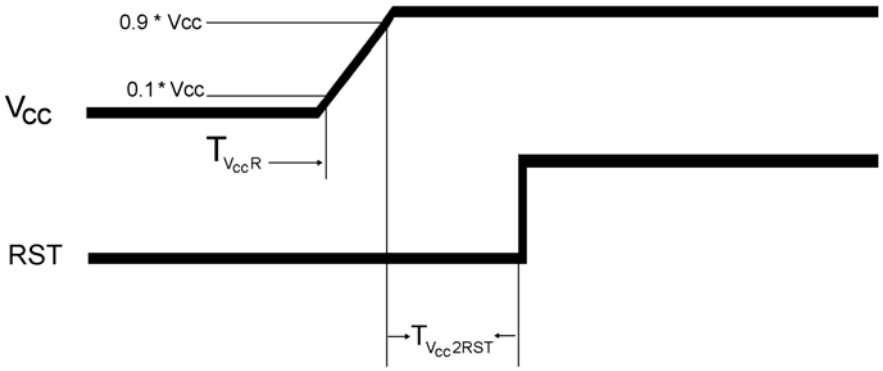

Figure 3 Power-on Sequence

Table 10 Power-on Sequence

Parameter	Min	Typ	Max	Units	Comments
T_{VccR}			500	µs	
$T_{Vcc2RST}$	10			ms	

6.2 Inrush Current

During power on, the mote can be modeled as a lumped impedance of 1 Ohm and 2.5 µF, as shown in Figure 4. With a source impedance (R_{src}) of 2 Ohms, the inrush current on the mote appears as shown in Figure 5.

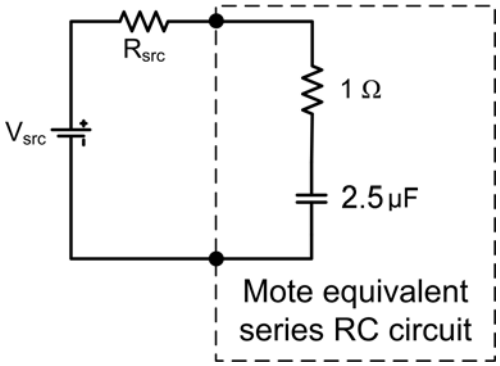

Figure 4 M2135/M2030 Equivalent Series RC Circuit

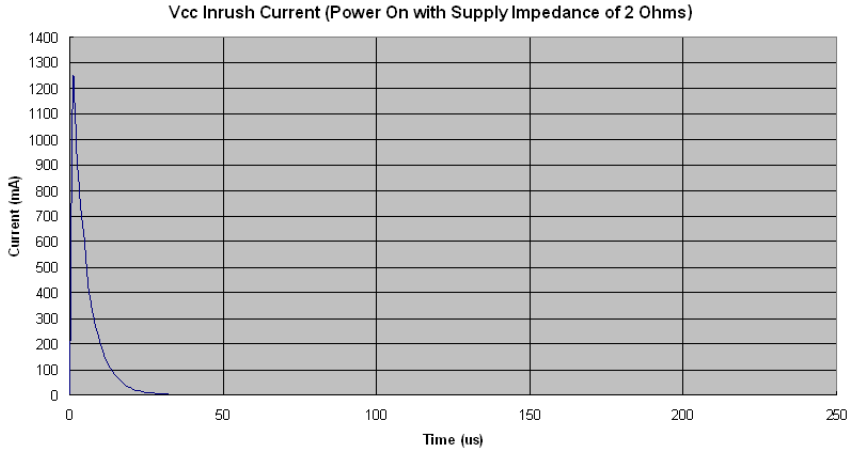

Figure 5 Vcc Inrush Current

6.3 Serial Interface Boot Up

Upon mote power up, the $\overline{\text{MT_CTS}}$ line is high (inactive). The mote serial interface boots within boot_delay (see Table 14) of the mote powering up, at which time the mote will transmit an HDLC Mote Information packet, as described below in section 7.3.3.7. Note that full handshake (see 7.3.1.3) is in effect and is required to receive this packet.

7.0 Interfaces

7.1 Timestamps

The M2135-1/M2030-1 has the ability to deliver network-wide synchronized timestamps. The M2135-1/M2030-1 sends a time packet (as described in Table 42) through its serial interface when one of the following occurs:

- Mote receives an HDLC get_parameter request for time/state (see Table 41)
- Mote $\overline{\text{TIME}}$ signal is activated

The $\overline{\text{TIME}}$ pin is optional and has the advantage of being more accurate. The value of the timestamp is taken within approximately a millisecond of receiving a $\overline{\text{TIME}}$ signal activation. If the HDLC request is used, because of packet processing, the value of the timestamp may be captured several milliseconds after receipt of the packet. The real time delivered to the sensor processor is relative to the real time clock on the Manager which serves as the network real time clock (NRTC). The time stamp skew across the network is guaranteed to be within ±250 ms of the NRTC.

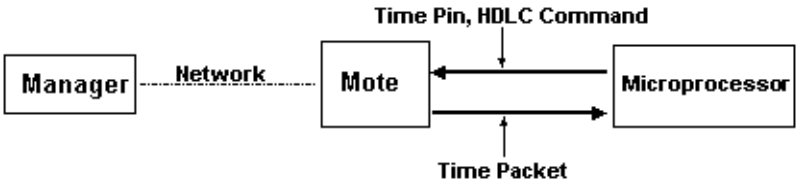

Figure 6 Real Time

When the time pin is activated for at least min_strobe_length (see Table 14), the mote responds by sending the time packet within 100 ms delay.

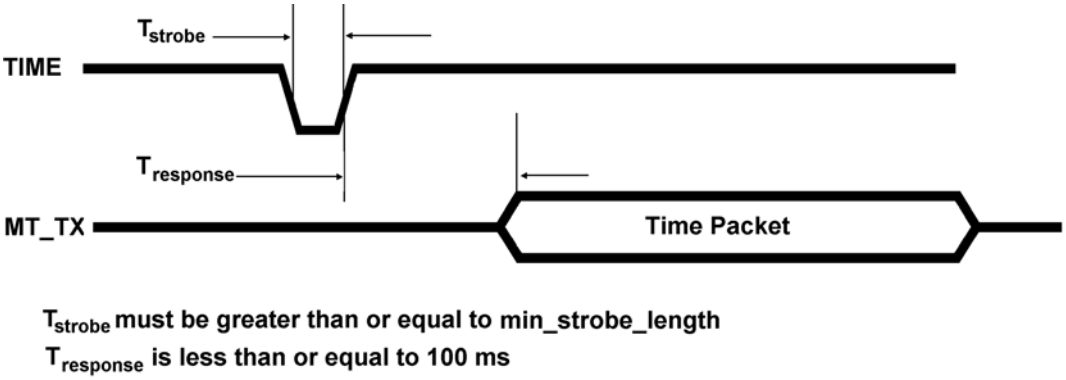

Figure 7 Operation of Time Pin

7.2 Status

The M2135-1/M2030-1 provides an output signal driving a status $\overline{\text{LED}}$. This $\overline{\text{LED}}$ displays network connectivity information and is used during mote installation. Alternatively, the mote's network status may be polled via serial using the Get Parameter command (see 7.3.3.6) with the mote state parameter (see 7.3.4.3).

Table 11 Status $\overline{\text{LED}}$

$\overline{\text{LED}}$ Appearance	Mote State
Off	Off, or in sleep mode
Slow single blink (100 ms on, 900 ms off)	On, and searching for potential network
Single blink (100 ms on, 400 ms off)	On, and attempting to join network
Double blink (100 ms on, 100 ms off, 100 ms on, 700 ms off)	On, connected to network, attempting to establish redundant links
Solid on	On, fully configured into network with redundant parents

7.3 Serial Interface

The M2135-1/M2030-1 offers a well-defined serial interface that is optimized for low-powered embedded applications. This serial interface offers a serial port comprised of the data pins (TX, RX) as well as the handshake pins ($\overline{\text{MT_RTS}}$, $\overline{\text{MT_CTS}}$, $\overline{\text{SP_CTS}}$) used for bidirectional flow control. Through this port, the M2135-1/M2030-1 provides a means of transmitting and receiving serial data through the wireless network, as well as a command interface which provides synchronized time stamping, local configuration, and diagnostics.

The following sections detail the Serial Interface Protocol, the Mote Command Interface, and the timestamping capability of the M2135-1/M2030-1 serial interface.

7.3.1 Serial Handshake Protocol

The Serial Interface Protocol handshake provides for flow control of packets transmitted via the M2135-1/M2030-1 serial interface. Packet delineation and error control are handled separately. The Interface supports the following:

- Full-duplex communication
- Bidirectional byte-level flow control

7.3.1.1 Serial Port

The five-pin serial port is comprised of the data pins (TX, RX) as well as the handshake pins ($\overline{\text{MT_RTS}}$, $\overline{\text{MT_CTS}}$, $\overline{\text{SP_CTS}}$) used for bidirectional flow control. This port supports 9600 bps operation in full-duplex mode. The handshake signals are active low.

Table 12 Serial Parameters

Parameter	Value
Bit rate	9600
Start bit	1
Data bits	8
Parity	None

The following diagram illustrates the pins used in the handshaking protocol:

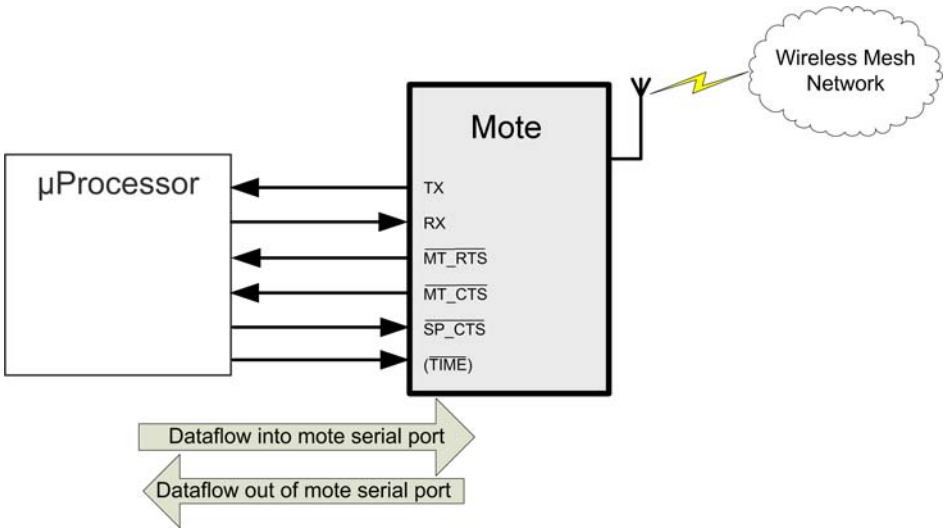

Figure 8 Diagram of Pins Used in Handshaking Protocol

Table 13 Pin Usage

Pin	Usage
RX, TX	Used for serial data flow into and out of the mote.
MT_RTS	This signal goes active low when the mote is ready to send a serial packet. The signal stays low until the SP_CTS signal from the microcontroller goes active low (indicating readiness to receive a packet) or the ack_delay timeout (see Table 14) expires.
SP_CTS	SP_CTS should transition from high to active low in response to the MT_RTS signal from the mote.This indicates that the microcontroller is ready to receive serial packets. Following this, the microcontroller should strobe SP_CTS after receiving each byte. After all packets are received, the microcontroller should de-assert the SP_CTS signal.
MT_CTS	MT_CTS indicates the state of the network connection and availability of data buffers to receive packets destined for the network. Once the mote has established wireless network connection, it will use the MT_CTS pin to signify availability to accept serial packets for wireless transmission. At certain critical times during communication, the mote may bring MT_CTS high. MT_CTS will remain high if the mote does not have enough buffer space to accept another packet. It will also remain high if the mote is not part of the network. OEM designs must check that the MT_CTS pin is low before initiating each serial packet for wireless transmission. Note that the mote may receive diagnostic serial packets at any time regardless of the CTS state. Upon receipt of the first byte of the HDLC packet, the mote strobes MT_CTS in acknowledgement of each subsequent byte. After the last byte of the packet is received, MT_CTS switches back to signaling the availability of the network connection and data buffers. The microcontroller should wait a minimum of interpacket_delay (see Table 14) before initiating another packet transmission. The mote can accept diagnostics (packets that are not sent through the network) at any time, and the status of the MT_CTS pin may be ignored when initiating these packets. (MT_CTS will acknowledge each byte as specified in 7.3.1.3.1.
TIME	The TIME pin is optional and can be used for triggering a timestamp packet. For details, refer to 7.1.

7.3.1.2 Serial Interface Boot Up

Upon mote power up, the MT_CTS line is high (inactive). The mote serial interface boots within 250 ms of the mote powering up, at which time the mote will transmit an HDLC Mote Information packet, as described below in section 7.3.3.7. Note that full handshake (see 7.3.1.3) is in effect and is required to receive this packet.

7.3.1.3 Serial Interface Timing Requirements

7.3.1.3.1 CTS Byte-level Handshake

The following diagram shows generic CTS byte-level flow control timing. The following details are applicable to both MT_CTS and SP_CTS.

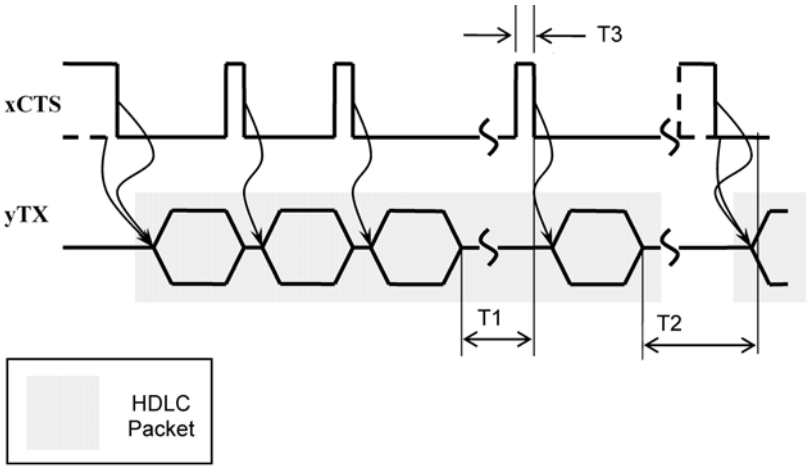

Figure 9 CTS Byte-level Flow Control Timing

Timeouts T1, T2, and T3 are defined as follows (refer to Table 14 for values):

- **T1:interbyte_timeout—**Maximum time between the transmit module sending a byte and the receiving module acknowledging the byte using CTS (requests the next byte)
- **T2: interpacket_delay—**For communications into the mote, the minimum time after the mote receives the last byte of a packet before it can start receiving the next packet. For communications out of the mote, the minimum time between the mote receiving acknowledgement of the last byte reception (or timeout) and the mote driving RTS to request to send another packet.
- **T3: min_strobe_length—**The minimum length of time that CTS must be held active to be recognized by the receiver.

In idle mode or upon expiration of the interbyte_delay timeout, the transmit side treats CTS as level triggered ($\overline{\text{MT_CTS}}$ is disregarded in case of diagnostic serial packets). After transfer of the first byte of a packet, the meaning of CTS signal is changed to a byte acknowledgement strobe, active on a falling edge. In other words, CTS becomes a request signal for the next byte of a packet. This acknowledgement strobe will occur for all packets (both diagnostic and network packets). Whenever timeouts T1 or T2 occur, the packet is discarded and both sides switch to idle mode and start hunting for the next HDLC packet, assuming CTS active low. If a packet is transferred completely, the interbyte_delay after the last byte naturally takes care of switching to idle mode.

7.3.1.3.2 Data Flow Out of the Mote Serial Port

Figure 10 illustrates the process the mote uses to transmit serial data:

1. The mote ensures the interpacket_delay time has passed since the last transmission.
2. The mote drives $\overline{\text{MT_RTS}}$ to active, waits for a falling edge on $\overline{\text{SP_CTS}}$. Timeout is defined as ack_delay, and is long enough to handle the worst case response.
3. If the mote times out before the $\overline{\text{SP_CTS}}$ becomes active, the mote restores $\overline{\text{MT_RTS}}$ to inactive and drops the packet.
4. If $\overline{\text{SP_CTS}}$ is active, then the mote transmits the first byte and follows the CTS byte-level handshaking rules for subsequent bytes.
5. $\overline{\text{MT_RTS}}$ is restored to inactive after the ack_delay timeout has expired.

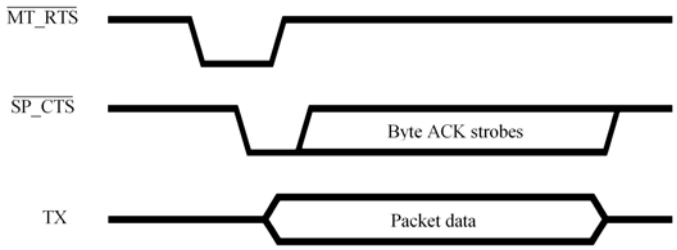

Figure 10 Packet Transmission from Mote

7.3.1.3.3 Data Flow into the Mote Serial Port

Figure 11 illustrates the process the mote uses to receive serial data:

The mote may receive serial packets for local commands (not intended for wireless transmission) at any time regardless of the $\overline{\text{MT_CTS}}$ status.

The mote signals its readiness to receive serial packets for wireless transmission (serial payload command 0x80) by driving $\overline{\text{MT_CTS}}$ active low. The mote will drive $\overline{\text{MT_CTS}}$ low within *interpacket_delay* time after the transmission of the last packet.

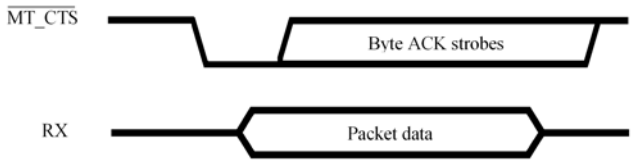

Figure 11 Packet Transmission to Mote

7.3.1.3.4 Timing Values

Table 14 Timing Values

Variable	Meaning	Min	Max	Unit
interbyte_delay	The time between consecutive data bytes cannot exceed this time.	0	7	ms
interpacket_delay	The sender of an HDLC packet must wait at least this amount of time before sending another packet.	N/A	20	ms
ack_delay	The max time delay between the $\overline{\text{MT_RTS}}$ and the receivers acknowledge, $\overline{\text{SP_CTS}}$.	0	500	ms
time_ack_timeout	The mote responds to all $\overline{\text{TIME}}$ pin activation requests within this time.	N/A	100	ms
diag_ack_timeout	The mote responds to all requests within this time.	N/A	125	ms
min_strobe_length	The length of the strobe signal.	500		ns
boot_delay	The time between mote power up and serial interface availability.		250	ms

7.3.2 Mote Command Data Types

Table 15 defines the command data types used in the commands.

Table 15 Command Data Types

Data Type	Description
ULong	Unsigned long: 4 bytes
UShort	Unsigned short: 2 bytes
UChar	Unsigned character: 1 byte character

7.3.3 Mote Commands

The mote command interface provides a way to send and receive network packets, access local configuration and diagnostics, and receive time stamps. All packets between the microcontroller and the mote are encapsulated in the HDLC format (RFC 1662) and have the following structure.

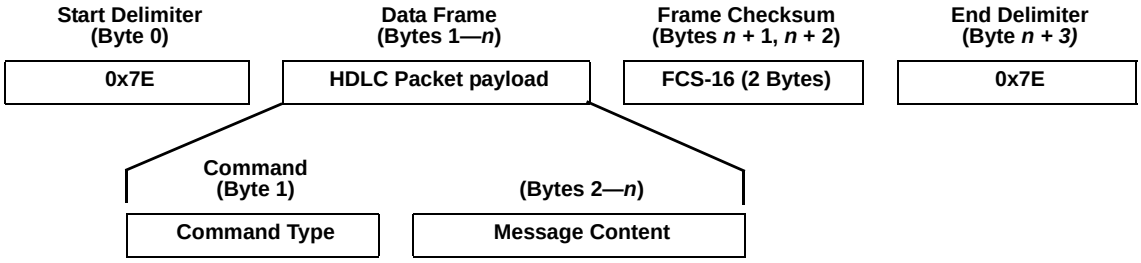

The command type indicates which API message is contained in the message content. The message content for each command type is described within the following sections.

The frame checksum (FCS) is calculated based on the 16-bit FCS computation method (FCS-16, RFC 1662). The mote checks the FCS and drops packets that have FCS errors. There is no mechanism for the mote to tell the microcontroller that a packet has been discarded, so the applications layer must implement reliable delivery, if desired. All numerical fields in a packet are in big endian order (MSB first), unless otherwise noted. Section 7.3.5 provides an example of HDLC packet construction and HDLC packet decoding.

Table 16 provides a summary of mote commands, which are described in detail in the following sections. For error handling, all other packet types should be ignored.

Table 16 Mote Command Summary

Command Type (HEX)	Direction	Description
0x80	Microcontroller to Mote	Packet destined for the network
0x81	Mote to Microcontroller	Unacknowledged packet received from the network and destined for microcontroller
0x82	Mote to Microcontroller	Acknowledged packet received from the network and destined for microcontroller
0x83	--	Reserved
0x84	Mote to Microcontroller	Time and mote state information
0x85	--	Reserved
0x86	--	Reserved
0x87	Microcontroller to Mote	“Set Parameter” request
0x88	Mote to Microcontroller	“Set Parameter” response
0x89	Microcontroller to Mote	“Get Parameter” request
0x8A	Mote to Microcontroller	“Get Parameter” response
0x8C	Mote to Microcontroller	Mote information
0x8D	Microcontroller to Mote	Reset mote

7.3.3.1 Command 0x80 Serial Payload Sent to Mote Serial

Serial Data Packets going into the mote serial port use the command type 0x80. Upon reception of the packet, the mote forwards it to the network. The format of the serial packet payload is transparent to the mote. The maximum length of the payload is 80 bytes (excluding byte-stuffing bytes). There is no response by the mote upon reception of this command.

Table 17 Command 0x80 Serial Payload to Mote

Msg Byte	Description	Data Type	Request (Sent to Mote)
1	Cmd Type	UChar	0x80
2		(Transparent to mote)	n bytes of data
2+1		(Transparent to mote)	*
2+…		(Transparent to mote)	*

7.3.3.2 Command 0x81 Unacknowledged Serial Payload Received from Mote Serial

Unacknowledged serial data packets going out of the mote serial port use command type 0x81. The network uses this command to send data out through the mote serial interface. Upon receiving this packet from the network, the mote forwards it to the microcontroller without sending acknowledgement to Manager. The format of the serial packet payload is transparent to the mote. The maximum length of the payload is 80 bytes (excluding byte-stuffing bytes).

Table 18 Command 0x81 Unacknowledged Serial Payload from Mote

Msg Byte	Description	Data Type	Value
1	Cmd Type	UChar	0x81
2		(Transparent to mote)	n bytes of data
2+1		(Transparent to mote)	*
2+…		(Transparent to mote)	*

7.3.3.3 Command 0x82 Acknowledged Serial Payload Received from Mote Serial

Acknowledged serial data packets going out of the mote use command type 0x82. The network uses this command to send data out through the mote serial interface. Upon receiving this packet from the network, the mote forwards it to the microcontroller and sends an acknowledgement back to Manager. The format of the serial packet payload is transparent to the mote. The maximum length of the payload is 80 bytes (excluding byte-stuffing bytes). The microcontroller receives exactly one copy of the message that was sent through the network.

Table 19 Command 0x82 Acknowledged Serial Payload Downstream

Msg Byte	Description	Data Type	Value
1	Cmd Type	UChar	0x82
2		(Transparent to mote)	n bytes of data
2+1		(Transparent to mote)	*
2+…		(Transparent to mote)	*

7.3.3.4 Command 0x84 Time/State Packet

Time data packets use the command type 0x84. The time packet includes the network time and the current real time relative to the Manager. The mote sends this response when it receives a “get request” with “time” parameter (described later) or when the $\overline{\text{TIME}}$ pin is strobed high to low for minimum of min_strobe_length, as defined in Table 14. Usage of the $\overline{\text{TIME}}$ pin is described in section 7.1.

Table 20 Command 0x84 Time/State Packet

Msg Byte	Description	Data Type	Value
1	Cmd Type	UChar	0x84
2-5	The sequential number of the frame	ULong	Cycle
6-9	The offset from start of frame in microseconds	ULong	Offset
10-11	Frame length in timeslots	UShort	Frame Length
12-15	UTC time seconds	ULong	Real Time part1
16-19	UTC time microseconds	ULong	Real Time part2
20-23	Time from the last mote reset in milliseconds	ULong	Mote uptime
24	Mote state (see Table 35)	UChar	Mote state
25	Mote diagnostics status (see Table 36)	UChar	Mote diagnostics status

7.3.3.5 Commands 0x87 and 0x88 Set Parameter Request/Response

The Set Parameter command allows the setting of a number of configuration parameters in the mote. When the Set Parameter Request command is sent, the response to the request is sent within the diag_ack_timeout (see Table 14). The command structure for individual Parameter Types and can be found in section 7.3.4. The length of payload '*n*' is dependant on the Parameter type and is specified in the Parameter Data Packet section of this document.

Table 21 Command 0x87 Set Parameter Request

Msg Byte	Description	Data Type	Value
1	Cmd Type	UChar	0x87
2		UChar	Parameter Type
3	Data	(Transparent to mote)	n bytes of data
3+1	Data	(Transparent to mote)	*
3+…	Data	(Transparent to mote)	*

.

Table 22 Command 0x88 Set Parameter Response

Msg Byte	Description	Data Type	Value
1	Cmd Type	UChar	0x88
2		UChar	Parameter Type
3		UChar	Error code
3+1		UChar	Data Length (0x00)

7.3.3.6 Commands 0x89 and 0x8A Get Parameter Request/Response

The Get Parameter command allows a number of configuration parameters in the mote to be read by serial. When a Get Parameter Request command is sent, the response to the request is sent within the diag_ack_timeout of 100 ms. The command structure for individual parameter types can be found in section 7.3.4. The length of payload '*n*' depends on the parameter type and is specified in that section. If the error code is not equal to 0, then no data is returned in the response. Error codes are described in Table 30.

Table 23 Command 0x89 Get Parameter Request

Msg Byte	Description	Data Type	Value
1	Cmd Type	UChar	0x89
2		UChar	Parameter Type
3	Data	(Transparent to mote)	n bytes of data
3+1	Data	(Transparent to mote)	*
3+...	Data	(Transparent to mote)	*

Table 24 Command 0x8A Get Parameter Response

Msg Byte	Description	Data Type	Value
1	Cmd Type	UChar	0x8A
2		UChar	Parameter Type
3		UChar	Error code
4		UChar	Data Length
5	Data	(Transparent to mote)	n bytes of data (If Error Code != 0)
5+1	Data	(Transparent to mote)	*
5+...	Data	(Transparent to mote)	*
5+n	Data	(Transparent to mote)	*

7.3.3.7 Command 0x8C Mote Information

The mote sends this packet on bootup, supplying information about mote properties. For details on bootup, see 7.3.1.2.

Table 25 Command 0x8C – Mote Information

Msg Byte	Description	Data Type	Value
1	Cmd Type	UChar	0x8C
2-4	HW model	Array of 3 UChar	HW model
5-6	HW revision	Array of 2 UChar	HW revision
7-10	SW revision	Array of 4 UChar	SW revision
11-18	MAC address	Array of 8 UChar	MAC addr
19	Networking type	UChar	2 = 2.4 GHz network
20-21	Network ID	UShort	Network ID

Table 25 Command 0x8C – Mote Information

Msg Byte	Description	Data Type	Value
22-29	Datasheet ID	Array of 8 UChar	Datasheet ID
30-31	Mote ID	UShort	Mote ID
32			Reserved
33	Mote diagnostics status (see Table 36)	UChar	Mote diagnostics status

7.3.3.8 Command 0x8D Reset Mote

Upon receiving this command, the mote notifies its neighbors about an upcoming reset, then proceeds to reset itself. The delay to the actual reset depends on the network configuration.

Table 26 Command 0x8D Reset Mote

Msg Byte	Description	Data Type	Value
1	Cmd Type	UChar	0x8D

7.3.4 Mote Get/Set Command Parameters

This section specifies the parameters that may be used with the Set and Get Commands. Table 27 provides an overview of the these parameters.

Table 27 Set and Get Command Parameters

Parameter	Set Parameter	Get Parameter	Description
Parameter type 0x01	X		Sets the mote's network ID
Parameter type 0x02		X	Retrieves the mote's current network connection state
Parameter type 0x03		X	Retrieves the network frame length
Parameter type 0x04	X		Sets the network join key on the mote
Parameter type 0x05		X	Retrieves the network time and mote state information
Parameter type 0x06		--	Reserved
Parameter type 0x07		X	Retrieves the mote's properties

All requests have the following structure:

Table 28 Request Structure for Parameter Data Packets

Command Type	Parameter Type	Data (Optional)
1 byte	1 byte	Up to 33 bytes

All replies have the following structure:

Table 29 Reply Structure for Parameter Data Packets

Command Type	Parameter Type	Error Code	Data Length	Data (Optional)
1 byte	1 byte	1 byte	1 byte	Up to 31 bytes

Command Types, Parameter types, and error codes are discussed in the following sections. Data length is the number of bytes of following data, set to 0 in case of non-zero error code.

7.3.4.1 Error Codes

Table 30 Error Codes

Number	Error	Description
0	DIAG_NO_ERR	No Command-Specific Errors
1	DIAG_EXE_ERR	Mote unable to execute command
2	DIAG_PARAM_ERR	Illegal parameter in the request

7.3.4.2 Parameter Type 0x01 Network ID

The network ID is the identification number used to distinguish different wireless networks. In order to join a specific network, the mote must have the same network ID as the network Manager. This parameter is only valid for the Set Parameter command. Upon receiving this request, the mote stores the new network ID in its persistent storage area, but continues to use the existing network ID. The mote must be reset in order to begin using the new network ID.

Table 31 Parameter Type 0x01 Network ID Set Request

Msg Byte	Description	Data Type	Value
1	Cmd Type	UChar	0x87
2	Parameter Type	UChar	0x01
3-4	Network ID	UShort	Network ID

The following packet is sent in response to a request to set the network ID.

Table 32 Parameter Type 0x01 Network ID Set Response

Msg Byte	Description	Data Type	Value
1	Cmd Type	UChar	0x88
2	Parameter Type	UChar	0x01
3		UChar	Error code
4		UChar	Data Length (0x00)

7.3.4.3 Parameter Type 0x02 Mote State

This parameter is only valid for the Get Parameter command and is used to retrieve the mote's current network connection state (see Table 35).

Table 33 Parameter Type 0x02 Mote State Get Request

Msg Byte	Description	Data Type	Value
1	Cmd Type	UChar	0x89
2	Parameter Type	UChar	0x02

The following packet is sent in response to a request to retrieve the mote's current network connection state.

Table 34 Parameter Type 0x02 Mote State Get Response

Msg Byte	Description	Data Type	Value
1	Cmd Type	UChar	0x8A
2	Parameter Type	UChar	0x02
3		UChar	Error code
4		UChar	Data Length (0x01)
5		UChar	Mote State
6	Mote diagnostics status (see Table 36)	UChar	Mote diagnostics status

Table 35 Mote States

State #	Description	Details
1	ACTIVE	The mote has joined the network and is waiting to be configured.
2	JOINING	The mote has sent JOIN request, waiting for ACTIVATE.
3	ACT SEARCH	The mote is actively searching for neighbors.
4–5	PASS SEARCH	The mote is passively searching for neighbors.
6	SYNCHRONIZED	The mote is synchronized to a network, listening in active search.
7–8	RESETTING	The mote is going through the reset process.
9	ONLINE1	The mote has joined a network and has been fully configured, but has only one parent. The mote is ready to transmit data to the network.
10	ONLINE2	The mote has joined a network, has been fully configured, and has multiple parents. The mote is ready to transmit data to the network.

Table 36 Diagnostics Status

Bit	Name	Details
7	---	Reserved.
6	---	Reserved.
5	---	Reserved.
4	---	Reserved.
3	---	Reserved.
2	---	Reserved.
1	CCF	Configuration change flag (see section 7.3.4.3.1).
0	NV_ERR	Non-volatile memory error.

7.3.4.3.1 Configuration Change Flag (CCF)

The Configuration Change Flag (CCF) bit is set high when the network Id is changed. Note that when the network Id is changed over the air (using the XML-API), the entire network synchronously changes over to the new network Id. There is a delay between when the XML-API command is received and when motes change over to the new network Id. The CCF bit is set high when the new network Id becomes active. The CCF bit is cleared when the mote receives a Mote Information Get request (Parameter 0x07) or the mote is reset.

7.3.4.4 Parameter Type 0x03 Frame Length

This parameter is only valid for the Get Parameter command and is used to retrieve the frame length of the specified frame ID.

Table 37 Parameter Type 0x03 Frame Length Get Request

Msg Byte	Description	Data Type	Value
1	Cmd Type	UChar	0x89
2	Parameter Type	UChar	0x03
3		UChar	Frame ID

The following packet is sent in response to a request to retrieve the frame length.

Table 38 Parameter Type 0x03 Frame Length Get Response

Msg Byte	Description	Data Type	Value
1	Cmd Type	UChar	0x8A
2	Parameter Type	UChar	0x03
3		UChar	Error code
4		UChar	Data Length (0x05)
5		UChar	Frame ID
6-9	Frame Length (ms)	ULong	Frame Length

7.3.4.5 Parameter Type 0x04 Join Key

The join key is needed to allow a mote on the network. The join key is specific for the network and used for data encryption. This parameter is only valid for a Set Parameter command. Upon receiving this request, the mote stores the new join key in its persistent storage. The mote must be reset in order to begin using the new join key.

Table 39 Parameter Type 0x04 Join Key Set Request

Msg Byte	Description	Data Type	Value
1	Cmd Type	UChar	0x87
2	Parameter Type	UChar	0x04
3-18	New Join Key	Array of 16 UChar	New Join Key

The following packet is sent in response to a request to set the join key.

Table 40 Parameter Type 0x04 Join Key Set Response

Msg Byte	Description	Data Type	Value
1	Cmd Type	UChar	0x88
2	Parameter Type	UChar	0x04
3		UChar	Error code
4		UChar	Data Length (0x00)

7.3.4.6 Parameter Type 0x05 Time/State

This parameter is only valid for the Get Parameter command and is used to request the network time and mote state information. The response to this command returns the same information as Command 0x84 (Time/State Packet), with the only difference being that this command can be solicited using a software Get command, rather than a hardware pin.

Table 41 Parameter Type 0x05 Time/State Get Request

Msg Byte	Description	Data Type	Value
1	Cmd Type	UChar	0x89
2	Parameter Type	UChar	0x05

The following packet is sent in response to a request for the network time and mote state information.

Table 42 Parameter Type 0x05 Time/State Get Response

Msg Byte	Description	Data Type	Value
1	Cmd Type	UChar	0x8A
2	Parameter Type	UChar	0x05
3		UChar	Error code
4		UChar	Data Length (0x17)

Table 42 Parameter Type 0x05 Time/State Get Response

Msg Byte	Description	Data Type	Value
5-8		ULong	Cycle
9-12		ULong	Offset (µsec)
13-14	Frame Length (slots)	UShort	Frame Length
15-18	UTC Time sec	ULong	UTC Time sec
19-22	UTC Time µsec	ULong	UTC Time µsec
23-26	Mote uptime msec	ULong	Mote uptime msec
27		UChar	Mote state
28	Mote diagnostics status (see Table 36)	UChar	Mote diagnostics status

7.3.4.7 Parameter Type 0x07 Mote information

This parameter is only valid for the Get Parameter command. It is a diagnostics request that retrieves information about the mote's properties.

Table 43 Parameter Type 0x07 Mote Information Get Request

Msg Byte	Description	Data Type	Value
1	Cmd Type	UChar	0x89
2	Parameter Type	UChar	0x07

The following packet is sent in response to a request for information about mote properties.

Table 44 Parameter Type 0x07 Mote Information Get Response

Msg Byte	Description	Data Type	Value
1	Cmd Type	UChar	140 (0x8A)
2	Parameter Type	UChar	0x07
3	Error Code	UChar	Error Code
4	Data length	UChar	Data length (0x1F)
5-7	HW model	Array of 3 UChar	HW model
8-9	HW revision	Array of 2 UChar	HW revision
10-13	SW revision	Array of 4 UChar	SW revision
14-21	MAC address	Array of 8 UChar	MAC addr
22	Networking type	UChar	2 = 2.4 GHz network
23-24	Network ID	UShort	Network ID
25-32	Datasheet ID	Array of 8 UChar	Datasheet ID
33-34	Mote ID	UShort	Mote ID
35			Reserved
36	Mote diagnostics status (see Table 36)	UChar	Mote diagnostics status

7.3.5 HDLC Packet Processing Examples

Example 1: Constructing an HDLC packet to send to the mote

This example demonstrates how you would construct an HDLC packet to set the network ID value to 125. (All values are in hexadecimal.)

Step 1 Define HDLC packet payload:

Command type => 87
Parameter => 01
Network ID => 7D

HDLC Packet Payload	
Command Type	**Message Content**
87	01 00 7D

Step 2 Calculate FCS:

a. Calculate the FCS using FCS-16 algorithm (RFC 1662) on the hexadecimal sequence '87 01 00 7D'. The FCS (including 1's complement) is 74 2F.

b. Append FCS to payload, FCS is sent least significant byte first (RFC 1662):

HDLC Packet Payload	FCS
87 01 00 7D	2F 74

Step 3 Perform byte stuffing.

To perform byte stuffing, check the HDLC Packet Payload and FCS for instances of “7D” or “7E” and replace as follows:

7D => 7D 5D
7E => 7D 5E

Note that the additional control bytes do not count against the 80-byte payload limit.

HDLC Packet Payload (stuffed)	FCS (stuffed)
87 01 00 **7D 5D**	2F 74

Step 4 Add start and stop delimiters:

Enclose the above in start/stop flags (RFC 1662).

Start Delimiter	HDLC Packet Payload (stuffed)	FCS (stuffed)	Stop Delimiter
7E	87 01 00 7D 5D	2F 74	7E

Or simply, the hexadecimal sequence:

7E 87 01 00 7D 5D 2F 74 7E

Example 2: Decoding an HDLC packet received from the mote

To understand how to decode an HDLC packet sent from the mote, let’s assume that the mote received a “get mote information” command, and replied with the following HDLC Packet. (All values are in hexadecimal.)

Start Byte	HDLC Packet Payload (stuffed)	FCS (stuffed)	Stop Byte
7E	8A 07 00 1F 00 00 5B 00 01 01 06 00 3C 00 00 00 00 00 00 7D 5E C3 02 00 08 30 30 30 5F 45 56 30 31 00 13 00	43 47	7E

Step 1 (HDLC layer) strip off delimiters:

HDLC Packet Payload (stuffed)	FCS (stuffed)
8A 07 00 1F 00 00 5B 00 01 01 06 00 3C 00 00 00 00 00 00 7D 5E C3 02 00 08 30 30 30 5F 45 56 30 31 00 13 00	43 47

Step 2 Remove byte stuffing.

To remove byte stuffing, check for instances of “7D 5D” or “7D 5E” and replace as follows:

7D 5D => 7D
7D 5E => 7E

HDLC Packet Payload	FCS
8A 07 00 1F 00 00 5B 00 01 01 06 00 3C 00 00 00 00 00 00 7E C3 02 00 08 30 30 30 5F 45 56 30 31 00 13 00	43 47

Step 3 Confirm FCS.

Calculate the checksum for the HDLC payload.

HDLC Packet Payload
8A 07 00 1F 00 00 5B 00 01 01 06 00 3C 00 00 00 00 00 00 7E C3 02 00 08 30 30 30 5F 45 56 30 31 00 13 00

Confirm that the FCS matches the FCS sent with the packet. Because the packet encodes FCS least significant byte first, in this example the calculated FCS should match “47 43”.

Step 4 (Application layer) parse HDLC payload content.

The resulting packet payload is as follows:

HDLC Packet Payload
8A 07 00 1F 00 00 5B 00 01 01 06 00 3C 00 00 00 00 00 00 7E C3 02 00 08 30 30 30 5F 45 56 30 31 00 13 00

Command Type	Message Content
8A	07 00 1F 00 00 5B 00 01 01 06 00 3C 00 00 00 00 00 00 7E C3 02 00 08 30 30 30 5F 45 56 30 31 00 13 00

As described in section 7.3.3.6., an 0x8A command with parameter type 0x07 has the following message content structure:

Param	Error Code	Length	Hw Model	Hw Rev	Sw Rev	MAC	Mote Type	Net ID	Datasheet ID	Mote ID	Rsvd
07	00	1F	00 00 5B	00 01	01 06 00 3C	00 00 00 00 00 00 7E C3	02	00 08	30 30 30 5F 45 56 30 31	00 13	00

Therefore, this is a Mote Information response with no errors (and a payload length of 31 bytes). The Mote information is as follows (shown for 2.4 GHz mote):

HW model =	“00091”	(00 00 5B)
HW Rev =	“001”	(00 01)
SW rev =	“1.6.60”	(01 06 00 3C)
MAC Address =	00 00 00 00 00 00 7E C3	
Mote type =	02 = 2.4 GHz	(02)
Network ID =	8	(00 08)
Datasheet ID =	“000_EV01”	(30 30 30 5F 45 56 30 31)
Mote ID =	“19”	(00 13)

8.0 Packaging Description

8.1 Mechanical Drawings

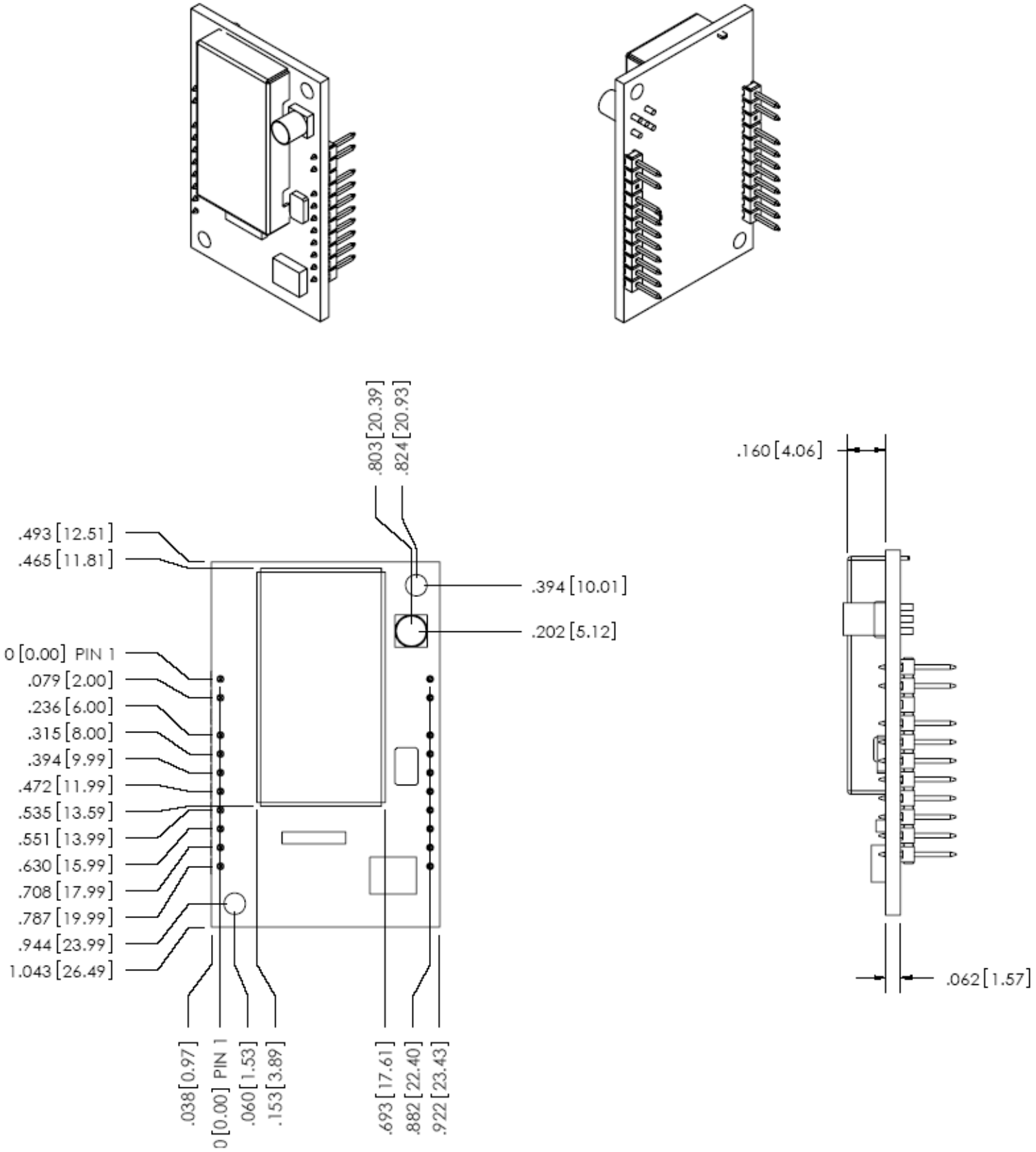

Figure 12 M2135-1/M2030-1 Mote—Mechanical Drawing

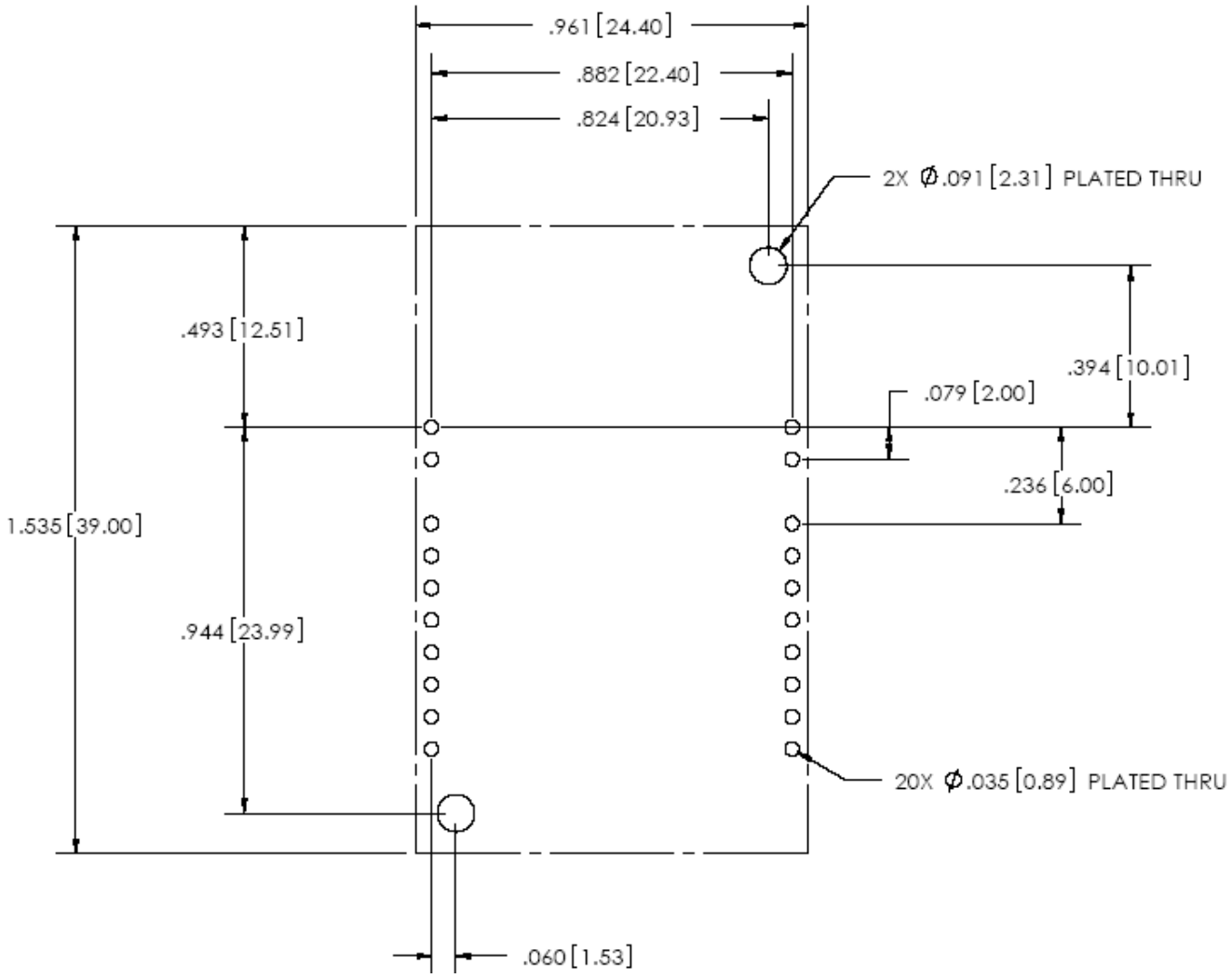

Figure 13 M2135-1/M2030-1 Mote Footprint—Mechanical drawing

8.2 Soldering Information

The M2135-1/M2030-1 can be hand soldered with a soldering iron at 270 °C. The soldering iron should be in contact with the pin for 20 seconds or less.

9.0 Regulatory and Standards Compliance

9.1 FCC Compliance

9.1.1 FCC Testing

The M2135-1/M2030-1 mote complies with Part 15.247 modular (Intention Radiator) of the FCC rules and regulations. In order to fulfill FCC certification requirements, products incorporating the M2135-1/M2030-1 mote must comply with the following:

1. An external label must be provided on the outside of the final product enclosure specifying the FCC identifier (*SJC-xxxxx-xxxx*), as described in 9.1.3 below.
2. The antenna must be electrically identical to the FCC-approved antenna specifications for the M2135-1/M2030-1 as described in 9.1.2 or the gain may be lower than specified in Table 3.
3. The device integrating the M2135-1/M2030-1 mote may not cause harmful interference, and must accept any interference received, including interference that may cause undesired operation.
4. An unintentional radiator scan must be performed on the device integrating the M2135-1/M2030-1 mote, per FCC Rules and Regulations, Title 47, Part 15, Subpart B. See FCC rules for specifics on requirements for declaration of conformity.

9.1.2 FCC-approved Antennae

The following antenna specifications shall be FCC approved for use with the M2135-1/M2030-1 mote.

Table 3 FCC-approved Antenna Specifications for the M2135-1/M2030-1

Gain	Pattern	Type	Frequency	Connector
TBD	Omni-directional	TBD	2.4–2.4835 GHz	MMCX

9.1.3 OEM Labeling Requirements

The Original Equipment Manufacturer (OEM) must ensure that FCC labeling requirements are met. The outside of the final product enclosure must have a label with the following (or similar) text specifying the FCC identifier. The FCC ID and certification code must be in Latin letters and Arabic numbers and visible without magnification.

Contains transmitter module FCC ID: *SJC-xxxxx-xxxx*

or

Contains FCC ID: *SJC-xxxxx-xxxx*.

9.2 IC Compliance

The M2135-1/M2030-1 shall be certified for modular Industry Canada (IC) approval. The OEM is responsible for its product to comply with IC ICES-003 and FCC Part 15, Sub. B – Unintentional Radiators. ICES-003 is equivalent to FCC Part 15 Sub. B and Industry Canada accepts FCC test reports or CISPR 22 test reports for compliance with ICES-003.

9.3 Industrial Environment Operation

The M2135-1/M2030-1 is designed to meet the specifications of a harsh industrial environments which includes:

- **Shock and Vibration**—The M2135-1/M2030-1 complies with high vibration pipeline testing, as specified in IEC 60770-1.
- **Hazardous Locations**—The M2135-1/M2030-1 design is consistent with operation in UL Class 1, Division 2 Hazardous Locations.
- **Temperature Extremes**—The M2135-1/M2030-1 is designed for industrial storage and operational temperature range of –40 °C to 85 °C.

10.0 Ordering Information

Product List:

M2135-1: SmartMesh-XT / Long-range 2.4 GHz Serial Mote

M2030-1: SmartMesh-XT / 2.4 GHz Serial Mote

Contact Information:

Dust Networks
30695 Huntwood Ave.
Hayward, CA 94544

Toll-Free Phone: 1 (866) 289-3878

Website: www.dustnetworks.com

Email: sales@dustnetworks.com

Waring to the OEM: The OEM is cautioned that any changes or modifications not expressly approved by the party responsible for compliance (Dust Networks, Inc.) could void the OEM's authority to operate the equipment as pursuant to FCC Rule 15.21

Trademarks

Dust Networks™, the Dust Networks logo, SmartMesh-XR™, and SmartMesh-XT™ are trademarks of Dust Networks, Inc. Dust® and SmartMesh® are registered trademarks of Dust Networks, Inc. All third-party brand and product names are the trademarks of their respective owners and are used solely for informational purposes.

Copyright

This documentation is protected by United States and international copyright and other intellectual and industrial property laws. It is solely owned by Dust Networks, Inc. and its licensors and is distributed under a restrictive license. This product, or any portion thereof, may not be used, copied, modified, reverse assembled, reverse compiled, reverse engineered, distributed, or redistributed in any form by any means without the prior written authorization of Dust Networks, Inc.

RESTRICTED RIGHTS: Use, duplication, or disclosure by the U.S. Government is subject to restrictions of FAR 52.227-14(g) (2)(6/87) and FAR 52.227-19(6/87), or DFAR 252.227-7015 (b)(6/95) and DFAR 227.7202-3(a), and any and all similar and successor legislation and regulation.

Disclaimer

This documentation is provided “as is” without warranty of any kind, either expressed or implied, including but not limited to, the implied warranties of merchantability or fitness for a particular purpose.

This documentation might include technical inaccuracies or other errors. Corrections and improvements might be incorporated in new versions of the documentation.

Dust Networks does not assume any liability arising out of the application or use of any products or services and specifically disclaims any and all liability, including without limitation consequential or incidental damages.

Dust Networks products are not designed for use in life support appliances, devices, or other systems where malfunction can reasonably be expected to result in significant personal injury to the user, or as a critical component in any life support device or system whose failure to perform can be reasonably expected to cause the failure of the life support device or system, or to affect its safety or effectiveness. Dust Networks customers using or selling these products for use in such applications do so at their own risk and agree to fully indemnify and hold Dust Networks and its officers, employees, subsidiaries, affiliates, and distributors harmless against all claims, costs, damages, and expenses, and reasonable attorney fees arising out of, directly or indirectly, any claim of personal injury or death associated with such unintended or unauthorized use, even if such claim alleges that Dust Networks was negligent regarding the design or manufacture of its products.

Dust Networks reserves the right to make corrections, modifications, enhancements, improvements, and other changes to its products or services at any time and to discontinue any product or service without notice. Customers should obtain the latest relevant information before placing orders and should verify that such information is current and complete. All products are sold subject to Dust Network's terms and conditions of sale supplied at the time of order acknowledgment or sale.

Dust Networks does not warrant or represent that any license, either express or implied, is granted under any Dust Networks patent right, copyright, mask work right, or other Dust Networks intellectual property right relating to any combination, machine, or process in which Dust Networks products or services are used. Information published by Dust Networks regarding third-party products or services does not constitute a license from Dust Networks to use such products or services or a warranty or endorsement thereof. Use of such information may require a license from a third party under the patents or other intellectual property of the third party, or a license from Dust Networks under the patents or other intellectual property of Dust Networks.

© Dust Networks, Inc. 2006. All Rights Reserved.

Document Number: 020-0004 rev 2 M2135-1/M2030-1 Datasheet
Last Revised: October 17, 2006

Document Status	Product Status	Definition
Advanced Information	Planned or under development	This datasheet contains the design specifications for product development. Dust Networks reserves the right to change specifications in any manner without notice.
Preliminary	Engineering samples and pre-production prototypes	This datasheet contains preliminary data; supplementary data will be published at a later time. Dust Networks reserves the right to make changes at any time without notice in order to improve design and supply the best possible product. The product is not fully qualified at this point.
No Identification Noted	Full production	This datasheet contains the final specifications. Dust Networks reserves the right to make changes at any time without notice in order to improve design and supply the best possible product.
Obsolete	Not in production	This datasheet contains specifications for a product that has been discontinued by Dust Networks. The datasheet is printed for reference information only.