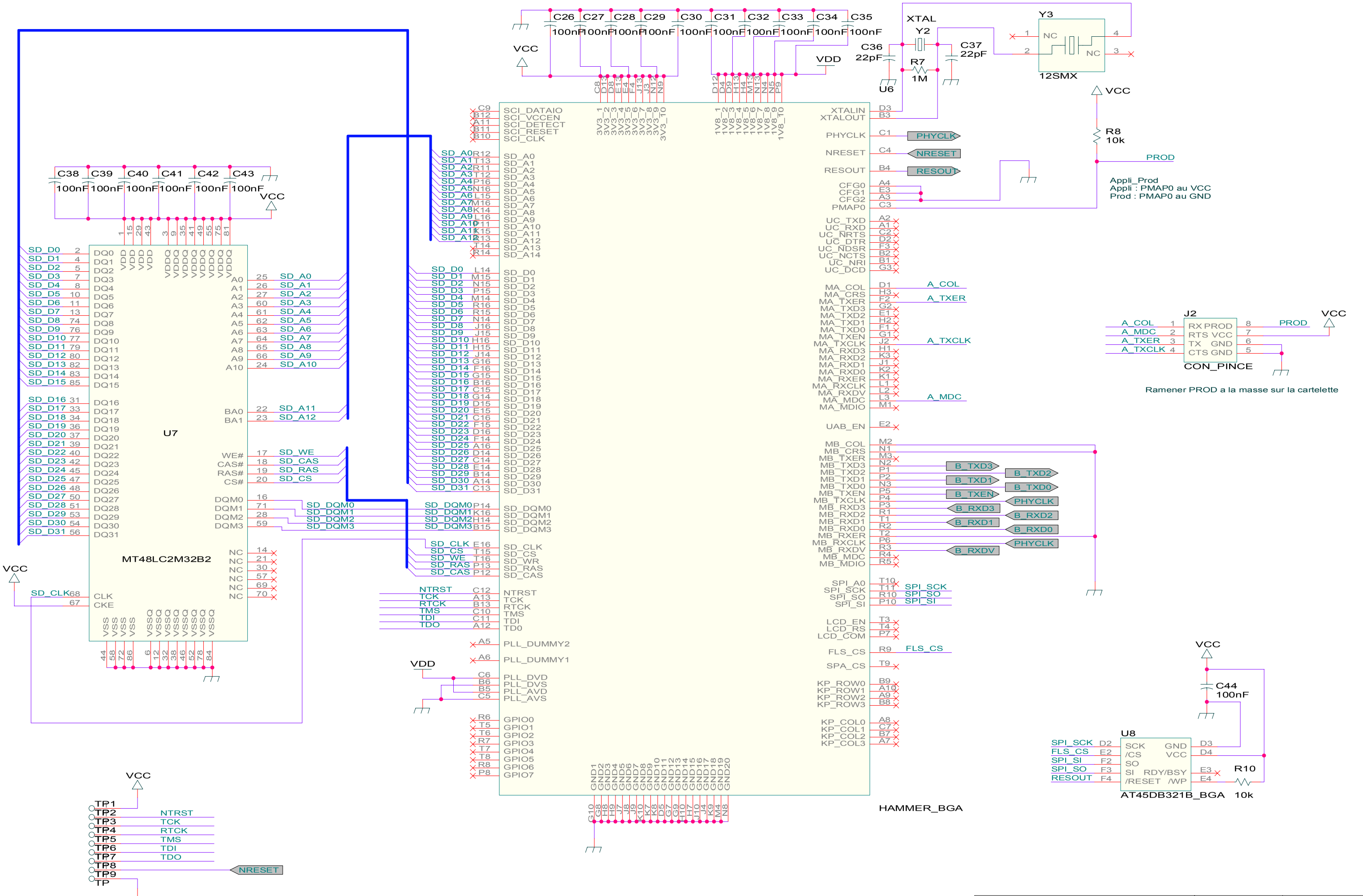
C26 C27 C28 C29 C30 C31 C32 C33 C34 C35
100nF
VCC
VDD
XTAL
Y2
Y3
NC
12SMX
C36 22pF
C37 22pF
R7 1M
U6
R8 10k
PROD
Appli_Prod
Appli : PMAP0 au VCC
Prod : PMAP0 au GND
C38 C39 C40 C41 C42 C43
U7
MT48LC2M32B2
SD_CLK
HAMMER_BGA
J2
CON_PINCE
A_COL
A_MDC
A_TXER
A_TXCLK
Ramener PROD a la masse sur la cartelette
U8
AT45DB321B_BGA
C44 100nF
R10 10k
SPI_SCK
FLS_CS
SPI_SI
SPI_SO
RESOUT
TP1
TP2 NTRST
TP3 TCK
TP4 RTCK
TP5 TMS
TP6 TDI
TP7 TDO
TP8
TP9 NRESET
TP
Title
EVB1.2 BGA P1
Size A3
No. docno.
Rev. 1.2
File p:\..\dongle usb 1-1\dongle_p1.sch
Date 2004/02/20
Time 21:05
2 of 2

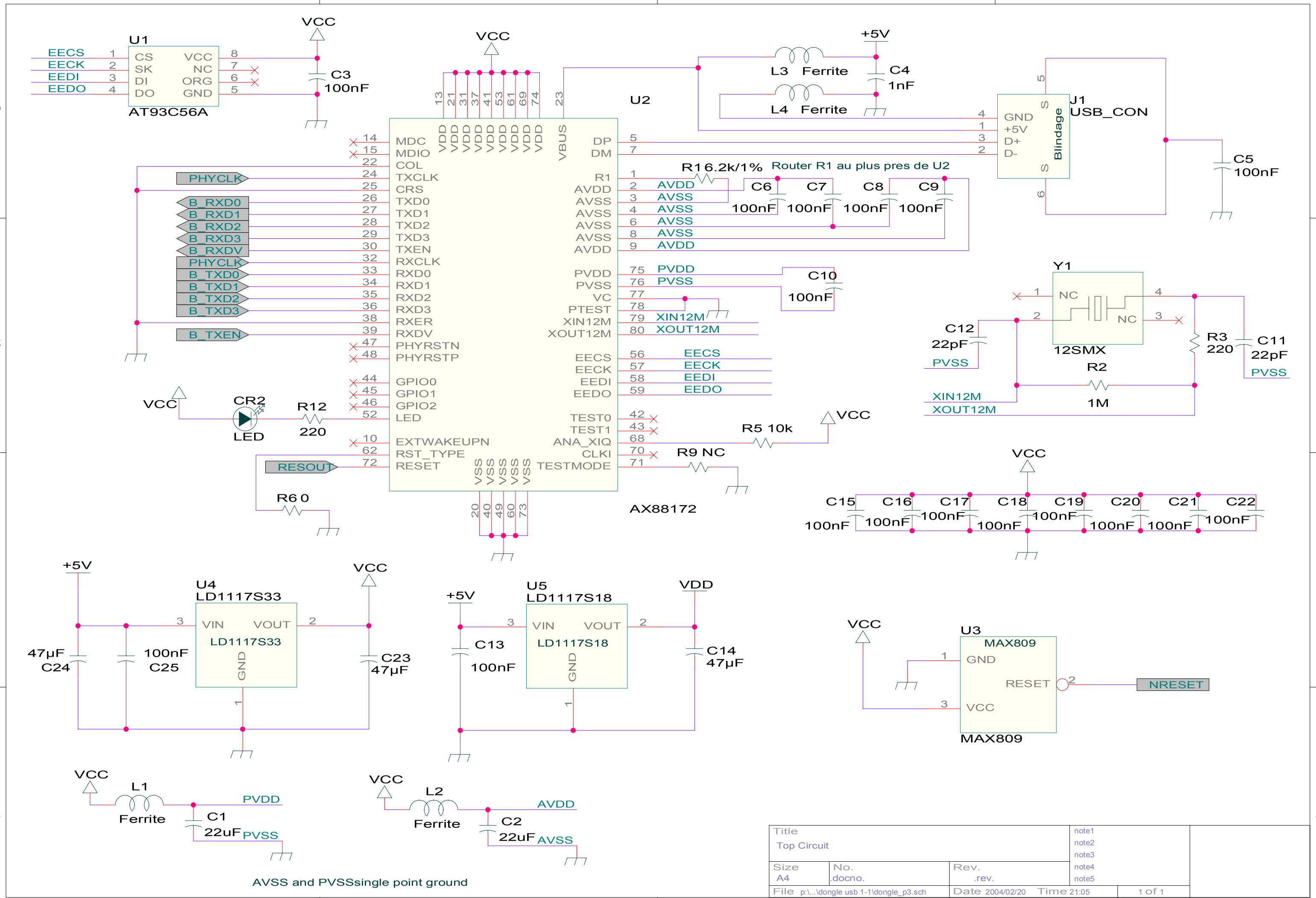
U1
AT93C56A
EECS
EECK
EEDI
EEDO
CS
SK
DI
DO
VCC
NC
ORG
GND
C3
100nF
U2
AX88172
MDC
MDIO
COL
TXCLK
CRS
TXD0
TXD1
TXD2
TXD3
TXEN
RXCLK
RXD0
RXD1
RXD2
RXD3
RXER
RXDV
PHYRSTN
PHYRSTP
GPIO0
GPIO1
GPIO2
LED
EXTWAKEUPN
RST_TYPE
RESET
VBUS
DP
DM
R1
AVDD
AVSS
PVDD
PVSS
VC
PTEST
XIN12M
XOUT12M
EECS
EECK
EEDI
EEDO
TEST0
TEST1
ANA_XIQ
CLKI
TESTMODE
VDD
VSS
PHYCLK
B_RXD0
B_RXD1
B_RXD2
B_RXD3
B_RXDV
PHYCLK
B_TXD0
B_TXD1
B_TXD2
B_TXD3
B_TXEN
RESOUT
R6 0
R16.2k/1%
Router R1 au plus pres de U2
C6
C7
C8
C9
100nF
C10
100nF
L3 Ferrite
L4 Ferrite
+5V
C4
1nF
J1
USB_CON
GND
+5V
D+
D-
Blindage
C5
100nF
Y1
12SMX
NC
C12
22pF
PVSS
R2
1M
R3
220
C11
22pF
CR2
LED
R12
220
R5 10k
R9 NC
C15
C16
C17
C18
C19
C20
C21
C22
100nF
U4
LD1117S33
VIN
VOUT
GND
47µF
C24
100nF
C25
C23
47µF
U5
LD1117S18
C13
100nF
C14
47µF
U3
MAX809
RESET
NRESET
L1
Ferrite
C1
22uF
PVSS
PVDD
L2
Ferrite
C2
22uF
AVSS
AVDD
AVSS and PVSSsingle point ground
Title
Top Circuit
Size
A4
No.
.docno.
Rev.
.rev.
File p:\...\dongle usb 1-1\dongle_p3.sch
Date 2004/02/20
Time 21:05
1 of 1
note1
note2
note3
note4
note5