FCC Part 15.247
Transmitter Certification

Frequency Hopping Spread Spectrum Transmitter

Test Report

FCC ID: SK9C3A-1L

FCC Rule Part: 15.247

ACS Report Number: 06-0013-15C

Manufacturer: Itron Electricity Metering Inc.
Trade name: CENTRON® IMAGE
Model: C3A1L

Manual

5015 B.U. Bowman Drive Buford, GA 30518 USA Voice: 770-831-8048 Fax: 770-831-8598

Itron

Knowledge to Shape Your Future

CENTRON® Polyphase Meter Technical Reference Guide

Effective Date: January 2006

DRAFT

DRAFT

Putting knowledge to work.

Proprietary Rights Notice

This manual contains the trade secrets and confidential information of Itron, Inc., which are not to be divulged to third parties and may not be reproduced or transmitted in whole or part, in any form or by any means, electronic or mechanical for any purpose, without the express written permission of Itron, Inc. All rights to designs or inventions disclosed herein, including the right to manufacture, are reserved to Itron, Inc.

The information contained in this document is subject to change without notice. Itron, Inc. reserves the right to change the product specifications at any time without incurring any obligations.

Trademarks Used in This Manual

CENTRON is a registered trademark of Itron, Inc.

Windows is a trademark of Microsoft Corporation.

DRAFT

CENTRON® Polyphase Meter Technical Reference Guide

Stock Number: 100xxxGM-01

Itron, Inc.
Corporate Headquarters
2818 North Sullivan Road
Spokane, WA 99216
U.S.A.
Tel: (509) 924-9900
Fax: (509) 891-3355

Itron, Inc.
Oconee Electricity Metering
313-B North Highway 11
West Union, SC 29696
U.S.A.
Tel: (864) 638-8300
Fax: (864) 638-4950

www.itron.com

Copyright © 2005-2006
Itron, Inc.
All rights reserved.

Compliance With FCC Regulations

FCC Part 15, Class B

This equipment has been tested and found to comply with the limits for a Class B digital device, pursuant to Part 15 of the FCC rules. These rules are designed to provide reasonable protection against harmful interference when the equipment is operated in a residential/commercial environment. This equipment generates, uses, and can radiate radio frequency energy and, if not installed and used in accordance with the instructions, may cause harmful interference to radio communications. However, there is no guarantee that interference will not occur in a particular installation. If this equipment does cause harmful interference to radio or television reception, which can be determined by turning the equipment off and on, the user is encouraged to try to correct the interference by one or more of the following measures:

- Re-orient or relocate the receiving antenna.
- Increase the separation between the equipment and the receiver.
- Connect the equipment into an outlet on a circuit different from that to which the receiver is connected.
- Consult the dealer or an experienced radio/TV technician for help. This device complies with Part 15 of the FCC rules.

THIS DEVICE COMPLIES WITH PART 15 OF THE FCC RULES. OPERATION IS SUBJECT TO THE FOLLOWING TWO CONDITIONS: (1) THIS DEVICE MAY NOT CAUSE HARMFUL INTERFERENCE, AND (2) THIS DEVICE MUST ACCEPT ANY INTERFERENCE RECEIVED, INCLUDING INTERFERENCE THAT MAY CAUSE UNDESIRED OPERATION.

FCC Part 15, Subpart C

When equipped with a radio transmitter option, this equipment has been tested and found to comply with the limits for an intentional radiator, pursuant to Part 15, Subpart C of the FCC Rules. This equipment generates, uses, and can radiate radio frequency energy. If not installed and used in accordance with the instructions, it may cause interference to radio communications.

The limits are designed to provide reasonable protection against such interference in a residential situation. However, there is no guarantee that interference will not occur in a particular installation. If this equipment does cause interference to radio or television reception. which can be determined by turning the equipment on and off, the user is encouraged to try to correct the interference by one of more of the following measures:

- Reorient or relocate the receiving antenna of the affected radio or television.
- Increase the separation between the equipment and the affected receiver.
- Connect the equipment and the affected receiver to power outlets on separate circuits.
- Consult the dealer or an experienced radio/TV technician for help.

Changes or modifications not expressly approved by Itron, Inc. could void the user's authority to operate the equipment.

DRAFT

RF Exposure Information

This equipment complies with the FCC RF radiation requirements for uncontrolled environments. To maintain compliance with these requirements, the antenna and any radiating elements should be installed to ensure that a minimum separation distance of 20 cm is maintained from the general population.

Canadian Interference Causing Equipment Regulations

This Class B digital apparatus meets all requirements of the Canadian Interference Causing Equipment Regulations. Operation is subject to the following two conditions: (1) this device may not cause harmful interference, and (2) this device must accept any interference received, including interference that may cause undesired operation.

Cet appareillage numérique de la classe B répond à toutes les exigences de l'interférence Canadienne causant des règlements d'équipement. L'opération est sujette aux deux conditions suivantes: (1) ce dispositif peut ne pas causer l'interférence nocive, et (2) ce dispositif doit accepter n'importe quelle interférence reçue, y compris l'interférence qui peut causer l'opération peu désirée.

Factory Repair of Meters

Itron recommends that all repairs be performed at the factory. Certain repairs may be performed by the user; however, unauthorized repairs will void any existing warranty. All surface mounted parts must be replaced by the factory.

Repair of Meters Under Warranty

If the meter is under warranty, then Itron, Inc. will repair the meter at no charge if the meter has failed due to components or workmanship. A return authorization number must be obtained before the equipment can be sent back to the factory. Contact your Itron Sales Representative for assistance.

Repair of Meters Not Under Warranty

The same procedure as above applies. Itron will charge for the necessary repairs based on the failure.

Service Return Address

Itron, Inc.
Customer Repair Department
313 North Highway 11 Dock C
West Union, SC 29696

DRAFT

Recycling Information

The product you have purchased contains a battery (or batteries), circuit boards, and switches. The batteries are recyclable. At the end of the meter's useful life, under various state and local laws, it may be illegal to dispose of certain components into the municipal waste system. Check with your local solid waste officials for details about recycling options or proper disposal.

Although polycarbonate is not a commonly recycled plastic, the recycling number for the polycarbonate inner cover, outer cover, and base is seven (7).

DRAFT

Table of Contents

Proprietary Rights Notice ii

Trademarks Used in This Manual ii
Compliance With FCC Regulations iii
FCC Part 15, Class B iii
FCC Part 15, Subpart C iii
RF Exposure Information iv
Canadian Interference Causing Equipment Regulations iv
Factory Repair of Meters iv
Repair of Meters Under Warranty iv
Repair of Meters Not Under Warranty iv
Service Return Address iv
Recycling Information v

Chapter 1 General Information 1

About This Manual 1
General Description 2
Physical Description 2
Meter Base 2
Personality Modules 3
Product Availability 4
Outputs 4
Display Functions 4
Specifications 4
Electrical 4
Operating Environment 5
Characteristic Data 5
Technical Data 5
Dimensions 6

Chapter 2 Installation 7

Inspection 7
Storage 7
Unpacking 7
Selecting a Site 7
Installing the Meter into Service 8
Retrofitting with Personality Modules 8

Chapter 3 Operation: Base Metrology 13

Metrology 13
Surge Protection 14
Sampling 14
Voltage and Current Measurement 15

Chapter 4 Operation: CP1S Version 17

Physical Description 18

DRAFT

Registers 18
Kilowatt Hours 18
Resetting Values 19
LCD Display Function 19
Non-Detented Register 20
Detented Register 20
Net Register 20
Segment Check 21
Factory Programming Options 21
Testing, Troubleshooting and Maintenance 22

Chapter 5 Operation: CP1SR Version 23

Standard Consumption Message (SCM) 24
Interval Data Message (IDM) 24
Physical Description 25
Registers 25
Display 25
Electronic Detent 26
Net Metering 27
Resetting Values 27
Transmission Scheme 27
FCC Regulations 28
Tamper Detection 28
Testing the CENTRON CP1SR Tamper Counter 28
SCM Testing 28
Retrofitting the CP1SR Personality Module 29
Testing, Troubleshooting and Maintenance 30

Chapter 6 Operation: CP1SD/T/L Version 31

Controls and Indicators 31
Demand Reset Button 32
Infrared Test LED 32
Liquid Crystal Display (LCD) 32
Power Flow 33
Load Emulator 34
Power Circle Quadrants 36
Magnetic Switch 36
Optical Port 36
Test Mode Button 37
Factory Reset 37
Application of Power and Power-up 37
Power Down Procedures 38
Demand Meter 38
TOU/Load Profile Meters 38
Cold Load Pickup 38
Interval Make-up 39
Operating Modes 39
Normal Mode 39
Test Mode 39
Test Mode Timeout 40
Test Mode Lockout 40
Display Modes 40

DRAFT

Energy Data Display Items 41
Demand Data Display Items 41
Instantaneous Data Display Items 42
Informational Data Display Items 42
Magnetic Switch 44
Scroll Lock 44
Changing Display Modes 44
Mode Timeout 44
Normal Display Mode 44
Alternate Display Mode 45
Toolbox Display Mode 45
Test Display Mode 46
Test Alternate Display Mode 47
Diagnostic Displays 47
Registers 47
Energy Registers 47
Demand Registers 48
Instantaneous Registers 49
Self Read and Snapshot Registers 49
Information Registers 49
Interrogation and Programming 49
Interrogation 49
Programming 50
Time-of-Use (TOU) 50
TOU Schedules 50
Calendar Schedule 50
Rates 50
Daily Patterns 51
Day Types 51
Seasonal Schedules 51
TOU Registers 51
Current Season Registers 51
Last Season Registers 51
TOU Operation 51
Rate Annunciators and Active Rate Indicators 52
Season Change 52
Battery Carryover 52
Load Profile 53
Load Profile Specifications 53
Capacity 53
Bit Resolution 53
Interval Lengths 54
Power Outage 54
Channel Configuration 54
Pulse Constants 54
Data Storage 55
Recording Duration 56
Event Log 56
Security Codes 58
Implementing Security Codes 59
Clearing Security Codes 59
Firmware Upgrades 60
Installing D/T/L Register Firmware on the PC 60
R300 Series 60
SiteScan On-Site Monitoring System 61

DRAFT

SiteScan Meter Self-Diagnostic Checks 62
SiteScan Toolbox Mode 62
SiteScan System and Installation Diagnostic Checks 66
SiteScan Diagnostic #1 72
Current Angle Tolerance 72
Cross-Phase, Polarity, and Energy Flow Check 72
SiteScan Diagnostic #2 74
Phase Voltage Deviation Check 75
SiteScan Diagnostic #3 76
Inactive Phase Current Check 76
SiteScan Diagnostic #4 78
Low End Threshold Current 78
Phase Angle Displacement Check 78
SiteScan Diagnostic #5 80
Current Waveform Distortion Check 81
SiteScan Diagnostic #6 81
Diagnostic #6 Error Example 81
Testing, Troubleshooting, and Maintenance 82
Visual Indicators 82
Infrared Test LED 82
Annunciators 82
Load Indication/Direction Annunciator 83
Phase-Voltage Indication Annunciators 83
Nominal Voltage Indication Annunciator 84
Test Mode Annunciator 84
Energy Testing 84
Testing With the Infrared Test LED 84
Testing Using the Load Indication Annunciator 85
Testing Using the Energy/Time Method 85
Recommended Energy Testing Procedures 85
Test Description 85
Recommendations 86
Demand Testing 87
Demand Test Method 88
Demand Calculations 89
Field Testing 90
Required Hardware 90
Test Method Using Infrared Pulse Adapter 90
Test Method Using a Snap Switch Assembly 90
Troubleshooting 91
Fatal Errors 91
Non-Fatal Errors 92
Other Problems 95
Maintenance 97
Preventive Maintenance 97
Corrective Maintenance 97

Glossary of Terms 99

Index 101

DRAFT

Table of Figures

Figure 1: CENTRON Polyphase Meter Metrology 3
Figure 2: CENTRON Personality Module Assembly 3
Figure 3: Dimensions 6
Figure 4: Removing the Board-to-Board Connector 9
Figure 5: Circuit Board Notches 10
Figure 6: Board-to-Board Connector, Bottom 10
Figure 7: Board-to-Board Connector, Top 11
Figure 8: CENTRON Polyphase Metrology 13
Figure 9: Sampled Waveform 14
Figure 10: Voltage and Current Measurement 15
Figure 11: CP1S LCD Personality Module 17
Figure 12: ZRO-C2A Resetter Connected to the CENTRON 19
Figure 13: Non-Detented Register (kWhd + kWhr) 20
Figure 14: Delivered kWh with Detent Enabled (kWhd) 20
Figure 15: Net kWh (kWhd - kWhr) 20
Figure 16: Segment Check 21
Figure 17: CENTRON CP1SR Meter 23
Figure 18: CP1SR LCD 25
Figure 19: CENTRON-IDM High Power SCM/IDM Transmission Scheme 27
Figure 20: CP1SR FCC Label Location 29
Figure 21: CENTRON Polyphase Meter LCD 32
Figure 22: Load Emulator Segment Progression for Delivered Power 34
Figure 23: Load Emulator Segment Progression for Received Power 35
Figure 24: Power Circle Diagram 36
Figure 25: Toolbox Phase Notation for Form 9S and 16S CENTRON Polyphase Meters 63
Figure 26: Plot of Toolbox Display Mode 64
Figure 27: Form 9S CENTRON Polyphase Meter 4-Wire Delta Phasor Diagram 68
Figure 28: Form 9S CENTRON Polyphase Meter 4-Wire Wye Phasor Diagram 69
Figure 29: Form 16S CENTRON Polyphase Meter 4-Wire Delta Phasor Diagram 70
Figure 30: Form 16S CENTRON Polyphase Meter 4-Wire Wye Phasor Diagram 71
Figure 31: Diagnostic #1 Error Diagram 74
Figure 32: Envelope Example 79
Figure 33: Phasor Diagram 80
Figure 34: Load Emulator Segment Progression 83
Figure 35: Test Connections 88

DRAFT

CHAPTER 1

General Information

In This Chapter

About This Manual 1
General Description 2
Physical Description 2
Product Availability 4
Display Functions 4
Specifications 4

This technical reference guide explains the installation, operation, and maintenance of the Itron CENTRON Polyphase meter family. Itron urges you to read the entire manual before attempting installation, testing, operation, or maintenance of a meter. To operate the Itron PC-PRO+ Advanced Programming Software and the PRO-READ handheld reader programmer discussed in this manual, refer to their respective user manuals.

About This Manual

This manual contains the following information as listed in the chapter descriptions below:

General Information	Provides a general description, operation, physical and functional descriptions, and complete CENTRON Polyphase meter specifications.
Installation	Gives instructions for the proper handling and installation.
Operation: CP1S	Provides a physical description and operational characteristics of the CP1S watthour (kWh) only meter.
Operation: CP1SR	Provides a physical description and the operational characteristics of the CP1SR R300 900 MHz radio frequency personality module.
Operation: CP1SD, CP1ST, and CP1SL	Provides detailed information and theoretical operation for Demand (CP1SD), Time-of-Use (CP1ST), and Load Profile (CP1SL) versions. Gives step-by-step procedures for accessing the three operational modes and associated displays.
Testing, Troubleshooting, and Maintenance	Provides an explanation of the testing, troubleshooting, and maintenance of the CENTRON Polyphase meter.
Specification Numbers and Drawings	Provides a reference to meter part numbers and shows meter form drawings.

DRAFT

General Description

The CENTRON meter family is a solid-state, polyphase meter used for measuring electrical energy consumption. The CENTRON incorporates a two-piece design combining a base metrology with a variety of personality modules that snap on the standard meter base. Utilizing the Hall Effect technology for accurate power measurement, the metrology portion of the meter contains all measurement circuitry and calibration information, while the personality modules contain the register functionality and communication mediums.

Each version of the meter is distinguished by the various personality modules that mount to the standard meter metrology base. The personality modules available include the following versions:

- Energy only—CP1S (LCD)
- Energy only with radio frequency AMR—CP1SR
- Demand/TOU/LP—CP1SD/T/L
- Demand/TOU/LP & RF—CP1SR2/R3

Need new picture

Physical Description

The CENTRON Polyphase meter features a common meter base to which various personality modules are attached. The cover is polycarbonate.

Meter Base

The CENTRON Polyphase meter base contains all of the measurement circuitry and calibration information on the metrology board.

The meter base assembly includes three current conductors, three flux-directing cores, three Hall Effect devices, the metrology circuit board, and the ultrasonically welded module support. The base also contains three metal oxide varistors (MOV), which are used to protect the meter from line surges.

DRAFT

Meter bases are built specific to the metering form and are available in Form 9S CL20 and Form 16S CL200 configurations. All meter forms are auto-voltage ranging from 120 to 480 volts. An example of the metrology is shown below.

Figure 1: CENTRON Polyphase Meter Metrology

Personality Modules

All of the personality modules in the CENTRON Polyphase meter family snap into the module holder located on the standard meter base as shown below. From the base metrology, the energy data is transmitted to the personality modules, which contain the meter display, communication mediums, and register functionality.

Figure 2: CENTRON Personality Module Assembly

Product Availability

The current offerings for the CENTRON are:

Metrology	Class 20, 120-480V, Form 9S
	Class 200, 120-480V, Form 16S
Personality Modules	CP1S—LCD (5x1 or 4x10)
	CP1SR—R300C (Radio Frequency)
	CP1SD/T/L—Demand/TOU/LP
	CP1SR2/R3—R300CD/R300CD3

Outputs

The CP1SD, CP1ST, and CP1SL personality modules are available input/output-ready (I/O-ready). These modules contain circuitry that allows future functionality expansion through I/O modules.

Display Functions

The CP1S and CP1SR modules can display kWh readings in either a 5x1 or 4x10 configuration.

Specifications

Electrical

Voltage Rating	120 - 480V
Operating Voltage	± 20% (60 Hz); ± 10% (50 Hz)
Frequency	60 Hz, 50 Hz
Operating Range	± 3 Hz

DRAFT

Operating Environment

Temperature	-40°C to +85°C
Humidity	0% to 95% non-condensing
Accuracy	± 0.2% @ unity power factor
	± 0.3% @ 50% power factor
Transient/Surge Suppression	ANSI C37.90.1 - 1989
	IEC 61000-4-4
	ANSI C62.45 - 1992

Characteristic Data

Temperature Rise	Meets ANSI C12.1 Section 4.7.2.9

Technical Data

Meets applicable standards:

- ANSI C12.1 - 2001
- ANSI C12.16 (Solid State Meters)
- ANSI C12.18 (Optical Communications Protocol)
- ANSI C12.19 - 2001
- ANSI C12.20 (Class 0.2) - 2002
- IEC 61000-4-4
- IEC 61000-4-2

DRAFT

Dimensions

The following dimensional measurements are shown in inches and (centimeters).

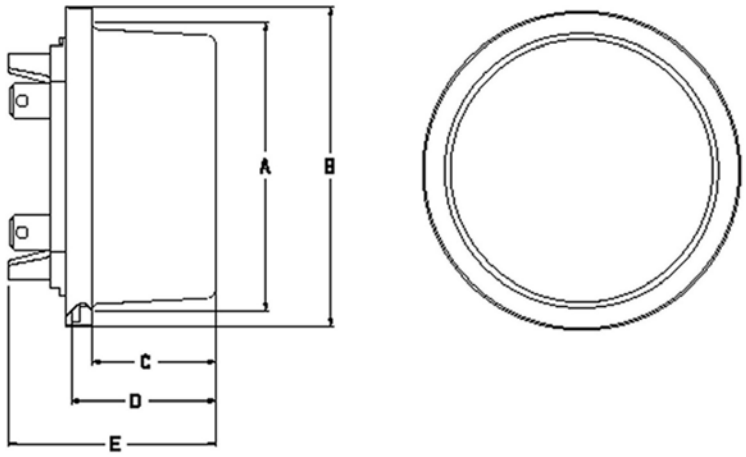

Figure 3: Dimensions

A	B	C	D	E
Polycarbonate				
6.29 (16.00)	6.95 (17.70)	2.70 (6.90)	3.16 (8.00)	4.53 (11.50)

DRAFT

CHAPTER 2

Installation

In This Chapter

Inspection 7
Storage.....7
Unpacking.....7
Selecting a Site 7
Installing the Meter into Service.....8
Retrofitting with Personality Modules.....8

Inspection

Perform the following inspections when you receive the meter:

- Inspect for obvious damage to the cover, base, and meter assembly.
- Compare the meter and register nameplates to the record card and invoice. Verify the type, class, voltage, form number, and other pertinent data.
- Save the original packing materials.

Storage

Store the meter in a clean, dry (Relative Humidity < 50%) environment between -40° C to +85° C (-40° F to +185° F). Avoid prolonged storage (more than one year) at temperatures above +70° C(+158° F). Store the meter in the original packing material.

Unpacking

As with all precision electronic instruments, the meter should be handled with care in an outdoor environment. Follow these precautions when handling the meter:

- Avoid damaging the meter base, cover, reset mechanism (if supplied), and optical connector (if supplied).
- When handling personality modules, grip the circuit board by its edges. Do not touch the liquid crystal display.

Selecting a Site

The meter is designed and manufactured to be installed in an outdoor environment, at operating temperature ranges between -40° C and +85° C (-40° F to +185° F). Operation in moderate temperatures increases reliability and product life.

DRAFT

Installing the Meter into Service

Install the meter base using standard meter installation practices.

The current and potential terminals extend as blades, or bayonets, from the back of the meter. The meter is plugged into the socket so that the bayonets engage the main socket jaws that connect to the service lines. Clamping pressure on the bayonets is provided by the heavy spring pressure of the socket jaws. In some heavy-duty sockets, jaw clamping pressure is provided by a handle or wrench.

On meters equipped with LCD displays, verify register operations by observing the display:

- LCD displays the correct number of digits (4 or 5).
- If the register only displays a Segment Test (all display items shown) and flashes "**norDisplay**" or "**3BReset**", then the register has not been programmed.
- Verify that no errors are displayed.

Retrofitting with Personality Modules

CENTRON meters can be upgraded to increase functionality by changing the Personality Modules.

Do not power ON the meter without the inner cover in place. Power the meter OFF before removing the inner cover. Personality modules are sensitive to ESD damage. Take appropriate grounding measures before retrofitting!

To change or add a Personality Module:

1. Remove power from the meter.
2. Remove the outer cover.
3. Remove plastic inner cover by holding the meter with both hands and applying equal pressure on either side of the three and nine-o'clock positions. The inner cover is held in place by four plastic tabs on the meter base.

DRAFT

4 Remove the black board-to-board connector (① in the figure below) between the circuit board and the metrology board by pulling it by its middle while moving it side-to-side. To maintain the integrity of the connector, only remove it when you are upgrading the meter.

Figure 4: Removing the Board-to-Board Connector

5 Remove the register module, one side at a time, by pulling gently outward on the meter frame snaps (② in the figure above) while lifting the module up.

6 Snap the new module into the meter frame by aligning the notches at bottom of the circuit board with the lower two snaps.

The module must be aligned properly in the snaps to avoid damaging the connector or circuit board.

DRAFT

7 Replace the board-to-board connector by aligning the top of the connector with the notches in the circuit board and pressing gently at the bottom of connector to mate the connector to metrology board. Then, gently press the top of the connector to mate it to the register module. The connector is seated correctly when you hear it snap into place.

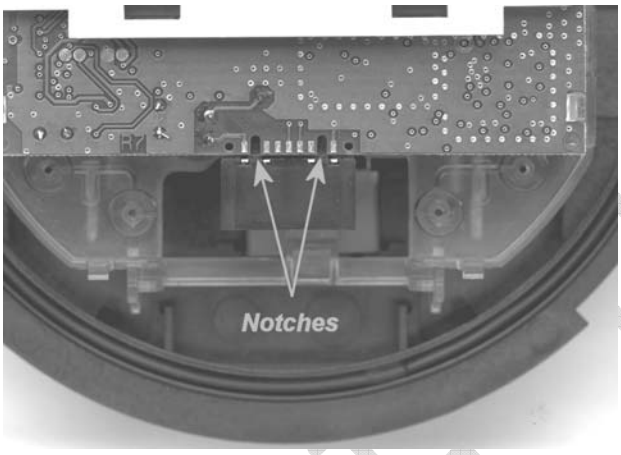

Figure 5: Circuit Board Notches

Be sure to use the meter base for leverage instead of the LCD holder. Pressure on the LCD holder may damage the personality module.

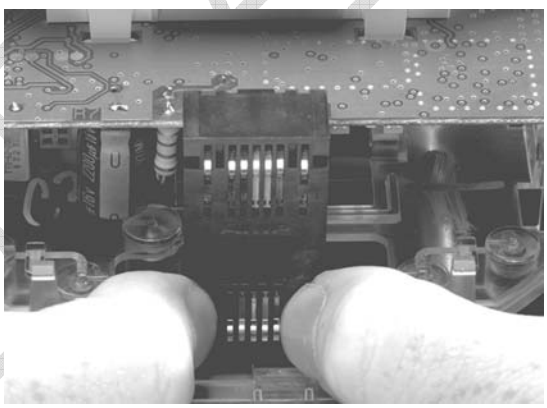

Figure 6: Board-to-Board Connector, Bottom

DRAFT

8 Ensure the board-to-board connector is fully seated by pressing firmly in on the middle of the connector.

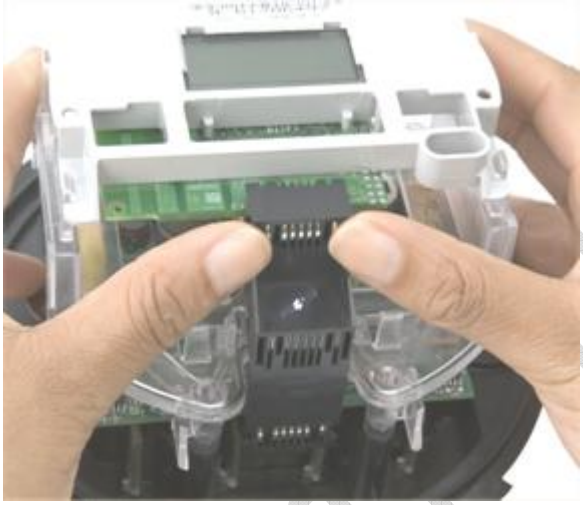

Figure 7: Board-to-Board Connector, Top

9 Carefully replace the inner protective cover. Engage the top snaps first, taking care to place the slot at the top of the cover over the IR light pipe. Failure to do so could break the light pipe. Ensure that all four meter base tabs are engaged with the slots at the top and bottom of the inner cover.

10 Place the cover over the meter base until the flange on the cover is flush with the flange on the meter base.

11 Turn the cover clockwise until the locking tabs are fully engaged with the meter base.

DRAFT

CHAPTER 3

Operation: Base Metrology

In This Chapter

Metrology 13
Surge Protection 14
Sampling.....14
Voltage and Current Measurement.....15

Metrology

The CENTRON Polyphase meter is a solid-state meter which uses the Hall Effect (one per phase) to measure metered current and voltage dividers (one per phase) to measure metered voltage as indicated in block diagram below.

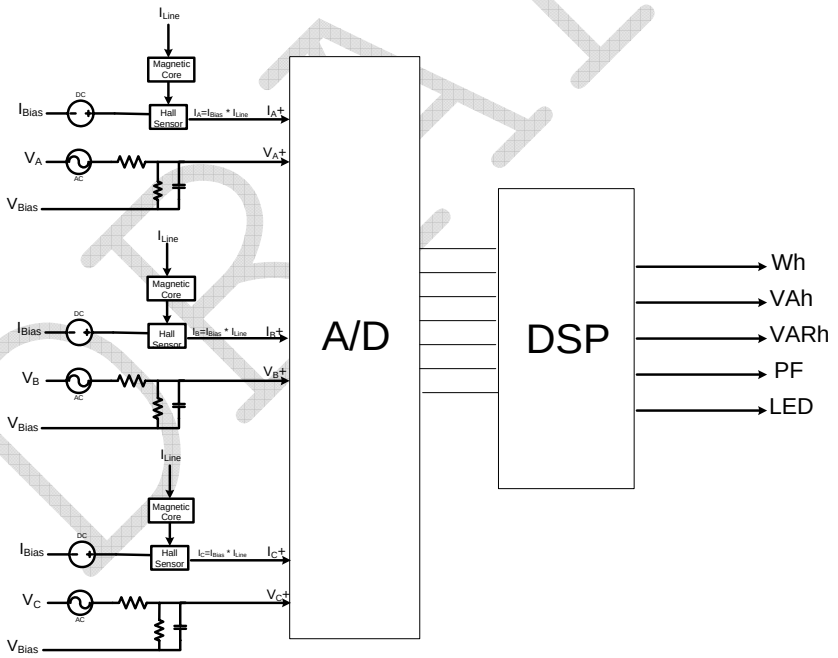

Figure 8: CENTRON Polyphase Metrology

The metrology performs the direct sampling of the voltage and current waveforms and the raw processing of these samples to compute all the energy quantities. It is comprised of a dedicated microprocessor and an analog-to-digital (A/D) converter. Low level signals proportional to the service voltages and currents are connected to the analog inputs of the A/D converters. These converters, which are contained in one package, individually sample the signals and send the digital results to the microprocessor 1,920 times per second. The microprocessor takes these samples, applies precision calibration corrections and computes all the quantities required for the specific meter configuration.

Surge Protection

Surge protection for the electronics in the CENTRON POLYPHASE meter is provided by Metal Oxide Varistors (MOVs). MOVs are clamping devices that allow voltage up to a limit, and then increasingly conduct current to prevent the voltage from exceeding

the limit. The MOVs on the power supply board are connected directly across the voltage inputs to the meter. Although this approach requires very large MOVs, it prevents high voltages from appearing on or near the electronic boards giving the CENTRON POLYPHASE meter superior performance when exposed to extremely high-voltage surges.

Sampling

The analog-to-digital converter samples each phase voltage and current signal 32 times per line cycle and sends the digital values immediately to the microprocessor. This amounts to 32 samples per cycle at 60 Hz. Each time a new set of digital samples are received by the microprocessor, it calculates all of the selected metrological quantities.

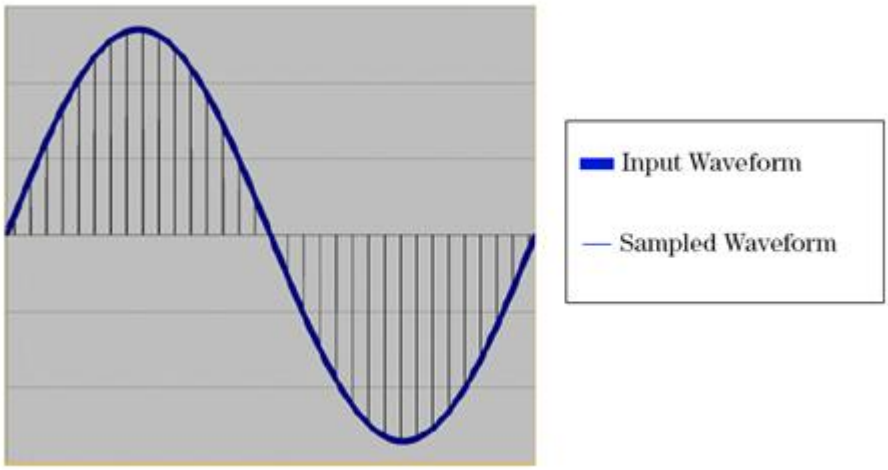

Figure 9: Sampled Waveform

At this sampling rate, harmonics to the 15th are measured. The high rate of the sampling enables the CENTRON POLYPHASE meter to measure energy quantities accurately under high harmonic distortion conditions. The sampling continues uninterrupted as long as the meter is powered up. All other processing is done in the background between samples. From the continuous train of digital samples on each of the six channels, current, voltage, active energy, reactive energy, and apparent energy quantities are computed.

Voltage and Current Measurement

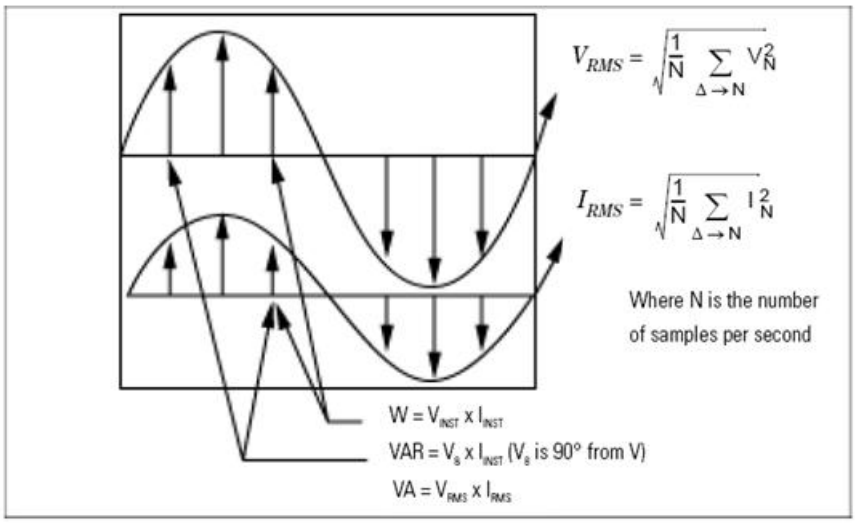

Figure 10: Voltage and Current Measurement

DRAFT

CHAPTER 4

Operation: CP1S Version

In This Chapter

Physical Description 18
Registers 18
LCD Display Function 19
Testing, Troubleshooting and Maintenance 22

The kWh only version of the CENTRON Polyphase meter is available with an LCD personality module to register energy accumulation.

Figure 11: CP1S LCD Personality Module

The LCD module may be ordered with a 5x1 or 4x10 register for self-contained meters, and a 5xTR or 4xTR register for transformer-rated meters.

The kWh only version of the CENTRON Polyphase meter not only provides very accurate measurement for energy accumulation for today's needs, but also provides a platform for easy upgrade to higher functionality in the future.

Physical Description

The CENTRON Polyphase meter Personality Modules snap into the meter register mounting brackets to ease installation of the board.

The LCD module is connected to the metrology board using the board-to-board connector. The following information is sent to the LCD module from the metrology board:

- Reference voltages
- Energy data
- Basic status information

A connector is located at the 12 o'clock position behind the LCD for resetting the energy register. This is done using the ZRO-C2A Resetter.

Need new photo

Registers

Kilowatt Hours

The modules display energy in increments of whole values of kWh. Standard operation for all modules is to add forward and reverse energy flow. Therefore, if the meter is inverted, the registers will accumulate in the forward direction, thus providing uni-directional operation. At the time of order, the LCD module can be selected to have a detent register. Programmed at the factory, this feature will cease registration while the meter is inverted, or power flow is otherwise reversed. The module can also be selected to have a net register. This feature is factory programmable and will subtract registration while the meter is inverted, or power flow is otherwise reversed.

DRAFT

Resetting Values

The ZRO-C2A resets the energy register through a direct connection to the connector at the 12 o'clock position on the LCD and R300 modules.

Figure 12: ZRO-C2A Resetter Connected to the CENTRON

The ZRO-C2A is a pocket-sized handheld device for resetting the electronic meter readings in the CENTRON Polyphase LCD kWh meter (CP1S) and the R300 meter (CP1SR). The ZRO-C2A also resets the tamper indicators in the CP1SR.

The ZRO-C2A requires that the meter **Not Be Powered**. Wait three (3) seconds after power removal to install the probe to ensure the meter has had sufficient time to power down. The device connects to the CENTRON Polyphase meter through a hole in the plastic inner cover located at the 12 o'clock position on the meter. Extending from the ZRO-C2A is a cable terminating in a connector which mates to the programming connector of the CENTRON.

LCD Display Function

The following sections describe the LCD for the CENTRON Polyphase meter.

The LCD module is shown below. This display uses five 7-segment digits, three icons to indicate the type of displayed data, three icons to represent a watt disk emulator, and three icons for voltage indication. The display may be configured for either four or five digits and will roll over at 100,000 kWh.

This module is compatible with the ZRO-C2A Resetter.

Need new photo

DRAFT

Non-Detented Register

The Non-Detented Register displays the delivered energy plus received energy.

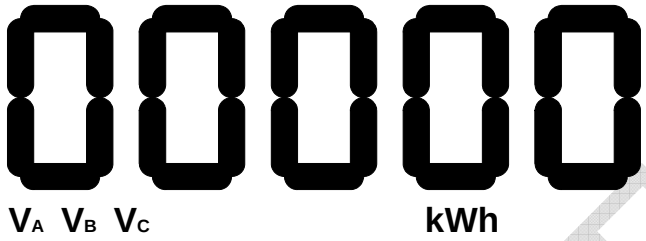

Figure 13: Non-Detented Register (kWhd + kWhr)

Detented Register

The Detented Register addresses applications requiring the reading of delivered kWh only. Received energy is discarded.

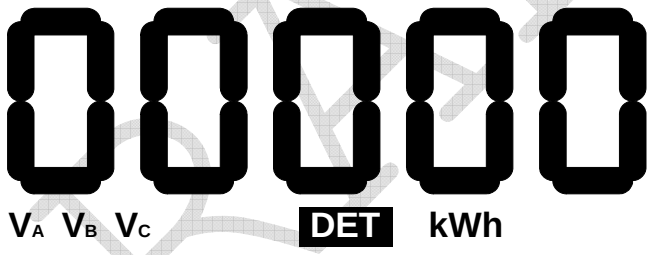

Figure 14: Delivered kWh with Detent Enabled (kWhd)

Net Register

The Net (kWh) Register addresses applications requiring residential net metering points. Net kWh is the delivered kWh to the customer minus any received kWh from the customer.

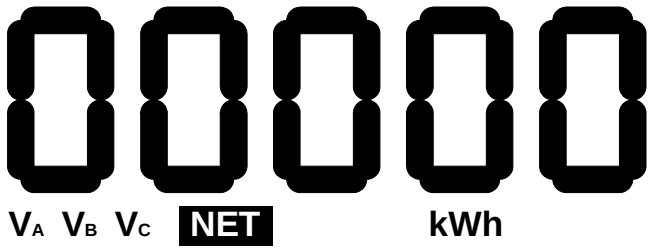

Figure 15: Net kWh (kWhd - kWhr)

DRAFT

Segment Check

The Segment Check Register addresses applications requiring display scrolling between kWh and a full segment check. See Display Timing **(on page 21)** for factory programming options.

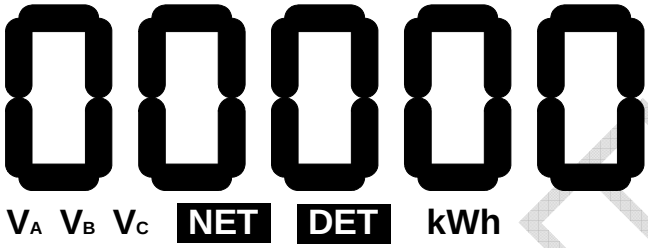

Figure 16: Segment Check

Factory Programming Options

Display Timing

The display will scroll between the billing register and the segment check mode based on the factory programming option.

Option	Description
1	7 second billing register display, 1 second blank, 7 second segment check display (7/7)
2	7 second billing register display, 1 second blank, 1 second segment check display (7/1)
3	Only the billing register is displayed (7/0)

Digits and Multipliers

The following digit and multiplier settings are available for factory programming:

- 4 digits x 1 kWh
- 4 digits x 10 kWh
- 5 digits x 1 kWh

DRAFT

Testing, Troubleshooting and Maintenance

Diagnostic	Display OFF Period	Notes
Metrology message stopped for greater than 15 seconds and less than 10 minutes	Error	Missing message with diagnostic flag also written to the memory
Power up with Phase A, B, and C voltage equal to 0 degrees	noSEr	

DRAFT

CHAPTER 5

Operation: CP1SR Version

In This Chapter

Standard Consumption Message (SCM).....24
Interval Data Message (IDM).....24
Physical Description.....25
Registers.....25
Transmission Scheme.....27
Tamper Detection.....28
Retrofitting the CP1SR Personality Module.....29
Testing, Troubleshooting and Maintenance.....30

The CP1SR module is a one-way, unlicensed radio frequency (RF) personality module that attaches to the CENTRON Polyphase meter base (See the figure below). It offers a cost-effective solution for the endpoints in automatic and off-site meter reading applications.

Figure 17: CENTRON CP1SR Meter

Standard Consumption Message (SCM)

Utilizing the 96-bit Itron Standard Consumption Message protocol (SCM), the CP1SR provides the energy (kWh) consumption, module ID number, tamper indications, meter type, and error checking information in each radio frequency transmission. Within the 96-bit SCM, 26 bits are allocated to the module ID number for meter identification (also referred to as ERT ID number).

The CP1SR uses frequency hopping and transmits within the unlicensed 910 to 920 MHz band on an average of once per second. In order to avoid interference from other devices, the transmission frequencies and time interval between transmission cycles are completely random in nature.

The CP1SR is factory programmed with tuning information, module ID, tamper indicators (ITPR and RTPR), meter type, energy consumption, and scaling factor. The program and all register information are stored in non-volatile memory in the event of a power outage. Upon power restoration, all of the information in the non-volatile memory is restored to the appropriate registers.

The ERT type 7 message indicates that the device is sending this message supports transmitting a single SCM in the XXXXX format.

Interval Data Message (IDM)

The ERT type 7 SCM and an ERT type 24 IDM message indicates that the device sending this message supports transmitting a single SCM with an XXXXX.XX format. The type 24 ERT indicates that it is an IDM message.

The RF Personality Module allows meter data to be collected automatically, helping to save time, improve reliability, increase accuracy, and ensure data security.

The R300 IDM is a RF Personality Module based on the CENTRON Polyphase solid-state metering platform. Kilowatt-hours and tamper data are reported through RF transmissions. The R300 IDM module provides both baseline and advanced data collection functionality, including interval data recording and enhanced tamper reporting capability. The R300 IDM delivers the Standard Consumption Message to any of Itron’s radio-based data collection technologies, including handheld computers (OMR), a vehicle-based Mobile AMR unit such as the Mobile Collector, or a network data collection solution such as the Itron Fixed Network or MicroNetwork. In addition, the R300 IDM is also capable of delivering the Interval Data Message to the Itron Fixed Network AMR system to calculate ANSI standard demand, time-of-use, and load profiling information.

DRAFT

Physical Description

The CP1SR personality module is constructed of a flame retardant printed circuit board material which supports the discrete, surface-mounted, and integrated circuit components. A microstrip etched on the circuit board serves as the RF antenna. The CP1SR personality module easily snaps into the meter module mounting bracket. This module is then electronically attached to the metrology board via a board to board connector. The following information is sent to the personality module from the base metrology board:

- Line voltages
- Energy data
- Basic status information

The CP1SR contains contacts on the module board, located at the 12 o'clock position behind the LCD, for resetting the energy register and tamper counters. This can be accomplished with the ZRO-C2A Resetter.

The CP1SR uses a unique module identification number, provided by Itron. This ID number is contained in each message transmission and is used by the handheld and billing system to determine meter identity and location. This ID number, which is contained on a bar-coded label, is placed on the LCD housing directly above the LCD display.

Registers

Display

The CP1SR personality module is only available with a liquid crystal display, LCD. The LCD is automatically adjusted for contrast over the operating temperature range.

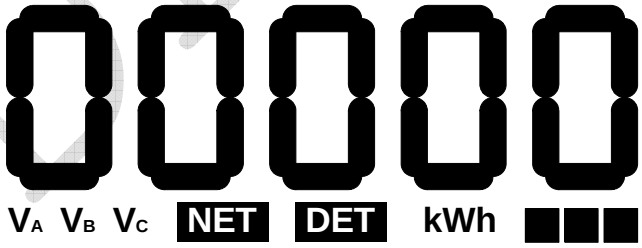

Figure 18: CP1SR LCD

This module can be configured to display either four or five digits of energy consumption and will rollover at 100,000 kWh for all meters. The self-contained meters can be programmed to display normal kWh consumption (5X1 register configuration) or tens of kWh consumption (4X10 register configuration). If the CP1SR is programmed for a 4x10 display, a “Mult by 10" label is placed on the module to the left of the LCD display. Thus, the actual energy consumption is obtained by multiplying the value on LCD display by 10.

DRAFT

The transformer rated meters can be programmed to display either a 5xTR or 4xTR. In order to determine the actual energy consumption, the display reading needs to be multiplied by the transformer ratio (TR). If the transformer ratio is 1, then the reading on the display is the actual energy consumption.

The LCD display contains an electronic load indicator (or watt disk emulator). The disk emulator is three square segments in the lower right-hand corner of the display, which scroll in the direction of energy flow. The LCD contains voltage indicators for A, B, and C phase. These indicators will blink if nominal voltage falls below 20% of reference (A phase at power up). These indicators will turn off if the voltage is below 96 volts.

Icons are illuminated on the display when the meter is programmed with a non-standard algorithm. The LCD will display DET for detented energy and NET for net energy. There is no additional indicator for the standard undetented configuration (i.e., where reverse energy is accumulated in the forward register).

Factory programmable multipliers are available for CL20 (x20, x40 and x80) applications. This allows the meter to display and transmit via RF primary readings. Meters are labeled accordingly when factory programmed.

The display will scroll between the billing register and the segment check mode based on the factory programming option.

Option	Description
1	7 second billing register display, 1 second blank, 7 second segment check display (7/7)
2	7 second billing register display, 1 second blank, 1 second segment check display (7/1)
3	Only the billing register is displayed (7/0)

Electronic Detent

The CP1SR module displays energy in increments of whole values of kWh. Standard operation for this module is to accumulate both forward and reverse energy flow in the positive direction. However, the CP1SR personality module is available with an electronic detent that will cause the meter to ignore reverse energy flow. Therefore, if the meter is inverted, the registers will accumulate in the forward direction only, thus providing uni-directional operation. At the time of order, the CP1SR module can be selected to have a detent register.

When the meter is undetented, both forward and reverse energy will be accumulated. Therefore, the electronic load indicator will flash at a rate equal to the energy consumption, regardless of the direction of the energy flow.

When the electronic detent is enabled, only forward energy flow will be accumulated.

DRAFT

Net Metering

The CP1SR module is available with the option of net metering capability. When the net option is enabled, received energy is subtracted from delivered energy. The net energy value is then displayed on the register.

Resetting Values

The ZRO-C2A Resetter zeros both the energy registers and tamper counters by direct connection to the CP1SR module. For more information, see the *ZRO-C2A Handheld Meter Resetter for the CENTRON C1S and C1SR Operating Instructions.*

Transmission Scheme

A transmission cycle contains a wait period before and after each message burst and a period of random silent time. The silent time is determined by the scaling factor, which sets a minimum and maximum silent time between each transmission cycle.

The transmission frequencies (within the 910-920 MHz band), the frequency hopping pattern, and the time interval between transmission cycles are completely random in nature. This randomness provides a method for avoiding interference with transmissions from other devices. The figure below shows an example of the CENTRON Polyphase meter CP1SR transmission cycle containing one message burst.

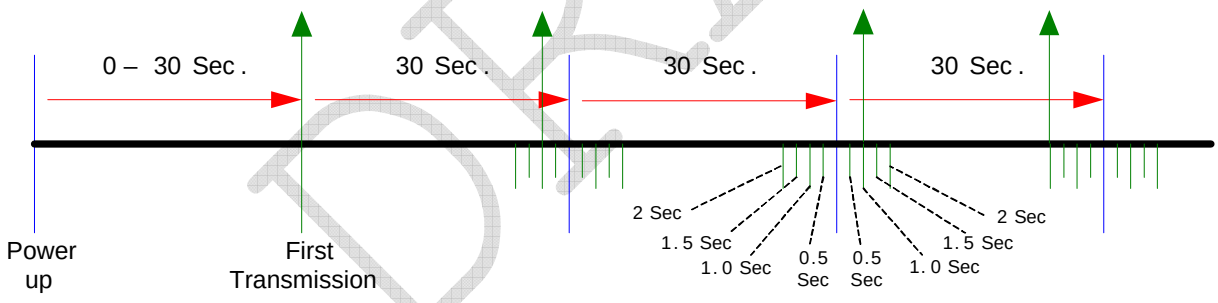

Figure 19: CENTRON-IDM High Power SCM/IDM Transmission Scheme

In the figure above, if the transmission is an IDM/SCM message pair, then the SCM occurs 250 milliseconds following the completion of the IDM.

DRAFT

FCC Regulations

The CP1SR communicates in the unlicensed, 910-920 MHz band governed by the US Code of Federal Regulations (CFR) Title 47, Part 15 Radio Frequency Devices, Sub Part C Paragraph 249 Intentional Radiator.

Changes or modifications not expressly approved by Itron could void the users authority to operate the equipment.

Tamper Detection

The CENTRON Polyphase CP1SR features the Itron patented method of tamper detection that senses both meter removal and meter inversion. The removal tamper (RTPR) increments a counter each time the meter is abruptly removed from a live meter socket. The tamper counter utilizes a tilt switch to detect when the meter is removed from a meter socket.

Testing the CENTRON CP1SR Tamper Counter

SCM Testing

In order to test the power removal counter, the meter must sense a shaken condition associated with a power outage.

1. Place the meter in a socket.
2. Apply power to the meter.
3. Remove the meter from the live socket.
4. Replace the meter in the socket.

   The meter has incremented the removal tamper counter.

The CP1SR uses the power outage (the meter being removed from a live socket) in conjunction with the meter being shaken simultaneously to increment the power removal counter.

The inversion counter increments when the meter senses reverse current flow. The metrology board senses reverse power flow and sends this status to the CP1SR personality module. The CP1SR then increments the counter and transmits the count.

As part of the 96-bit Standard Consumption Message, 4 bits are allocated for tamper indications, which include the power removal and meter inversion counters. The ReadOne® Pro handheld reader converts the 4 bit binary number to its equivalent value between 0 and 15. The table below shows the removal and inversion information based on the reported tamper count. For example, a tamper count of 6 on the ReadOne Pro would translate as 1 meter removal and 2 meter inversions since the last read.

DRAFT

ReadOne Pro Tamper Count:

Binary	Tamper Count	Inversion	Removal
0000	0	0	0
0001	1	1	0
0010	2	2	0
0011	3	3	0
0100	4	0	1
0101	5	1	1
0110	6	2	1
0111	7	3	1
1000	8	0	2
1001	9	1	2
1010	10	2	2
1011	11	3	2
1100	12	0	3
1101	13	1	3
1110	14	2	3
1111	15	3	3

Retrofitting the CP1SR Personality Module

The CENTRON R300 is a one-way radio frequency personality module that transmits within the unlicensed 910-920 MHz frequency band governed by the US Code of Federal Regulations (CFR) Title 47, Part 15 Radio Frequency Devices, Sub Part C Paragraph 249 Intentional Radiator. Any device operating within this unlicensed frequency band must contain an FCC Identification number. Therefore, the FCC ID Label included in the Retrofit Kits must be placed on the meter as shown below.

Figure 20: CP1SR FCC Label Location

DRAFT

Recent revisions to the CP1SR module include placing the FCC ID on the module itself.

Changes or modifications not expressly approved by Itron could void the user's authority to operate the equipment.

To retrofit an existing meter with an R300 module, see Retrofitting with Personality Modules (on page 8).

Testing, Troubleshooting and Maintenance

Diagnostic	Display OFF Period	Notes
Metrology message stopped for greater than 15 seconds and less than 10 minutes	Error	Missing message with diagnostic flag also written to the memory
Power up with Phase A, B, and C voltage equal to 0 degrees	noSEr	

DRAFT

CHAPTER 6

Operation: CP1SD/T/L Version

In This Chapter

Controls and Indicators....31
Factory Reset....37
Application of Power and Power-up....37
Power Down Procedures....38
Operating Modes....39
Display Modes....40
Registers....47
Interrogation and Programming....49
Time-of-Use (TOU)....50
Load Profile....53
Event Log....56
Security Codes....58
Firmware Upgrades....60
R300 Series....60
SiteScan On-Site Monitoring System....61
Testing, Troubleshooting, and Maintenance....82

This chapter describes the basic operation of the CENTRON Polyphase meter D/T/L Register. It also explains how to configure the D/T/L Register while providing detailed information on energy and demand multimeasurement functions, as well as Time of Use (TOU), Load Profile, KYZ, and communications board options.

Controls and Indicators

All controls and indicators are shown in the figure below.

Add New Photo

Callout	Description
①	Liquid Crystal Display (LCD)
②	Magnetic Switch
③	Demand Reset Button
④	Test Mode Button
⑤	Battery Slot
⑥	Battery Connector

DRAFT

Callout	Description
⑦	Optical Port
⑧	Infrared Test LED
⑨	Nameplate

Demand Reset Button

The demand reset button is located at the 6 o'clock position on the meter face. The demand reset mechanism is used to initiate a demand reset. The demand reset cover mechanism can be physically locked with a meter seal, or disabled by the meter programming software.

Infrared Test LED

One infrared (IR) LED is located at the 3 o'clock position of the meter nameplate. The LED can be configured to pulse based on any of the following energy quantities:

- Wh delivered, received
- Varh delivered, received, Q1, Q4
- VAh delivered, received (arithmetic or vectorial)

Liquid Crystal Display (LCD)

The CENTRON Polyphase meter features a versatile ANSI C12.10-compliant, 104-segment liquid crystal display (LCD). The LCD with all segments lit is shown in the figure below. There are several static indicators available on the LCD as described in the table below the figure.

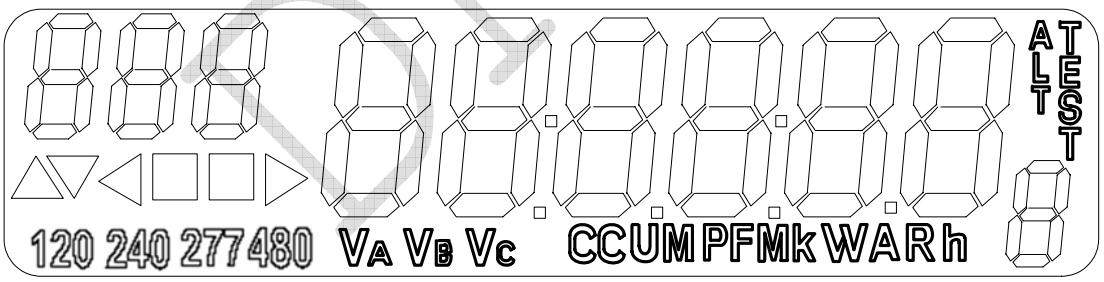

Figure 21: CENTRON Polyphase Meter LCD

Static Indicators	
Indicator	**Description**
◀■■▶	Load Emulator (-> for positive, <- for negative)
888 888888	Nine digits (7 segments each) for display of alphanumeric information

DRAFT

Static Indicators	
Indicator	**Description**
VA, VB, VC	Indicators for phase voltages being present
▲▼	Reactive Load Indicator: No arrow for unity PF ▲ for positive [delivered] (lag) ▼ for negative [received] (lead)
120 240 277 480	Nominal Voltage Indicator (one value appears at a time)
EOI	End of Interval (Registers - Dmd)
Scr Loc	Scroll Lock (indicates temporary scroll lock of a display item)
SEL nor, SEL Alt, SEL tooL	Selection of Normal, Alternate, or Toolbox display sequence
nor diSP	Entry into Normal Mode.
TEST	Entry into Test Mode.
ALT TEST	Entry into Test Alternate Mode.

The indicators shown in the table above actually display in a digital readout font; some characters may display as upper case.

Power Flow

The D/T/L Register display can be configured to provide instant power flow feedback. The load emulator and reactive load indicator identify in real time which quadrant of the power circle the power is flowing through. The meter display identifies the active quadrant as shown in the following table.

D/T/L Register Reactive Load Indicator			
Reactive (Var) Direction	**Power (W) Direction**	**Meter Display** ▲▼ ◀ ■ ■ ▶	**Active Quadrant**
Vars delivered	Watts delivered	▲ ▽ ◁ □ □ ▶	Q1
Vars delivered	Watts received	▲ ▽ ◀ □ □ ▷	Q2
Vars received	Watts received	△ ▼ ◀ □ □ ▷	Q3
Vars received	Watts delivered	△ ▼ ◁ □ □ ▶	Q4

DRAFT

Load Emulator

The Load Emulator follows the Infrared Test LED. For each pulse of the Test LED, the Load Emulator increments one segment. The operation of the Load Emulator depends on the quantity being pulsed.

- If the quantity being pulsed is “Delivered-Only”, then the Load Emulator scrolls to the right when energy is being delivered and lights the left arrow when energy is being received.
- If the quantity being pulsed is “Received-Only”, then the Load Emulator scrolls to the left when energy is being received and lights the right arrow when energy is being delivered.
- If the quantity being pulsed is “Delivered and Received”, then the Load Emulator scrolls to the right when energy is being delivered and scrolls to the left when energy is being received.

When the meter is in Toolbox mode, the Load Emulator does not follow the Test LED. Instead, the operation of the Load Emulator depends on the quantity that is currently being displayed. If the quantity being displayed is a Phase quantity, then the Load Emulator scrolls to the right if energy flow on that phase is currently delivered or scrolls to the left if energy flow on that phase is currently received. If the quantity being displayed is a Diagnostic Counter, then the Load Emulator is turned off.

The figures below represents a typical progression of the Load Emulator segments:

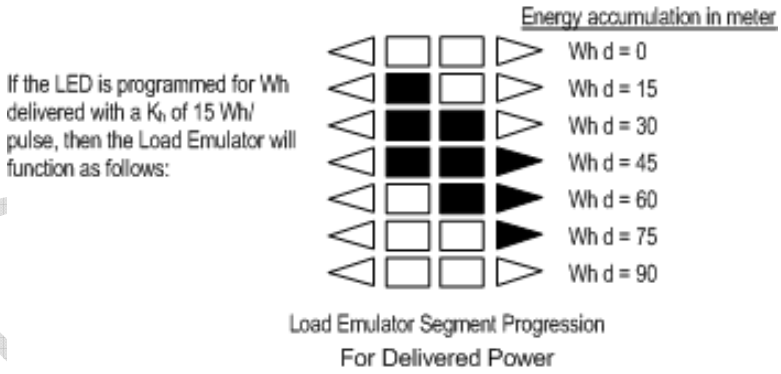

Figure 22: Load Emulator Segment Progression for Delivered Power

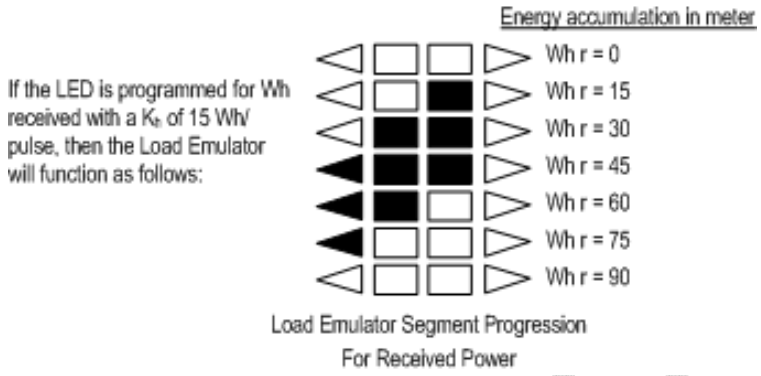

Figure 23: Load Emulator Segment Progression for Received Power

Several uni-directional quantities are available. When these quantities are programmed to LED, both the LED and the load emulator will function for delivered and received quantities.

DRAFT

Power Circle Quadrants

The following power circle diagram shows the quadrants for watts and vars delivered and received.

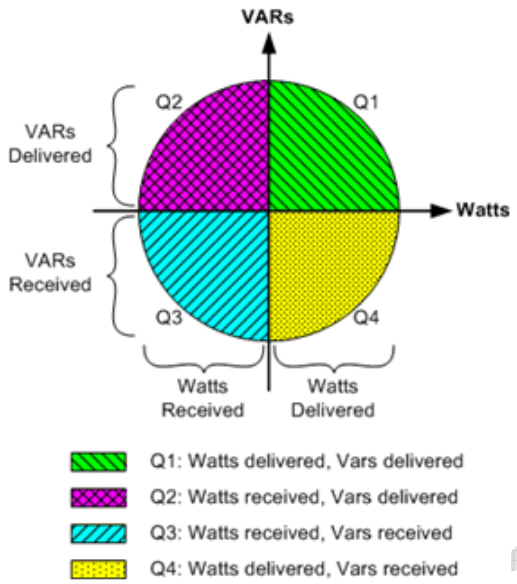

Figure 24: Power Circle Diagram

The directional calculations in the CENTRON Polyphase meter are as follows:·

- Watts delivered = (wattsQ1) + (wattsQ4)·
- Watts received = (wattsQ2) + (wattsQ3)·
- VA delivered = (VA while watts are in Q1) + (VA while watts are in Q4)·
- VA received = (VA while watts are in Q2) + (VA while watts are in Q3)·
- Var net delivered (while watts are delivered) = (varQ1) - (varQ4)·
- Var net received (while watts are received) = (varQ2) - (varQ3)·
- Var delivered (Lag) = (varQ1) + (varQ2)·
- Var received (Lead) = (varQ3) + (varQ4)

Magnetic Switch

The magnetic switch allows for manual switching between display modes as well as scroll lock of display items. To activate the magnetic switch, hold the magnet to the location shown in the figure below. For more information on using the magnetic switch, see Magnetic Switch.

Add New Photo

Optical Port

The optical port is mounted on the meter cover. The optical port is a communication interface from the meter to a PC. Interface to a PC is accomplished through a communication cable which attaches to the optical port on one end and a PC serial port on the other end. This interface cable can be powered by a DC TAP, an AC Adaptor, or the PC's COM Port. Communication through the optical port may be at 9600, 14400, 19200, or 28800 bps.

DRAFT

Test Mode Button

The Test Mode button is located at the 3 o'clock position under the meter cover. Pressing the button activates Test Mode. Test Mode is indicated by the “TEST” annunciator on the lower left of the LCD. Pressing the button a second time activates Test Alternate Mode, enabling the user to test a different energy quantity with the IR LED. Test Alternate Mode is indicated by the “TEST” and “ALT” annunciators on the lower left of the LCD. Pressing the button a third time will exit Test Mode and activate the Normal display.

If the TEST button is disabled through programming, the meter will not enter Test Mode when the button is pressed.

Factory Reset

To return the meter to its original factory settings, you must perform a factory reset. A factory reset is also referred to as a “three button reset”.

All programming of the meter will be lost when a factory reset is performed. All security codes are also cleared.

To perform a factory reset, do the following:

1. Activate the magnetic switch.
2. *Press and hold* the Demand Rest button.
3. *Press and hold* the Test Mode button.
4. While continuing to hold all buttons, cycle the power to the meter OFF, and then back ON. You do not need to hold the buttons while turning the meter OFF, only while turning it ON.
5. Once completed, the meter may possibly display "**3BReset**" or "**NorDisplay**" and all segments will blink.

   The original factory settings of the meter are restored.

Application of Power and Power-up

To energize all electronics, apply 120-480V (50/60 Hz) between A-phase and Neutral.

Do not power up the meter if the upper and lower housing are not properly secured. Line-level voltages are present inside the housings. Failure to follow this procedure could result in serious personal injury or death.

DRAFT

Power Down Procedures

To de-energize all electronics, remove power from the meter.

A power outage is recognized any time the line voltage drops 20 percent below the lowest nominal point of the voltage range. With a standard single phase power supply, a power outage occurs when line voltage drops below 96 volts; with a polyphase power supply, a power outage occurs when line voltage drops below 45 volts. When a power outage is recognized, the D/T/L Register saves all billing values to non-volatile Flash memory.

Demand Meter

Restoration of AC power energizes the electronics and causes the meter to perform self-diagnostic check procedures. The meter then retrieves all billing data from non-volatile memory, begins measuring energy, and starts the process of calculating any demand values.

TOU/Load Profile Meters

All TOU/Load Profile meters have a battery installed. The battery allows the TOU and Load Profile data in RAM to be maintained during a power outage. The battery also allows the timekeeping circuitry in the meter to maintain the meter's clock during an outage. If a battery is removed on a TOU/Load Profile meter during an outage, then the meter's clock will be off by the duration of the outage and the TOU data and some Load Profile data will be lost. Load Profile data is periodically committed to flash as described in the Load Profile section.

Upon the return of AC power, the register undergoes a procedure similar to the initial power-up. The meter performs self-diagnostic checks, data is retrieved from non-volatile memory, and normal operation is resumed. The number of minutes of power outage maintained while the meter was in carry-over operation, is added to the Time on Battery register. Since the demand interval is synchronized to the top of the hour, the first demand interval after a power outage may be shorter than the programmed interval value.

Cold Load Pickup

Normally, when power is restored to the meter after an outage, a new demand interval is started and demand calculations begin immediately. The meter can be configured to recognize a demand delay or cold load pickup (CLPU) time. If a CLPU is configured in the meter, the meter will delay demand calculations for the configured amount of time—0 to 255 minutes in one-minute increments. For example, if a CLPU time of five minutes is programmed into the meter, a power outage will cause the meter to wait five minutes after power restoration before resuming demand calculations.

Defining CLPU as zero will cause demand calculations to restart immediately after any recognized power outage.

DRAFT

Interval Make-up

Interval Make-up applies only to Load Profile meters.

During power-up processing, the Load Profile component checks if the duration of the outage exceeds the configured minimum duration time. If it does, then at least one interval will be tagged with an outage status. The interval that was active when outage occurred is tagged as a partial interval due to the outage. If the outage ended in the middle of another interval, then that interval is also tagged as a partial interval due to the outage. If any intervals occurred in between, then those intervals are tagged as skipped intervals due to the outage and their data will be all zeroes.

Operating Modes

The D/T/L Register has two operating modes: Normal Mode and Test Mode.

In the Normal Mode of operation, there are three display mode options: Normal Display Mode, Alternate Display Mode, and Toolbox Display Mode.

In the Test Mode of operation, there are two display mode options: Test Display Mode and Test Alternate Display Mode.

When the meter is placed in Test Mode, it ceases all normal billing functions. The TEST switch can be used to control the operating mode of the D/T/L Register.

Normal Mode

Normal Mode is the standard mode of operation and the mode in which the meter automatically starts when energized. Selected quantities are measured and processed in billing registers. During this mode of operation, billing registers are saved in non-volatile memory during power outages.

Test Mode

The meter can be placed into Test Mode either by pressing the TEST button or through software communications. Manual use of the TEST button can be disabled via PC-PRO+ Advanced software.

If the TEST button is disabled through programming, the meter will not enter Test Mode when the button is pressed.

While in Test Mode, the “TEST” annunciator is displayed on the LCD. When the Test Mode is activated, all billing registers and certain non-billing registers are preserved in non-volatile memory and restored when Test Mode is exited.

DRAFT

To exit Test Mode, press the TEST button. The meter will change display mode to Test Alternate. Press the TEST button again. The LCD will display “nor diSP” signifying the exit of Test Mode and entry into Normal Mode operation.

Test Mode Timeout

If the meter is left in Test Mode, the meter will automatically exit after a user-configurable Mode Timeout. See the PC-PRO+ Advanced online help for more information on configuring the Mode Timeout. This action prevents someone from accidentally leaving a meter in Test Mode and thus losing billing data.

Test Mode Lockout

Activating Test Mode Lockout via the programming software will prevent entry into Test Mode via manual Test Mode Switch activation.

Display Modes

The D/T/L Register has five display modes as shown in the table below: Normal, Alternate, Test, Test Alternate, and Toolbox. Each display mode has a separate list of items (quantities) it can display. The aggregate of items associated with a display mode is called a display list. Test and Test Alternate modes employ the same display list. The CENTRON Polyphase meter can display a maximum of 80 items. The display list is dynamically configured through PC-PRO+ Advanced. The user can select as many items per mode totaling up to 80 with at least one item in each display mode. The display items and sequence of display, along with any desired annunciators or ID code number, are selected during program setup, a feature of the PC-PRO+ Advanced programming software.

Operating Mode	Display Mode	Metrological LED Quantity
Normal	Normal Alternate Toolbox	Normal Mode Quantity Alt Mode Quantity Normal Mode LED Selection
Test	Test Test/Alternate	Test Mode Quantity Test Alt Mode Quantity

The following types of displayable items are available for the user-defined display lists:

- Energy registers
- Demand registers
- Instantaneous registers
- Self Read registers
- SnapShot registers
- Informational items (configuration, state informational items)

Numerical values may be displayed in various formats depending on configuration. For example, kilo units, mega units, fixed decimal point, floating decimal point, and leading zeros can all be configured.

DRAFT

The following tables show items programmable for display in the modes indicated.

All of the display items in the next two tables may be selected by TOU Rate. They also may be selected from the four Self Read buffers, the two Demand Reset Snapshot buffers, and Last Season Self Read buffer.

Energy Data Display Items

Energy Data Display Item	Display Mode			
	Normal	Alternate	Test	Toolbox 1
Wh (delivered, received, net, uni-directional)	X	X	X	
Varh (delivered [lag], received [lead], Net, net delivered, net received, Q1, Q4)	X	X	X	
VAh (delivered, received; arithmetic & vectorial)	X	X	X	
VAh lag (vectorial)	X	X	X	
Qh (delivered, received)	X	X	X	
Vh (Phase A, Phase B, Phase C, Average)	X	X		
Ah (Phase A, Phase B, Phase C)	X	X		
V^2h Aggregate	X	X		
A^2h Aggregate	X	X		

Demand Data Display Items

Demand Data Display Item	Display Mode			
	Normal	Alternate	Test	Toolbox2
W Delivered (Max, Present, Previous, Projected, Cumulative, Continuous Cumulative)	X	X	X	
W Received (Max, Present, Previous, Projected, Cumulative, Continuous Cumulative)	X	X	X	
W Net (Max, Present, Previous, Projected, Cumulative, Continuous Cumulative)	X	X	X	
W Uni-directional (Max, Present, Previous, Projected, Cumulative, Continuous Cumulative)				
Var Q1, Var Q4 (Max, Present, Previous, Projected, Cumulative, Continuous Cumulative)	X	X	X	
Var Delivered [lag: Q1+Q2] (Max, Present, Previous, Projected, Cumulative, Continuous Cumulative)	X	X	X	

DRAFT

Demand Data Display Item	Display Mode			
	Normal	Alternate	Test	Toolbox2
Var Received [lead: Q3+Q4] (Max, Present, Previous, Projected, Cumulative, Continuous Cumulative)	X	X	X	
Var Net				
VA Delivered [arithmetic or vectorial] (Max, Present, Previous, Projected, Cumulative, Continuous Cumulative)	X	X	X	
VA Received [arithmetic or vectorial] (Max, Present, Previous, Projected, Cumulative, Continuous Cumulative)	X	X	X	
VA Lag (Max, Present, Previous, Projected, Cumulative, Continuous Cumulative)	X	X	X	
Max A (per phase: A, B, C)	X	X		
PF Average	X	X		
Min P.F.	X	X		
Coincident Demands (up to 4)	X	X		

Instantaneous Data Display Items

Instantaneous Data Display Item	Display Mode			
	Normal	Alternate	Test	Toolbox3
Instantaneous W	X	X	X	
Instantaneous Var	X	X	X	
Instantaneous VA (arithmetic & vectorial)	X	X	X	
Instantaneous Volts (A, B, C)	X	X		X
Instantaneous Amps (A, B, & C)	X	X		X
Instantaneous P.F.	X	X		
Instantaneous Frequency (Hz)	X	X		
Instantaneous Current Phase Angles (A, B, C)				X
Instantaneous Voltage Phase Angles (A, B, C)				X

Informational Data Display Items

Informational Data Display Item	Display Mode			
	Normal	Alternate	Test	Toolbox4
Calibration Date & Calibration Time	X	X		
Cold Load Pickup Outage Time	X	X		
Current Transformer Ratio	X	X		
Current Date, Day & Current Time	X	X		

DRAFT

Informational Data Display Item	Display Mode			
	Normal	Alternate	Test	Toolbox4
Days Since Demand Reset	X	X		
Demand Reset Count	X	X		
Diagnostic Counters 1-5				X
Display On Time	X	X		
Firmware Revision	X	X		
Last Outage Date & Last Outage Time	X	X		
Last Program Date & Last Program Time	X	X		
Last Reset Date & Last Reset Time	X	X		
Last Test Date & Last Test Time	X	X		
Load Profile Pulse Weight 1-8	X	X		
Load Research ID	X	X		
Last Season Self Read Registers	X	X		
Meter ID & Meter ID 2	X	X		
Minutes on Battery	X	X		
Normal Kh & Normal Kh #2 (Alternate Kh)	X	X		
Number of Subintervals	X	X		
Number of Test Subintervals			X	
Last Interrogate Date & Time	X	X		
Option Board Fields 1 - 3	X	X		
Outage Count	X	X		
Percent VQ Log Full	X	X		
Program Count	X	X		
Program ID	X	X		
Register Fullscale	X	X		
Register Multiplier	X	X		
RF ID 1-3	X	X		
Segment Test	X	X		
Service Type	X	X		
SiteScan Diagnostic Count	X			
Software Revision Number	X	X		
Subinterval Length	X	X		
Test Kh & Test Kh #2 (Test Alternate Kh)			X	
Test Subinterval Length			X	

DRAFT

Informational Data Display Item	Display Mode			
	Normal	Alternate	Test	Toolbox4
Time Remaining in Demand Subinterval	X	X	X	
Time Remaining in Test Mode			X	
TOU Expiration Date	X	X		
Transformer Ratio	X	X		
User Data 1-3	X	X	X	
Voltage Transformer Ratio	X	X		

Magnetic Switch

The magnetic switch enables scroll lock of display items as well as manual switching between display modes. The magnetic switch is located near the front of the meter face in the 10 o'clock position.

Scroll Lock

When the magnetic switch is activated for one second and removed, the “ScrLoc” message appears on the LCD and the display locks on the current display item. The value displayed on the locked screen will continue to be updated every second. The user may scroll to the next item by again momentarily activating the magnetic switch. The display will remain in the scroll lock condition until a mode timeout occurs or until the display mode is changed.

Changing Display Modes

When the magnetic switch is activated for four seconds, the display may indicate the “ScrLoc” condition (if not already in scroll lock) and then, enter into a display mode selection menu. The menu options are: “SELnor”, “SELALt”, and “SELtooL”. The desired mode can be selected by removing the magnet when it is being displayed.

Mode Timeout

When the display is put into display modes other than Normal display (Alternate, Toolbox, Scroll Lock, Test, or Test Alternate display modes), the meter will return to normal operation after a programmable Mode Timeout expires. The Mode Timeout can be configured from 1 to 255 minutes using the meter programming software.

Normal Display Mode

The Normal Display Mode is the default display when the meter is energized and when the meter is in Normal Operating Mode. When Mode Timeout occurs from any other display mode, the display returns to Normal Display Mode.

DRAFT

Alternate Display Mode

The Alternate Display Mode is functionally identical to the Normal Mode. The meter itself still operates under normal measurement, but the display sequence can be programmed to show a different set of displayable items from those in the Normal Display Mode.

While in Alternate Display Mode, the “ALT” annunciator on the lower left of the display designates activation of the Alternate Display Mode. Upon completion of the Mode Time-out period, the meter automatically returns to the Normal Display Mode.

Toolbox Display Mode

Toolbox Display Mode is identical to Normal Mode except that the list of displayable items is a fixed list dependent on the service type.

You can enter the Toolbox Mode from either Normal or Alternate Mode. While in Toolbox Mode, a flashing “TEST” appears on the left side of the display.

Once activated, the Toolbox Mode scrolls through the list of per-phase items and diagnostic counters. The table below shows an example of a 3-element meter.

Description	Display		
Phase A voltage angle	PhA	0.0°	U
Phase A voltage	PhA	xxx.x	U
Phase A current angle	PhA	xxx.x°	A
Phase A current	PhA	xxx.x	A
Phase B voltage angle	PhB	xxx.x°	U
Phase B voltage	PhB	xxx.x	U
Phase B current angle	PhB	xxx.x°	A
Phase B current	PhB	xxx.x	A
Phase C voltage angle	PhC	xxx.x°	U
Phase C voltage	PhC	xxx.x	U
Phase C current angle	PhC	xxx.x°	A
Phase C current	PhC	xxx.x	A
# of Diagnostic 1 errors	d1	xxx	
# of Diagnostic 2 errors	d2	xxx	
# of Diagnostic 3 errors	d3	xxx	
# of Diagnostic 4 errors	d4	xxx	
# of Diagnostic 5 errors	d5	xxx	

DRAFT

All “PhA”, “PhB”, “PhC” quantities are displayed with a fixed decimal and no leading zeros. While displaying phase information, the load emulator cycles at a fixed rate in the direction of energy flow for that phase. The Load Emulator is not displayed while the diagnostic counters are displayed. The diagnostic counters are displayed with leading zeros (000-255).

The per-phase Volt and Amp readings are Root-Mean-Square (RMS) values which are updated every second. The voltage and current angles are updated every five seconds. The direction of the load emulator is the same as the direction of energy flow for the phase being displayed. If any quantity is undefined due to the meter’s service, the per-phase information for that quantity will not be displayed.

If the magnitude of the current for that phase is too low, the current magnitude and angle for a particular phase (A, B, or C) are displayed as zeros.

The SiteScan diagnostic counters represent the number of times each diagnostic error occurred since the last time the counters were reset.

The diagnostic counters range from 0 to 255 and can only be reset to zero through the PC-PRO+ Advanced programming software.

Upon completion of the Mode Timeout period, the meter automatically returns to the Normal Display Mode.

Test Display Mode

The Test Mode can be accessed from either the Normal, Alternate, or Toolbox Mode by removing the meter cover and pressing the Test button.

To activate this mode with a programming device, refer to the appropriate software user’s manual.

The Test Mode annunciator (“TEST”) is displayed while the D/T/L Register is in Test Mode.

Activating Test Mode causes all billing data to be transferred to non-volatile memory. Upon entry of Test Mode, if any calculated demand values of the present interval are higher than the stored maximum demand values, the new values are stored as maximum demands. All Test Mode program parameters are then retrieved from non-volatile memory for use in Test Mode. The parameters are demand test interval length, number of subintervals, and test Kh. Each is independent from those specified for Normal Mode. Activating the demand reset while in Test Mode initializes the demand test interval. (This interval is not synchronized to the top of the hour.)

To exit Test Mode and place the register in Normal Mode, perform one of the following:

- Press and then release the manual Test Mode button *a second and a third time*. The “TEST” annunciator will go away.
- Wait for selected Test Mode timeout to occur; if the meter is inadvertently left in Test Mode, it will return to Normal Mode at the completion of Mode Timeout.
- Removal of power for a brief period will force Test Mode to end.

DRAFT

Values calculated in Test Mode are not added to previous billing values or stored for retrieval. After exiting Test Mode, all billing data previously transferred to non-volatile memory is retrieved, an end-of-interval (EOI) is initiated, and a new demand interval begins.

Any time-related activities, such as TOU rate changes or Daylight Savings Time (DST) changes that occur while the meter is in Test Mode, are performed upon exiting Test Mode.

Test Alternate Display Mode

Test Alternate Mode is functionally identical to Test Mode. To enter Test Alternate Mode, press the Test switch a second time. The “TEST” and “ALT” annunciators will be displayed. The meter will return to Normal Mode at the completion of Mode Time-out.

Diagnostic Displays

The user may program the behavior that the meter should exhibit for every specific error condition. The possible actions in order of increasing severity are to ignore the error (do not display the error code); scroll its error code (an error code is automatically displayed after each display item); or lock the display, showing only the error code (do not display anything else).

Registers

There are five register types in the D/T/L Register: Energy, Demand, Instantaneous, Self Read (or Snapshot), and Information.

Energy Registers

The D/T/L Register can measure numerous energy quantities (as shown in the table below) from which the user can configure any eight to be registered.

Measured Energy Quantity Type	Phases	Directions
watt-hours	aggregate	delivered received net uni-directional
Varhours	aggregate	delivered received net net delivered net received Q1, Q4

DRAFT

Measured Energy Quantity Type	Phases	Directions
VA-hours (vectorial or arithmetic [RMS])	aggregate	delivered received lagging
Volt-hours (Vh)	phase A phase B phase C average	
Amp-hours (Ah)	phase A phase B phase C	
V^2h	aggregate	
A^2h	aggregate	
Q-hours	aggregate	delivered received

Demand Registers

Demands can be calculated from any of the eight selected energy quantities. The user can configure up to ten demand registers. The D/T/L Register can compute three types of demand: Block Demand, Rolling Demand, or Thermal Demand.

Measured Demand Quantity Type	Demand Registers	Phases	Directions
watt-hours	Block, Rolling, Thermal	aggregate	delivered received net uni-directional
Varhours	Block, Rolling, Thermal	aggregate	delivered received net per quadrant
VA-hours (vectorial or arithmetic [RMS])	Block, Rolling, Thermal	aggregate	delivered received lagging
Amp-hours (Ah)	Block	phase A phase B phase C	

DRAFT

Instantaneous Registers

The D/T/L Register is capable of displaying Primary or Secondary Instantaneous registers, with the following exceptions: Frequency, Power Factor (PF), and Phase Angles. The user can configure the CT and VT multipliers (transformer ratios) using PC-PRO+ Advanced programming software.

Instantaneous Register Quantity	Directions (Types) [Range]	Phases
W	Signed (+) Delivered or (-) Received	Aggregate
Var	Signed (+) Delivered or (-) Received	Aggregate
VA (Vectorial or Arithmetic)	None	Aggregate
V	None	A, B, C
A	None	A, B, C
PF	None	Average
Frequency	None	A
Phase Angles	Va = 0°	Vb, Vc, Ia, Ib, Ic

Self Read and Snapshot Registers

There are up to fifteen self-read registers available in the D/T/L Register, depending on the particular version. All meters have two snapshot registers that store self read data triggered by a demand reset. Snapshot 1 is taken at the most recent demand reset. Snapshot 2 is the next most recent set of self read data at demand reset. Meters with time keeping functionality have an additional twelve self-reads registers used for scheduled self-reads, and one Last Season self-read register triggered at a season change in TOU meters.

Information Registers

The D/T/L Register also stores a significant amount of informational data. These non-registered values are listed in Informational Data.

Interrogation and Programming

Interrogation

The meter can be interrogated via the ANSI C12.18 optical port using PSEM (ANSI C12.18-1996) protocol.

DRAFT

Programming

The software for programming this meter (PC-PRO+ Advanced) is a 32-bit Windows NT/2000/XP application. User-definable security codes in both the programming software and the meter prevent unauthorized access to the meter.

Programming and/or interrogation of the meter can be accomplished through the optical port using a laptop PC and an optical probe.

Time-of-Use (TOU)

The Time-of-Use (TOU) functionality is designed for use in billing applications where multiple rates (bins) are required for energy and demand. The TOU option provides 4 Rates + Total

TOU is a clock-dependent feature; therefore, a battery is required in the meter.

TOU Schedules

Schedule information is programmed using the PC-PRO+ Advanced Programming software. The CENTRON Polyphase meter TOU calendar is programmable for up to 25 years and accommodates leap years, daylight savings time, and recurring holidays.

When using the TOU functions of the meter, energy and demand registrations are segmented into time blocks during the day. Each time block is assigned one of four rate periods. In addition to these four rate periods, a total rate is always available.

Calendar Schedule

The calendar schedule contains all daily and yearly information needed for the meter to measure and register data in real time. The schedule contains daily patterns, seasons, and up to 44 holidays with programmable day types, rates and outputs. For information concerning the entry of these parameters into the PC-PRO+ Advanced software package, consult the *PC-PRO+ Advanced System Manual*.

Rates

Four independent rates are available for TOU registration. These are designated A, B, C, and D. Only one of these rates can be active at a time. The Total register, designated Rate **T**, is always active, regardless of the active rate period.

The D/T/L Register TOU rates are applied to all energy and demand registers that have been selected for measurement. Therefore, all energy and demand registers are segmented as per the TOU schedule and available in each rate period, in addition to the Total rate.

DRAFT

Daily Patterns

Each pattern defines the times during the day that rate period A, B, C, or D begins and ends. Up to 24 rate period changes may be specified for each daily pattern.

Day Types

There are four day types: Weekday, Saturday, Sunday, and Holiday. Each day of the week is assigned to one of the four day types. Each day type is assigned one of the four daily patterns when each season is defined. Any of the daily patterns can be used in any combination with the day types.

Seasonal Schedules

A season is a period of weeks during the year when a particular rate structure is in effect. The year can be divided into a maximum of eight seasons. The day types with associated daily patterns can be defined differently for each season. Up to eight season change dates are specified for each year in the calendar schedule. If multiple seasons are not used, the TOU schedule contains one year-round season.

Season changes occur at midnight of the season change date (where midnight corresponds to 00:00 hours) or can be designated through programming to occur at the first demand reset following the season change date.

TOU Registers

The D/T/L Register can measure up to eight energies and ten demands. When the meter is configured for a TOU calendar, all energies and demands that are selected for measurement also have the configured TOU rates applied to them, with the exception of previous, projected, and instantaneous registers. The TOU energy and demand registers are available for display as well.

Current Season Registers

All energy and demand registers selected are considered current season registers. If a single rate schedule is applicable year-round, then only current season registers are used.

Last Season Registers

Last season registers are available when two or more seasons are used during the year. For every current season register (with the exception of Cumulative and Continuous Cumulative registers), there is a last season register for the same quantity. Last season registers are designated “LS” in the programming software. Last season registers can be selected for display in Normal and Alternate Display Lists.

TOU Operation

This section describes TOU operation specific to the meter display. Several TOU indicators are available on the liquid crystal display (LCD).

DRAFT

Rate Annunciators and Active Rate Indicators

Rate annunciators are available with each demand and energy register. An A, B, C, or D will be displayed on the far right side of the LCD to indicate the rate period for each quantity being displayed. The rate annunciator that may be displayed for the Total Rate is **T**.

If the rate annunciator is flashing while a demand or energy value is displayed, the annunciator indicates that it is the current rate in effect. This gives a quick indication that the register is programmed with the correct TOU schedule and that it is currently set to the correct time.

Season Change

At the end of a specified season, all last season registers are updated with current season register data. The meter can be programmed to either delay the season change until a demand reset occurs, to activate an automatic demand reset at season change, or to change the season without performing a demand reset. A season change occurs at midnight at the end of the programmed season change date or at the first demand reset following the season change date, depending on how the meter has been programmed. Some utilities program the season change to occur at the first demand reset following the season change date to make season changes concurrent with the meter reading cycles.

The following events take place when an automatic demand reset occurs at a season change:

1. The current season energy registers are copied directly to the last season energy registers.
2. The current season maximum demand registers are copied directly to the last season maximum demand registers, and **T** rate is added to the cumulative demand register.
3. After the demand reset, the maximum demand registers are reset to zero, and the **T** rate cumulative demand register is copied to the last season cumulative demand register.

If there is no demand reset at season change, all current season registers are directly copied to last season registers at season change, but no current season registers are zeroed.

Battery Carryover

When the meter recognizes a power outage, it begins battery carryover operations. Billing data is transferred to non-volatile memory at this time, and all circuits, except the RAM and timekeeping circuit, are de-energized. The timekeeping circuitry, powered by the lithium battery, keeps time while the meter is in battery carryover mode.

Upon restoration of AC power, all self-diagnostics are completed, and data is retrieved from non-volatile memory. The real time is retrieved from the real time clock. The elapsed time of the outage is also added to the stored value for the time spent on battery.

DRAFT

Load Profile

Load Profile (mass memory) data is stored in blocks (records) of 128 intervals. The profile interval length is the same for all channels and is independent of the interval length for demand quantities. Each interval of load profile data is identified by date and time. Each interval contains status bits indicating the occurrence of outages, Test Mode, and other significant events or errors. Refer to the PC-PRO+ Advanced online help for a list of Load Profile Status Codes. Register readings are also stored for each channel for data validation.

The Load Profile functionality is designed for use in billing and load research applications where multi-channel high resolution data is needed.

Load Profile Specifications

Capacity

The load profile option is available in 144 kBytes of memory. The amount of memory actually used for load profile recording is programmable in 1 kByte increments. There are up to 8 channels available for interval load profile data.

Bit Resolution

The load profile operates with 16-bit data resolution. Equivalent pulse count resolution is as follows:

Bits	Pulse Counts
16	65,535
15[1]	32,767

1 When a Net quantity (i.e., Net Wh) is chosen as a load profile channel, all load profile channels have 15-bit data resolution.

There is a difference between MV-90 and the D/T/L Register concerning load profile data. The D/T/L Register can accommodate a maximum of 65,535 pulses (16 bit) per interval. (A maximum of 32,767 pulses per interval is allowed when using bidirectional quantities because the 16th bit is used for "+" or "-"). MV-90 is a 16 bit system, however the 16th bit is always used for "+" or "-". Since the 16th bit is always signed, the maximum allowed pulses per interval is always 32,767. If MV-90 receives a number of pulses per interval larger than 32,767, MV-90 will record a negative number (received value) for that interval.

Itron recommends programming any D/T/L Register with load profile that is interrogated by MV-90 or any system that exports load profile information to MV-90 to use 15 bit resolution or 32,767 pulses per interval.

DRAFT

Interval Lengths

The load profile records data on a block interval basis. The interval length is programmable for 1, 2, 3, 4, 5, 6, 10, 12, 15, 20, 30, or 60 minutes. The interval length is the same for all channels and is independent of the interval length for demand quantities.

Power Outage

The D/T/L Register flags an interval when a power outage exceeds a specified number of seconds. The range for power outage length is programmable from 0 to 255 seconds and must not exceed the programmed interval length.

- During power outages the CENTRON Polyphase meter maintains all meter data as well as timekeeping functions.
- During an outage, billing data is stored in non-volatile memory.
- When power is restored, data is returned to active memory and normal metering resumes.
- The meter records the date and time of the power outage and the power restoration (for meters with batteries).

Channel Configuration

The D/T/L Register can be programmed to have one to eight channels of interval load profile data. Each channel corresponds to an energy register selected during the programming process. In order to load profile an energy, the energy must first be selected as a quantity to be measured.

Selection of channel configuration and pulse constants is accomplished through the programming software. Each data channel is programmed to record load profile data from a user-selected register. The energy registers allowed for load profile are listed in Energy Data.

Pulse Constants

For each load profile channel, the pulse constant is programmable from 0.01 to 10 unit hours per pulse in 0.01 increments. The load profile pulse constants apply to secondary readings only.

Example: Calculation of pulse weight from kWh

A meter, 3-element, 120 Volts, CL20 is programmed to record kWh in load profile with 15 minute intervals.

First, calculate the maximum watthour accumulation during 15 minute intervals:

$$Wh_{\max} = (120V)X(20A)X(3phases)X(0.25hours)$$

$$Wh_{\max} = 1{,}800watthours$$

The maximum number of pulses is 65,535; therefore, the smallest pulse weight (PW) that can be used is:

$$PW\min = \frac{1800Wh}{65{,}535} = 0.0275$$

Since the pulse weight value must be a multiple of 0.01 in the meter, 0.03 Wh could be programmed as the pulse weight (Ke) for the kWh channel in load profile in this example.

Data Storage

The D/T/L Register uses non-volatile flash memory to record load profile data. Data is stored in load profile memory at the end of each interval. Each channel has 16 bits written to load profile memory. For example, consider 8 channels of load profile. At the end of an interval, a 16-bit number is written into load profile memory for channel 1; a 16-bit number for channel 2 follows immediately; and so on, up to the last 16-bit number for channel 8, which follows immediately.

The process continues for each interval until 128 intervals (one block or record) have been recorded. In addition to the profile data, each interval contains eight types of status bits written into each data interval.

1. **Partial Interval**—The status bit is set for a partial interval due to a time adjust, power outage, or beginning interval.
2. **Long Interval**—The status bit is set for a long interval due to a time adjust backwards.
3. **Skipped Interval**—The status bit is set for a skipped interval due to either a power outage, Test Mode, or time adjusted forward during the interval.
4. **Test Mode**—The status bit is set for Test Mode due to the meter being in test mode during the interval.
5. **DST**—The status bit is set for DST due to DST being in effect during the interval.
6. **Power Outage**—The status bit is set for each interval during which a power outage occurs (greater than the minimum time programmed in software).
7. **Time Adjust Forward**—The status bit is set for time adjust forward during the interval.
8. **Time Adjust Backward**—The status bit is set for time adjust backward during the interval.

Refer to the PC-PRO+ Advanced online help for a list of Load Profile Status Codes.

In addition to the interval profile data and the interval status data, each block contains a time tag specifying the month, day, hour, and second of the end of the data block.

DRAFT

Recording Duration

The following equation can be used to determine the recording duration of the load profile:

Recording Duration (days) = (M x I x 1024) / (1,440 x [(2 x C + 2) + ((6 x C + 4) / 128)])

M = Memory size in kilobytes

C = Number of channels

I = Interval Length in minutes

The tables below show the recording duration for 144 kilobytes (KB) load profile memory size.

Recording Duration (in days) for 144 KB of Load Profile Memory												
	INTERVAL LENGTH (Minutes)											
Number of Channels	**1**	**2**	**3**	**4**	**5**	**6**	**10**	**12**	**15**	**20**	**30**	**60**
1	25	50	75	100	125	150	251	301	376	502	753	1506
2	16	33	50	66	83	100	167	200	250	334	501	1003
3	12	25	37	50	62	75	125	150	187	250	375	751
4	10	20	30	40	50	60	100	120	150	200	300	601
5	8	16	25	33	41	50	83	100	125	166	250	500
6	7	14	21	28	35	42	71	85	107	143	214	429
7	6	12	18	25	31	37	62	75	93	125	187	375
8	5	11	16	22	27	33	55	66	83	111	166	333

Event Log

The D/T/L Register has an Event Log that records historical events that have taken place in the meter. The events to be logged must be configured via the PC-PRO+ Advanced programming software. To aid in troubleshooting, Itron recommends enabling all events to be logged.

In order to have date and time associated with an event, Time-of-Use or Load Profile is required. A Demand-only D/T/L Register allows for event log recording. However, in the event of a power outage, the date and time will not be reliable.

The D/T/L Register Event Log is circular in nature, allowing for the capture of the most recent events in the meter at all times. The CENTRON Polyphase meter is capable of retaining 420 events prior to wrapping.

DRAFT

Each event log record includes an event description, a time and date stamp, and additional information on certain events.

For meters with batteries, all logged events are retained through a power outage. For meters without batteries, the Event Log is periodically written to non-volatile memory. Events that occur just prior to a power outage may be lost depending on whether they were backed-up or not.

The contents of the event log can be viewed using the meter programming software.

The following events may be configured for recording in the D/T/L Register Event Log:

- **Clear Billing Data**—billing data has been cleared upon initialization of the meter, or as a secondary activity by authorized personnel
- **Configuration Error**—meter configuration was not successful
- **Demand Reset**—a demand reset occurred
- **Diagnostic 1 On**—diagnostic 1 condition occurred
- **Diagnostic 1 Off**—diagnostic 1 condition went away
- **Diagnostic 2 On**—diagnostic 2 condition occurred
- **Diagnostic 2 Off**—diagnostic 2 condition went away
- **Diagnostic 3 On**—diagnostic 3 condition occurred
- **Diagnostic 3 Off**—diagnostic 3 condition went away
- **Diagnostic 4 On**—diagnostic 4 condition occurred
- **Diagnostic 4 Off**—diagnostic 4 condition went away
- **Diagnostic 5 On**—diagnostic 5 condition occurred
- **Diagnostic 5 Off**—diagnostic 5 condition went away
- **DST Time Change**—DST adjustment forward or backward has occurred
- **Event Log Cleared**—Event Log was cleared by programming software
- **Full Scale Overflow**—see Non-fatal Error 6 for description
- **Load Profile Error**—see Non-fatal Error 5 for description
- **Logon Successful**—a user or option board logged on successfully to the meter
- **Loss of Phase**—see Non-fatal Error 2 for description
- **Loss of Phase Restored**—phase voltage was restored
- **Low Battery**—see Non-fatal Error 1 for description
- **Meter Reprogrammed**—meter was initialized or reconfigured
- **Power Outage**—power was lost
- **Power Restored**—power was restored
- **Rate Change**—TOU rate change occurred
- **Register Self Read**—self read occurred
- **Reverse Power Flow**—see Non-fatal Error 4 for description
- **Reverse Power Flow Restored**—delivered power flow resumed after reverse flow exceeded a configured threshold
- **Season Change**—TOU season change occurred
- **Security Fail**—logon with security code failed

DRAFT

- **Security Pass**—logon with security code succeeded
- **SiteScan Error**—a SiteScan error occurred
- **Test Mode Entered**—Test Mode or Alternate Test Mode was entered
- **Test Mode Exited**—Test Mode or Alternate Test Mode was exited
- **Time Changed**—a time adjustment forward or backward occurred
- **TOU Schedule Error**—see Non-fatal Error 3 for description

Security Codes

The meter security codes provide protection for meter register and load profile data. Four levels of security are inherent in the D/T/L Register. The table below describes the level of access to the meter provided by each device security code. Once security codes are programmed and stored in the meter, users are required to logon to the meter with an appropriate password. The user may choose not to use security codes in the meter's program.

D/T/L Register Security Code Levels

Level	Access Level	Description
Primary/Firmware Download	Read/Write access and firmware download	Access to the meter is unrestricted. All read/write functions are available including all programming options, the ability to download new firmware to the meter, and upgrade or downgrade MeterKey™ features. New security codes can be programmed into the meter using the level of access provided by this security code.
Limited Reconfigure	Read/Limited Write access	Provides read and limited write access including the ability to reset demand, change the time in the device, and reconfigure the device. You cannot clear billing data, change display modes, or change security codes.
Secondary	Read-only access plus Demand Reset and Reset Time	Read-only access is provided as well as the ability to reset demand and change the time.
Tertiary	Read-only access	Access to the meter is limited to reading information from the meter. No operation that writes information to the meter is available. This code can be used by other applications that contact the meter.
Previous Security Code	Read-only access	This code is not programmed into the meter; it allows a user to save an alternate password in the software to use for logging on only; can be any security level.

DRAFT

Implementing Security Codes

When a customer file is created, security codes are entered by the software (PC-PRO+ Advanced) operator. Each security code may be from 1 to 20 characters long. For example, the primary code is selected to be ABC and the secondary code is to be 123. When the software first attempts to communicate with a meter that has just been delivered from the factory, the meter has only null security codes. The software downloads and unlocks the meter with these null security codes. When the meter is initialized, the software downloads security codes ABC and 123 to the meter.

When unlocking a meter with security codes, the software downloads the primary code that is in the PC-PRO+ Advanced Device Security Codes dialog— in this case ABC. If this code matches the meter primary code, the operator can read and/or program the meter. If it does not match the primary, but matches the secondary, 123, the operator can only read data from the meter.

For example:
Three PCs are set up to interrogate D/T/L Registers. One PC is designated as the Master PC. The Master PC programs D/T/L Registers for installation and interrogates meters in the field. In this example, the Master PC programs a meter with a primary security code of SEN1 and a secondary security code of 222. The Master PC can then read data from and reprogram the meter. The remaining two PCs are configured so that the same customers are in each database, but each PC-PRO+ Advanced software is configured with a security code that matches the meter's secondary security code only. In this case, the two additional PCs have been given security code 222. When the two PCs interrogate the meter, the security code they download provides them with secondary security code privileges only.

To set up a meter so that the Master PC can perform all meter functions, but any other PC has limited access, program the meter through the Master PC with a primary security code, but leave the secondary security code blank. Any PC other than the Master PC will connect to the meter using a blank security code and thereby gain secondary access only.

Clearing Security Codes

To clear the existing security codes in the meter, perform a Factory Reset.

If security codes are cleared from the meter in this manner, the PC will have no record of a security code change. The PC will go through the following attempts to gain access to the meter:

- If the **Options** | **Default Values** | **Device Security Codes** | **Override Security Code** menu option *IS NOT* checked, PC-PRO+ Advanced will:
- Use the security code in the device **Primary** field.
- Use the security code in the device **Previous Security Code** field.
- Use all nulls.
- If the **Options** | **Default Values** | **Device Security Codes** | **Override Security Code** menu option *IS* checked, PC-PRO+ Advanced will:
- Use the security code entered in the **Security Code** field on the logon screen.

DRAFT

- Use the security code in the device **Previous Security Code** field.
- Use all nulls.

Firmware Upgrades

PC-PRO+ Advanced 7.2 and higher supports upgrading firmware for D/T/L Registers. When the firmware is upgraded, all billing data in the D/T/L Register is erased. After a D/T/L Register's firmware is upgraded, you must re-initialize the meter.

You can determine which version of D/T/L Register firmware is installed on your PC by looking at Add/Remove Programs in the Control Panel (Start | Settings | Control Panel) and reading the Support Information for the D/T/L Register firmware. The firmware version is also displayed each time you begin a firmware upgrade while logged on to a D/T/L Register.

This feature is not available for meters that have been initialized (sealed) for Canadian installations. If a Canadian meter has not been sealed, the firmware can be upgraded.

Installing D/T/L Register Firmware on the PC

You must install the D/T/L Register firmware on your computer to make it available to PC-PRO+ Advanced. You can obtain firmware upgrades through your Itron, Inc. Sales Representative. You can install only one version of D/T/L Register firmware on a computer.

For more information, refer to your PC-PRO+ Advanced online help files and the *PC-PRO+ Advanced CENTRON Device Online User's Manual*.

After you have installed the D/T/L Register firmware on your computer, if you attempt to initialize a D/T/L Register that has a different version of firmware, a message is displayed stating that the firmware in the meter is different and asks if you want to change the meter firmware.

R300 Series

As an option the D/T/L register can be ordered with R300 functionality. The R300 continuously transmits Standard Consumption Messages (SCM) and Interval Data Messaging (IDM) using radio frequency in the unlicensed frequency band which can be read by handheld, drive-by or fixed network systems. The table below describes the various versions of the R300 option:

Option	SCM ERT Type	IDM Type	Description
R300CD (HP/LP)	04	N/A	Two ERT register w/o IDM
R300CD3 (HP/LP)	08	25	Three ERT register w/ IDM

DRAFT

Each SCM message contains tamper information. Below is a chart that indicates the tamper information available in each SCM:

SCM #	Indicator #	Group
1	1	Meter Inversion
1	2	Meter Removal
2	1	Demand Reset (Push Button)
2	2	Low Battery or End of Billing Schedule (1 Year from end) Warning
3	1	Billing Events
3	2	Non-Billing Warnings

Using the PC-PRO+ Advanced programming software, you can:

- Configure the quantity(s) to be transmitted
- Select the type of registers to be transmitted.
- Select the number of digits for the data to be transmitted as well as the number of decimal place digits for the data.
- Select the type of registers to be transmitted.
- Select the number of digits for the data to be transmitted as well as the number of decimal place digits for the data.
- Select one of three date formats to be transmitted as ERT information.
- Enable TOU and select the TOU rate to be transmitted.
- Select whether transmission shall be stopped based on SiteScan

When using Type 8 ERTs the format for the kWH value should be 7.0(XXXXXXX) and the format for the Demand value should be 7.3 (XXXX.XXX).

SiteScan On-Site Monitoring System

The SiteScan on-site monitoring system consists of the following features:

- Meter self-diagnostic checks
- Toolbox Mode with its on-site and/or on-line display
- SiteScan system and installation diagnostic checks
- Diagnostic output alarms

Using the Itron, Inc. PC-PRO+ Advanced Programming software package you can customize the SiteScan System for each individual metering site. The use of the SiteScan on-site monitoring system greatly enhances the ability to diagnose and resolve site-specific metering or tampering problems.

DRAFT

SiteScan Meter Self-Diagnostic Checks

The CENTRON Polyphase meter performs self-diagnostic checks to confirm proper meter operation. The following is a list of possible errors and associated error codes:

Error	Error Type	Error Code
Flash Error	Fatal Error	FAt **Error1**
RAM Error	Fatal Error	FAt **Error2**
Data Flash Error	Fatal Error	FAt **Error3**
CPC/Metrology Error	Fatal Error	FAt **Error4**
Power Down Error	Fatal Error	FAt **Error5**
Low Battery Error	Non-Fatal Error	ERR **1-----**
Loss of Phase Voltage Error	Non-Fatal Error	ERR **-2----**
TOU Schedule Error	Non-Fatal Error	ERR **--3---**
Reverse Power Flow Error	Non-Fatal Error	ERR **---4--**
Load Profile Error	Non-Fatal Error	ERR **----5-**
Fullscale Exceeded	Non-Fatal Error	ERR **-----6**
Valid Service Not Found (SiteScan Error)	Non-Fatal Error	ERR **--9---**
Diagnostics 1	Diagnostic	**diA 1-----**
Diagnostics 2	Diagnostic	**diA -2----**
Diagnostics 3	Diagnostic	**diA --3---**
Diagnostics 4	Diagnostic	**diA ---4--**
Diagnostics 5	Diagnostic	**diA ----5-**

A fatal error indicates an internal meter problem, which ceases all meter functions except communications. These errors cause the display to lock on the error code until the meter is re-initialized.

The non-fatal errors can indicate either a meter problem such as low battery error or a site problem such as the loss of phase voltage error. The non-fatal self-diagnostic checks can be independently enabled or disabled through the PC-PRO+ Advanced software.

SiteScan Toolbox Mode

SiteScan Toolbox Mode displays all the metering information used by the meter for individual phase measurements and system and installation diagnostic checks. This information helps the user verify that the meter is installed and operating correctly. The per-phase RMS voltage and current readings along with both voltage and current angle readings let the user check the meter's site phase sequencing performance. The diagnostic counters alert the user to the frequency of a metering installation or tampering problem. The combination of a diagnostic error and the information in the Toolbox Mode display will greatly enhance the ability to diagnose and resolve metering or tampering issues.

DRAFT

The PC-PRO+ Advanced software lets the user retrieve Toolbox information (the same information available by accessing the display list through the use of a magnet and magnetic switch) on an instantaneous basis with a graphical vector diagram.

To best understand the values on the Toolbox display, one should graphically plot this information. Before starting to manually plot the Toolbox data, two basic definitions must be understood about the SiteScan system.

Definition 1: The per-phase information displayed in the Toolbox Mode is referenced to the internal voltage and current sensors of the meter. The meter will designate each phase by the elements. The table below defines each element.

Phase Notation in Display		
Element Used in Meter	**Defined Phase**	**Phase Notation in Toolbox Display**
Left-hand Element	Phase A	PhA
Center Element	Phase B	PhB
Right-hand Element	Phase C	PhC

The figure below shows how the wiring of each element determines the phase notation used by the meter. (socket view)

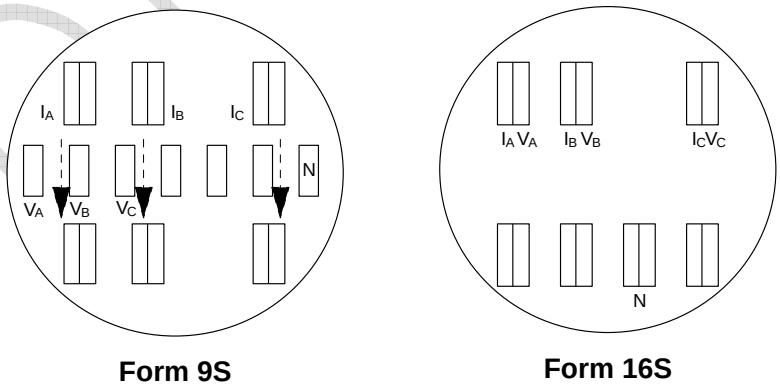

Figure 25: Toolbox Phase Notation for Form 9S and 16S CENTRON Polyphase Meters

DRAFT

Definition 2: The SiteScan system uses the A phase voltage as a reference point. Therefore, the Toolbox Mode display of the A phase voltage angle will always be 0.0°V. The CENTRON Polyphase meter is still determining this angle and will still detect a problem if the A phase voltage angle is incorrect.

A phase angle variations will manifest as errors in the other phases.

After the meter sets the A phase voltage direction to 0.0 degrees, the meter calculates all the other voltage and current angles relative to the A phase voltage. This allows the user to easily plot the vector information, not only to determine problems, but also to determine the phase sequencing of the site.

The figure below provides an example of the plot for Toolbox Mode information. No matter how the phasor information is plotted, whether the user plots the same as shown in the figure below or in the opposite direction with 90° at the 12 o'clock position, the Toolbox Mode will still provide an accurate representation of the site.

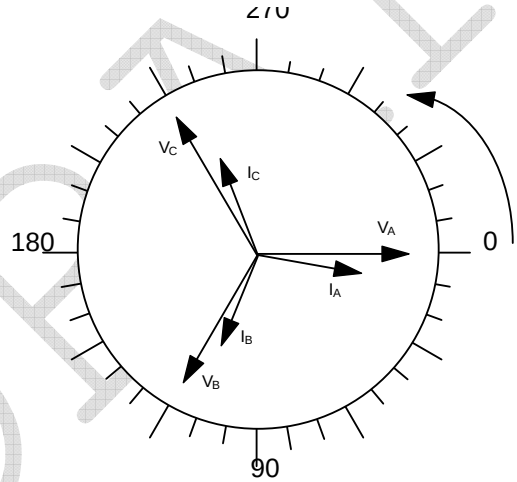

Figure 26: Plot of Toolbox Display Mode

In this example, the plot is going in the clockwise direction. Therefore, the phasors will be rotating in the counterclockwise direction. By using this information, the phase sequencing of the meter site can be determined. In the case shown, the A phase voltage is seen first. The next voltage phasor is B phase and last is C phase voltage, indicating ABC rotation. For CBA rotation, A phase voltage at zero will be seen first, but the user would see C phase voltage next followed by B phase.

DRAFT

The following is an example of the data available in the Toolbox Mode. This example is for a Form 9S meter wired for a 4-Wire Wye system:

	Phase A Display (Left Element)	Phase B Display (Center Element)	Phase C Display (Right Element)
Voltage Phase Angles	PhA 0.0° V	PhB 120.5° V	PhC 240.3° V
Phase Voltage	PhA 120.2 V	PhB 115.5 V	PhC 119.3 V
Current Phase Angles	PhA 9.0° A	PhB 117.8° A	PhC 246.0° A
Phase Current	PhA 6.8 A	PhB 10.2 A	PhC 9.8 A
Diagnostic Counters[1]	d1 000 d2 000 d3 000 d4 000 d5A 000 d5B 000 d5C 000 d5T 000		

1 The diagnostic counters are incremented each time a diagnostic error occurs.

If the magnitude of a phase voltage or current is zero or too low to measure accurately, a dashed line (---) will appear in the value location. The corresponding angle will also indicate dashed lines. Accurate measurement is considered to be 0.5% of class rating for the current:

- CL 20 = 10 mA
- CL 200 = 1 Amp
- CL 320 = 1.6 Amps

By following the definitions of the SiteScan system and the information on the Toolbox display, the above example can be graphically plotted into the phasor diagram shown in the figure above.

By simply viewing the phasor diagram, several facts about the site become clear:

- There are no wiring problems currently at the site.
- Both A and C phase currents lag while B phase current leads its voltage.
- The site is wired with ABC phase rotation.

By graphically plotting the Toolbox Mode display information, many metering site problems are easily diagnosed. Problems such as cross-phasing of voltage or current circuits, incorrect polarity of voltage or current circuits, and reverse energy flow of one or more phases can be found quickly. The load emulator scrolling in the direction of energy flow for each phase will also aid in checking for reverse energy flow. Other problems, such as loss of phase voltage, incorrect voltage transformer ratio, current diversion, or a shorted current transformer circuit, can be determined through the Toolbox Mode.

While some of these problems may occur at the time of meter installation, others may happen at any time after the meter is installed. Since it is impossible to continuously watch the Toolbox Mode information, the SiteScan on-site monitoring system has been designed to continuously monitor the site. The occurrence of any diagnostic condition can be logged, as well as display error codes on the LCD.

DRAFT

SiteScan System and Installation Diagnostic Checks

The SiteScan on-site monitoring system has the ability to continuously monitor the site for metering installation or tampering problems through the system and installation diagnostic checks. The following software programmable diagnostic checks are available:

SiteScan Diagnostic #1	Cross-Phase, Polarity & Energy Flow Check—This diagnostic verifies that all meter elements are sensing and receiving the correct voltage and current angles for each phase of a specific polyphase electric service. The limits are +/- 10 degrees for voltage and +/- 90 degrees for current.
SiteScan Diagnostic #2	Phase Voltage Deviation Check—This diagnostic verifies that each individual phase maintains an acceptable voltage level with respect to the other phases. Problems such as shorted potential transformer windings, incorrect phase voltage, and loss of phase potential among others may be indicated.
SiteScan Diagnostic #3	Inactive Phase Current Check—This diagnostic verifies that each individual current phase maintains an acceptable current level. It may indicate problems such as current diversion and open or shorted circuits, among others.
SiteScan Diagnostic #4	Phase Angle Displacement Check—Similar to Diagnostic 1, but this diagnostic allows the user to define an acceptable angle displacement between the phase voltage and current. This diagnostic may indicate problems such as poor load power factor conditions, poor system conditions, or malfunctioning system equipment.
SiteScan Diagnostic #5	Current Waveform Distortion Check—This diagnostic detects the presence of direct current (DC) on any of the phases of the meter.

It is very important to note that the meter will continue to operate normally while any of the diagnostic errors are being displayed. The system and installation diagnostic checks will only report that there may be a problem with the site. They have no effect on metering or on any operations performed by the CENTRON Polyphase meter.

If enabled, all the diagnostic checks will continually check for errors every five seconds. The CENTRON Polyphase meter will not check for diagnostic errors under any of the following conditions:

- When single phase series conditions occur (Test Bench)
- When the meter is in Test Mode
- When the diagnostic(s) have been disabled by the programming software
- When auto service sense is configured the meter cannot determine the service type

DRAFT

The system reports diagnostic errors in several ways. If a diagnostic check is enabled and an error occurs, the system will always increment the corresponding diagnostic counter by one. The range for all diagnostic counters is from 0 to 255. When the counter reaches 255, it remains there until it is reset by the user. The diagnostic checks will continue to function and report any errors even after the diagnostic counter has reached 255. The PC-PRO+ Advanced programming software can be used to reset the counters. Refer to the PC-PRO+ Advanced documentation for instructions on how to reset the counters.

The system can also be programmed to display diagnostic errors similar to the one shown in the figure below.

Need New Photo...

If more than one diagnostic error condition exists, the meter will display a combined error message. Diagnostic errors will not be shown if any fatal or non-fatal errors are displayed.

Each of the diagnostic checks can be independently programmed with one of the following display options:

Disable	The diagnostic error will not be displayed on the meter display or increment the diagnostic counter.
Ignore	The diagnostic error will not be displayed on the meter. However, the diagnostic error will still increment the diagnostic counter. This option can be used to determine the frequency of an error without reporting it on the display of the CENTRON Polyphase meter.
Lock	The diagnostic error is locked on the display. Activating the magnetic switch for more than 4 seconds to select Normal, Alternate, or Toolbox display mode will cause the meter to scroll through that list and then lock again on the error.
Scroll	The diagnostic error will be displayed during the “Off Time” between display items. When an error occurs, the meter will display the error during the next and all subsequent “Off Time” of the current display mode (Normal, Alternate, or Toolbox).

The meter will check for all enabled diagnostic errors every five seconds. If three consecutive checks fail, the meter will flag the error. Therefore the meter takes approximately 15 seconds before an error is flagged. A diagnostic error may take longer to display on the meter depending on the display option chosen. Once the condition causing the error is corrected, the meter must pass two consecutive checks before the diagnostic error is cleared from the display.

DRAFT

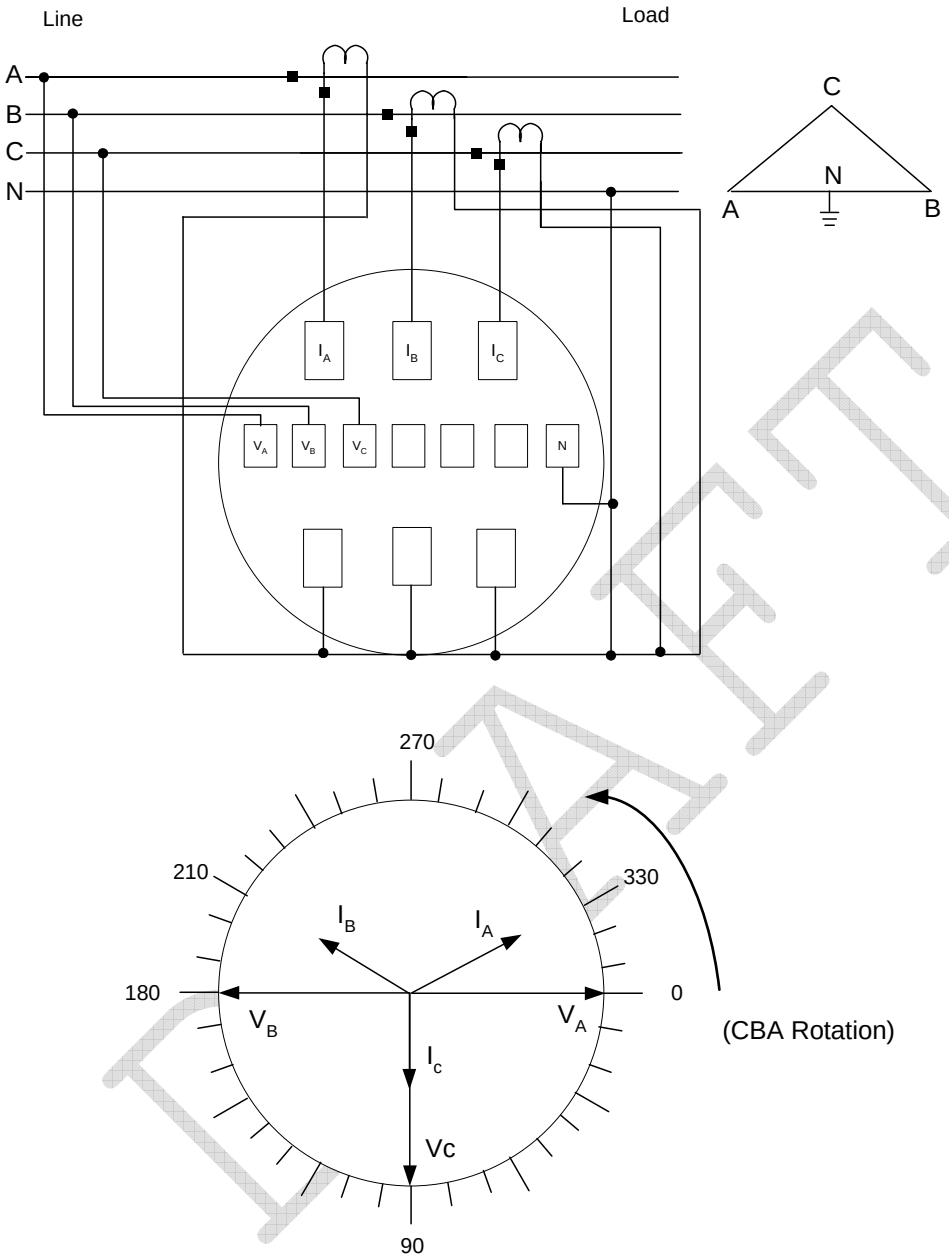

Expected vector diagram at unity power factor with load connected line-to-neutral

Figure 27: Form 9S CENTRON Polyphase Meter 4-Wire Delta Phasor Diagram

DRAFT

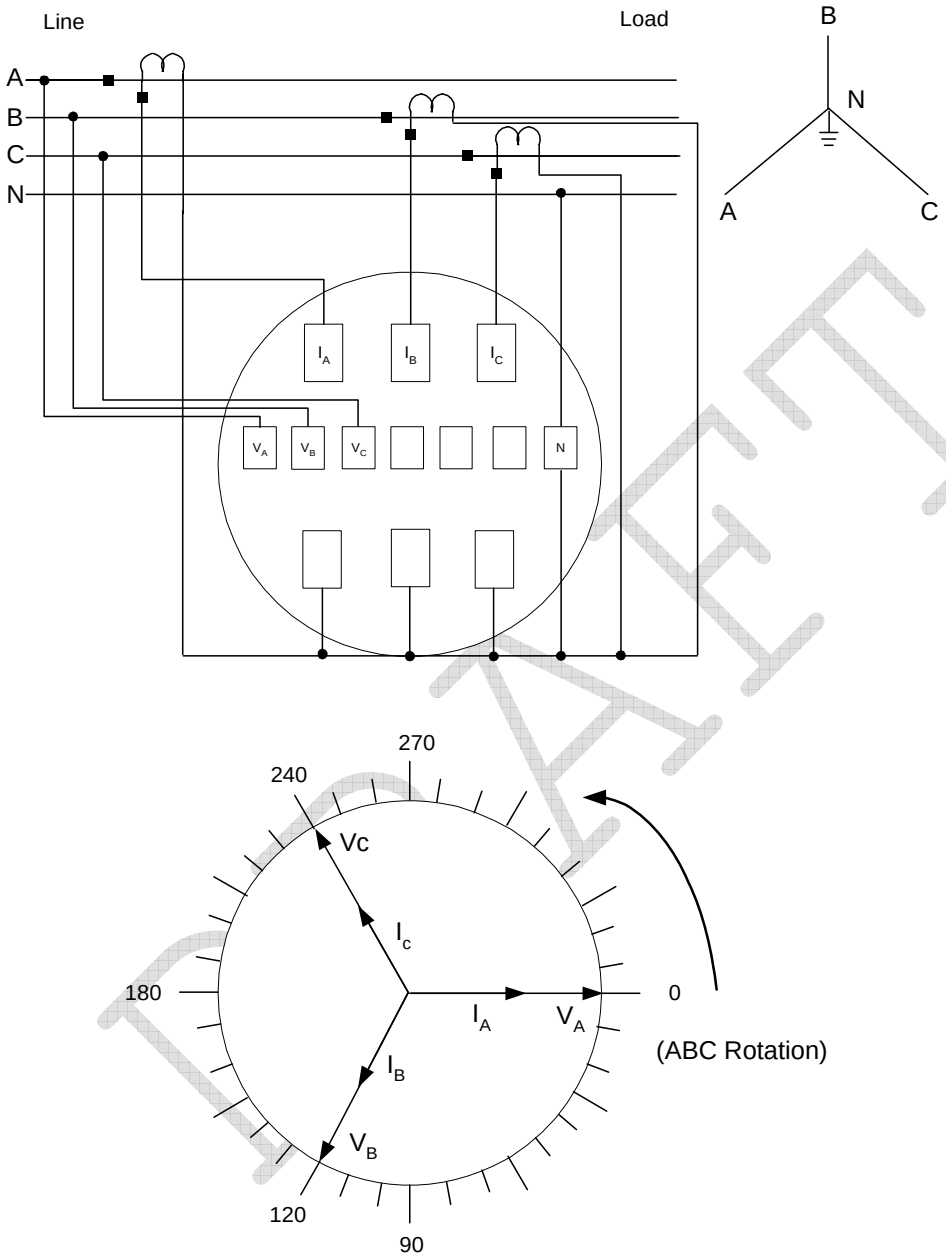

Figure 28: Form 9S CENTRON Polyphase Meter 4-Wire Wye Phasor Diagram

DRAFT

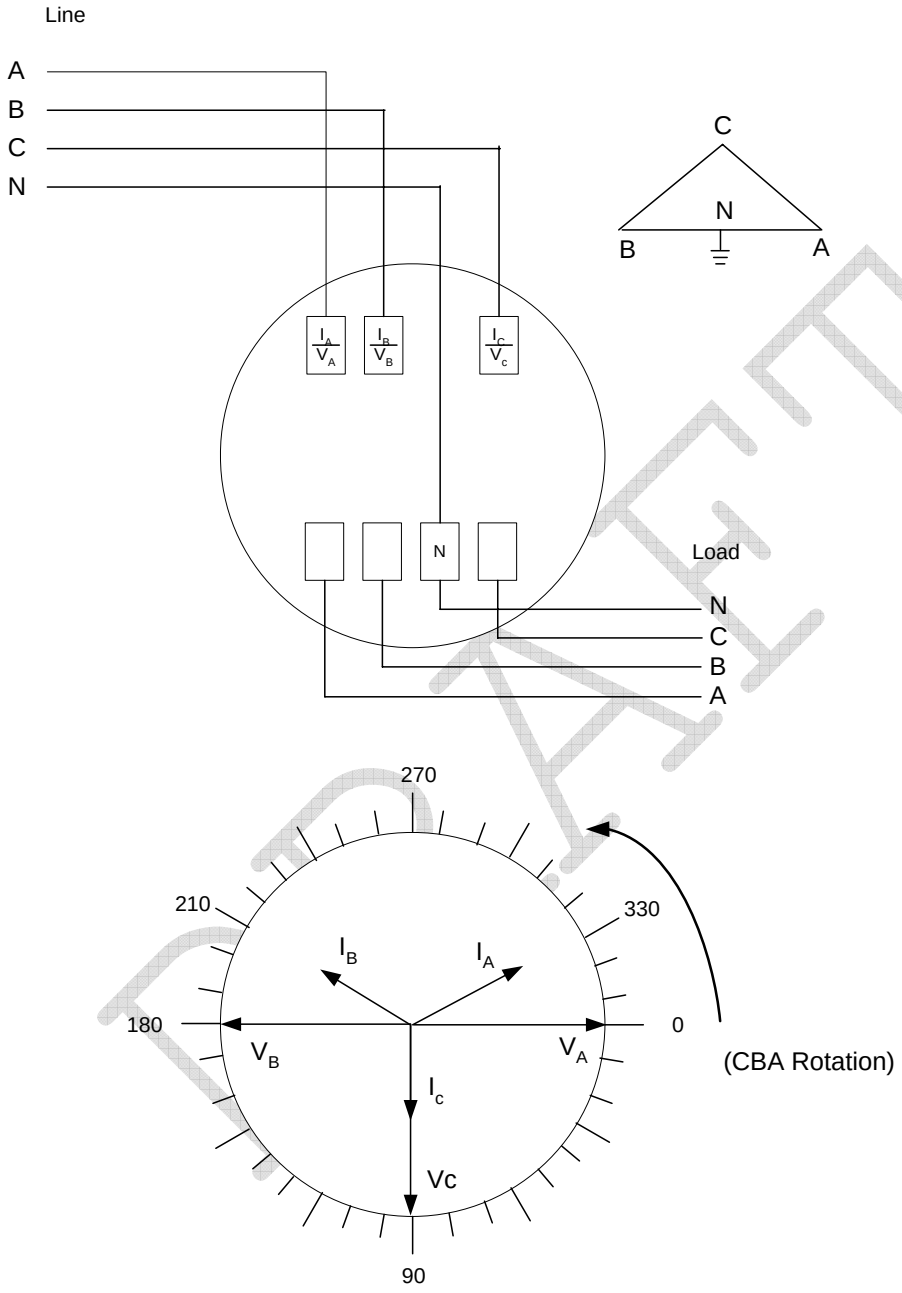

Figure 29: Form 16S CENTRON Polyphase Meter 4-Wire Delta Phasor Diagram

DRAFT

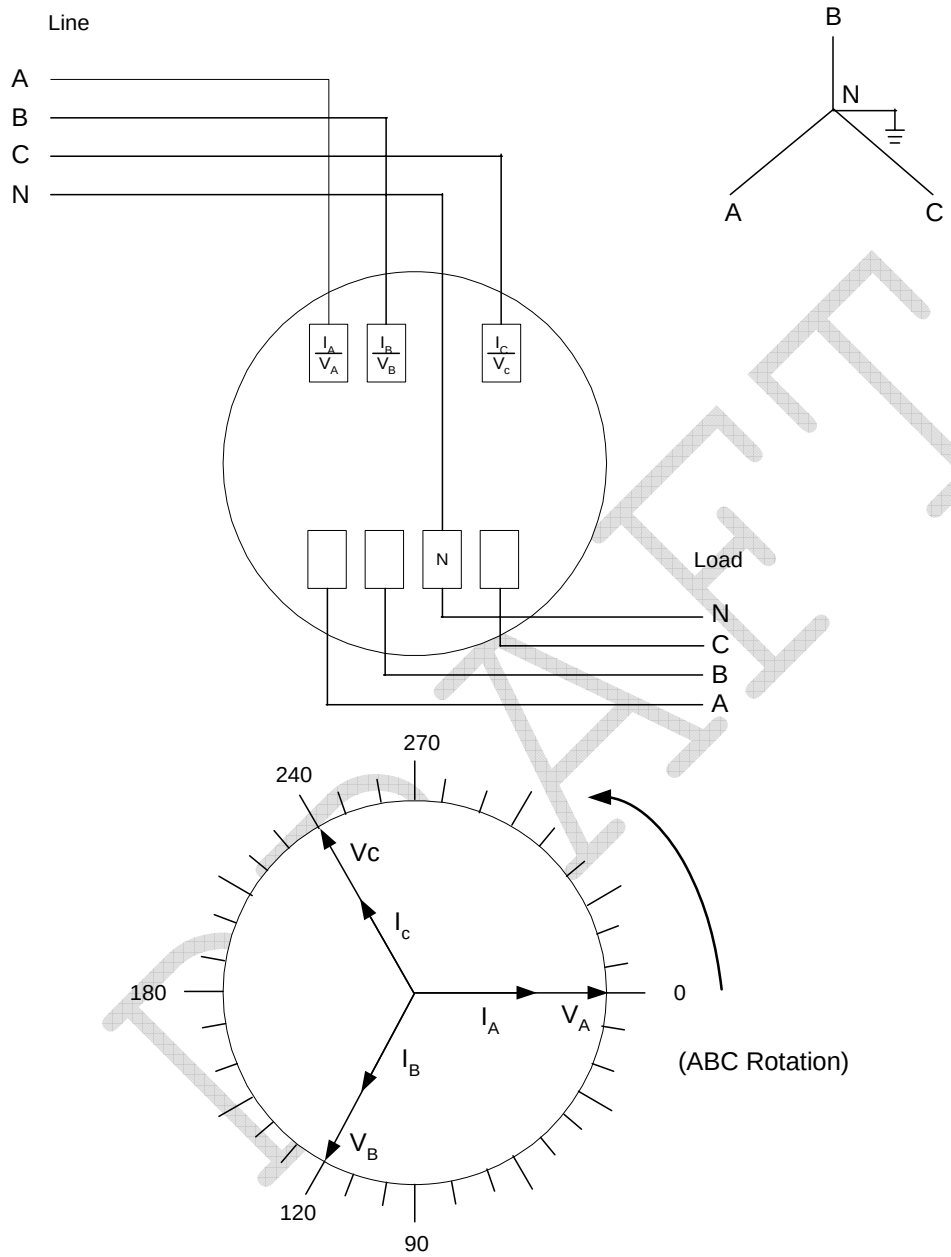

Expected vector diagram at unity power factor with load connected phase-to-neutral

Figure 30: Form 16S CENTRON Polyphase Meter 4-Wire Wye Phasor Diagram

DRAFT

SiteScan Diagnostic #1

The purpose of this diagnostic is to verify that all meter elements are sensing and receiving the correct voltage and current for each phase. This diagnostic may indicate one or more of the following problems:

- Cross-phasing of a voltage or current phasing
- Incorrect polarity of a voltage or current circuit
- Reverse energy flow of one or more phases
- Internal meter measurement malfunction
- Faulty site wiring

This error will not be reported when the meter is in a serial test configuration since this is considered as a “valid” 3-element 4-wire Y service.

The voltage and current angles are determined with respect to phase A voltage, and compared to a pre-established service diagram, according to the current meter service in use. A lag and lead tolerance is entered as a parameter for the current and voltage angles.

Current Angle Tolerance

The SiteScan Current Angle Tolerance configurations in PC-PRO+ Advanced are the lead and lag tolerances for current angles associated with Diagnostic #1. The range of adjustment is from 90 to 120 degrees both lag and lead direction.

Cross-Phase, Polarity, and Energy Flow Check

Although the diagnostic checks occur every 5 seconds, once every second the meter determines the angle of each voltage and current phasor with respect to VA. The meter will not only display this information in the Toolbox Mode, but will determine each phasor angle for validity with respect to the meter’s form and service type. Diagnostic #1 will take the “typical” phasor diagram for a particular form number and service type and place an envelope around each phasor where the actual phasor must be found for the diagnostic check to pass. The envelope for the voltage vectors is fixed at ±10° and the envelope for the current vectors is fixed at ±100°. The meter will recognize ABC or CBA phase rotation and will adjust the SiteScan expected values.

For example, if a typical diagram has the B phase voltage angle at 120°, and the envelope around that phasor is ±10°, then the actual phasor must be between 110° to 130° from VA for the diagnostic check to pass. The system will check each phasor in a similar fashion. The system will define the phasor envelope for each phase.

Figure 7.4 through Figure 7.13 show the ideal phasor diagrams for all possible form numbers and service types. These vector relationships assume site wiring as shown and the special case of unity power factor with balanced phase loading.

DRAFT

A multitude of wiring conventions, phase loadings, and power factors can exist at metering sites. Therefore, the vector diagrams obtained from actual metering sites will most likely vary from those shown here. This should be expected and will cause no metering errors, but some unusual circumstances could necessitate reconfiguration of one or more of the diagnostics. For more information on SiteScan reconfiguration, refer to the PC-PRO+ Advanced documentation.

Diagnostic #1 Error Example

This example is for a Form 9S meter wired for a 4-Wire Wye system with ABC phase rotation, but the site was wired with a voltage circuit having the incorrect polarity (reverse VT).

The first step of diagnosing an error is to place the meter into the Toolbox Mode and gather the information.

The following is the information from the SiteScan snapshot when the Diagnostic #1 error is triggered:

	Phase A Display (Left Element)	**Phase B Display (Center Element)**	**Phase C Display (Right Element)**
Voltage Phase Angles	PhA 0.0° V	PhB 301.2° V	PhC 240.3° V
Phase Voltage	PhA 120.2 V	PhB 120.5 V	PhC 119.3 V
Current Phase Angles	PhA 9.0° A	PhB 125.5° A	PhC 246.0° A
Phase Current	PhA 6.8 A	PhB 10.2 A	PhC 9.8 A
Diagnostic Counters	**d1 001** d2 000 d3 000 d4 000 d5A 000 d5B 000 d5C 000 d5T 000 d6 000		

The next step is to graphically plot the above information into a phasor diagram as shown in the figure below.

DRAFT

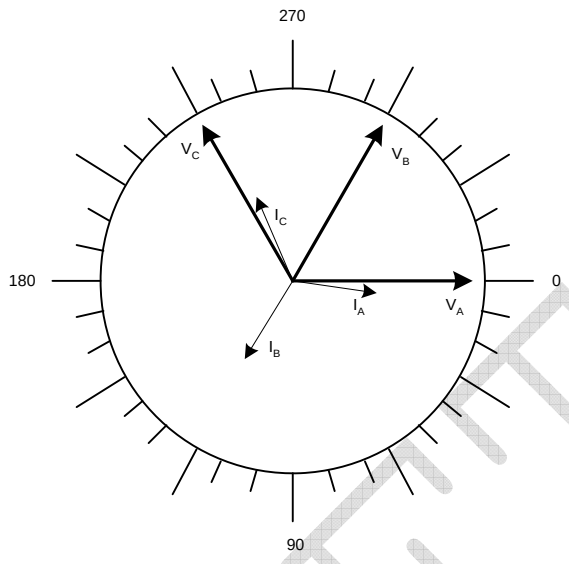

Figure 31: Diagnostic #1 Error Diagram

By comparing the phasor diagram drawn from the information found in the snapshot with the typical phasor diagram, it becomes clear that the B phase voltage is incorrect. The correct phasor should be around 120°, not 300° where the phasor currently is. Since the phasor is approximately 180° off, this most likely represents a polarity problem with the B phase voltage circuit. Also note that diagnostic counter d1 has incremented to “001”.

SiteScan Diagnostic #2

The purpose of this diagnostic is to verify that each individual phase maintains an acceptable voltage level with respect to phase A. Because Phase A is present in all the configurations, it is chosen as the reference level. This diagnostic check may indicate one or more of the following problems:

- Loss of phase voltage
- Incorrect voltage transformer ratio
- Shorted voltage transformer windings
- Incorrect phase voltage
- Internal meter measurement malfunction
- Faulty site wiring

The percentage of deviation tolerated from phase A voltage is the user-defined parameter used for this test. All other phases are compared to phase A, to see if it is within the defined voltage tolerance.

DRAFT

Phase Voltage Deviation Check

Once every five seconds, the phase A voltage is combined with a user-defined percentage tolerance (x) to determine the upper and lower bounds of the acceptable range for the other voltages. The range of values for the percent tolerance is 1 to 25.

For Diagnostic #2 to pass, the following equations must be satisfied:

$$V_B \text{ upper} \leq (1 + x\%) \bullet V_A \text{ and } V_B \text{ lower} \geq (1 - x\%) \bullet V_A$$

$$V_c \text{ upper} \leq (1 + x\%) \bullet V_A \text{ and } V_C \text{ lower} \geq (1 - x\%) \bullet V_A$$

If the above equations are not met for three consecutive checks, the diagnostic check will trigger. Although the meter is using VA as a reference voltage, it does not need to be correct for this check to be valid. The percentage difference is the determining factor.

Diagnostic #2 Error Example

This example is for a Form 9S meter wired for a 277 Volt, 4-Wire Wye system, but the site has an incorrect voltage transformer ratio. The meter was also programmed with a percentage tolerance of 10%.

The following is the information from the SiteScan snapshot when the Diagnostic #2 error is triggered.

	Phase A Display (Left Element)	**Phase B Display (Center Element)**	**Phase C Display (Right Element)**
Voltage Phase Angles	PhA 0.0° V	PhB 119.4° V	PhC 240.9° V
Phase Voltage	PhA 119.2 V	PhB 275.4 V	PhC 279.1 V
Current Phase Angles	PhA 9.0° A	PhB 125.5° A	PhC 246.0° A
Phase Current	PhA 6.8 A	PhB 10.2 A	PhC 9.8 A
Diagnostic Counters	d1 000 **d2** **001** d3 000 d4 000 d5A 000 d5B 000 d5C 000 d5T 000 d6 000		

The second step to diagnose a Diagnostic #2 error is to compare the different phase voltage readings. This can be done several ways by simply comparing the readings or plugging the values into the equation. In this case, A phase is about 120 volts while both B and C phases are about 277 volts. This could indicate an incorrect voltage transformer ratio or a shorted voltage transformer winding for the A phase transformer. This could also indicate that A phase is correct and both B and C phases are incorrect. Also note that diagnostic counter d2 has incremented to “001”.

DRAFT

By using the equations above and substituting in the voltages for the upper and lower limits, one can also see why the diagnostic check has failed. For Diagnostic #2 to pass, the following equations must be satisfied:

$$275.4 < (1+10\%) \bullet 119.2 \text{ and } 275.4 > (1-10\%) \bullet 119.2$$
$$275.4 < 131.1 \text{ and } 274.5 > 107.3$$

and

$$279.1 < (1+10\%) \bullet 119.2 \text{ and } 279.1 > (1-10\%) \bullet 119.2$$
$$279.1 < 131.1 \text{ and } 279.1 > 107.3$$

One can see in the above equations that 275.4 and 279.1 are not less than 131.1. Further investigation can begin on the circuit to determine the cause of the problem.

SiteScan Diagnostic #3

The purpose of this diagnostic is to verify that each individual phase current maintains an acceptable current level with respect to the others. This diagnostic check may indicate one or more of the following problems:

- Current diversion
- Open or shorted current transformer circuit
- Internal meter measurement malfunction

During the test, if one or more currents fall below the user defined “low current threshold”, and at least one current is above this level, then a diagnostic error is triggered.

Inactive Phase Current Check

Diagnostic #3 checks every five seconds to verify that the meter is receiving a configured current level for each individual phase. If the meter fails three consecutive checks, the Diagnostic #3 check will trigger.

Once every five seconds, all phase currents are checked against a user-defined “low current value” to verify that the current value is above this value. If one or more currents fall below the low current value, *and* at least one current remains above this value for 3 consecutive checks, the CENTRON Polyphase meter will trigger the error. The error will not be triggered if all the currents fall below or above the user-defined value.

The starting current of:

- transformer rated meters, CL 20, is 5 mA.
- self-contained meters, CL 200, is 50 mA.
- the CL320 version is 80 mA.

Therefore, a selected “low current value” of 100 mA would require at least one phase above and below the starting current in order to activate the diagnostic.

DRAFT

Refer to the PC-PRO+ Advanced documentation for instructions on how to program this value into the CENTRON Polyphase meter.

Diagnostic #3 Error Example

This example is for a Form 9S meter wired for a 277 volt, 4-Wire Wye system, but the site has a shorted current transformer. The “low current value” is set at 25 mA.

The following is the information from the SiteScan snapshot when the Diagnostic #3 error is triggered.

	Phase A Display (Left Element)	**Phase B Display (Center Element)**	**Phase C Display (Right Element)**
Voltage Phase Angles	PhA 0.0° V	PhB 119.4° V	PhC 240.9° V
Phase Voltage	PhA 276.2 V	PhB 277.7 V	PhC 277.0 V
Current Phase Angles	PhA 9.0° A	PhB ---------	PhC 246.0° A
Phase Current	PhA 11.8 A	PhB ---------	PhC 5.2 A
Diagnostic Counters	d1 000 d2 000 **d3** **001** d4 000 d5A 000 d5B 000 d5C 000 d5T 000 d6 000		

The second step to diagnose a Diagnostic #3 error is to compare the different phase current readings. In this case A and C phases both have current passing through the elements while B phase (center element) has no current. The dashes indicate that current is zero or too low to measure accurately. Accurate measurement is considered to be 0.5% of class rating for the current:

- CL 20 = 10 mA
- CL 200 = 1 Amp
- CL 320 = 1.6 Amps

This could indicate an open or shorted current transformer or current diversion. Also note that diagnostic counter d3 has incremented to “001”.

It is possible to see dashes where the current information should be, but have no Diagnostic #3 error present. See the SiteScan Toolbox Mode for more information.

DRAFT

SiteScan Diagnostic #4

The purpose of this diagnostic is to verify that the current elements are sensing and receiving the correct current for each phase. It is basically a power factor check diagnostic. This diagnostic check may indicate one or more of the following problems:

- Poor load power factor conditions
- Poor system conditions
- Malfunctioning system equipment

Diagnostic #1 must be enabled and passed for this diagnostic to be enabled, so that the system can assume all the phasors are in the relatively correct orientation. Each phase must also exceed a configured minimum current threshold in order for it to be tested. Then the user-defined angle tolerance is the parameter used to check the phasors.

Low End Threshold Current

The low end threshold current for Diagnostic #4 is adjustable based upon the class of the meter from 0.5% of class to 5% of class.

Phase Angle Displacement Check

Diagnostic #1 must be enabled and must pass for Diagnostic #4 to be enabled and check for a problem. This will allow the system to make the assumption that all the phasors are in the relatively correct orientation and that there is no wiring problem. Since the voltage angles passed Diagnostic #1, the meter will assign the voltage phasors to be constant at the typical phasor angle.

If Diagnostic #1 passes, the meter will then determine the angle of each current phasor with respect to VA for Diagnostic #4. The meter will monitor each current phasor angle for validity with respect to the meter's form number and service type. Diagnostic #4 will take the "typical" phasor diagram at unity PF for a particular form number and service type and place a user-defined envelope around each current phasor, where the actual phasor must be found for the diagnostic check to pass.

DRAFT

An example would be if a typical diagram has the C phase current angle at 240° and the user has programmed an acceptable envelope of ±45° around that phasor, then the actual current phasor must be between 195° to 285° from VA for the diagnostic to pass that check. The system will check each current phasor in a similar fashion. Here, the current vector must be within ±45° of the voltage vector for Diagnostic #4 to pass.

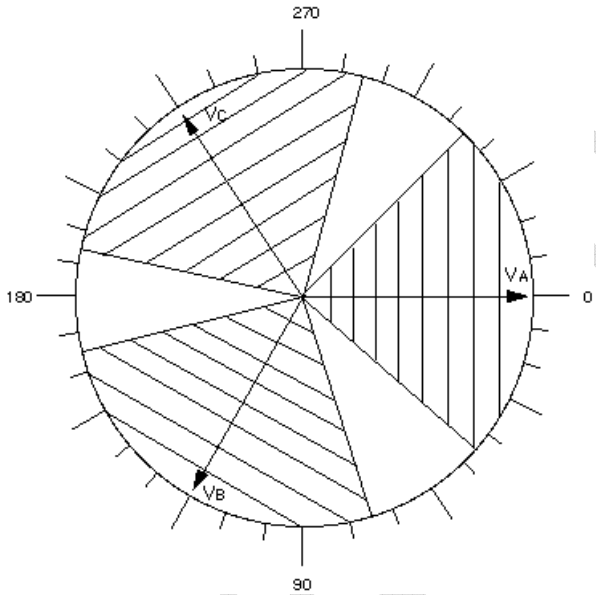

Figure 32: Envelope Example

Diagnostic #4 Error Example

This example is for a Form 9S meter wired for a 4-Wire Wye system with ABC phase rotation, but the site has a poor load power factor condition. The meter was programmed with a tolerance level of ±45° for Diagnostic #4 and Diagnostic #1 was also enabled and has already passed.

The following is the information from the SiteScan snapshot when the Diagnostic #4 error is triggered.

	Phase A Display (Left Element)	Phase B Display (Center Element)	Phase C Display (Right Element)
Voltage Phase Angles	PhA 0.0° V	PhB 120.4° V	PhC 239.8° V
Phase Voltage	PhA 120.8 V	PhB 120.0 V	PhC 119.3 V
Current Phase Angles	PhA 2.0° A	PhB 119.8° A	PhC 297.2° A
Phase Current	PhA 6.8 A	PhB 10.2 A	PhC 9.8 A
Diagnostic Counters	d1 000 d2 000 d3 000 **d4 001** d5A 000 d5B 000 d5C 000 d5T 000 d6 000		

The next step is to graphically plot the above information into a phasor diagram as shown in the figure below.

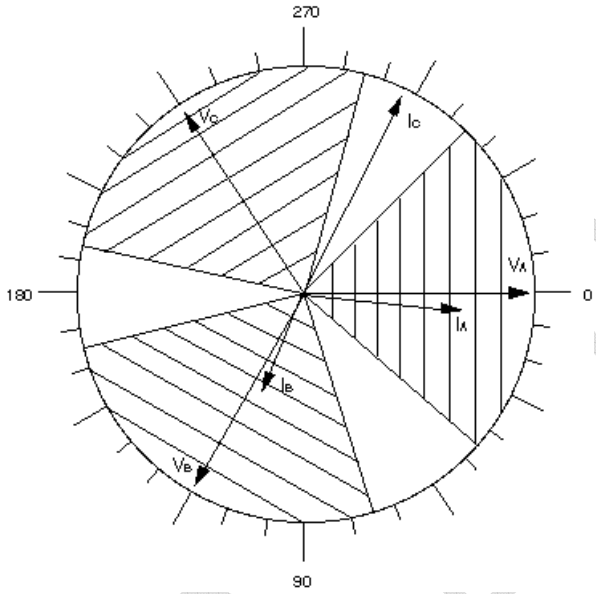

Figure 33: Phasor Diagram

By comparing the phasor diagram drawn from the information found in the snapshot versus the typical phasor diagram, it becomes clear that the C phase current is out of the user-defined envelope. The correct phasor should be around 240.0°, not the 297.0° where the phasor currently is. This is not a problem with the meter or a wiring problem at the site, but it does indicate a poor load power factor condition which may need to be corrected. Also note that diagnostic counter d4 has incremented to “001”.

SiteScan Diagnostic #5

The purpose of this diagnostic is to check for the presence of DC on any of the current phases. If DC is present on a phase, depending on the amount, this can adversely affect the metering of power on that phase. The DC has the affect of distorting the waveform seen on the secondary side of the CT.

A DC index is calculated for every current phase present for a given service. This index is compared against a threshold that was established through extensive data analysis applying different loads to the CTs and evaluating the DC Index. If a DC Index is found above the threshold, then this is a single failure. As with the other diagnostics, there must be failures on three consecutive checks before a failure is registered.

Current Waveform Distortion Check

Diagnostic #5 detects DC on a per-phase basis using what is know as a comb filter method. Rectified loads produce even harmonics which are typically in phase with the voltage signal. The algorithm works by summing current samples, which occur 90° after every zero crossing of the voltage waveform. This information is accumulated for a sample interval. These sample points should represent peak current values. If no DC is present on any of the phases, the current waveforms will be symmetrical and the accumulation of the current samples will be near zero. If DC is present on a phase, the current waveform is offset vertically and the accumulation of the current samples will be significantly higher.

Diagnostic #5 will trigger when the level of DC present is such that the accuracy of the CENTRON Polyphase meter could be affected. This level varies for different installations based on the per-phase load conditions. When DC current is present, the CENTRON Polyphase meter can be programmed to display the Diagnostic #5 error code (i.e. lock, scroll, ignore). The number of times DC was present is available through meter communications on a per-phase basis. The number of times that DC was present on all phases is available by accessing the Toolbox Mode and viewing the Diagnostic #5 counter or through meter communications.

SiteScan Diagnostic #6

The purpose of this diagnostic is to check for the presence of harmonic distortion.

Unlike the other diagnostics, Diagnostic #6 has a programmable minimum duration before the condition is triggered. The minimum duration may be programmed from 5 to 3600 seconds in increments of 5 seconds.

The check is performed every 5 seconds. It compares the instantaneous %THD V for each phase against a configured threshold and it compares the instantaneous %TDD I for each phase against a configured threshold. The %THD V threshold and the %TDD I threshold may both be configured from 1.0 to 35.0.

Once the condition occurs, the check must pass twice in a row for the condition to clear.

Diagnostic #6 Error Example

The following is the information from the SiteScan snapshot when the Diagnostic #6 error is triggered.

	Phase A Display (Left Element)	Phase B Display (Center Element)	Phase C Display (Right Element)
Voltage Phase Angles	0.00	119.20	239.20
Phase Voltage	120.875	120.000	120.150
Current Phase Angles	359.10	118.40	237.50
Phase Current	5.8	6.0	5.9
%THD V	0.330	7.730	0.280

DRAFT

	Phase A Display (Left Element)	Phase B Display (Center Element)	Phase C Display (Right Element)
%TDD I	0.010	0.500	0.500
Diagnostic Counters	d1 0 d2 0 d3 0 d4 0 d5A 0 d5B 0 d5C 0 d5T 0 d6 1		

The snapshot data indicates that there was harmonic distortion on Vb. Also note that the diagnostic counter d6 has incremented to 1.

Testing, Troubleshooting, and Maintenance

This section provides information and instructions to help you test and maintain the CENTRON Polyphase meter. Topics covered include:

- Visual indicators
- Energy testing
- Demand testing
- Recommended testing procedures
- TOU schedule testing
- Field testing
- Troubleshooting (fatal and non-fatal errors)
- Maintenance

Visual Indicators

The Infrared Test LED, as well as several other annunciators, assist you in testing and troubleshooting the CENTRON Polyphase meter.

Infrared Test LED

The meter is equipped with an Infrared (IR) Test Light Emitting Diode (LED) for testing meter accuracy; the LED is located at the top of the meter. The pulse weight represented by the LED is programmable through the PC-PRO+ Advanced programming software for a CP1SDTL meter. The programming software allows a different pulse weight value for the LED in the following display modes: Normal, Alternate, Test, and Test Alternate. The meter can be programmed to drive the Test LED with a variety of energy values, depending upon the energy quantities selected in the configuration.

Annunciators

The CENTRON Polyphase meter is equipped with a variety of annunciators for a more meaningful display.

DRAFT

Load Indication/Direction Annunciator

The CENTRON Polyphase meter is equipped with a Liquid Crystal Display (LCD) load emulation indicator. The Load Emulator follows the Infrared Test LED. For each pulse of the Test LED, the Load Emulator increments one segment. The operation of the Load Emulator depends on the quantity being pulsed.

- If the quantity being pulsed is “Delivered-Only”, then the Load Emulator scrolls to the right when energy is being delivered and lights the left arrow when energy is being received.
- If the quantity being pulsed is “Received-Only”, then the Load Emulator scrolls to the left when energy is being received and lights the right arrow when energy is being delivered.
- If the quantity being pulsed is “Delivered and Received”, then the Load Emulator scrolls to the right when energy is being delivered and scrolls to the left when energy is being received.

When the meter is in Toolbox mode, the Load Emulator does not follow the Test LED. Instead, the operation of the Load Emulator depends on the quantity that is currently being displayed. If the quantity being displayed is a Phase quantity, then the Load Emulator scrolls to the right if energy flow on that phase is currently delivered or scrolls to the left if energy flow on that phase is currently received. If the quantity being displayed is a Diagnostic Counter, then the Load Emulator is turned off.

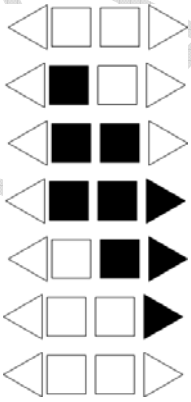

Figure 34: Load Emulator Segment Progression

Phase-Voltage Indication Annunciators

The CENTRON Polyphase meter is equipped with three LCD voltage indicator annunciators. They are located in the lower left portion of the LCD display. Illuminated annunciators (VA, VB, and VC) indicate active voltage for these respective phases. Depending on how the user configures the meter, a loss of voltage may be indicated with either a missing or flashing annunciator.

DRAFT

Nominal Voltage Indication Annunciator

The CENTRON Polyphase meter is equipped with a nominal voltage indication annunciator. This annunciator indicates the voltage value to which the nominal voltage is nearest. Nominal voltage indication values are 120, 240, 277, and 480.

Test Mode Annunciator

The CENTRON Polyphase meter is equipped with a Test Mode LCD annunciator. Located in the lower left portion of the display, this annunciator is present when Test Mode or Test Alternate Mode is activated. The word “TEST” appears on the display during Test Mode activation. The words “ALT” and “TEST” appear on the display during Test Alternate Mode activation. The “TEST” annunciator will also flash when the meter is in Toolbox Mode.

Energy Testing

The CENTRON Polyphase meter is a CL 0.2 accurate meter and requires no calibration adjustments. Verification of accuracy of energy and demand may be verified in many ways.

Testing With the Infrared Test LED

Verification of metered energy values by the meter can be accomplished by using the pulsing infrared LED located in the 3 o’clock position of the faceplate.

With a constant load applied, the IR LED pulses are compared to the output of a conventional high accuracy watthour standard. This is accomplished using an IR-compatible optical pickup device and a pulse counter.

Follow these steps to test the Wh with the LED:

1. Program the meter with the desired pulse quantity(s) and pulse weight(s) Ke.
2. Apply a constant delivered watts load (Wapp) to the meter.
3. Verify that the LED pulses properly either by counting the pulses or using a pulse counter to compare pulses from the meter under test to the standard. To determine the number of pulses per second, use the following equation:

$$\#\ pulses\ per\ second = W_{app} \bullet N \bullet \frac{1\,hour}{3600\,seconds} \bullet \frac{1}{Ke}$$

where *N* is the coil factor for single phase test method as shown in the table below.

If the meter is being tested using single phase test methods, a coil factor must be included in the calculations. See the table below for the appropriate factor.

Meter Coil Factors				
Form	**Series**	**A Phase Only**	**B Phase Only**	**C Phase Only**
9(8)[1], 16(15,14)	3	1	1	1

1 When testing under true polyphase conditions, Forms 9 and 16 can only be tested as a 4-Wire Wye. These forms cannot be tested as 4-wire deltas because of present limitation inherent in the test equipment.

If accuracy or repeatability is poor, the Kh may be incorrect or the "settling time" in the test bench must be adjusted. (Itron recommends a 4–5 second settling time.)

Testing Using the Load Indication Annunciator

The CENTRON Polyphase meter is capable of visually being tested by using the load emulation annunciator shown in Load Indication/Direction Annunciator. As further discussed in the load emulation annunciator section, the load emulation annunciator scrolls at a rate proportional to the programmed energy constant.

Testing Using the Energy/Time Method

As an alternate to the above methods, the energy accumulated by the registers and a reference standard can be read directly from the display and compared over a period of time. Energy readings displayed while the meter is in the Test Mode are in floating decimal format. This will result in maximum resolution for short duration tests.

Recommended Energy Testing Procedures

Testing solid-state meters on test boards designed primarily for electromechanical meters may sometimes give unexpected results. Erroneous readings could occur on light-load (LL) tests when the test sequence calls for a light-load test following a full-load (FL) or power-factor (PF) test. In some cases, PF readings could also be in error when following a FL test. The errors are always positive and may be a few percent for PF and even greater for LL. The problem is aggravated on lower voltages and when using large test constants, Kt, similar to the typical Kh values of comparable induction meters. This problem does not exist on modern test boards with their latest software.

Test Description

A typical meter test sequence consists of:

1 The voltage and current ramp up at unity power factor to the FL level.

2 A pulse from the meter starts the FL test and another pulse ends it.

3 The phase angle then changes for the PF test. The current may stay at the FL level or ramp down to zero and back up for the phase angle change.

4 A pulse from the meter starts the PF test and another pulse ends it.

DRAFT

5. The current ramps (directly or through zero) to the LL current level at unity power factor.
6. A pulse from the meter starts the LL test and another pulse ends it.

Most test boards use jogging (slewing) immediately following a FL or PF test to shorten the time required for the next test to start. The energy used for jogging may be more than enough to cause the next pulse from the meter even before the ramping of current or changing of phase angle is completed. If the trigger to start the next test is armed and ready during the jogging or transition to the next test level, an unexpected pulse may cause the test to start too soon. This obviously will result in erroneous readings. Some settling time is necessary for the test board power, the reference standard, and the meter under test to stabilize after the change to a new test level.

Most test boards provide a settling time (programmable or fixed) and will not recognize another test pulse following the completion of a test until the jogging, ramping, and settling time have all transpired. The CENTRON Polyphase meter needs a settling time of about three to five seconds after the new test level has been reached before the test starts.

Recommendations

Erroneous test results caused by the problems previously described can probably be corrected by implementing one of the following suggestions. Even if there are no bad readings, Solution 3 can cut the total test time significantly without sacrificing test verification certainty. The suggested solutions are:

1. Change the test sequence to avoid jogging before the light-load test.
2. Upgrade the test board to meet the requirements listed previously.
3. Program the meter and test board for a small test constant. This will avoid jogging and also give the added benefit of shorter test time.

Solution 1

This is the preferred solution, since it results in shorter test times and can be implemented simply by programming the meter for a smaller test constant and settling the test board accordingly.

The CENTRON Polyphase and most other solid-state meters have the capability of being programmed for a much smaller test constant (Kt), such as one-tenth or one-twelfth of the energy required for one “disk revolution” of the meter. With the test pulses running 10 to 12 times faster, there is the possibility of shortening the test time considerably, but not by a factor of 10 or 12. It still takes a finite amount of time to obtain meaningful results.

Solution 2

Change the test sequence so that the LL test is first, followed by the PF test and then the FL test. This should prevent all jogging from occurring between tests and will probably eliminate the erroneous readings. This is the quickest solution to implement since it requires no changes to the test board or the meter.

DRAFT

Solution 3

Install the latest test board software revision. A test board ideally should recognize no new test pulses after the completion of a test until jogging, ramping, and settling time have all transpired. Settling time should be programmed for three to six seconds. There is nothing to be gained by using settling times greater than six seconds.

Recommended Test Setup for Minimizing Test Time

The following settings are recommended for obtaining test uncertainties of less than 0.1% and at minimum test times:

1. Program the test board settling time for five seconds.
2. Program the meter and test board for a small test constant, Kt, in some convenient fractional value of the traditional Kh. For this example, 1/12 of the traditional Kh of the equivalent electromechanical meter is used. (The use of decimal values may be preferred for simplification of math.)
3. Use 12 pulses (1 rev) for FL.
4. Use 12 pulses for PF.
5. Use 1 pulse for LL.
6. For element tests, the FL and PF pulses can be divided by the number of elements, always rounding up for fractional values.

The total test time for a series FL, PF, LL sequence can be shortened by more than one minute compared to the time required for an electromechanical meter or a solid-state meter using the equivalent test constants. If LL element tests are used, the time savings will be much greater.

Recommendations for Minimum Variability

The variability of testing a CENTRON Polyphase meter can be reduced by lengthening the test times (using more pulses). Doubling or tripling the recommended minimum test time will reduce the variability by a factor of two or three. Very little improvement is realized by running longer than about 45 seconds for each test.

Demand Testing

Testing consists of comparing the readings displayed on the CENTRON Polyphase meter to the actual demand as determined using a high-accuracy RMS responding reference standard. The standard should have pulse outputs proportional to Wh/pulse (or VAh/pulse).

Pulses from the reference standard are accumulated over one demand interval, and then the total pulse count representing watt-hours or volt-ampere-hours is converted to an average demand value using the formulas in Demand Calculations.

Because of the high accuracy of the CENTRON Polyphase meter, the following is the recommended procedure for testing these meters.

DRAFT

Demand Test Method

1 Connect the meter under test and the reference standard in the same circuit with all voltage coils in parallel and current coils in series as per standard meter testing procedures.

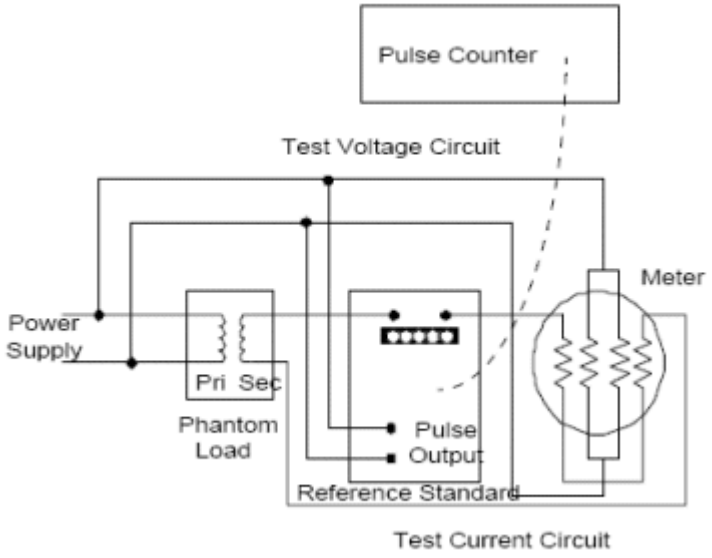

Figure 35: Test Connections

2 Apply rated voltage to the meter under test and the reference standard. Set the test current to the desired level (FL, LL, or PF test amps or any desired level within the meter rating). To ensure that the supply polarities are correct, check that the Load Emulation Annunciator is traversing in the forward direction. Switch off only the current to both the meter and the standard.

3 Reset and enable the pulse counting device.

4 Put the CENTRON Polyphase meter into Test Mode by pressing the Test switch. Once this has been done, push in the Demand Reset switch to zero the test registers and start a new demand interval.

5 Start the test by switching on the current to all meters and the reference simultaneously.

6 The End-of-Interval (EOI) flag will appear for five seconds in the display after the end of the demand interval. At this time, switch off the current to all meters simultaneously and stop the pulse count. Do *not* disconnect the voltage to the meter.

7 Record the pulse counter total and the values displayed on the CENTRON Polyphase meter.

8 Perform calculations A, B, C, and D (if applicable) in the demand calculations section and compare the results.

Meter Single Phase Test Constants (SPTC)					
Form		Series	A Phase Only	B Phase Only	C Phase Only
9 or 16	3Ø, 3W,	0.911	.866	.0866	1
9, 16, or 14	3Ø, 4W, wye	1	1	1	1

This test method is valid for kWh, kVAh, kvarh, kW, kVA, and kvar at any load or power factor.

Demand Calculations

With solid-state metering, conducting energy and demand tests may be considered redundant since they are both results of the same measurement.

Calculation A: Actual Active Energy (kWh)

Actual active energy is calculated using the following formula:

$kWh = P_T \times Kh \times N/1000$

where: Kh = watt-hours per pulse output value from the reference standard. (A watt and/or a VA standard must be used.)

P_T = Total pulses accumulated from the reference standard

N = Coil factor (See Testing With the infrared Test LED)

Pre-calculate the total pulses expected with the following formula to ensure that the pulse counter display does not overflow:

$P_T \times Kh = V \times I \times T/(Kh \times 60)$

where: V = Voltage applied to standard

I = Current applied to standard

T = Test Mode demand interval length in minutes

If Test Mode display is in watt-hours (Wh), divide by 1000 to get kWh.

Calculation B: Actual Active Demand (kW)

Actual active demand is calculated using the following formula:

$kW = kWh \times 60/T$

where: T = Test Mode demand interval length in minutes

Calculation C: Actual KVA Hours

$kVAh = P_T \times Kh \times N/ (1000*SPTC)$

DRAFT

where: N = Coil factor (See Testing With the Infrared Test LED)

SPTC=Single phase test constant (See the table in Demand Test Method)

Calculation D: Actual kVA Demand

kVA = kVAh x 60/T

where: T = Test Mode demand interval length in minutes

Field Testing

Field testing of the CENTRON Polyphase meter may be accomplished with conventional methods using either the infrared test pulses or the load emulation annunciator.

Required Hardware

The typical field test setup consists of a phantom load, a portable standard, and an infrared test pulse adapter with counter or snap switch assembly.

Test Method Using Infrared Pulse Adapter

The pulse adapter runs the test for a programmed number of pulses. The number of pulses is set on the test pulse adapter by the use of counter switches. The adapter will automatically start the test when the START COUNT button is pressed.

When the test begins, the test pulse adapter counts the pulses it receives from the meter until the programmed number of pulses have been received.

When this occurs, the pulse adapter automatically shuts off the portable standard. The standard then displays the number of equivalent disk revolutions which is then compared to the number of pulses for the test.

Test Method Using a Snap Switch Assembly

This method is similar to the above except starting and stopping of the standard is performed manually.

To conduct the test, the technician observes the position of the load emulation annunciator and simultaneously starts the standard through the snap switch. After observing a predetermined number of emulated disk rotations, the technician stops the standard with the snap switch. A comparison is then made between the predetermined number of emulated disk rotations and equivalent disk rotations indicated on the watthour standard.

DRAFT

Troubleshooting

Typically, meters are placed in a very unfriendly environment. While the CENTRON Polyphase meter is designed to perform within this harsh environment, things can go wrong with the meter or installation.

Fatal Errors

Fatal errors cause the display to lock on the error code because of the possibility that billing data may have been corrupted or that the meter may not be operating correctly. If multiple fatal errors occur, the one with the lowest number will be the error code that locks on the display.

The CENTRON Polyphase meter will check for fatal errors:

- when a meter reconfigure is performed.
- when power is initially energized and upon future power restoration.
- while performing key operations.

The different fatal errors should be handled as described in the table below. Fatal errors can only be cleared by performing a Factory Reset on the meter will wipe out all information in the meter, so be sure to try to retrieve any meaningful data from the meter prior to performing the Factory Reset. After this is performed, the meter must be reprogrammed.

Sometimes when a battery is plugged into a meter while the meter is powered down, it will result in a fatal error when the meter is powered up. This is due to an unstable voltage on the battery. In this case, the fatal error can be ignored and a Factory Reset performed on the meter. To prevent these fatal errors from occurring, always power up the meter before plugging a battery into it.

Fatal Errors			
Error Code	**Error**	**Possible Cause**	**Error Description**
FAtError1	MCU FLASH Error	The meter has detected a problem with the program memory.	If this error occurs, Factory Reset the meter, reprogram the meter and check for proper operation. If the error continues to exist, return the meter for repair.
FAtError2	RAM Error	The meter has detected a problem with the RAM.	If the meter detects this problem, return the meter for repair.
FAtError3	DATA FLASH Error	The meter has detected a problem with the data flash (non-volatile memory).	If this error occurs, Factory Reset the meter, reprogram the meter and check for proper operation. If the error continues to exist, return the meter for repair.

DRAFT

Fatal Errors			
Error Code	**Error**	**Possible Cause**	**Error Description**
FAtError4	Front End Process or Error	A problem has occurred with the metrology portion of the meter.	If the meter detects this problem, return the meter for repair.
FAtError5	Power Down Error	A problem has occurred while saving billing data at time of a power outage.	The billing data has been corrupted. Factory Reset the meter, reprogram the meter and check for proper operation, including several power cycles. If the error continues to exist, return the meter for repair.
FAtError6	File System Error	The meter has detected a problem with the file system	If the meter detects this problem, return the meter for repair.
FAtError7	Operating System Error	The meter has detected a problem with the operating system	If the meter detects this problem, return the meter for repair.

Non-Fatal Errors

Non-fatal errors can be programmed to scroll during the one second display off-time or lock on the meter display. If multiple non-fatal errors occur, the meter will display a combined error message. For example, if a Low Battery error and a Loss of Phase error exist, the error display will read `Err 12----`. In this case, if one of the errors had been programmed to lock, and the other error had been programmed to scroll, the display will lock on the combined error message.

Selecting a display mode by holding the magnet near the cover's magnet icon at the seven o'clock position allows that display mode sequence to scroll one time during a locked non-fatal error. At the end of the display sequence, the error message locks onto the display again.

DRAFT

Non-Fatal Errors			
Error Code	**Error**	**Possible Cause(s)**	**Error Description**
Err 1-----	Low Battery Error	Battery Voltage Low Battery Not Connected Properly	A low battery check is performed once a day and upon a set clock procedure. If a low battery is detected, the condition will remain until the battery is replaced. As long as the meter is not powered down with a dead or missing battery, the meter will continue to function as normal. When the battery is replaced while the meter is powered up, the meter will automatically detect the new battery and clear the error condition. If the meter is powered down with a dead or missing battery, then, when power is restored, the meter's clock will be off by the duration of the outage, and Load Profile and TOU will be halted. When the battery is replaced, a set clock procedure is needed to clear low battery error condition. This will also restart TOU and clear and restart Load Profile.
	To retain data for TOU and Load Profile, the battery must be replaced with the power applied to the meter.		
Err -2----	Loss of Phase Error	The voltage on one of the phases dropped below 45 volts.	The voltage on each phase is checked every five seconds. A phase must fail twice in a row to cause an error.A Demand Reset or a Clear STD or MFG Status Flags after the voltage returns will clear this error.
Err --3---	Time-of-Use (TOU) Error	• Current Season is not programmed. • Current Year is not programmed. • TOU halted due to power down with dead or missing battery.	This is tested at power-up, at midnight crossings, at season changes, upon reconfigures and upon set clocks. Depending on the cause of the error, it can be cleared with a corrective reconfigure or with a set clock with a good battery present.

DRAFT

Non-Fatal Errors			
Error Code	**Error**	**Possible Cause(s)**	**Error Description**
Err ---4--	Reverse Power Flow Error	The configured reverse power threshold has been reached	Reverse power is tested every second and an accumulator for it is maintained. If power is delivered during the second, then the accumulator is cleared. If power is received during the second, then the accumulator is incremented. If the accumulator reaches the configured reverse power threshold, then the error is triggered. A Demand Reset or a Clear STD or MFG Status Flags with power being delivered will clear this error.
Err ----5-	Clock/Load Profile Error	Load Profile halted due to power down with dead or missing battery.	This is tested upon power-up. A set clock with a good battery present will clear this error. Be sure to read the Load Profile data prior to setting the clock to clear the error. The dead battery will cause some invalid intervals at the end of the data. When the error is cleared, Load Profile will be restarted from the beginning to purge the bad data.
Err -----6	Full Scale Overflow Error	The calculated W delivered demand at an EOI exceeded the configured full scale value.	This is tested at a demand EOI.The maximum demand register continues to accumulate and W delivered is still correctly displayed. When a demand reset is performed, the correct maximum W delivered will be added to the cumulative register. A Demand Reset or a Clear STD or MFG Status Flags will clear this error. If a full scale overflow occurs, check the installation to ensure that the current capacity of the meter has not been exceeded. A full scale overflow error in no way affects the existing billing data.

DRAFT

Non-Fatal Errors			
Error Code	**Error**	**Possible Cause(s)**	**Error Description**
Err - 9---	SiteScan Error	SiteScan auto service detection could not determine the meter's service type.	This is tested after the power-up delay time has expired following a power-up, an exit Test mode and a reconfigure of SiteScan configuration data. While this condition is present, SiteScan Diagnostics and Voltage Quality are disabled. Once a SiteScan error occurs, SiteScan will continue to test for it every 5 seconds until the service is determined. When the service is determined, the error condition is cleared.

Other Problems

Demand Reset Cannot Be Initiated Through PC or Handheld

- Insufficient security.
- Communication cannot be established. See Programmer Cannot Communicate with Meter.

Incorrect or No Accumulation of kWh or kW

- *Demand Delay Selected*—kW will not accumulate immediately after a power outage if Cold Load Pickup (demand delay) has been selected. Accumulation will begin immediately after demand delay has expired. Verify meter program and reconfigure meter.
- *Component Failure*—Return the meter for repair.
- *Meter is not being tested properly*—See Recommended Testing Procedures.

Reset Mechanism Does Not Initiate Demand Reset

- *Reset Has Occurred Within Last Programmable Time Period, e.g., 60 Seconds*—Manual demand reset cannot occur within 60 seconds of the previous demand reset. Wait 60 seconds before trying again.
- *Reset Switch Disabled*—Reset switch may be disabled through software.
- *Register Board not Properly Installed in Upper Housing*—Verify that the Register board is fully engaged with the upper inner cover.

Blank Display

- *Power Not Applied to Meter*—Apply voltage to A phase (or phase-to-phase voltage with a polyphase power supply).
- *Voltage Too Low for Meter Startup*—the CENTRON Polyphase meter requires at least 45 volts to start up.
- *Voltage Connector Loose*—Voltage connector of the meter loose from the Register board; re-secure the connector.
- *Component Failure*—Return the meter for repair.
- *Board-to-Board Connector Not Seated*—Verify proper connection of board-to-board connector.

DRAFT

Time and Date Wrong (TOU Version)

- *Time/Date Wrong in PC or Handheld Device*—Verify and update time/date in programming device and download new time and date to meter. Refer to the appropriate software manual for more detailed directions.
- *Wrong Line Frequency*—Verify proper line frequency is selected in setup routine in programming software. Select proper frequency and reconfigure meter.
- *Battery Failure During Power Outage*—Verify battery voltage. Replace battery and download new time and date.
- *Daylight Savings Time Not Programmed Correctly*—Verify DST is selected in program. Reconfigure meter with correct program.
- *Component Failure*—Return meter for repair.

Optional Output Contact Closures Not Occurring

- *Meter Improperly Programmed*—Verify all required programmable values were defined.
- *Output Wiring Not Properly Connected*—Verify wiring and correct.
- *Meter Not Supplied with Output Electronics*—Retrofit proper output circuitry.
- *Option Board Component Failure*—Replace Option Board.
- *Meter Component Failure*—Return meter for repair.
- *Low (or No) Wetting Voltage*—Apply wetting voltage.
- *No Load*—Confirm load should be present.

Programmer Cannot Communicate with Meter

- *Optical Probe Cable Assembly Failure*—Check cable with known meter that communicates. Check meter against known cable that is functioning. Also check batteries in cable assembly (if applicable).
- *COM Port in Programmer Is Set Wrong*—Verify proper COM port number has been selected in the setup routine of the programming software. If the wrong COM port is selected communications will not occur.
- *Security Code in Meter*—If security codes have been downloaded to the meter, the programming device must have the proper code to make connection to the meter. Verify security codes in the setup routine of the programming software.
- *Cable Not Connected Properly*—Verify optical probe lines up properly over the optical connector. Re-install cover for proper alignment. Verify PC (or handheld) and cable are securely connected and attached to the correct COM port.
- *Incorrect Cable Selection*—Wrong cable selected in Options | Optical Probes section of PC-PRO+ Advanced.
- *Main Register Electronics Failure*—Return meter for repair.

Magnetic Switch Does Not Activate the Alternate or Toolbox Mode

- *Magnetic Field Is Too Weak*—Place magnet closer to switch or use stronger magnet.
- Magnet was not in place for four consecutive seconds.
- *Magnetic Switch Failure*—Return meter for repair.

Test Mode Switch Does Not Place Meter in Test Mode

- *No display items in Test Mode Display List*.
- *Switch deactivated by software*—Activate switch in software and reprogram meter.

DRAFT

- *Register Board not Properly Installed in Upper Housing*—Verify that the Register board is fully engaged with the inner cover.
- *Switch or Electronic Failure*—Return meter for repair.

Diagnostic 1 Condition Incorrectly Active

Verify that meter determined the correct service type.

Diagnostic 2, 3, or 4 Condition Incorrectly Active

Verify that thresholds are not set too tight.

Counters Are Too High

Verify that thresholds are not set too tight.

Maintenance

Preventive Maintenance

No scheduled or preventive maintenance (other than battery replacement for TOU/Load Profile versions) is necessary for the CENTRON Polyphase meter.

Line potential may exist on the battery terminals. Follow these precautions:

- **Never short-circuit batteries (such as by measuring current capability with an ammeter).**
- **Do not recharge batteries.**
- **Do not store or transport batteries in metal or other electrically conductive containers.**
- **Keep batteries separated. If stored in a container where they can contact each other, face them in the same direction to prevent short circuits.**
- **Do not operate batteries at temperatures above 85°C (185°F).**
- **Dispose of batteries where they will not be punctured, crushed, or incinerated.**
- **Discard the battery using proper hazardous waste procedures.**

Corrective Maintenance

Because of the high level of integrated packaging and surface-mount components, on-board component repairs are not recommended. The entire meter should be returned to Itron, Inc. Customer Service for repair.

DRAFT

Glossary of Terms

A

annunciator

A Liquid Crystal Display (LCD) label that is displayed to identify a particular quantity being displayed

B

baud

Unit of data transmission signalling speed, roughly analogous to bits per second (bps)

D

display duration

The programmed number of seconds that a quantity is displayed on the LCD before it is replaced with the next quantity in the display sequence

E

EEPROM

Electrically Erasable Programmable Read Only Memory. A memory chip that can only be erased by an electrical signal (retains data during a power outage)

electronic detent

An algorithm in firmware which restricts the device to metering energy flow only to the customer (unidirectional metering)

EPROM

Erasable Programmable Read Only Memory. Similar to EEPROM except it requires ultraviolet light to be erased

F

firmware

Computer programs stored in non-volatile memory chips (ROMs, PROMs, EPROMs, EEPROMs, etc.)

fixed decimal

A display format that always retains the same number of digits to the right of the decimal point

floating decimal

A display format that allows a maximum number of digits to the right of the decimal, but can display any number of digits to the right of the decimal equal to or less than that number specified

L

LCD

Liquid Crystal Display

LED

Light-Emitting Diode

M

magnetic reed switch

A mechanical switch consisting of a thin metal contact which is closed by an external magnetic field

N

nonvolatile memory

See EEPROM

R

RS-232

A communication media whereby information is transmitted through a serial bit stream

DRAFT

Index

About This Manual • 1
Alternate Display Mode • 45
annunciator • 99
Annunciators • 83
antenna
    RF • 25
Application of Power and Power-up • 37

base • 2
base metrology • 13
Battery Carryover • 52
baud • 99
Bit Resolution • 53
Blank Display • 96
board-to-board connector • 8, 17
button
    test mode • 8

Calculation A
    Actual Active Energy (kWh) • 90
Calculation B
    Actual Active Demand (kW) • 90
Calculation C
    Actual KVA Hours • 90
Calculation D
    Actual kVA Demand • 91
Calendar Schedule • 50
Capacity • 53
Changing Display Modes • 44
Channel Configuration • 54
Characteristic Data • 5
circuit board • 8
    metrology • 2, 28
Clearing Security Codes • 59
clock register • 17
Cold Load Pickup • 38
connector
    board-to-board • 8, 17
Controls and Indicators • 31
Corrective Maintenance • 98
counter
    power removal • 28
Counters Are Too High • 98
cover • 7
    inner • 8
    See also inner cover and outer cover • 8
Cross-Phase, Polarity, and Energy Flow Check • 73
Crystal Time synchronization • 7
Current Angle Tolerance • 73
Current Season Registers • 51
Current Waveform Distortion Check • 82
current/potential terminals • 8
cyclometer • 17

D

Daily Patterns • 51
Data Storage • 55
Day Types • 51
Demand Calculations • 90
Demand Data Display Items • 41
Demand Meter • 38
Demand Registers • 48
demand reset • 8
Demand Reset Button • 32
Demand Reset Cannot Be Initiated Through PC or Handheld • 96
Demand Test Method • 89
Demand Testing • 88
detent register • 18
Detented Register • 20
Diagnostic #1 Error Example • 74
Diagnostic #2 Error Example • 76
Diagnostic #3 Error Example • 78
Diagnostic #4 Error Example • 80
Diagnostic #6 Error Example • 82
Diagnostic 1 Condition Incorrectly Active • 98
Diagnostic 2, 3, or 4 Condition Incorrectly Active • 98
Diagnostic Displays • 47
Digits and Multipliers • 21
Dimensions • 6
Display • 25
display duration • 99
Display Functions • 4
Display Modes • 40

DRAFT

Display Timing • 21

EEPROM • 99
Electrical • 4
electronic detent • 99
Electronic Detent • 26
electronic load indicator • 25
energy consumption • 25
Energy Data Display Items • 41
Energy Registers • 47
Energy Testing • 85
EPROM • 99
ESD damage • 8
Event Log • 56

K

Factory Programming Options • 21
Factory Reset • 37
Fatal Errors • 92
FCC Regulations • 27
Field Testing • 91
firmware • 99
Firmware Upgrades • 60
fixed decimal • 99
floating decimal • 99
forward energy flow • 18, 26

General Description • 2
General Information • 1
grounding measures • 8

Hall Effect
    technology • 2

I/O module • 4
Implementing Security Codes • 59
Inactive Phase Current Check • 77
Incorrect or No Accumulation of kWh or kW • 96
Information Registers • 49
Informational Data Display Items • 42
Infrared Test LED • 32, 83
inner cover • 8
    removing • 8
input/output-ready • 4
Inspection • 7
Installation • 7
Installing D/T/L Register Firmware on the PC • 60
Installing the Meter into Service • 8
Instantaneous Data Display Items • 42
Instantaneous Registers • 49
Interrogation • 49
Interrogation and Programming • 49
Interval Data Message (IDM) • 24
Interval Lengths • 54
Interval Make-up • 39
inversion counter • 28
inversion tamper (ITPR) • 28
IR light pipe • 8
ITPR • 28

L

Kilowatt Hours • 18

Last Season Registers • 51
LCD • 99
LCD display • 8
LCD Display Function • 19
LCD holder • 8
LCD housing • 25
LCD module • 17, 18
LCD register • 17
LED • 99
line frequency • 7
Liquid Crystal Display (LCD) • 32
lithium battery
    shelf life • 7
Load Emulator • 34
Load Indication/Direction Annunciator • 84
Load Profile • 53
Load Profile Specifications • 53
Low End Threshold Current • 79

M

magnetic reed switch • 99
magnetic switch • 99
Magnetic Switch • 36, 44
Magnetic Switch Does Not Activate the Alternate or Toolbox Mode • 97
Maintenance • 98
metal oxide varistor • 2
meter
    resetting • 18
meter base • 2, 3, 7, 8, 23

DRAFT

Meter Base • 2
meter cover • 7
meter inversion • 28
meter removal • 28
meter storage • 7
Metrology • 13
metrology base • 2
metrology board • 8, 28
metrology circuit board • 2
Mode Timeout • 44
module
  LCD • 18
  R300 • 23
  register • 8
module holder • 3
MOV • 2

Net Metering • 27
Net Register • 20
Nominal Voltage Indication Annunciator • 84
Non-Detented Register • 19
Non-Fatal Errors • 93
nonvolatile memory • 99
non-volatile memory • 23
Normal Display Mode • 44
Normal Mode • 39

Operating Environment • 5
Operating Modes • 39
operating temperature range • 7, 25
Operation
  Base Metrology • 13
  CP1S Version • 17
  CP1SD/T/L Version • 31
  CP1SR Version • 23
optical connector • 7, 8
Optical Port • 36
Optional Output Contact Closures Not Occurring • 97
Other Problems • 96
outer cover
  removing • 8
Outputs • 4

PC-PRO+ Advanced Programming Software • 1
personality module • 2, 3, 4, 8
  C1S • 17
  C1SR • 23, 25
  handling • 7
Personality Modules • 3
Phase Angle Displacement Check • 79
Phase Voltage Deviation Check • 76
Phase-Voltage Indication Annunciators • 84
Physical Description • 2, 17, 25
Power Circle Quadrants • 36
Power Down Procedures • 38
Power Flow • 33
Power Outage • 54
power removal counter • 28
Preventive Maintenance • 98
Product Availability • 4
Programmer Cannot Communicate with Meter • 97
Programming • 50
Proprietary Rights Notice • ii
PRO-READ • 1
Pulse Constants • 54

R

R300 module • 23
R300 Series • 60
random silent time • 27
Rate Annunciators and Active Rate Indicators • 52
Rates • 50
ReadOne Pro handheld reader • 28
Recommendations • 87
Recommendations for Minimum Variability • 88
Recommended Energy Testing Procedures • 86
Recommended Test Setup for Minimizing Test Time • 88
Recording Duration • 56
register module • 8
Registers • 18, 25, 47
removal tamper (RTPR) • 28
removal tamper counter • 28
Required Hardware • 91
reset mechanism • 7
Reset Mechanism Does Not Initiate Demand Reset • 96
resetting meter • 18
Resetting Values • 18, 27
Retrofit Kit
  C1SR • 29
retrofitting • 8
Retrofitting the CP1SR Personality Module • 29

DRAFT

Retrofitting with Personality Modules • 8, 30
reverse current flow • 28
reverse energy flow • 18, 26
reverse power flow • 28
RF antenna • 25
RS-232 • 99
RTPR • 28

Sampling • 14
SCM Testing • 28
Scroll Lock • 44
Season Change • 52
Seasonal Schedules • 51
Security Codes • 58
Segment Check • 21
segment test • 8
Selecting a Site • 7
Self Read and Snapshot Registers • 49
silent time • 27
SiteScan Diagnostic #1 • 73
SiteScan Diagnostic #2 • 75
SiteScan Diagnostic #3 • 77
SiteScan Diagnostic #4 • 79
SiteScan Diagnostic #5 • 81
SiteScan Diagnostic #6 • 82
SiteScan Meter Self-Diagnostic Checks • 62
SiteScan On-Site Monitoring System • 61
SiteScan System and Installation Diagnostic Checks • 65
SiteScan Toolbox Mode • 62
Solution 1 • 87
Solution 2 • 87
Solution 3 • 88
Specifications • 4
Standard Consumption Message (SCM) • 24
storage
meter • 7
Storage • 7
Surge Protection • 14

tamper counter • 27
Tamper Detection • 28
tamper indication • 28
Technical Data • 5
Test Alternate Display Mode • 47
Test Description • 86
Test Display Mode • 46
Test Method Using a Snap Switch Assembly • 91
Test Method Using Infrared Pulse Adapter • 91
Test Mode • 39
test mode annunciator • 8
Test Mode Annunciator • 85
test mode button • 8
Test Mode Button • 37
Test Mode Lockout • 40
Test Mode Switch Does Not Place Meter in Test Mode • 97
Test Mode Timeout • 40
Testing the CENTRON CP1SR Tamper Counter • 28
Testing Using the Energy/Time Method • 86
Testing Using the Load Indication Annunciator • 86
Testing With the Infrared Test LED • 85
Testing, Troubleshooting and Maintenance • 22, 30
Testing, Troubleshooting, and Maintenance • 83
Time and Date Wrong (TOU Version) • 97
Time-of-Use (TOU) • 50
Toolbox Display Mode • 45
TOU Operation • 51
TOU Registers • 51
TOU Schedules • 50
TOU/Load Profile Meters • 38
TR • 25
transformer rated meter • 25
transformer ratio (TR) • 25
transmission cycle • 27
Transmission Scheme • 27
Troubleshooting • 92

U

Unpacking • 7

V

Visual Indicators • 83
Voltage and Current Measurement • 15

W

watt disk emulator • 25

Z

ZRO-C2 • 18
ZRO-C2 Resetter • 17, 25, 27

DRAFT