User's Manual

ITEM : CELLULAR REPETER
MODEL : MGR-319H

MAXUS Technologies, Inc.
2963 Sujin-Dong, Sujung-Gu,
Seong Nam- Si, Kyeong Gi –Do, Korea
Tel +82-31-754-6633 Fax +82-31-755-9286
www.maxustek.com

Contents

pages

1. Scope…… 4
2. Feature…… 4
3. Electrical Specification…… 5
4. General Description…… 6
   4.1 Structure…… 6
   4.2 Part Description…… 6
5. Installation…… 7
   5.1 Antenna Installation…… 7
   5.2 Installation of Repeater Body…… 9
   5.3 Power Supply & Operating Status Check…… 10
6. Trouble shooting…… 13
   6.1 Troubles & Solutions…… 13
   6.2 Performance Falloff & Repair…… 13

1.Scope

MGR-319 L and H are a PCS band cellular repeater designed for the smooth call by amplifying the weak cellular phone signals, which can be installed in a place difficult to make cellular phone call due to weak signals.

Note : It is recommended that you read carefully this manual before using this product.

2.Features

- Extending the base station coverage into the weak signal areas.
- Small size and light weight
- Easy to install. Just follow the instruction for the installation.
- Automatic Limit Control (ALC)
- Shutdown Control (SDC)
- 7dBm RF Power

3. Electrical Specification

ITEMS		SPECIFICATIONS		Remarks
		Up Link	Down Link	
Frequency Range	MGR-319L	1850~1885MHz	1930~1965MHz	A,B,D Band
	MGR-319H	1885~1910MHz	1965~1990MHz	E,F,C Band
Pass Bandwidth	MGR-319L	25MHz		
	MGR-319H	35MHz		
Output Power		7dBm ±2dBm	7dBm ±2dBm	
Gain		50dB ±2dB max.	50dB ±2dB max.	
ALC		7dBm ±2dBm		
VSWR		<1:1.5		
Gain Flatness		<4dB		
Noise Figure		<7dB		
IMD		>45dBc @2tone-IMD		
Spurious		>45dBc @885KHz		
RF Connector Type		SMA Female		
Supply Power		DC 9V /1.2A		
Dimension		130(W) x 200(H) x 25max(D) mm		
Mechanical Material		Aluminum		
Operating Temperature		-20℃ ~ +60℃		

**The specifications is subject to change without notice*

4. General Description

4.1 Structure

The repeater consists of the followings.

FRONT VIEW

TOP VIEW

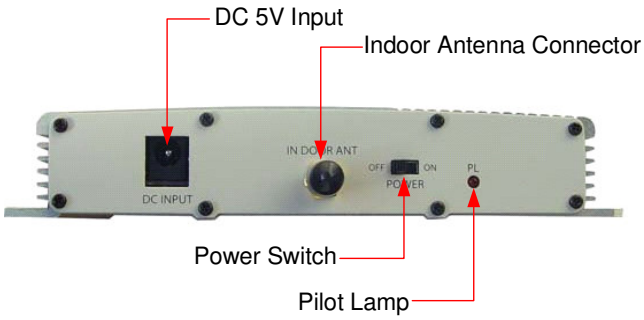

BOTTOM VIEW

10m Coaxial Cable

Outdoor Antenna

Indoor Antenna

Screws

5. Installation

5.1 Antenna Installation

This is one of the most important processes in repeater installation, which gives very important influence to the performance of this equipment.

5.1.1 The system includes two omni directional antennas, one is for indoor and the other is for outdoor. First, decide a place to install the outdoor antenna, and then attach the antenna bracket to the selected place. Before attaching the bracket, fix the antenna firmly to the bracket by using a connector.

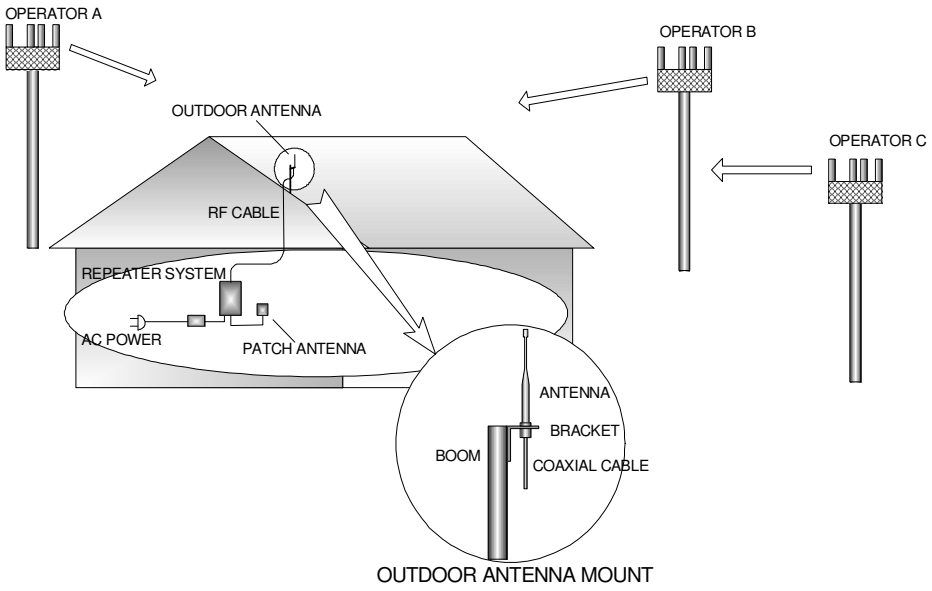

[Fig. 5-1 Antenna Installation]

5.1.2 Once the antenna bracket with a connector is fixed as shown in Fig. 5-1, bring the coaxial cable to the place to connect with the repeater body.

5.1.3 Install the indoor antenna. In addition to an omni directional antenna supplied as basic accessory, this repeater may include a patch antenna as an option. The basic antenna should be pre-connected to the antenna connector in the lower part of the repeater, while the patch antenna should be connected to the direction for the cellular phone users.

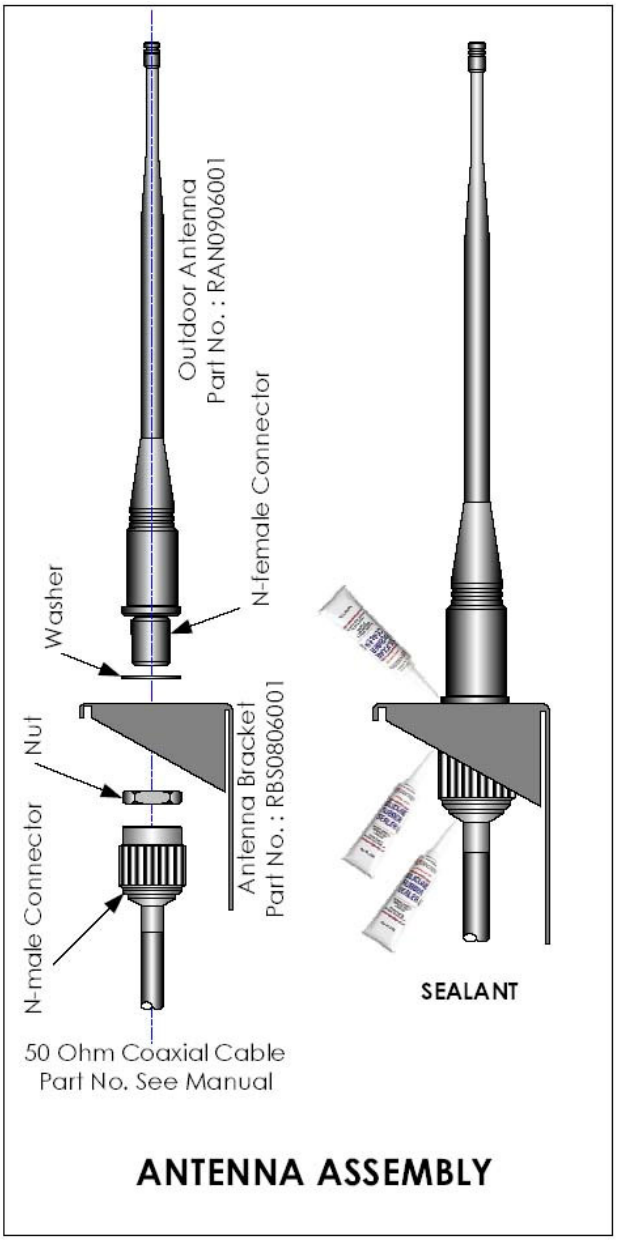
Outdoor Antenna
Part No. : RAN0906001
N-female Connector
Washer
Nut
Antenna Bracket
Part No. : RBS0806001
N-male Connector
50 Ohm Coaxial Cable
Part No. See Manual
SEALANT
ANTENNA ASSEMBLY

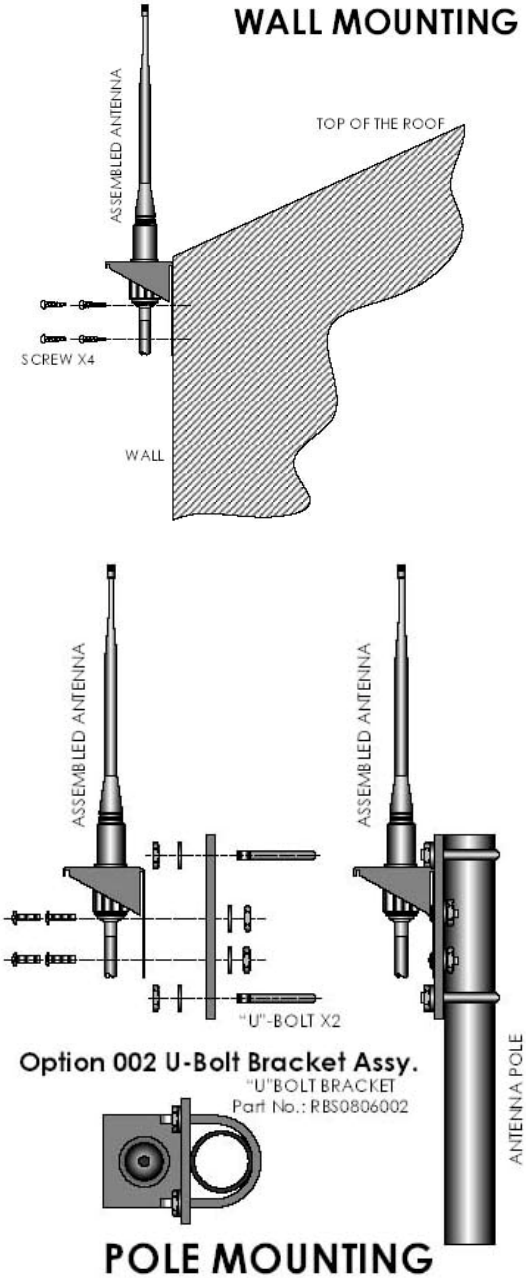
WALL MOUNTING
ASSEMBLED ANTENNA
TOP OF THE ROOF
SCREW X4
WALL
ASSEMBLED ANTENNA
ASSEMBLED ANTENNA
"U"-BOLT X2
Option 002 U-Bolt Bracket Assy.
"U"BOLT BRACKET
Part No.: RBS0806002
ANTENNA POLE
POLE MOUNTING

5.2 Installation of Repeater Body

5.2.1 Fix the repeater to the wall with screws through the 4 holes on the flaps of the repeater. It is better to fix with plastic expansion anchors, if the wall is concrete or dry wall.

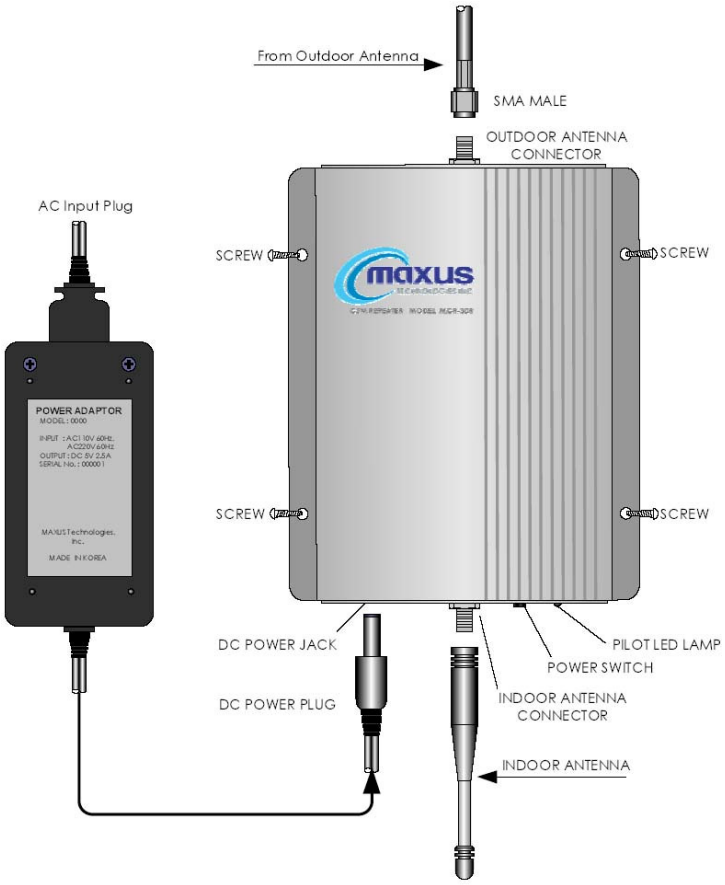

5.2.2 It is recommended that the repeater body should be installed by using shorter cable, but also should give enough distance from the outdoor antenna. Since the longer antenna cable gives more loss to the signal strength, less than 40m of the length is desirable (if 3D-FB). However, if the long cable is inevitable, you should use a low-loss cable.

5.2.3 Use an AC adapter to supply power for the repeater. As the repeater adapter for power supply is designed at 100V~270V free voltage, it is unnecessary to pay high attention to the voltage, however, it is safe to check it.

5.2.4 Connect the antenna cable and the power supplier to the repeater. Before connecting the power supplier, always make sure that the power switch on the lower part of the repeater is set to OFF position.

5.3 Power Supply & Operating Status Check

5.3.1 Before turning on the power of the repeater, it is suggested to check the input power level from the outdoor antenna. If it is lower than -70dBm, the repeater coverage will be reduced. The optimum coverage can be obtained between the input power level of -60dBm and -40dBm.

5.3.2 Status Check with Cellular Phone - Checking the operating status with cellular phone is one of the simplest methods. First, confirm the incoming signal levels in the building under the power-off condition of the repeater, then compare the levels after the power-on. It is desired to check this at the position as far as possible from the repeater. Also, it is suggested to check the incoming signals by using one more cellular phone models, from the various service providers within the frequency band. At this time, if it's favorable condition, the signal level meter of the cellular phone should indicate the higher level.

5.3.3 Check & Measurement With Measuring Instrument - As a method to perform more detailed measurement, this enables to determine how level of signals can be received actually indoor, by means of spectrum analyzer or field strength meter.

5.3.3 Check & Measurement with Measuring Instrument - As a method to perform more detailed measurement, you can use spectrum analyzer or field strength meter, by which the signal level received into the building can be checked.

5.3.4 When more expanded indoor coverage is desired - As options of this equipment, outdoor Yagi antenna and indoor Patch antenna may be provided. They can expand the coverage through the superior gain, compared with conventional antennas. If using the outdoor Yagi antenna, since it enables to exchange signals more dynamically from/to the base station, it is available to transmit full 10dBm, the maximum output of the repeater. And, if using the indoor Patch antenna, as it enables to dispatch signals to the cellular phone more effectively than the usual omni antenna, it is possible to send call signals far away. However, since they have unique directivity, the proper directing of the signal is required.

5.3.5 If the input power from the outdoor antenna is -54dBm, maximum output power (7dBm) can be obtained. If the input power increases by 30dB, up to -24dBm, the output power can be maintained to 7dBm by the ALC function, but, further more strong input may cause saturation in the repeater and bad characteristics of IMD. These problems can be prevented by the automatic output power shutdown function of this repeater, and simultaneously, the red LED lamp is on. In this case, the power switch of the repeater should be turned OFF, and ON for the operation again. The green lamp color shows the normal operation of the repeater.

After repeater's shutting down, if the incoming power becomes stable and is restored below the designated level, the system operation automatically starts working in about 40~50 seconds.

In the case of the outdoor antenna, by using an instrument or the LED level meter on the repeater, you can find the position of best intensity, and, toward that direction, the antenna should be set. Provided that the situation corresponds to the warning 1) below, it must point to the direction of the provider whose base station is located farthest. The following shows the transition of the indoor coverage according to antenna types used indoor.

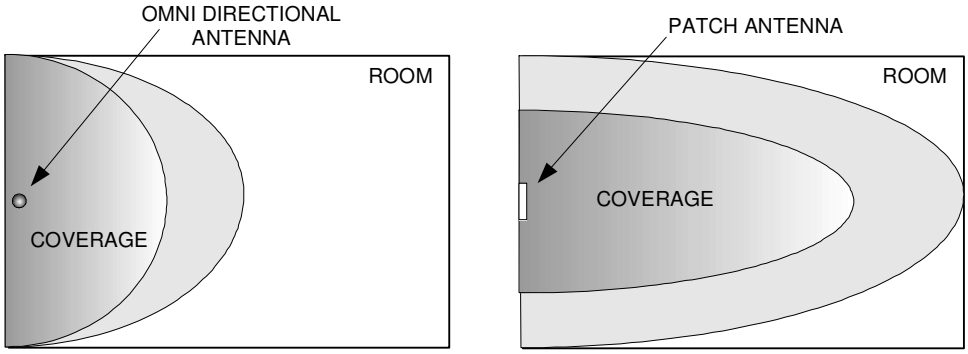

Using omni directional antenna Using directional antenna

[Fig. 5-5 Coverage Transition according to types of indoor antennas]

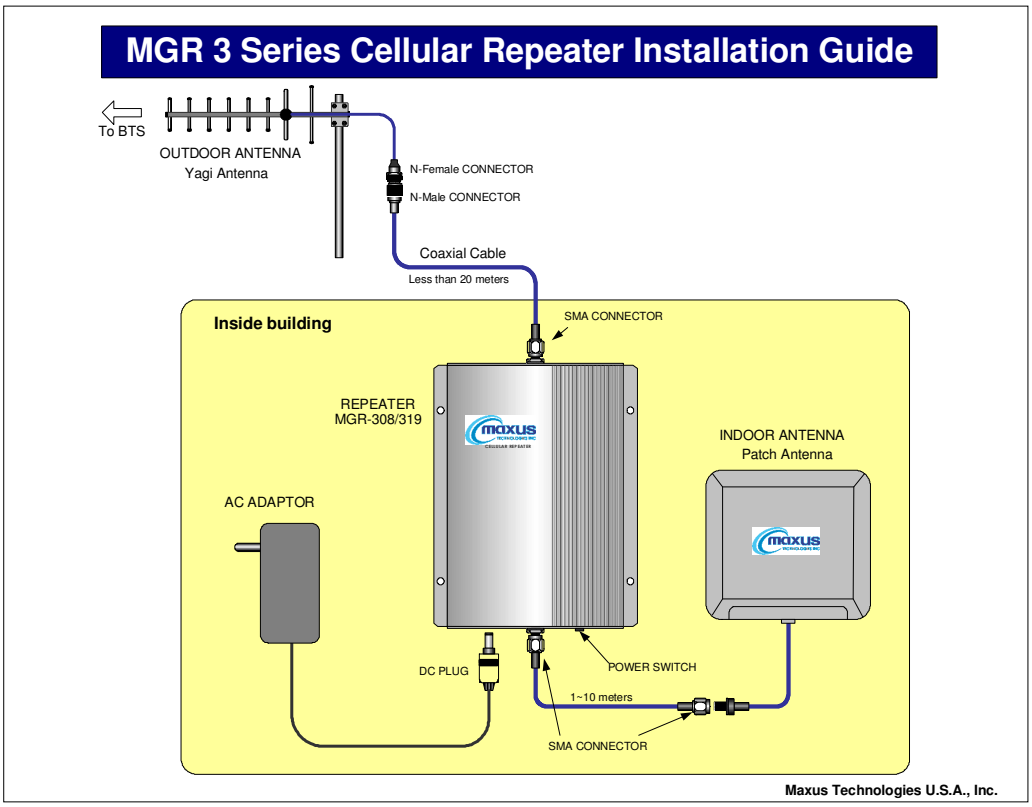

Copyright ? 2004 Maxus Technologies U.S.A., Inc.

[Warnings]

This cellular repeater, as a broadband amplifier, is designed to respond simultaneously to the broadband frequencies. When installing the repeater, you should be careful in case of the following situations.

1) If more than two service providers exist within the frequency band of the repeater to be installed, and, if one base station is located within 30 feet, while the other stations are at several kilometers away, the signals from the nearby station are much more dominant. So, ALC operates automatically, and in such process, the attenuator operates at up to 14dB. For that reason, as the signals from near station decrease the gain of the repeater, it is unavailable to get 50dB maximum gain. Thus, in such case, the directional antenna (Yagi antenna, etc.) should be installed to the opposite direction from the nearby station, in order to minimize the signal exchanges with the station nearby.

2) If the outdoor antenna is close to the indoor one;

Since this equipment performs high-gain amplification, if two antennas are adjacent, the RF signal may be feed backed and abnormal self-oscillation may occur, which may cause serious damage to the cellular phone, at the worst, even to the base station. Therefore, you should be very careful to avoid this. The most reliable method is to measure and check the condition with spectrum analyzer.

3) Never install the antenna in the places where the risk of a fire exists highly, where the equipment may come in contact with water due to leakage, or where the mobile blocker is installed.

6. Trouble Shooting

6.1 Troubles & Solutions

6.1.1 The PWR LED in the front of the equipment doesn't light on, although the equipment is completely installed and switched on.

1) Check whether the power is normally supplied in the AC power source outlet.
2) Check whether the DC jack is correctly connected.
3) Check whether DC 5V is out from the AC adapter. If an error is found, replace it.

6.1.2 The signal level is not displayed on the cellular phone, although the PWR LED light is normally on.

1) First, check whether the PWR LED light in the front of the equipment is on; if not, see Section 6.1.1.
2) The PWR LED light is on, but the LED level meter doesn't light on at all.

- Check whether the outdoor antenna is correctly connected.
- Check whether the antenna cable (coaxial cable) or the connector is correctly connected.
- When the signals are very weak from the base station, and so, it is unavailable to receive the signals even outdoor (where the outdoor antenna is installed), check it with the cellular phone or measuring instrument. If the signals are poor, adjust the position of the antenna. Nevertheless, if they are still poor, use the Yagi antenna to increase the gain of the antenna.
- Check whether the frequency band showing in the electrical features of the repeater meets the frequency specification supported by the service provider in the real environment. As GSM900 or Cellular 800MHz repeater uses the full band, an additional check is unnecessary. However, if it's GSM1800 or PCS1900, their frequencies are divided into two or three types, so you need to check it.

6.2 Performance Falloff & Repair

As the advanced techniques are required to repair this equipment, a discretionary disassembly or modification may not only give failure to the other's communication, but also cause falloff of the durability or performance of this equipment. We do not suggest these actions and do not take responsibility for the results. Thus, always contact the qualified service center to get an appropriate repair service.

MAXUS Technologies, Inc.

Head office:

2963 Sujin-Dong, Sujung-Gu, Seongnam-Si
Kyeong gi-Do, Seoul Korea
Tel +82-31-754-6633
Fax+82-31-755-9286

MAXUS Technologies USA, Inc.

3820 Del Amo Blvd., Suite 216,
Torrance, CA 90503, U.S.A
Tel +1-310-793-9300
Fax+1-310-793-9301
www.maxustek.com
sales@maxustek.com