NLS-HR15

Hand-held Barcode Scanner

User Guide

Disclaimer

© 2018 Fujian Newland Auto-ID Tech. Co., Ltd. All rights reserved.

Please read through the manual carefully before using the product and operate it according to the manual. It is advised that you should keep this manual for future reference.

Do not disassemble the device or remove the seal label from the device, doing so will void the product warranty provided by Fujian Newland Auto-ID Tech. Co., Ltd.

All pictures in this manual are for reference only and actual product may differ. Regarding to the product modification and update, Fujian Newland Auto-ID Tech. Co., Ltd. reserves the right to make changes to any software or hardware to improve reliability, function, or design at any time without notice. The information contained herein is subject to change without prior notice.

The products depicted in this manual may include software copyrighted by Fujian Newland Auto-ID Tech. Co., Ltd or third party. The user, corporation or individual, shall not duplicate, in whole or in part, distribute, modify, decompile, disassemble, decode, reverse engineer, rent, transfer or sublicense such software without prior written consent from the copyright holders.

This manual is copyrighted. No part of this publication may be reproduced, distributed or used in any form without written permission from Newland.

Fujian Newland Auto-ID Tech. Co., Ltd. reserves the right to make final interpretation of the statement above.

Fujian Newland Auto-ID Tech. Co., Ltd.
Newland Science & Technology Park, No.1 Rujiang West Rd., Mawei, Fuzhou, P.R.China
http://www.newlandaidc.com

Revision History

Version	Description	Date
V1.0.0	Initial release.	December 4, 2016

Table of Contents

Revision History ..... **- 3 -**

Preface **1**

Introduction 1

Chapter Description 1

Explanation of Icons 2

Chapter 1 Getting Started **3**

Introduction 3

Features of the HR52 3

Unpacking 3

HR52 Scanner 4

Dimensions of the Scanner (unit: mm) 5

CD52 Cradle 6

Dimensions of the Cradle (unit: mm) 7

Mounting the Cradle 8

Horizontal Mount 8

Vertical Mount 8

Wall Mount 10

Connecting the Cradle to a Host 11

Using USB Cable 11

Using RS-232 Cable 12

Charging the Scanner Battery 12

Pairing the Scanner to a Cradle 13

Searching Paired Scanner(s) 13

Wireless Communications 13

Power On, Power Off, Reboot 14

Maintenance 14

Scanning Instructions 15

Chapter 2 EasySet **16**

Chapter 3 System Settings **17**

Introduction 17

Barcode Programming 17

Command Programming 17
EasySet Programming 17
Programming Barcode/ Programming Command/Function 18
Use of Programming Command 19
Command Syntax 19
Query Commands 19
Responses 20
Examples 20
Use of Programming Barcodes 21
Illumination 22
Aiming 23
Good Read LED 23
Good Read LED Duration 24
Power On Beep 25
Good Read Beep 25
Good Read Beep Duration 26
Good Read Beep Frequency 27
Good Read Beep Volume 28
Good Read Vibration 28
Good Read Vibration Duration 29
Scan Mode 30
Decode Session Timeout 31
Image Stabilization Timeout (Sense Mode) 32
Reread Timeout 33
Image Decoding Timeout 34
Sensitivity (Sense Mode) 35
Scanning Preference 36
Read Barcode On/Off 36
Make a Beeping Sound 36
Smart Stand Mode 37
Decode Area 37
Image Flipping 40
Bad Read Message 41
Set Bad Read Message 41
Power Off/Battery Off 42
Default Settings 42

Factory Defaults 42
Custom Defaults 43
Query Scanner Information 44
Query Product Name 44
Query Firmware Version 44
Query Decoder Version 44
Query Data Formatter Version 45
Query Hardware Version 45
Query Serial Number 45
Query Manufacturing Date 45
Query OEM Serial Number 46
Query Cradle Information 46
Query Model Number 46
Query Firmware Version 46
Query Hardware Information 47
Query Serial Number 47
Query OEM Serial Number (ESN) 47
Query Manufacturing Date 47
Query Remaining Battery of Scanner 48
Chapter 4 Wireless Communications 49
Operating Modes 49
Batch Mode 49
Batch Mode Options 49
Prevent Same Barcode Storage 50
Batch Mode Transmit Delay 51
End of Transmission Message for Batch Mode 52
Transmit Stored Data 53
Auto Clear Stored Data after Transmission 53
Query/Clear Stored Data in Flash 53
Retransmission 54
Transmission Timeout 54
Retransmission Count 55
Scanner(s) to Cradle Support 56
Wireless Communication Modes 56
Clear Pairing Info on Scanner/Cradle 56

Set Date and Time 57
Query Current Date and Time 57
Time Stamp 57
Set Time Stamp Format 58
Chapter 5 RS-232 Interface 59
Introduction 59
Baud Rate 59
Parity Check 60
Data Bit 61
Stop Bit 61
Hardware Auto Flow Control 62
Chapter 6 USB Interface 63
Introduction 63
USB HID Keyboard 64
USB Country Keyboard Types 65
Emulate ALT+Keypad 69
Code Page 70
Unicode Encoding 72
Emulate Keypad with Leading Zero 72
Function Key Mapping 73
ASCII Function Key Mapping Table 74
ASCII Function Key Mapping Table (Continued) 75
Inter-Keystroke Delay 76
Convert Case 77
Emulate Numeric Keypad 78
Polling Rate 80
USB CDC 82
HID POS (POS HID Barcode Scanner) 83
Introduction 83
Access the Cradle with Your Program 83
Acquire Scanned Data 84
Send Command to the Cradle 84
IBM SurePOS (Tabletop) 85
IBM SurePOS (Handheld) 85
VID/PID 85

Chapter 7 Symbologies **86**
Introduction 86
Global Settings 86
Enable/Disable All Symbologies 86
Enable/Disable 1D Symbologies 86
Enable/Disable 2D Symbologies 87
Enable/Disable Postal Symbologies 87
1D Twin Code 88
Surround GS1 Application Identifiers (AI's) with Parentheses 89
Code 128 90
Restore Factory Defaults 90
Enable/Disable Code 128 90
Set Length Range for Code 128 91
EAN-8 92
Restore Factory Defaults 92
Enable/Disable EAN-8 92
Transmit Check Character 92
2-Digit Add-On Code 93
5-Digit Add-On Code 94
Convert EAN-8 to EAN-13 95
EAN-13 96
Restore Factory Defaults 96
Enable/Disable EAN-13 96
Transmit Check Character 97
2-Digit Add-On Code 97
5-Digit Add-On Code 98
Add-On Code Required 98
EAN-13 Beginning with 290 Add-On Code Required 99
EAN-13 Beginning with 378/379 Add-On Code Required 99
EAN-13 Beginning with 414/419 Add-On Code Required 100
EAN-13 Beginning with 434/439 Add-On Code Required 100
EAN-13 Beginning with 977 Add-On Code Required 101
EAN-13 Beginning with 978 Add-On Code Required 101
EAN-13 Beginning with 979 Add-On Code Required 102
UPC-E 103
Restore Factory Defaults 103

Enable/Disable UPC-E 103
Transmit Check Character 103
2-Digit Add-On Code 104
5-Digit Add-On Code 105
Transmit Preamble Character 106
Convert UPC-E to UPC-A 106
UPC-A 107
Restore Factory Defaults 107
Enable/Disable UPC-A 107
Transmit Check Character 107
2-Digit Add-On Code 108
5-Digit Add-On Code 109
Transmit Preamble Character 110
Coupon 111
UPC-A/EAN-13 with Extended Coupon Code 111
Coupon GS1 Databar Output 112
Interleaved 2 of 5 113
Restore Factory Defaults 113
Enable/Disable Interleaved 2 of 5 113
Set Length Range for Interleaved 2 of 5 114
Check Character Verification 115
Febraban 116
Disable/Enable Febraban 116
Transmit Delay per Character 116
Transmit Delay per 12 Characters 119
ITF-14 121
Restore Factory Defaults 121
Enable/Disable ITF-14 121
ITF-6 122
Restore Factory Defaults 122
Enable/Disable ITF-6 122
Matrix 2 of 5 123
Restore Factory Defaults 123
Enable/Disable Matrix 2 of 5 123
Set Length Range for Matrix 2 of 5 124
Check Character Verification 125

Code 39 126
Restore Factory Defaults 126
Enable/Disable Code 39 126
Set Length Range for Code 39 127
Check Character Verification 128
Transmit Start/Stop Character 129
Enable/Disable Code 39 Full ASCII 129
Enable/Disable Code 32 (Italian Pharma Code) 130
Code 32 Prefix 130
Transmit Code 32 Start/Stop Character 131
Transmit Code 32 Check Character 131
Codabar 132
Restore Factory Defaults 132
Enable/Disable Codabar 132
Set Length Range for Codabar 133
Check Character Verification 134
Start/Stop Character 135
Code 93 136
Restore Factory Defaults 136
Enable/Disable Code 93 136
Set Length Range for Code 93 137
Check Character Verification 138
China Post 25 139
Restore Factory Defaults 139
Enable/Disable China Post 25 139
Set Length Range for China Post 25 140
Check Character Verification 141
GS1-128 (UCC/EAN-128) 142
Restore Factory Defaults 142
Enable/Disable GS1-128 142
Set Length Range for GS1-128 143
GS1 Databar (RSS) 144
Restore Factory Defaults 144
Enable/Disable GS1 Databar 144
Transmit Application Identifier “01” 144
GS1 Composite (EAN·UCC Composite) 145

Restore Factory Defaults 145
Enable/Disable GS1 Composite 145
Enable/Disable UPC/EAN Composite 145
Code 11 146
Restore Factory Defaults 146
Enable/Disable Code 11 146
Set Length Range for Code 11 147
Check Character Verification 148
Transmit Check Character 149
ISBN 150
Restore Factory Defaults 150
Enable/Disable ISBN 150
Set ISBN Format 151
ISSN 152
Restore Factory Defaults 152
Enable/Disable ISSN 152
Industrial 25 153
Restore Factory Defaults 153
Enable/Disable Industrial 25 153
Set Length Range for Industrial 25 154
Check Character Verification 155
Standard 25 156
Restore Factory Defaults 156
Enable/Disable Standard 25 156
Set Length Range for Standard 25 157
Check Character Verification 158
Plessey 159
Restore Factory Defaults 159
Enable/Disable Plessey 159
Set Length Range for Plessey 160
Check Character Verification 161
MSI-Plessey 162
Restore Factory Defaults 162
Enable/Disable MSI-Plessey 162
Set Length Range for MSI-Plessey 163
Check Character Verification 164

Transmit Check Character 165
AIM 128 166
Restore Factory Defaults 166
Enable/Disable AIM 128 166
Set Length Range for AIM 128 167
ISBT 128 168
Restore Factory Defaults 168
Enable/Disable ISBT 128 168
Code 49 169
Restore Factory Defaults 169
Enable/Disable Code 49 169
Set Length Range for Code 49 170
Code 16K 171
Restore Factory Defaults 171
Enable/Disable Code 16K 171
Set Length Range for Code 16K 172
PDF417 173
Restore Factory Defaults 173
Enable/Disable PDF417 173
Set Length Range for PDF417 174
PDF417 Twin Code 175
PDF417 Inverse 176
Character Encoding 176
PDF417 ECI Output 177
Micro PDF417 178
Restore Factory Defaults 178
Enable/Disable Micro PDF417 178
Set Length Range for Micro PDF417 179
QR Code 180
Restore Factory Defaults 180
Enable/Disable QR Code 180
Set Length Range for QR Code 181
QR Twin Code 182
QR Inverse 183
Character Encoding 183
QR ECI Output 184

Micro QR Code 185
Restore Factory Defaults 185
Enable/Disable Micro QR 185
Set Length Range for Micro QR 186
Aztec 187
Restore Factory Defaults 187
Enable/Disable Aztec Code 187
Set Length Range for Aztec Code 188
Read Multi-barcodes on an Image 189
Set the Number of Barcodes 190
Character Encoding 191
Aztec ECI Output 191
Data Matrix 192
Restore Factory Defaults 192
Enable/Disable Data Matrix 192
Set Length Range for Data Matrix 193
Data Matrix Twin Code 194
Rectangular Barcode 195
Data Matrix Inverse 195
Character Encoding 196
Data Matrix ECI Output 196
Maxicode 197
Restore Factory Defaults 197
Enable/Disable Maxicode 197
Set Length Range for Maxicode 198
Chinese Sensible Code 199
Restore Factory Defaults 199
Enable/Disable Chinese Sensible Code 199
Set Length Range for Chinese Sensible Code 200
Chinese Sensible Twin Code 201
Chinese Sensible Code Inverse 202
GM Code 203
Restore Factory Defaults 203
Enable/Disable GM 203
Set Length Range for GM 204
Code One 205

Restore Factory Defaults 205
Enable/Disable Code One 205
Set Length Range for Code One 206
USPS Postnet 207
Restore Factory Defaults 207
Enable/Disable USPS Postnet 207
Transmit Check Character 207
USPS Intelligent Mail 208
Restore Factory Defaults 208
Enable/Disable USPS Intelligent Mail 208
Royal Mail 209
Restore Factory Defaults 209
Enable/Disable Royal Mail 209
USPS Planet 210
Restore Factory Defaults 210
Enable/Disable USPS Planet 210
Transmit Check Character 210
KIX Post 211
Restore Factory Defaults 211
Enable/Disable KIX Post 211
Australian Postal 212
Restore Factory Defaults 212
Enable/Disable Australian Postal 212
Specific OCR-B 213
Restore Factory Defaults 213
Enable/Disable Specific OCR-B 213
Passport OCR 214
Restore Factory Defaults 214
Enable/Disable Passport OCR 214
Chapter 8 Data Formatter 215
Introduction 215
Add a Data Format 215
Programming with Barcodes 215
Programming with Serial Commands 218
Enable/Disable Data Formatter 219

Non-Match Error Beep 220
Data Format Selection 221
Change Data Format for a Single Scan 222
Clear Data Format 223
Query Data Formats 223
Formatter Command Type 6 224
Send Commands 224
Move Commands 228
Search Commands 230
Miscellaneous Commands 233
Chapter 9 Prefix & Suffix 239
Introduction 239
Global Settings 240
Enable/Disable All Prefixes/Suffixes 240
Prefix Sequence 240
Custom Prefix 241
Enable/Disable Custom Prefix 241
Set Custom Prefix 241
AIM ID Prefix 242
Code ID Prefix 243
Restore All Default Code IDs 243
Modify Code ID 243
Custom Suffix 252
Enable/Disable Custom Suffix 252
Set Custom Suffix 252
Data Packing 253
Introduction 253
Data Packing Options 253
Terminating Character Suffix 255
Enable/Disable Terminating Character Suffix 255
Set Terminating Character Suffix 255
Chapter 10 Batch Programming 257
Introduction 257
Create a Batch Command 258
Create a Batch Barcode 258

Use Batch Barcode 259

Appendix 260

Digit Barcodes 260
Save/Cancel Barcodes 263
Factory Defaults Table 264
AIM ID Table 273
Code ID Table 275
Symbology ID Number 277
ASCII Table 279
Unicode Key Maps 283

Preface

Introduction

This manual provides detailed instructions for setting up and using the NLS-HR52 wireless 2D barcode scanner (hereinafter referred to as **"the NLS-HR15"** or **"the scanner"**) and NLS-HR15 cradle (hereinafter referred to as **"the CD15"** or **"the cradle"**).

Chapter Description

Chapter 1 Getting Started	*:* Gives a general description of HR52 scanner and CD15 cradle.
Chapter 2 EasySet	*:* Introduces a useful tool you can use to set up NLS-HR15 scanner and develop new applications.
Chapter 3 System Settings	*:* Introduces three configuration methods and describes how to configure general parameters of NLS-HR15 scanner.
Chapter 4 Wireless Communications	*:* Describes how to configure the parameters necessary for wireless communication between the scanner, cradle and host device.
Chapter 5 RS-232 Interface	*:* Describes how to configure RS-232 communication parameters.
Chapter 6 USB Interface	*:* Describes how to configure USB communication parameters.
Chapter 7 Symbologies	*:* Lists all compatible symbologies and describes how to configure the relevant parameters.
Chapter 8 Data Formatter	*:* Explains how to customize scanned data with the data formatter.
Chapter 9 Prefix & Suffix	*:* Describes how to use prefix and suffix to customize scanned data.
Chapter 10 Batch Programming	*:* Explains how to integrate a complex programming task into a single barcode.
Appendix	*:* Provides factory defaults table and a bunch of frequently used programming barcodes.

Explanation of Icons

This icon indicates something relevant to this manual.

This icon indicates this information requires extra attention from the reader.

This icon indicates handy tips that can help you use or configure the scanner with ease.

This icon indicates practical examples that can help you to acquaint yourself with operations.

Chapter 1 Getting Started

Introduction

The HR52 wireless 2D barcode scanner reads a 1D or 2D barcode by capturing its image. Adopting the advanced UIMG® technology independently developed by Newland Auto-ID Tech, it provides five scan modes, including Level mode, Sense mode, Continuous mode, Pulse mode and Batch mode, tailored to different scanning needs.

An illustrated introduction to the HR52 is included in this chapter. If you have an HR52 scanner at hand, make good use of it to develop a better understanding of this manual. This chapter is written for normal users, maintenance staff and software developers.

Features of the HR52

- More reliable, more versatile, more efficient scanning solution
- Bluetooth 5.0 radio (Frequency: 2402-2480MHz, RF Power: 5.88dBm)
- User-friendly illumination & aiming
- Ultra-rugged construction
- Flexible mounting of cradle

Unpacking

Open the package and take out HR52 scanner and its accessories. Check to make sure everything on the packing list is present and intact. If any contents are damaged or missing, please keep the original package and contact your dealer immediately for after-sales service.

HR52 Scanner

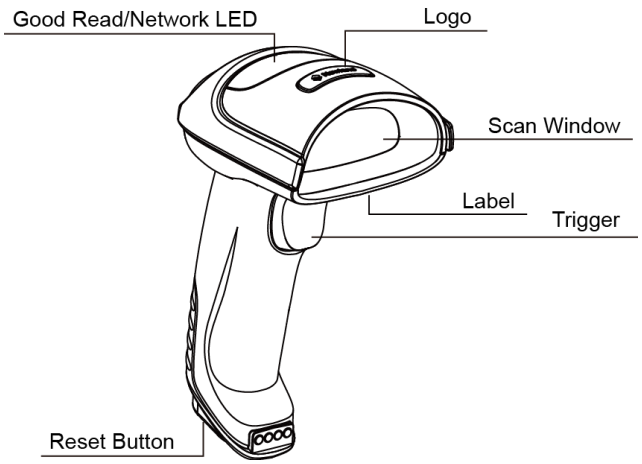

Good Read/Network LED:

Red LED flashes - Low battery alert.

Red LED on - Scanner not paired to cradle.

Blue LED flashes slowly - Paired but no connection established.

Blue LED on - Connection established.

Blue LED flashes quickly - Batch transmission in progress.

Green LED flashes once - Good read.

Dimensions of the Scanner (unit: mm)

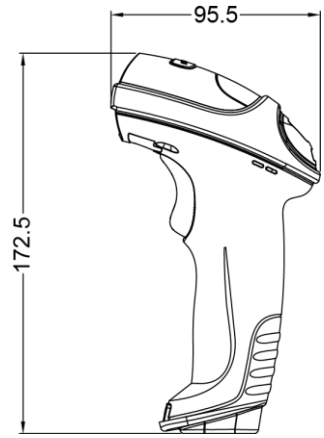

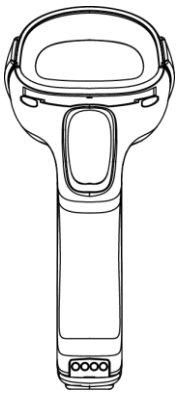

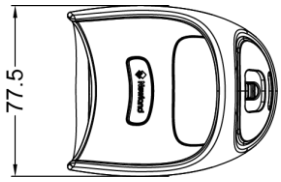

CD52 Cradle

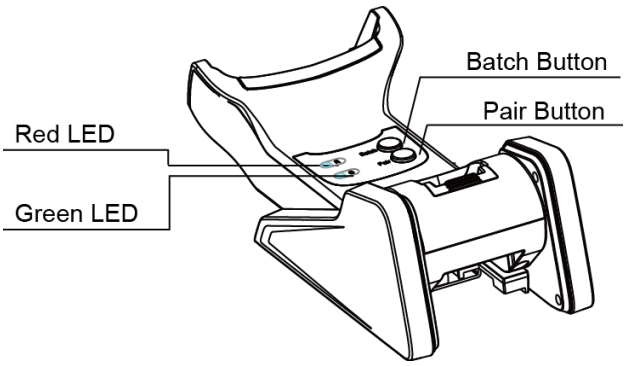

Red/Green LEDs:

Red LED on - No scanner placed on cradle.

Red LED flashes - Charging in progress, low battery level.

Green LED flashes - Charging in progress, medium battery level.

Green LED on - Fully charged.

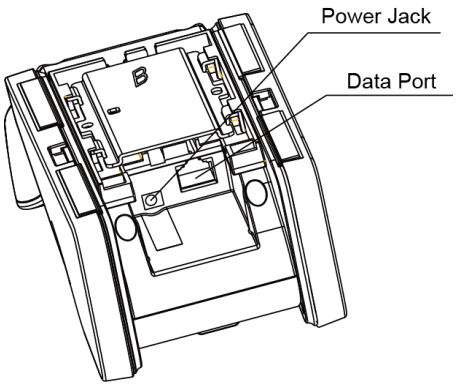

Data Port Pinouts:

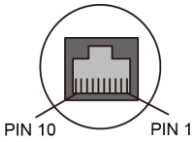

PIN	Signal	Type	Function
1	NC	-	No connection
2	NC	-	No connection
3	VCC	P	Power+ (+5V)
4	TXD	O	RS-232 output
5	RXD	I	RS-232 input
6	CTS	I	Flow control signal
7	RTS	O	
8	GND	P	Ground
9	D-	I/O	USB signal
10	D+	I/O	

Dimensions of the Cradle (unit: mm)

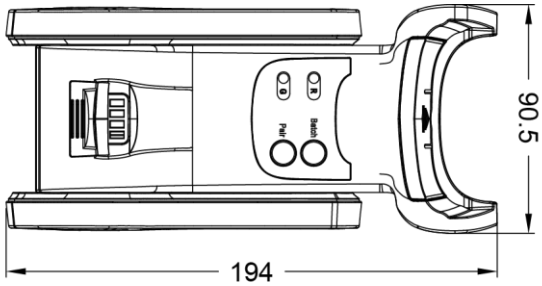

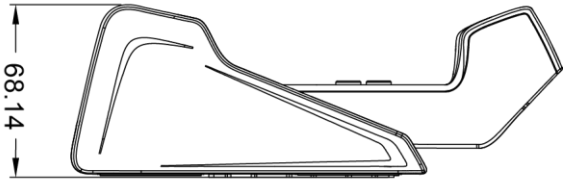

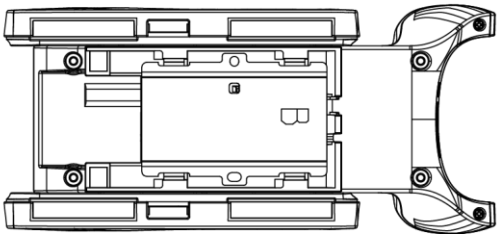

Mounting the Cradle

The CD52 cradle can be set up in a horizontal or vertical position. Choose a mounting position that fits your need.

Horizontal Mount

The cradle is originally assembled in the horizontal position, as shown below.

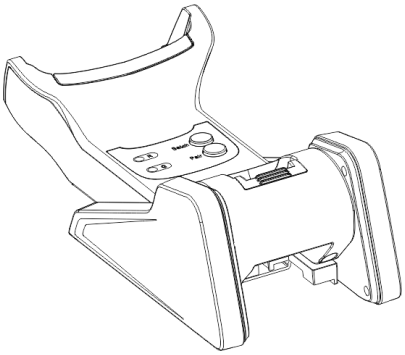

Vertical Mount

1. Remove the clips from the horizontal cradle and then attach the clips for vertical position to the corresponding spots on the cradle.

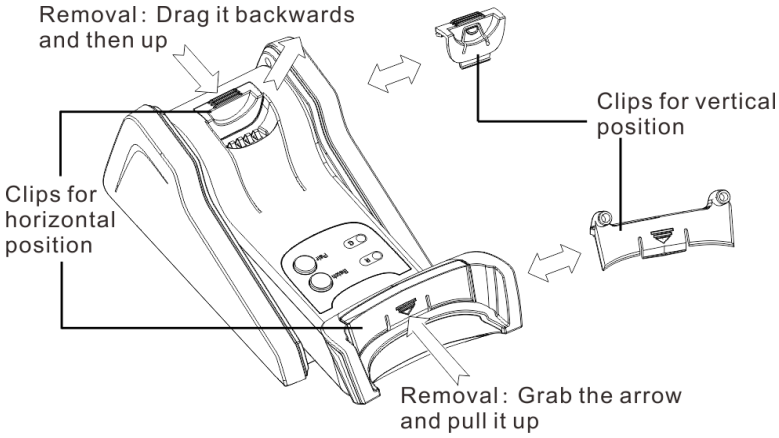

2. Grab and pull the right board horizontally away from the cradle. Then remove the main piece.

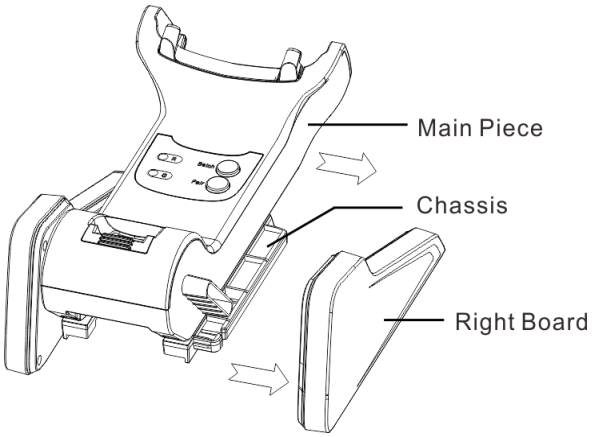

3. Insert the protruding part on the left side of the main piece into the groove on the left board, so that the main piece is vertical. Attach the right board to the main piece.

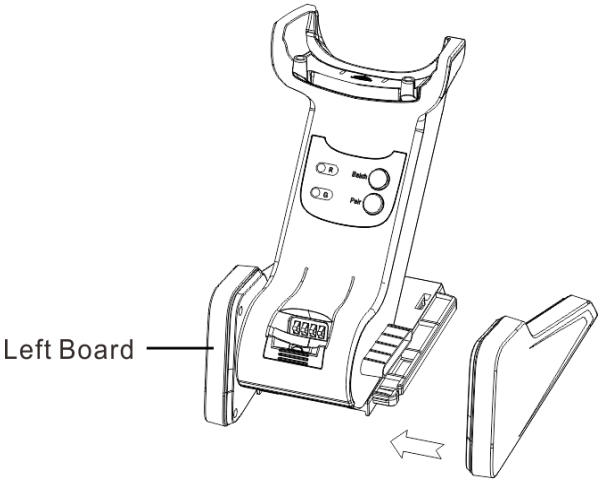

Wall Mount

1. Remove the plate from the chassis by pressing the plastic clip F in with an appropriate tool.

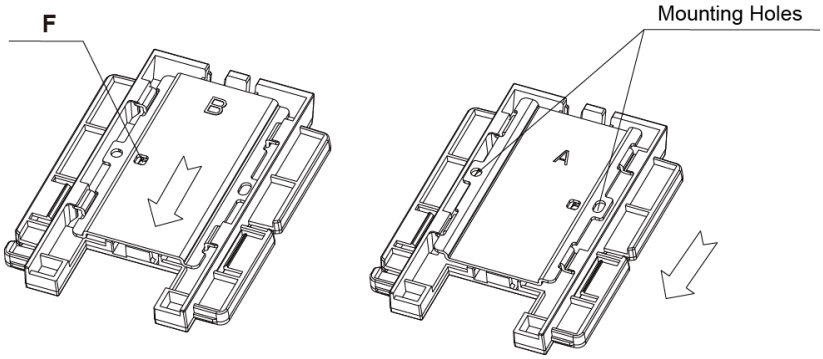

2. Install the two plastic wall anchors in a wall and use screws to secure the plate to the wall with its A side facing the wall. Slide the vertical cradle onto the plate.

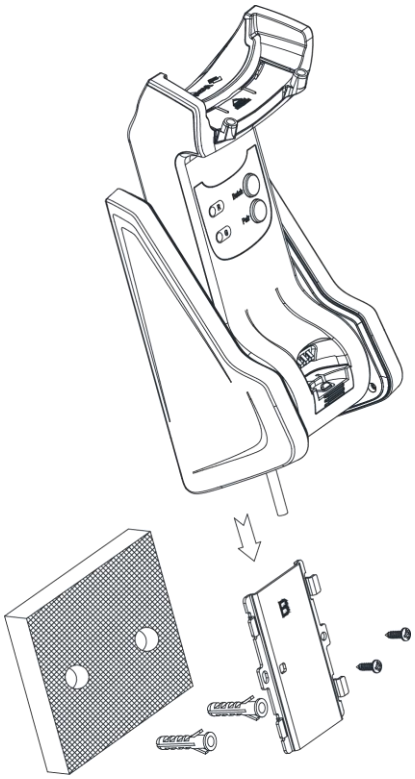

Connecting the Cradle to a Host

The cradle must be connected to a host in actual application, such as PC, POS or any intelligent terminal with USB or RS-232 port, using a communication cable (USB or RS-232 cable).

USB

USB port on the Host 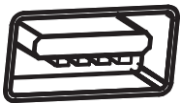

RS-232

RS-232 port on the Host

Note: Please check the port on the host and purchase the cable accordingly.

Using USB Cable

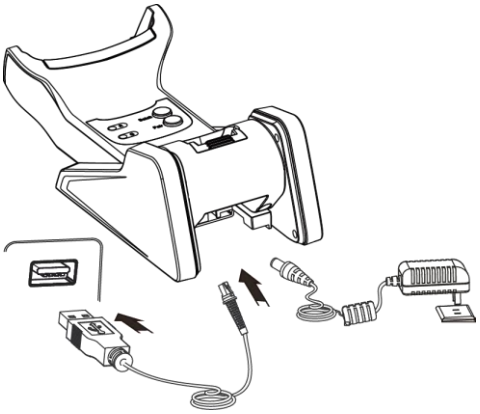

Connect the cradle to a Host using a USB cable with RJ45 and USB connectors:

1. Plug the RJ45 connector of the cable into the data port on the cradle.
2. Plug the USB connector of the cable into the USB port on the Host.
3. Plug the supplied power adapter into the power jack on the cradle.

Using RS-232 Cable

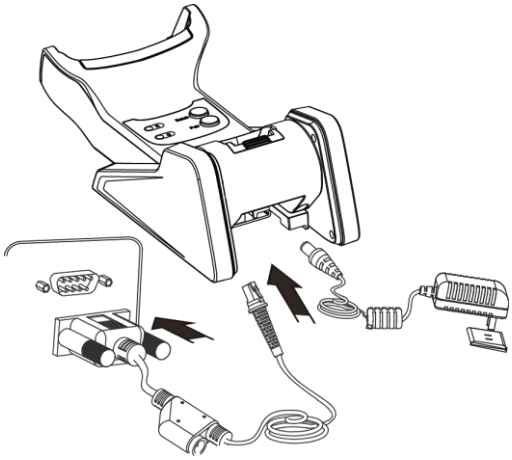

Connect the cradle to a Host using an RS-232 cable with RJ45 and RS-232 connectors and a power jack:

1. Plug the RJ45 connector of the cable into the data port on the cradle.
2. Plug the RS-232 connector of the cable into the RS-232 port on the Host.
3. Plug the supplied power adapter into the power jack on the cradle.

Charging the Scanner Battery

To charge the scanner battery, insert the scanner in a powered cradle. You can check the charge status with the red and green LEDs on the cradle.

Red LED steady on	No scanner placed on cradle
Red LED flashes	Charging in progress, low battery level
Green LED flashes	Charging in progress, medium battery level
Green LED steady on	Fully charged

Pairing the Scanner to a Cradle

Before configuring or using the scanner, you must pair it to a cradle first. A cradle can pair with up to seven scanners if Multipoint-to-Point mode is enabled.

You need to perform the pairing operation manually: After the scanner and cradle are turned on, insert the scanner in the cradle and then press the Pair button on the cradle. The scanner beeps on a successful pairing.

To unpair them, you may pair the scanner to another cradle, or scan the **Clear Pairing Info on Cradle** or **Clear Pairing Info on Scanner** barcode in Chapter 4.

Searching Paired Scanner(s)

After the scanner(s) and cradle are turned on, press the Pair button on the cradle and the paired scanner(s) will beep.

Wireless Communications

The scanner can communicate with a remote host using Bluetooth, or by pairing with a CD52 cradle that supports the following interefaces:

- ✧ Standard RS-232 connection to a host. For the cable connection instructions, see the “Using RS-232 Cable” section in this chapter. To learn how to configure RS-232 communication parameters, see Chapter 5.
- ✧ USB connection to a host. For the cable connection instructions, see the “Using USB Cable” section in this chapter. To learn how to configure USB communication parameters, see Chapter 6.

For wireless communication parameters, see Chapter 4.

Power On, Power Off, Reboot

Power on the scanner

Hold down the trigger on the scanner until it beeps.

Note: When using the scanner for the first time or after scanning the **Battery Off** barcode in Chapter 3, you MUST insert the scanner in a powered cradle to exit battery protection mode before turning it on.

Power off the scanner

Method 1: When in the Level scan mode, the scanner will automatically power off after 5 minutes of inactivity.

Method 2: Scan the **Power Off Scanner** barcode in Chapter 3.

Reboot the scanner

If the scanner stops responding to input or runs abnormally, use a straightened paperclip to press and hold the Reset button on the bottom of the scanner to reboot it.

Maintenance

- ✧ The scan window should be kept clean.
- ✧ Do not scratch the scan window.
- ✧ Use soft brush to remove the stain from the scan window.
- ✧ Use the soft cloth to clean the window, such as eyeglass cleaning cloth.
- ✧ Do not spray any liquid on the scan window.
- ✧ Do not use any detergent to clean other parts of the device except for water.

The warranty DOES NOT cover damages caused by inappropriate care and maintenance.

Scanning Instructions

When the scanner is in the Level scan mode, you can follow the steps below to scan a barcode:

1. Press and hold the Trigger. Then the scanner will project a red aiming pattern.

2. Aim the aiming pattern across the center of barcode.

3. Release the Trigger when the aiming pattern goes off. If the barcode is decoded successfully, the scanner will emit a good read beep and the decoded data will be sent to the Host.

Note: For barcodes of the same batch, the scanner keeps a very high success ratio in certain distance which is regarded as the optimal scanning distance.

Chapter 2 EasySet

EasySet, developed by Fujian Newland Auto-ID Tech. Co., Ltd., is a configuration tool for Newland's 1D/2D handheld barcode scanner, fixed mount barcode scanners and OEM scan engines. Its main features include:

- View device & configuration information of online device
- Configure device
- Update firmware of online device
- Load/modify existing XML configuration file; save current settings to an XML file
- Create/print/save programming barcodes to a PDF or Word file
- View/edit/save image stored on online device in the original image/BMP/JPG/TIFF format
- Send serial commands to online device and receive device response
- Supported languages: Chinese and English.

EasySet supports 32-bit/64-bit Microsoft WinXP/Win7/Win 8/Win 8.1/Win 10 operating systems.

EasySet can communicate with device via one of the following interface: RS-232, USB COM Port Emulation (UFCOM driver required), USB CDC (UFCOM driver required), USB DataPipe (UFCOM driver required), USB HID-POS.

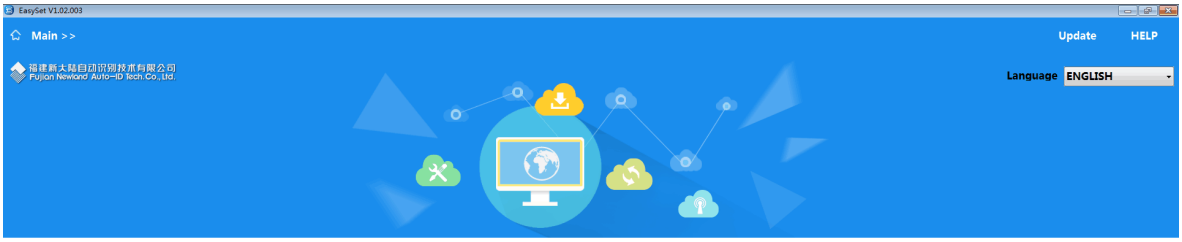

Online Device

Offline Device

Command Center

@SETUPE1

Enter Setup

Chapter 3 System Settings

Introduction

There are three ways to configure the HR52: Barcode programming, command programming and Easyset programming.

Barcode Programming

The HR52 can be configured by scanning programming barcodes. All user programmable features/options are described along with their programming barcodes/commands in the following sections.

This programming method is most straightforward. However, it requires manually scanning barcodes. As a result, errors are more likely to occur.

Command Programming

The HR52 can also be configured by serial commands (HEX) sent from the host device.

Users can design an application program to send those command strings to the scanners to perform device configuration.

EasySet Programming

Besides the two methods mentioned above, you can conveniently perform scanner configuration through EasySet too. EasySet is a Windows-based configuration tool particularly designed for Newland products, enabling users to gain access to decoded data and captured images and to configure scanners. For more information about this tool, refer to the *EasySet User Guide*.

Before programming the scanner, you need to pair it to a cradle first. When programming the scanner with serial commands or EasySet, you need to insert it in the paired cradle.

@SETUPE0

**** Exit Setup**

Programming Barcode/ Programming Command/Function

The figure above is an example that shows you the programming barcode and command for the Enter Setup function:

1. The **No Case Conversion** barcode.

2. The **No Case Conversion** command.

3. The description of feature/option.

4. ** indicates factory default settings.

Note: "@" included in the programming command indicates permanent setting which means the setting will not be lost by removing power from the scanner or turning off or rebooting it; whereas "#" included in the programming command indicates temporary setting which means the setting will be lost by removing power from the scanner or turning off or rebooting it.

Use of Programming Command

Besides the barcode programming method, the scanner can also be configured by serial commands (HEX) sent from the host device. **All commands must be entered in uppercase letters**.

Command Syntax

Prefix StorageType Tag SubTag {Data} [,SubTag {Data}] [;Tag SubTag {Data}] […] Suffix

Prefix: "~<SOH>0000" (HEX: **7E 01 30 30 30 30**), 6 characters.

StorageType: "@" (HEX: **40**) or "#" (HEX: **23**), 1 character. "@" means permanent setting which will not be lost by removing power from the scanner or rebooting it; "#" means temporary setting which will be lost by removing power from the scanner or rebooting it.

Tag: A 3-character case-sensitive field that identifies the desired command group. For example, all USB HID Keyboard configuration settings are identified with a Tag of KBW.

SubTag: A 3-character case-sensitive field that identifies the desired parameter within the tag group. For example, the SubTag for the keyboard layout is CTY.

Data: The value for a feature or parameter setting, identified by the Tag and SubTag.

Suffix: ";<ETX>" (HEX: **3B 03**), 2 characters.

Multiple commands can be issued within one Prefix/Suffix sequence. For configuration commands, only the **Tag**, **SubTag**, and **Data** fields must be repeated for each command in sequence. If an additional command is to be applied to the same Tag, then the command is separated with a comma (,) and only the **SubTag** and **Data** fields of the additional commands are issued. If the additional command requires a different **Tag** field, the command is separated from previous command by a semicolon (;).

Query Commands

For query commands, the entry in the **Data** field in the syntax above is one of the following characters means:

* (HEX: **2A**) What is the scanner's current value for the setting(s).

& (HEX: **26**) What is the factory default value for the setting(s).

^ (HEX: **5E**) What is the range of possible values for the setting(s).

The value of the **StoreType** field in a query command can be either "@" (HEX: **40**) or "**#**" (HEX: **23**).

A query command with the **SubTag** field omitted means to query all the settings concerning a tag. For example, to query all the current settings about Code 11, you should enter **7E 01 30 30 30 30 40 43 31 31 2A 3B 03** (i.e. ~<SOH>0000@C11*;<ETX>).

Responses

Different from command sequence, the prefix of a response consists of the six characters of "<STX><SOH>0000" (HEX: **02 01 30 30 30 30**).

The scanner responds to serial commands with one of the following three responses:

<ACK> (HEX: **06**) Indicates a good command which has been processed.

<NAK> (HEX: **15**) Indicates a good configuration command with its **Data** field entry out of the allowable range for this Tag and SubTag combination (e.g. an entry for an inter-keystroke delay of 100 when the field will only allow 2 digits), or an invalid query command.

<ENQ> (HEX: **05**) Indicates an invalid Tag or SubTag command.

When responding, the scanner echoes back the command sequence with the status character above inserted directly before each of the punctuation marks (the comma or semicolon) in the command.

Examples

Example 1: Enable Code 11, set the minimum and maximum lengths to 12 and 22 respectively.

Enter: **7E 01 30 30 30 30 40 43 31 31 45 4E 41 31 2C 4D 49 4E 31 32 2C 4D 41 58 32 32 3B 03**
(~<SOH>0000@C11ENA1,MIN12,MAX22;<ETX>)

Response: **02 01 30 30 30 30 40 43 31 31 45 4E 41 31 06 2C 4D 49 4E 31 32 06 2C 4D 41 58 32 32 06 3B 03**
(<STX><SOH>0000@C11ENA1<ACK>,MIN12<ACK>,MAX22<ACK>;<ETX>)

Example 2: Query the current minimum and maximum lengths of Code 11.

Enter: **7E 01 30 30 30 30 40 43 31 31 4D 49 4E 2A 2C 4D 41 58 2A 3B 03**
(~<SOH>0000@C11MIN*,MAX*;<ETX>)

Response: **02 01 30 30 30 30 40 43 31 31 4D 49 4E 31 32 06 2C 4D 41 58 32 32 06 3B 03**
(<STX><SOH>0000@C11MIN12<ACK>,MAX22<ACK>;<ETX>)

@SETUPE1

Enter Setup

Use of Programming Barcodes

Scanning the **Enter Setup** barcode can enable the scanner to enter the setup mode. Then you can scan a number of programming barcodes to configure your scanner. To exit the setup mode, scan the **Exit Setup** barcode or a non-programing barcode, or reboot the scanner.

@SETUPE0

**** Exit Setup**

@SETUPE1

Enter Setup

Programming barcode data (i.e. the characters under programming barcode) can be transmitted to the host device. You may scan the appropriate barcode below to enable or disable the transmission of programming barcode data to the host device.

#SETUPT0

**** Do Not Transmit Programming Barcode Data**

#SETUPT1

Transmit Programming Barcode Data

@SETUPE0

**** Exit Setup**

@SETUPE1

Enter Setup

Illumination

A couple of illumination options are provided to improve the lighting conditions during every image capture:

Normal: Illumination LEDs are turned on during image capture.

Always On: Illumination LEDs keep ON after the scanner is powered on.

Off: Illumination LEDs are OFF all the time.

@ILLSCN1

**** Normal**

@ILLSCN0

Off

@ILLSCN2

Always On

@SETUPE0

**** Exit Setup**

@SETUPE1

Enter Setup

Aiming

When scanning/capturing image, the scanner projects an aiming pattern which allows positioning the target barcode within its field of view and thus makes decoding easier.

Normal: The scanner projects an aiming pattern only during barcode scanning/capture.

Always On: Aiming pattern is constantly on after the scanner is powered on.

Off: Aiming pattern is off all the time.

@AMLENA1

**** Normal**

@AMLENA0

Off

@AMLENA2

Always On

Good Read LED

The green LED can be programmed to be On or Off to indicate good read.

@GRLENA1

**** On**

@GRLENA0

Off

@SETUPE0

**** Exit Setup**

@SETUPE1

Enter Setup

Good Read LED Duration

This parameter sets the amount of time that the Good Read LED to remain on following a good read.

@GRLDUR20

**** Short (20ms)**

@GRLDUR120

Medium (120ms)

@GRLDUR220

Long (220ms)

@GRLDUR320

Prolonged (320ms)

@GRLDUR

Custom (1 - 2,500ms）

Example

Set the Good Read LED duration to 800ms:

1. Scan the **Enter Setup** barcode.
2. Scan the **Custom** barcode.
3. Scan the numeric barcodes “8”, “0” and “0” from the “Digit Barcodes” section in Appendix.
4. Scan the **Save** barcode from the “Save/Cancel Barcodes” section in Appendix.
5. Scan the **Exit Setup** barcode.

@SETUPE0

**** Exit Setup**

@SETUPE1

Enter Setup

Power On Beep

The scanner can be programmed to beep when it is powered on. Scan the **Off** barcode if you do not want a power on beep.

@PWBENA1

**** On**

@PWBENA0

Off

Good Read Beep

Scanning the **Off** barcode can turn off the beep that indicates successful decode; scanning the **On** barcode can turn it back on.

@GRBENA1

**** On**

@GRBENA0

Off

@SETUPE0

**** Exit Setup**

@SETUPE1

Enter Setup

Good Read Beep Duration

This parameter sets the length of the beep the scanner emits on a good read. It is programmable in 1ms increments from 20ms to 300ms.

@GRBDUR40

Short (40ms)

@GRBDUR80

**** Medium (80ms)**

@GRBDUR120

Long (120ms)

@GRBDUR

Custom (20 – 300ms)

Example

Set the Good Read Beep duration to 200ms:

1. Scan the **Enter Setup** barcode.
2. Scan the **Custom** barcode.
3. Scan the numeric barcodes “2”, “0” and “0” from the “Digit Barcodes” section in Appendix.
4. Scan the **Save** barcode from the “Save/Cancel Barcodes” section in Appendix.
5. Scan the **Exit Setup** barcode.

@SETUPE0

**** Exit Setup**

@SETUPE1

Enter Setup

Good Read Beep Frequency

This parameter is programmable in 1Hz increments from 20Hz to 20,000Hz.

@GRBFRQ800

Extra Low (800Hz)

@GRBFRQ1600

Low (1600Hz)

@GRBFRQ2730

**** Medium (2730Hz)**

@GRBFRQ4200

High (4200Hz)

@GRBFRQ

Custom (20 - 20,000Hz)

Example

Set the Good Read Beep frequency to 2,000Hz:

1. Scan the **Enter Setup** barcode.
2. Scan the **Custom** barcode.
3. Scan the numeric barcodes “2”, “0”, “0” and “0” from the “Digit Barcodes” section in Appendix.
4. Scan the **Save** barcode from the “Save/Cancel Barcodes” section in Appendix.
5. Scan the **Exit Setup** barcode.

@SETUPE0

**** Exit Setup**

@SETUPE1

Enter Setup

Good Read Beep Volume

@GRBVOL0

**** Loud**

@GRBVOL1

Medium

@GRBVOL2

Low

Good Read Vibration

You may choose whether or not to let the scanner vibrate when a barcode is successfully read by scanning the appropriate barcode below.

@GRVENA1

On

@GRVENA0

**** Off**

@SETUPE0

**** Exit Setup**

@SETUPE1

Enter Setup

Good Read Vibration Duration

This parameter sets the length for the Good Read Vibration. It is programmable in 1ms increments from 1ms to 2,500ms.

@GRVDUR40

Short (40ms)

@GRVDUR80

**** Medium (80ms)**

@GRVDUR120

Long (120ms)

@GRVDUR

Custom (1 – 2,500ms)

Example

Set the Good Read Vibration duration to 200ms:

1. Scan the **Enter Setup** barcode.
2. Scan the **Custom** barcode.
3. Scan the numeric barcodes “2”, “0” and “0” from the “Digit Barcodes” section in Appendix.
4. Scan the **Save** barcode from the “Save/Cancel Barcodes” section in Appendix.
5. Scan the **Exit Setup** barcode.

@SETUPE0

**** Exit Setup**

@SETUPE1

Enter Setup

Scan Mode

Level Mode: A trigger pull activates a decode session. The decode session continues until a barcode is decoded or the decode session timeout expires or you release the trigger.

Sense Mode: The scanner activates a decode session every time it detects a barcode presented to it. The decode session continues until a barcode is decoded or the decode session timeout expires. **Reread Timeout** can avoid undesired rereading of same barcode in a given period of time. **Sensitivity** can change the Sense Mode's sensibility to changes in images captured. **Image Stabilization Timeout** gives the scanner time to adapt to ambient environment after it decodes a barcode and "looks" for another.

Continuous Mode: The scanner automatically starts one decode session after another. To suspend/resume barcode reading, simply press the trigger. **Reread Timeout** can avoid undesired rereading of same barcode in a given period of time.

Pulse Mode: When the trigger is pulled and released, scanning is activated until a barcode is decoded or the decode session timeout expires (The decode session timeout begins when the trigger is released).

Batch Mode: A trigger pull activates a round of multiple decode sessions. This round of multiple scans continues until you release the trigger. Rereading the same barcode is not allowed in the same round.

@SCNMOD0

**** Level Mode**

@SCNMOD2

Sense Mode

@SCNMOD3

Continuous Mode

@SCNMOD4

Pulse Mode

@SCNMOD7

Batch Mode

@SETUPE0

**** Exit Setup**

Decode Session Timeout

This parameter sets the maximum time decode session continues during a scan attempt. It is programmable in 1ms increments from 100ms to 3,600,000ms. When it is set to 0, the timeout is infinite. The default setting is 3,000ms.

@ORTSET
Decode Session Timeout

Example

Set the decode session timeout to 1,500ms:

1. Scan the **Enter Setup** barcode.
2. Scan the **Decode Session Timeout** barcode.
3. Scan the numeric barcodes “1”, “5”, “0” and “0” from the “Digit Barcodes” section in Appendix.
4. Scan the **Save** barcode from the “Save/Cancel Barcodes” section in Appendix.
5. Scan the **Exit Setup** barcode.

@SETUPE1

Enter Setup

Image Stabilization Timeout (Sense Mode)

This parameter defines the amount of time the scanner will spend adapting to ambient environment after it decodes a barcode and “looks” for another. It is programmable in 1ms increments from 0ms to 3,000ms. The default setting is 200ms.

@SENIST

Image Stabilization Timeout

Example

Set the image stabilization timeout to 800ms:

1. Scan the **Enter Setup** barcode.
2. Scan the **Image Stabilization Timeout** barcode.
3. Scan the numeric barcodes “8”, “0” and “0” from the “Digit Barcodes” section in Appendix.
4. Scan the **Save** barcode from the “Save/Cancel Barcodes” section in Appendix.
5. Scan the **Exit Setup** barcode.

@SETUPE0

**** Exit Setup**

@SETUPE1

Enter Setup

Reread Timeout

Reread Timeout can avoid undesired rereading of same barcode in a given period of time. This feature is only applicable to the Sense and Continuous modes.

Enable Reread Timeout: Do not allow the scanner to reread same barcode before the reread timeout expires.

Disable Reread Timeout: Allow the scanner to reread same barcode.

@RRDENA1

Enable Reread Timeout

@RRDENA0

**** Disable Reread Timeout**

The following parameter sets the time interval between two successive reads on same barcode. It is programmable in 1ms increments from 0ms to 3,600,000ms. When it is set to a value greater than 3,000, the timeout for rereading same programming barcode is limited to 3,000ms. The default setting is 1,500ms.

@RRDDUR

Set Reread Timeout

Example

Set the reread timeout to 1,000ms:

1. Scan the **Enter Setup** barcode.
2. Scan the **Set Reread Timeout** barcode.
3. Scan the numeric barcodes “1”, “0”, “0” and “0” from the “Digit Barcodes” section in Appendix.
4. Scan the **Save** barcode from the “Save/Cancel Barcodes” section in Appendix.
5. Scan the **Exit Setup** barcode.

@SETUPE0

**** Exit Setup**

You may wish to restart the reread timeout when the scanner encounters the same barcode that was decoded in the last scan session before the reread timeout expires. To enable this feature, scan the **Reread Timeout Reset On** barcode. This feature is only effective when **Reread Timeout** is enabled.

@RRDREN1
Reread Timeout Reset On

@RRDREN0
**** Reread Timeout Reset Off**

Image Decoding Timeout

Image Decoding Timeout specifies the maximum time the scanner will spend decoding an image. This parameter is programmable in 1ms increments from 1ms to 3,000ms. The default timeout is 500ms.

@DETSET
Image Decoding Timeout

Example

Set the image decoding timeout to 1,000ms:

1. Scan the **Enter Setup** barcode.
2. Scan the **Image Decoding Timeout** barcode.
3. Scan the numeric barcodes “1”, “0”, “0” and “0” from the “Digit Barcodes” section in Appendix.
4. Scan the **Save** barcode from the “Save/Cancel Barcodes” section in Appendix.
5. Scan the **Exit Setup** barcode.

@SETUPE1

Enter Setup

Sensitivity (Sense Mode)

This specifies the degree of acuteness of the scanner's response to changes in images captured. There are 20 levels to choose from. The smaller the value, the higher the sensitivity and the lower requirement in image change to trigger the scanner. You can select an appropriate degree of sensitivity that fits your application environment. This feature is only applicable to the Sense mode.

@SENLVL14

Low Sensitivity

@SENLVL11

**** Medium Sensitivity**

@SENLVL8

High Sensitivity

@SENLVL5

Enhanced Sensitivity

@SENLVL

Custom Sensitivity (Level 1-20)

Example

Set the sensitivity to Level 10:

1. Scan the **Enter Setup** barcode.
2. Scan the **Custom Sensitivity** barcode.
3. Scan the numeric barcodes "1" and "0" from the "Digit Barcodes" section in Appendix.
4. Scan the **Save** barcode from the "Save/Cancel Barcodes" section in Appendix.
5. Scan the **Exit Setup** barcode.

@SETUPE0

**** Exit Setup**

@SETUPE1

Enter Setup

Scanning Preference

Normal Mode: Select this mode when reading barcodes on paper.

Screen Mode: Select this mode when reading barcodes on the screen.

@EXPLVL0

**** Normal Mode**

@EXPLVL2

Screen Mode

Read Barcode On/Off

Sending the Read Barcode Off command **~<SOH>0000#SCNENA0;<ETX>** to the scanner can disable it from reading barcode, and the scanner is unable to scan barcode unless you send the Read Barcode On command **~<SOH>0000#SCNENA1;<ETX>** to it or power cycle it. By default, Read Barcode is On.

Make a Beeping Sound

You may wish to force the scanner to beep upon a command sent from the host. A beeping sound is made to gain a user's attention to an error or other important event.

BEEPONxxxFyyyT (xxx: The desired frequency, 1-20,000Hz; yyy: The desired duration, 1-10,000ms)

Example: Make a 50ms beep at 2,000Hz

Enter: **7E 01 30 30 30 30 40 42 45 45 50 4F 4E 32 30 30 30 46 35 30 54 3B 03**
(~<SOH>0000#BEEPON2000F50T;<ETX>)

Response: **02 01 30 30 30 30 40 42 45 45 50 4F 4E 32 30 30 30 46 35 30 54 06 3B 03**
(<STX><SOH>0000#BEEPON2000F50T<ACK>;<ETX>)

@SETUPE0

**** Exit Setup**

@SETUPE1

Enter Setup

Smart Stand Mode

After this feature is turned on, the scanner will switch from its current scan mode to the Sense mode when it is inserted in the stand, and it will operate in its previous scan mode when it is removed from the stand.

@SMTENA0

Off

@SMTENA1

**** On**

Decode Area

Whole Area Decoding: The scanner attempts to decode barcode(s) within its field of view, from the center to the periphery, and transmits the barcode that has been first decoded.

Specific Area Decoding: The scanner attempts to read barcode(s) within a specified decoding area and transmits the barcode that has been first decoded. This option allows the scanner to narrow its field of view to make sure it reads only those barcodes intended by the user. For instance, if multiple barcodes are placed closely together, specific area decoding in conjunction with appropriate pre-defined decoding area will insure that only the desired barcode is read.

Acuread Decoding: The scanner only decodes the barcode aimed squarely by the aiming pattern. For those using a crosshair aiming pattern, only the barcode aimed by the center of crosshair will be decoded.

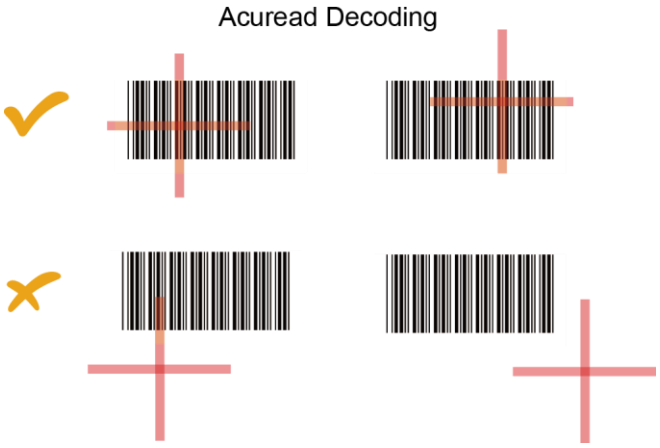

@SETUPE0

**** Exit Setup**

@SETUPE1

Enter Setup

@CADENA0

**** Whole Area Decoding**

@CADENA1

Specific Area Decoding

@CADENA2

Acuread Decoding

If **Specific Area Decoding** is enabled, the scanner only reads barcodes that intersect the predefined decoding area.

The default decoding area is an area of 40% top, 60% bottom, 40% left and 60% right of the scanner's field of view

You can define the decoding area using the **Top of Decoding Area**, **Bottom of Decoding Area**, **Left of Decoding Area** and **Right of Decoding Area** barcodes as well as numeric barcode(s) that represent(s) a desired percentage (0-100). The value of Bottom must be greater than that of Top; the value of Right must be greater than that of Left.

@CADTOP

Top of Decoding Area

@CADBOT

Bottom of Decoding Area

@CADLEF

Left of Decoding Area

@CADRIG

Right of Decoding Area

@SETUPE0

**** Exit Setup**

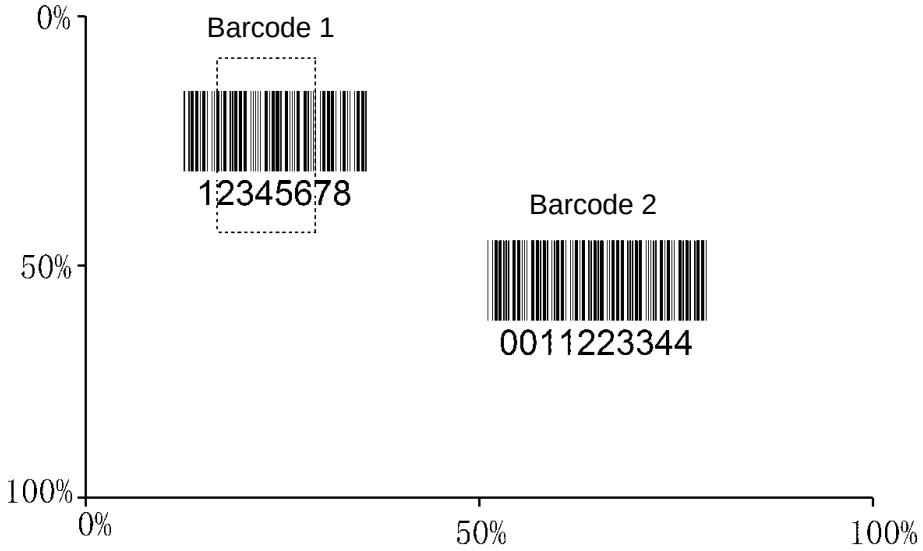

Example

Program the scanner to only read Barcode 1 in the figure above by setting the decoding area to 10% top, 45% bottom, 15% left and 30% right:

1. Scan the **Enter Setup** barcode.
2. Scan the **Top of Decoding Area** barcode.
3. Scan the numeric barcode “0” from the “Digit Barcodes” section in Appendix.
4. Scan the **Save** barcode from the “Save/Cancel Barcodes” section in Appendix.
5. Scan the **Bottom of Decoding Area** barcode.
6. Scan the numeric barcodes “4” and “5” from the “Digit Barcodes” section in Appendix.
7. Scan the **Save** barcode from the “Save/Cancel Barcodes” section in Appendix.
8. Scan the **Top of Decoding Area** barcode.
9. Scan the numeric barcodes “1” and “0” from the “Digit Barcodes” section in Appendix.
10. Scan the **Save** barcode from the “Save/Cancel Barcodes” section in Appendix.
11. Scan the **Left of Decoding Area** barcode.
12. Scan the numeric barcode “0” from the “Digit Barcodes” section in Appendix.
13. Scan the **Save** barcode from the “Save/Cancel Barcodes” section in Appendix.
14. Scan the **Right of Decoding Area** barcode.
15. Scan the numeric barcodes “3” and “0” from the “Digit Barcodes” section in Appendix.
16. Scan the **Save** barcode from the “Save/Cancel Barcodes” section in Appendix.
17. Scan the **Left of Decoding Area** barcode.
18. Scan the numeric barcodes “1” and “5” from the “Digit Barcodes” section in Appendix.
19. Scan the **Save** barcode from the “Save/Cancel Barcodes” section in Appendix.
20. Scan the **Exit Setup** barcode.

@SETUPE1

Enter Setup

Image Flipping

@MIRROR0

**** Do Not Flip**

@MIRROR1

Flip Horizontally

@MIRROR2

Flip Vertically

@MIRROR3

Flip Horizontally & Vertically

Example of image not flipped

Example of image flipped horizontally

Example of image flipped vertically

Example of image flipped horizontally & vertically

@SETUPE0

**** Exit Setup**

@SETUPE1

Enter Setup

Bad Read Message

You may scan the appropriate barcode below to select whether or not to send a bad read message (user-programmable) when a good read does not occur before trigger release, or the decode session timeout expires.

@NGRENA0

**** Bad Read Message OFF**

@NGRENA1

Bad Read Message ON

Set Bad Read Message

A bad read message can contain up to 7 characters (HEX values from 0x00 to 0xFF). To set a bad read message, scan the **Set Bad Read Message** barcode, the numeric barcodes representing the hexadecimal values of desired character(s) and the **Save** barcode. The default setting is “NG”.

@NGRSET

Set Bad Read Message

Example

Set the bad read message to “F” (HEX: 0x46):

1. Scan the **Enter Setup** barcode.
2. Scan the **Set Bad Read Message** barcode.
3. Scan the numeric barcodes “4” and “6” from the “Digit Barcodes” section in Appendix.
4. Scan the **Save** barcode from the “Save/Cancel Barcodes” section in Appendix.
5. Scan the **Exit Setup** barcode.

@SETUPE0

**** Exit Setup**

@SETUPE1

Enter Setup

Power Off/Battery Off

@PWROFF

Power Off Scanner

@TESTMD3

Battery Off

(For Long-term Storage/Shipping)

Note: After scanning the **Battery Off** barcode, you MUST insert the scanner in a powered cradle to exit battery protection mode before turning it on.

Default Settings

Factory Defaults

Scanning the **Reset Scanner**/**Reset Cradle** barcode can restore the scanner/cradle to the factory defaults.

You may need to reset your scanner/cradle when:

1. Scanner/cradle is not properly configured so that the scanner fails to decode barcodes or to communicate with the cradle.
2. you forget previous configuration and want to avoid its impact.
3. functions that are rarely used have been enabled for the time being.

@FACDEF

Reset Scanner

@BASFDF

Reset Cradle

@SETUPE0

**** Exit Setup**

@SETUPE1

Enter Setup

Custom Defaults

Scanning the **Restore All Custom Defaults** barcode can reset all parameters to the custom defaults. Scanning the **Save as Custom Defaults** barcode can set the current settings as custom defaults.

Custom defaults are stored in the non-volatile memory.

@CUSSAV

Save as Custom Defaults

@CUSDEF

Restore All Custom Defaults

Restoring the scanner to the factory defaults will not remove the custom defaults from the scanner.

@SETUPE0

**** Exit Setup**

@SETUPE1

Enter Setup

Query Scanner Information

After scanning the barcode below, the scanner information (including product name, firmware version, decoder version, hardware version, product serial number, OEM serial number and manufacturing date) will be sent to the host device.

@QRYSYS

Query Scanner Information

Query Product Name

@QRYPDN

Query Product Name

Query Firmware Version

@QRYFWV

Query Firmware Version

Query Decoder Version

@QRYDCV

Query Decoder Version

@SETUPE0

**** Exit Setup**

@SETUPE1

Enter Setup

Query Data Formatter Version

@QRYDFM

Query Data Formatter Version

Query Hardware Version

@QRYHWV

Query Hardware Version

Query Serial Number

@QRYPSN

Query Serial Number

Query Manufacturing Date

@QRYDAT

Query Manufacturing Date

@SETUPE0

**** Exit Setup**

@SETUPE1

Enter Setup

Query OEM Serial Number

@QRYESN

Query OEM Serial Number

Query Cradle Information

After scanning the barcode below, the cradle information (including model number, firmware version, hardware information, product serial number, and manufacturing date) will be sent to the host device.

@BASQSY

Query Cradle Information

Query Model Number

@BASQHN

Query Model Numer

Query Firmware Version

@BASQFW

Query Firmware Version

@SETUPE0

**** Exit Setup**

@SETUPE1

Enter Setup

Query Hardware Information

@BASQHW

Query Hardware Information

Query Serial Number

@BASQSN

Query Serial Number

Query OEM Serial Number (ESN)

@BASQES

Query OEM Serial Number

Query Manufacturing Date

@QRYDAT

Query Manufacturing Date

@SETUPE0

**** Exit Setup**

@SETUPE1

Enter Setup

Query Remaining Battery of Scanner

After scanning the barcode below, the percentage of battery power remaining will be sent to the host device.

@WLSQPW

Query Remaining Battery of Scanner

@SETUPE0

**** Exit Setup**

@SETUPE1

Enter Setup

Chapter 4 Wireless Communications

Operating Modes

The scanner provides the following two operating modes:

Bluetooth HID Mode allows your scanner to communicate with a remote host using Bluetooth. You must first pair your scanner to the host before these two Bluetooth devices can communicate with each other. All features available for USB HID Keyboard are applicable to Bluetooth HID.

Cradle Mode allows your scanner to communicate with a remote host by pairing with a cradle.

@INTERF12

**** Cradle Mode**

@INTERF10

Bluetooth HID Mode

Batch Mode

Batch Mode Options

Off: The scanner attempts to transmit every barcode you scan. When you are out of service range, the scanned data will be lost.

Automatic Batch Mode: When in service range, the scanner attempts to transmit every barcode you scan. When out of range, the scanner stores the scanned data in the flash memory. Once you are back to service range, the scanner will automatically transmit the stored data and then remove it from the flash memory after transmission is done.

Manual Batch Mode: Scanned data will be stored in the flash memory no matter whether you are in service range or not. You may send the stored data to the host in one of the following ways: (i) press the Batch button on the cradle after inserting the scanner in cradle; (ii) scan the **Transmit Stored Data** barcode; or (iii) send the corresponding serial command to the scanner. The scanner will automatically remove the stored data from the flash memory after transmission is done if the **Auto Clear Stored Data after Transmission** feature is turned on.

@SETUPE0

**** Exit Setup**

@SETUPE1

Enter Setup

@WLSBAT0

**** Off**

@WLSBAT1

Automatic Batch Mode

@WLSBAT2

Manual Batch Mode

Prevent Same Barcode Storage

This feature is available only when scanning barcodes in the Automatic or Manual Batch mode.

On: The scanner discards the data and generates an error beep when encountering a barcode that has existed in the flash memory.

Off: The scanner stores the data when encountering a barcode that has existed in the flash memory.

@WLSSSE0

**** Off**

@WLSSSE1

On

@SETUPE0

**** Exit Setup**

@SETUPE1

Enter Setup

Batch Mode Transmit Delay

Sometimes when multiple barcodes stored in the flash memory are sent to the host, the transmission of those barcodes is too fast for the application to process. To program a transmit delay between barcodes, scan one of the following delays.

@WLSBTD0

**** No Transmit Delay (0ms)**

@WLSBTD50

Short Transmit Delay (50ms)

@WLSBTD100

Medium Transmit Delay (100ms)

@WLSBTD150

Long Transmit Delay (150ms)

@WLSBTD

Custom Transmit Delay (0-10,000ms)

Example

Set the batch mode transmit delay to 200ms:

1. Scan the **Enter Setup** barcode.
2. Scan the **Custom Transmit Delay** barcode.
3. Scan the numeric barcodes “2”, “0” and “0” from the “Digit Barcodes” section in Appendix.
4. Scan the **Save** barcode from the “Save/Cancel Barcodes” section in Appendix.
5. Scan the **Exit Setup** barcode.

@SETUPE0

**** Exit Setup**

@SETUPE1

Enter Setup

End of Transmission Message for Batch Mode

You may scan the appropriate barcode below to select whether or not to send an end of transmission message (user-programmable) to notify the host when transmission of all stored data is done.

@WLSBTT0

**** End of Transmission Message Off**

@WLSBTT1

End of Transmission Message On

An end of transmission message can contain up to 10 characters (HEX values from 0x00 to 0xFF). To set an end of transmission message, scan the **Set End of Transmission Message** barcode, the numeric barcodes representing the hexadecimal values of desired character(s) and the **Save** barcode. The default setting is “EOT”.

@NGRSET

Set End of Transmission Message

Example

Set the end of transmission message to “END” (HEX: 0x45, 0x4E, 0x44):

1. Scan the **Enter Setup** barcode.
2. Scan the **Set End of Transmission Message** barcode.
3. Scan the numeric barcodes “4”, “5”, “4”, “E”, “4” and “4” from the “Digit Barcodes” section in Appendix.
4. Scan the **Save** barcode from the “Save/Cancel Barcodes” section in Appendix.
5. Scan the **Exit Setup** barcode.

@SETUPE0

**** Exit Setup**

@SETUPE1

Enter Setup

Transmit Stored Data

You may scan the barcode below to send the stored data in the flash memory to the host.

@WLSSBT

Transmit Stored Data

Auto Clear Stored Data after Transmission

You may scan the appropriate barcode below to choose whether to clear or keep the stored data in the flash memory after transmission This feature is only available to the Manual Batch mode.

@WLSCLE0

**** Off**

@WLSCLE1

On

Query/Clear Stored Data in Flash

@WLSQFC

Query the Number of Stored Barcodes

@WLSCLF

Clear All Stored Data

@SETUPE0

**** Exit Setup**

@SETUPE1

Enter Setup

Retransmission

If the Transmission feature is on, the scanner awaits an ACK response from the host following a data packet transmission, and resends the packet when it receives an NAK response or the retransmission timeout expires. Note that Data Packing must be enabled for this feature to function (See the ‘‘Data Packing Options’’ in Chaper 9 to learn how to enable it).

@WLSRTE0

**** Retransmission Off**

@WLSRTE1

Retransmission On

Transmission Timeout

This specifies the amount of time the scanner waits for an ACK response from the host following a data packet transmission. It is programmable in 1ms increments from 200ms to 10,000ms. The default value is 200ms. Note that the Retransmission feature must be turned on for this to function.

@WLSRTT

Set Transmission Timeout

Example

Set the transmission timeout to 300ms:

1. Scan the **Enter Setup** barcode.
2. Scan the **Set Transmission Timeout** barcode.
3. Scan the numeric barcodes “3”, “0” and “0” from the “Digit Barcodes” section in Appendix.
4. Scan the **Save** barcode from the “Save/Cancel Barcodes” section in Appendix.
5. Scan the **Exit Setup** barcode.

@SETUPE0

**** Exit Setup**

Retransmission Count

This parameter specifies the number of times the scanner resends a data packet when it awaits an ACK response from the host. The selection range is from 1 to 10 retransmissions. The default value is 3 (retransmissions). Note that the Retransmission feature must be turned on for this to function.

@WLSRTN
Set Retransmission Count

Example

Set the retransmission count to 5:

1. Scan the **Enter Setup** barcode.
2. Scan the **Set Retransmission Timeout** barcode.
3. Scan the numeric barcodes “3”, “0” and “0” from the “Digit Barcodes” section in Appendix.
4. Scan the **Save** barcode from the “Save/Cancel Barcodes” section in Appendix.
5. Scan the **Exit Setup** barcode.

@SETUPE1

Enter Setup

Scanner(s) to Cradle Support

Wireless Communication Modes

Point-to-Point Mode: Only one scanner can be paired to one cradle at a time.

Multiple-to-Point Mode: Up to seven scanners can be paired to one cradle.

@BASMPM0

**** Point-to-Point Mode**

@BASMPM1

Multiple-to-Point Mode

Clear Pairing Info on Scanner/Cradle

@BASCLP

Clear Pairing Info on Cradle

@WLSCLP

Clear Pairing Info on Scanner

@SETUPE0

**** Exit Setup**

@SETUPE1

Enter Setup

Set Date and Time

You may use the following command to set the date and time on your scanner:

WLSTIMyyyymmddhhmmss (yyyy: The desired year; mm: The desired month; dd: The desired day; mm: The desired month; ddmmss: The desired time)

Example: Set the date to February 5th 2018 and time to 10:30:11

Enter: ~<SOH>0000@WLSTIM20180205103011;<ETX>

Query Current Date and Time

After scanning the barcode below, the current date and time in YYYYMMDDHHMMSS format will be sent to the host device. For example, query result “20180205103011” means February 5th 2018 10:30:11.

@WLSTMQ

Query Current Date and Time

Time Stamp

You can select whether or not to send date & time before each scanned data by scanning the appropriate barcode below.

@WLSTSE0

**** Do Not Send Time Stamp**

@WLSTSE1

Send Time Stamp

@SETUPE0

**** Exit Setup**

@SETUPE1

Enter Setup

Set Time Stamp Format

@WLSTSF0

**** Format 1: (YYYY/MM/DD,HH:MM:SS)**

(example: 2018/01/23,10:30:20)

@WLSTSF1

Format 2: (DD/MM/YYYY,HH:MM:SS)

(example: 23/01/2018,10:30:20)

@WLSTSF2

Format 3: (MM/DD/YYYY,HH:MM:SS)

(example: 01/23/2018,10:30:20)

@SETUPE0

**** Exit Setup**

@SETUPE1

Enter Setup

Chapter 5 RS-232 Interface

Introduction

When the cradle is connected to the RS-232 port of a host device, you need to set communication parameters (including baud rate, parity check, data bit and stop bit) on the cradle to match the host device so that two devices can communicate with each other.

Baud Rate

Baud rate is the number of bits of data transmitted per second. Set the baud rate to match the host requirements.

@232BAD8

115200

@232BAD7

57600

@232BAD6

38400

@232BAD5

19200

@232BAD4

14400

@232BAD3

**** 9600**

@SETUPE0

**** Exit Setup**

@SETUPE1

Enter Setup

@232BAD2

4800

@232BAD1

2400

@232BAD0

1200

Parity Check

Set the parity type to match the host requirements.

Odd Parity: If the data contains an odd number of 1 bits, the parity bit value is set to 0.

Even Parity: If the data contains an even number of 1 bits, the parity bit value is set to 0.

None: Select this option when no parity bit is required.

@232PAR0

**** None**

@232PAR1

Even Parity

@232PAR2

Odd Parity

@SETUPE0

**** Exit Setup**

@SETUPE1

Enter Setup

Data Bit

Set the number of data bits to match the host requirements.

@232DAT1

7 Data Bits

@232DAT0

**** 8 Data Bits**

Stop Bit

The stop bit(s) at the end of each transmitted character marks the end of transmission of one character and prepares the receiving device for the next character in the serial data stream. Set the number of stop bits to match the host requirements.

@232STP0

**** 1 Stop Bit**

@232STP1

2 Stop Bits

@SETUPE0

**** Exit Setup**

@SETUPE1

Enter Setup

Hardware Auto Flow Control

If CTS flow control is enabled, the cradle determines whether to transmit data based on CTS signal level. When CTS signal is at low level which means the serial port's cache memory of receiving device (such as PC) is full, the cradle stops sending data through serial port until CTS signal is set to high level by receiving device. If RTS flow control is enabled, whether the cradle receives data or not is dependent on RTS signal level. If the cradle is not ready for receiving, it will set RTS signal to low level. When sending device (such as PC) detects it, it will not send data to the cradle any more to prevent data loss.

If **No Flow Control** is selected, reception/transmission of serial data will not be influenced by RTS/CTS signal.

@232FLW0

** **No Flow Control**

@232FLW1

RTS Flow Control

@232FLW2

CTS Flow Control

@232FLW3

CTS/RTS Flow Control

Before enabling this feature, make sure that RTS/CTS signal lines are contained in RS-232 cable. Without the signal lines, RS-232 communication errors will occur.

@SETUPE0

**** Exit Setup**

@SETUPE1

Enter Setup

Chapter 6 USB Interface

Introduction

There are four options for USB connection between the cradle and host device:

- ✧ USB HID Keyboard: The cradle's transmission is simulated as USB keyboard input with no need for command configuration or a driver. Barcode data could be entered by the virtual keyboard directly and it is also convenient for the host device to receive data.
- ✧ USB CDC: It is compliant with the standard USB CDC class specifications defined by the USB-IF and allows the host device to receive data in the way as a serial port does. A driver is needed when using this feature.
- ✧ HID POS (POS HID Barcode Scanner): It is based on the HID interface, with no need for a custom driver. It excels virtual keyboard and traditional RS-232 interface in transmission speed.
- ✧ IBM SurePOS: It conforms to IBM (now Toshiba Global Commerce Solutions) 4698 USB scanner interface specifications.

When the cradle is connected to both USB and RS-232 ports on a host device, it will select the USB connection by default.

@SETUPE0

**** Exit Setup**

USB HID Keyboard

When the cradle is connected to the USB port on a host device, you can enable the USB HID Keyboard feature by scanning the barcode below. The cradle's transmission will be simulated as USB keyboard input. The Host receives keystrokes onthe virtual keyboard. It works on a Plug and Play basis and no driver is required.

@INTERF3

**** USB HID Keyboard**

If the host device allows keyboard input, then no extra software is needed for HID Keyboard input.

@SETUPE1
Enter Setup

USB Country Keyboard Types

Keyboard layouts vary from country to country. The default setting is U.S. keyboard.

@KBWCTY0
**** U.S. (English)**

@KBWCTY1
Belgium

@KBWCTY2
Brazil

@KBWCTY3
Canada (French)

@KBWCTY4
Czechoslovakia

@KBWCTY5
Denmark

@KBWCTY6
Finland (Swedish)

@SETUPE0
**** Exit Setup**

@SETUPE1

Enter Setup

@KBWCTY7

France

@KBWCTY8

Germany/ Austria

@KBWCTY9

Greece

@KBWCTY10

Hungary

@KBWCTY11

Israel (Hebrew)

@KBWCTY12

Italy

@KBWCTY13

Latin America/ South America

@KBWCTY14

Netherlands (Dutch)

@SETUPE0

**** Exit Setup**

@SETUPE1

Enter Setup

@KBWCTY15

Norway

@KBWCTY16

Poland

@KBWCTY17

Portugal

@KBWCTY18

Romania

@KBWCTY19

Russia

@KBWCTY21

Slovakia

@KBWCTY22

Spain

@KBWCTY23

Sweden

@SETUPE0

**** Exit Setup**

@SETUPE1

Enter Setup

@KBWCTY24

Switzerland (German)

@KBWCTY25

Turkey_F

@KBWCTY26

Turkey_Q

@KBWCTY27

UK

@KBWCTY28

Japan

@SETUPE0

**** Exit Setup**

Emulate ALT+Keypad

When **Emulate ALT+Keypad** is turned on, any character whose ASCII value is greater than or equal to 0x20 is sent over the numeric keypad no matter which keyboard type is selected.

1. ALT Make
2. Enter the number corresponding to a desired character on the keypad.
3. ALT Break

After **Emulate ALT+Keypad ON** is selected, you need to choose the code page with which the barcodes were created and to turn **Unicode Encoding** On or Off depending on the encoding used by the application software.

@KBWALT0
**** Emulate ALT+Keypad OFF**

@KBWALT1
Emulate ALT+Keypad ON

Since sending a character involves multiple keystroke emulations, this method appears less efficient.

Supposing **Emulate ALT+Keypad** is ON, **Unicode Encoding** is Off, **Code Page 1252 (West European Latin)** is selected, and **Emulate Keypad with Leading Zero** is Off, barcode data ”AÐF” (65/208/70) is sent as below:

“A” – “ALT Make” + “065” + “ALT Break”

“Ð” -- “ALT Make” + “208” + “ALT Break”

“F” -- “ALT Make” + “070” + “ALT Break”

@SETUPE1

Enter Setup

Code Page

Code pages define the mapping of character codes to characters. If the data received does not display with the proper characters, it may be because the barcode being scanned was created using a code page that is different from the one the host program is expecting. If this is the case, select the code page with which the barcodes were created by scanning the appropriate barcode below. For PDF417, QR Code, Aztec and Data Matrix, besides setting the code page, you also need to set the character encoding in the “Character Encoding” section in Chapter 7. This feature is only effective when **Emulate ALT+Keypad** is turned on.

@KBWCPG0

**** Code Page 1252 (West European Latin)**

@KBWCPG1

Code Page 1251 (Cyrillic)

@KBWCPG2

Code Page 1250 (Central and East European Latin)

@KBWCPG3

Code Page 1253 (Greek)

@KBWCPG4

Code Page 1254 (Turkish)

@KBWCPG5

Code Page 1255 (Hebrew)

@SETUPE0

**** Exit Setup**

@SETUPE1

Enter Setup

@KBWCPG6

Code Page 1256 (Arabic)

@KBWCPG7

Code Page 1257 (Baltic)

@KBWCPG8

Code Page 1258 (Vietnamese)

@KBWCPG9

Code Page 936 (Simplified Chinese, GB2312, GBK)

@KBWCPG10

Code Page 950 (Traditional Chinese, Big5)

@KBWCPG11

Code Page 874 (Thai)

@KBWCPG12

Code Page 932 (Japanese, Shift-JIS)

@SETUPE0

**** Exit Setup**

@SETUPE1

Enter Setup

Unicode Encoding

Different host program may use different character encodings for handling incoming barcode data. For instance, Microsoft Office Word uses Unicode encoding and therefore you should turn **Unicode Encoding** on, whereas Microsoft Office Excel or Notepad uses Code Page encoding and therefore you should turn **Unicode Encoding** off. This feature is only effective when **Emulate ALT+Keypad** is turned on.

@KBWCPU0

**** Off**

@KBWCPU1

On

Emulate Keypad with Leading Zero

You may turn this feature on to send character sequences sent over the numeric keypad as ISO characters which have a leading zero. For example, ASCII A transmits as “ALT MAKE” 0065 “ALT BREAK”. This feature is only effective when **Emulate ALT+Keypad** is enabled.

@KBWALZ1

**** On**

@KBWALZ0

Off

@SETUPE0

**** Exit Setup**

Function Key Mapping

When **Ctrl+ASCII Mode** is selected, function characters (0x00 - 0x1F) are sent as ASCII sequences.

@KBWFKM0
**** Disable**

@KBWFKM1
Ctrl+ASCII Mode

@KBWFKM2
Alt+Keypad Mode

Example

If **Ctrl+ASCII Mode** is selected and other parameters of USB HID Keyboard adopt factory defaults, barcode data “A<HT>(i.e. Horizontal Tab)F” (0x41/0x09/0x46) is sent as below:

“A” - Keystroke “A”.

<HT> - “Ctrl Make” + Keystroke “I” + “Ctrl Break”

“F” - Keystroke “F”

For some text editors, “Ctrl I” means italic convert. So the output may be “A*F*”.

If **Alt+Keypad Mode** is selected and other parameters of USB HID Keyboard adopt factory defaults, the data above is sent as below:

“A” - Keystroke “A”.

<HT> - “Alt Make” + Keystrokes “009” + “Alt Break”

“F” - Keystroke “F”

ASCII Function Key Mapping Table

ASCII Function	ASCII Value (HEX)	Function Key Mapping Disabled	Ctrl+ASCII
NUL	00	Null	Ctrl+@
SOH	01	Keypad Enter	Ctrl+A
STX	02	Caps Lock	Ctrl+B
ETX	03	ALT	Ctrl+C
EOT	04	Null	Ctrl+D
ENQ	05	CTRL	Ctrl+E
ACK	06	Null	Ctrl+F
BEL	07	Enter	Ctrl+G
BS	08	Left Arrow	Ctrl+H
HT	09	Horizontal Tab	Ctrl+I
LF	0A	Down Arrow	Ctrl+J
VT	0B	Vertical Tab	Ctrl+K
FF	0C	Delete	Ctrl+L
CR	0D	Enter	Ctrl+M
SO	0E	Insert	Ctrl+N
SI	0F	Esc	Ctrl+O
DLE	10	F11	Ctrl+P
DC1	11	Home	Ctrl+Q
DC2	12	PrintScreen	Ctrl+R
DC3	13	Backspace	Ctrl+S
DC4	14	tab+shift	Ctrl+T
NAK	15	F12	Ctrl+U
SYN	16	F1	Ctrl+V
ETB	17	F2	Ctrl+W
CAN	18	F3	Ctrl+X
EM	19	F4	Ctrl+Y
SUB	1A	F5	Ctrl+Z
ESC	11	F6	Ctrl+[
FS	1C	F7	Ctrl+\
GS	1D	F8	Ctrl+]
RS	1E	F9	Ctrl+6
US	1F	F10	Ctrl+-

ASCII Function Key Mapping Table (Continued)

The last five characters (0x1B~0x1F) in the table above apply to US keyboard layout only. The following chart provides the equivalents of these five characters for other countries.

Country	Ctrl+ASCII					
United States	Ctrl+[	Ctrl+\	Ctrl+]	Ctrl+6	Ctrl+-	
Belgium	Ctrl+[	Ctrl+<	Ctrl+]	Ctrl+6	Ctrl+-	
Scandinavia	Ctrl+8	Ctrl+<	Ctrl+9	Ctrl+6	Ctrl+-	
France	Ctrl+^	Ctrl+8	Ctrl+$	Ctrl+6	Ctrl+=	
Germany		Ctrl+Ã	Ctrl++	Ctrl+6	Ctrl+-	
Italy		Ctrl+\	Ctrl++	Ctrl+6	Ctrl+-	
Switzerland		Ctrl+<	Ctrl+..	Ctrl+6	Ctrl+-	
United Kingdom	Ctrl+[	Ctrl+¢	Ctrl+]	Ctrl+6	Ctrl+-	
Denmark	Ctrl+8	Ctrl+\	Ctrl+9	Ctrl+6	Ctrl+-	
Norway	Ctrl+8	Ctrl+\	Ctrl+9	Ctrl+6	Ctrl+-	
Spain	Ctrl+[	Ctrl+\	Ctrl+]	Ctrl+6	Ctrl+-	

@SETUPE1

Enter Setup

Inter-Keystroke Delay

This parameter specifies the delay between emulated keystrokes.

@KBWDLY0

**** No Delay**

@KBWDLY40

Long Delay (40ms)

@KBWDLY20

Short Delay (20ms)

@SETUPE0

**** Exit Setup**

@SETUPE1

Enter Setup

Convert Case

You may scan the appropriate barcode below to convert all bar code data to your desired case.

@KBWCAS0

**** No Case Conversion**

@KBWCAS1

Convert All to Upper Case

@KBWCAS2

Convert All to Lower Case

When the **Convert All to Lower Case** feature is enabled, barcode data “AbC” is transmitted as “abc”.

If **Emulate ALT+Keypad ON** is selected, **Convert All to Lower Case** and **Convert All to Upper Case** do not function.

@SETUPE0

**** Exit Setup**

@SETUPE1

Enter Setup

Emulate Numeric Keypad

Do Not Emulate Numeric Keypad 1: Sending a number (0-9) is emulated as keystroke(s) on main keyboard.

Emulate Numeric Keypad 1: Sending a number (0-9) is emulated as keystroke(s) on numeric keypad. The state of Num Lock on the simulated numeric keypad is determined by its equivalent on the host device. If Num Lock on the host device is turned off, the output of simulated numeric keypad is function key instead of number.

Do Not Emulate Numeric Keypad 2: Sending "+", "-", "*" and "/" is emulated as keystroke(s) on main keyboard.

Emulate Numeric Keypad 2: Sending "+", "-", "*" and "/" is emulated as keystroke(s) on numeric keypad.

@KBWNUM0

**** Do Not Emulate Numeric Keypad 1**

@KBWNUM1

Emulate Numeric Keypad 1

@SETUPE0

**** Exit Setup**

@SETUPE1

Enter Setup

@KBWNCH0

**** Do Not Emulate Numeric Keypad 2**

@KBWNCH1

Emulate Numeric Keypad 2

Emulate ALT+Keypad ON prevails over **Emulate Numeric Keypad**.

Supposing the **Emulate Numeric Keypad 1** feature is enabled:

if Num Lock on the host device is ON, “A4.5” is transmitted as “A4.5”;

if Num Lock on the host device is OFF, “A4.5” is transmitted as “.A”:

1. “A” is sent on main keyboard;
2. “4” is sent as the function key “Cursor Move to Left”;
3. “.” is sent on main keyboard;
4. “5” is not sent as it does not correspond to any function key.

@SETUPE0

**** Exit Setup**

@SETUPE1

Enter Setup

Polling Rate

This parameter specifies the polling rate for a USB keyboard. If the Host drops characters, change the polling rate to a bigger value.

@KBWPOR0

1ms

@KBWPOR1

2ms

@KBWPOR2

3ms

@KBWPOR3

**** 4ms**

@KBWPOR4

5ms

@KBWPOR5

6ms

@KBWPOR6

7ms

@SETUPE0

**** Exit Setup**

@SETUPE1

Enter Setup

@KBWPOR7

8ms

@KBWPOR8

9ms

@KBWPOR9

10ms

@SETUPE0

**** Exit Setup**

@SETUPE1

Enter Setup

USB CDC

If your cradle is connected to the USB port on a host device, the USB CDC feature allows the host device to receive data in the way as a serial port does. A driver is needed when using this feature. You may download it from our website at www.newlandaidc.com.

@INTERF8

**** USB CDC**

@SETUPE0

**** Exit Setup**

HID POS (POS HID Barcode Scanner)

Introduction

The HID-POS interface is recommended for new application programs. It can send up to 56 characters in a single USB report and appears more efficient than keyboard emulation.

Features:

1. HID based, no custom driver required.
2. Way more efficient in communication than keyboard emulation and traditional RS-232 interface.

@INTERF5
USB HID-POS

Access the Cradle with Your Program

Use CreateFile to access the cradle as a HID device and then use ReadFile to deliver the scanned data to the application program. Use WriteFile to send data to the cradle.

For detailed information about USB and HID interfaces, go to www.USB.org.

Acquire Scanned Data

After a barcode is decoded, the cradle sends an input report as below:

	Bit							
Byte	7	6	5	4	3	2	1	0
0	Report ID = 0x02							
1	Barcode Length							
2-57	Decoded Data (1-56)							
58-61	Reserved							
62	Newland Symbology Identifier or N/C: 0x00							
63	-	-	-	-	-	-	-	Decoded data continued

Send Command to the Cradle

This output report is used to send commands to the cradle. All programming commands can be used.

	Bit							
Byte	7	6	5	4	3	2	1	0
0	Report ID = 0x04							
1	Length of command							
2-63	Command (1-62)							

IBM SurePOS (Tabletop)

@INTERF6
IBM SurePOS (Tabletop)

IBM SurePOS (Handheld)

@INTERF7
IBM SurePOS (Handheld)

VID/PID

USB uses VID (Vendor ID) and PID (Product ID) to identify and locate a device. The VID is assigned by USB Implementers Forum. Newland's vendor ID is 1EAB (Hex). A range of PIDs are used for each Newland product family. Every PID contains a base number and interface type (keyboard, COM port, etc.).

Product	Interface	PID (Hex)	PID (Dec)
CD52	USB HID Keyboard	1403	5123
	USB CDC	1406	5126
	HID POS	1410	5136
	IBM SurePOS (Tabletop)	1420	5152
	IBM SurePOS(Handheld)	1421	5153

@SETUPE1

Enter Setup

Chapter 7 Symbologies

Introduction

Every symbology (barcode type) has its own unique attributes. This chapter provides programming barcodes for configuring the scanner so that it can identify various symbologies. It is recommended to disable those that are rarely used to increase the efficiency of the scanner.

Global Settings

Enable/Disable All Symbologies

If the **Disable All Symbologies** feature is enabled, the scanner will not be able to read any non-programming barcodes except the programming barcodes.

@ALLENA1

Enable All Symbologies

@ALLENA0

Disable All Symbologies

Enable/Disable 1D Symbologies

@ALL1DC1

Enable 1D Symbologies

@ALL1DC0

Disable 1D Symbologies

@SETUPE0

**** Exit Setup**

@SETUPE1

Enter Setup

Enable/Disable 2D Symbologies

@ALL2DC1

Enable 2D Symbologies

@ALL2DC0

Disable 2D Symbologies

Enable/Disable Postal Symbologies

@ALLPST1

Enable All Postal Symbologies

@ALLPST0

Disable All Postal Symbologies

@SETUPE0

**** Exit Setup**

@SETUPE1

Enter Setup

1D Twin Code

1D twin code is two 1D barcodes of a symbology or of different symbologies paralleled vertically. Both barcodes must have similar specifications and be placed closely together.

There are 3 options for reading 1D twin code:

- **Single 1D Code Only:** Read either 1D code.
- **Twin 1D Code Only:** Read both 1D codes. Transmission sequence: upper 1D code followed by lower 1D code.
- **Both Single & Twin:** Read both 1D codes. If successful, transmit as twin 1D code only. Otherwise, try single 1D code only.

@A1DDOU0

**** Single 1D Code Only**

@A1DDOU2

Twin 1D Code Only

@A1DDOU1

Both Single & Twin

@SETUPE0

**** Exit Setup**

@SETUPE1

Enter Setup

Surround GS1 Application Identifiers (AI's) with Parentheses

When **Surround GS1 AI's with Parentheses** is selected, each application identifier (AI) contained in scanned data will be enclosed in parentheses in the output message.

@GS1AIP0

**** Do Not Surround GS1 AI's with Parentheses**

@GS1AIP1

Surround GS1 AI's with Parentheses

Example

(01) 0 0614141 99999 6 (10) 10ABCEDF123456

If **Surround GS1 AI's with Parentheses** is selected, the barcode above is output as (01)00614141999996(10)10ABCEDF123456.

If **Do Not Surround GS1 AI's with Parentheses** is selected, the barcode above is output as 01006141419999961010ABCEDF123456.

@SETUPE0

**** Exit Setup**

@SETUPE1

Enter Setup

Code 128

Restore Factory Defaults

@128DEF

Restore the Factory Defaults of Code 128

Enable/Disable Code 128

@128ENA1

**** Enable Code 128**

@128ENA0

Disable Code 128

If the scanner fails to identify Code 128 barcodes, you may first try this solution by scanning the **Enter Setup** barcode and then **Enable Code 128** barcode.

@SETUPE0

**** Exit Setup**

@SETUPE1

Enter Setup

Set Length Range for Code 128

The scanner can be configured to only decode Code 128 barcodes with lengths that fall between (inclusive) the minimum and maximum lengths. To accomplish it, you need to set the minimum and maximum lengths.

@128MIN

Set the Minimum Length (Default: 1)

@128MAX

Set the Maximum Length (Default: 48)

If minimum length is set to be greater than maximum length, the scanner only decodes Code 128 barcodes with either the minimum or maximum length. If minimum length is same as maximum length, only Code 128 barcodes with that length are to be decoded.

Set the scanner to decode Code 128 barcodes containing between 8 and 12 characters:

1. Scan the **Enter Setup** barcode.
2. Scan the **Set the Minimum Length** barcode.
3. Scan the numeric barcode “8” from the “Digit Barcodes” section in Appendix.
4. Scan the **Save** barcode from the “Save/Cancel Barcodes” section in Appendix.
5. Scan the **Set the Maximum Length** barcode.
6. Scan the numeric barcodes “1” and “2” from the “Digit Barcodes” section in Appendix.
7. Scan the **Save** barcode from the “Save/Cancel Barcodes” section in Appendix.
8. Scan the **Exit Setup** barcode.

@SETUPE0

**** Exit Setup**

@SETUPE1

Enter Setup

EAN-8

Restore Factory Defaults

@EA8DEF

Restore the Factory Defaults of EAN-8

Enable/Disable EAN-8

@EA8ENA1

**** Enable EAN-8**

@EA8ENA0

Disable EAN-8

If the scanner fails to identify EAN-8 barcodes, you may first try this solution by scanning the **Enter Setup** barcode and then **Enable EAN-8** barcode.

Transmit Check Character

EAN-8 is 8 digits in length with the last one as its check character used to verify the integrity of the data.

@EA8CHK2

**** Transmit EAN-8 Check Character**

@EA8CHK1

Do Not Transmit EAN-8 Check Character

@SETUPE0

**** Exit Setup**

@SETUPE1

Enter Setup

2-Digit Add-On Code

An EAN-8 barcode can be augmented with a two-digit add-on code to form a new one. In the example below, the part surrounded by blue dotted line is an EAN-8 barcode while the part circled by red dotted line is a two-digit add-on code.

@EA8AD20

**** Disable 2-Digit Add-On Code**

@EA8AD21

Enable 2-Digit Add-On Code

Disable 2-Digit Add-On Code: The scanner decodes EAN-8 and ignores the add-on code when presented with an EAN-8 plus 2-digit add-on barcode. It can also decode EAN-8 barcodes without 2-digit add-on codes.

Enable 2-Digit Add-On Code: The scanner decodes a mix of EAN-8 barcodes with and without 2-digit add-on codes.

@SETUPE0

**** Exit Setup**

@SETUPE1

Enter Setup

5-Digit Add-On Code

An EAN-8 barcode can be augmented with a five-digit add-on code to form a new one. In the example below, the part surrounded by blue dotted line is an EAN-8 barcode while the part circled by red dotted line is a five-digit add-on code.

@EA8AD50

**** Disable 5-Digit Add-On Code**

@EA8AD51

Enable 5-Digit Add-On Code

Disable 5-Digit Add-On Code: The scanner decodes EAN-8 and ignores the add-on code when presented with an EAN-8 plus 5-digit add-on barcode. It can also decode EAN-8 barcodes without 5-digit add-on codes.

Enable 5-Digit Add-On Code: The scanner decodes a mix of EAN-8 barcodes with and without 5-digit add-on codes.

@SETUPE0

**** Exit Setup**

@SETUPE1

Enter Setup

Convert EAN-8 to EAN-13

Convert EAN-8 to EAN-13: Convert EAN-8 decoded data to EAN-13 format before transmission. After conversion, the data follows EAN-13 format and is affected by EAN-13 programming selections (e.g., Check Character).

Do Not Convert EAN-8 to EAN-13: EAN-8 decoded data is transmitted as EAN-8 data, without conversion.

@EA8EXP0

**** Do Not Convert EAN-8 to EAN-13**

@EA8EXP1

Convert EAN-8 to EAN-13

@SETUPE0

**** Exit Setup**

@SETUPE1

Enter Setup

EAN-13

Restore Factory Defaults

@E13DEF

Restore the Factory Defaults of EAN-13

Enable/Disable EAN-13

@E13ENA1

**** Enable EAN-13**

@E13ENA0

Disable EAN-13

If the scanner fails to identify EAN-13 barcodes, you may first try this solution by scanning the **Enter Setup** barcode and then **Enable EAN-13** barcode.

@SETUPE0

**** Exit Setup**

@SETUPE1

Enter Setup

Transmit Check Character

@E13CHK2

**** Transmit EAN-13 Check Character**

@E13CHK1

Do Not Transmit EAN-13 Check Character

2-Digit Add-On Code

An EAN-13 barcode can be augmented with a two-digit add-on code to form a new one. In the example below, the part surrounded by blue dotted line is an EAN-13 barcode while the part circled by red dotted line is a two-digit add-on code.

@E13AD20

**** Disable 2-Digit Add-On Code**

@E13AD21

Enable 2-Digit Add-On Code

Disable 2-Digit Add-On Code: The scanner decodes EAN-13 and ignores the add-on code when presented with an EAN-13 plus 2-digit add-on barcode. It can also decode EAN-13 barcodes without 2-digit add-on codes.

Enable 2-Digit Add-On Code: The scanner decodes a mix of EAN-13 barcodes with and without 2-digit add-on codes.

@SETUPE0

**** Exit Setup**

@SETUPE1

Enter Setup

5-Digit Add-On Code

An EAN-13 barcode can be augmented with a five-digit add-on code to form a new one. In the example below, the part surrounded by blue dotted line is an EAN-13 barcode while the part circled by red dotted line is a five-digit add-on code.

@E13AD50

**** Disable 5-Digit Add-On Code**

@E13AD51

Enable 5-Digit Add-On Code

Disable 5-Digit Add-On Code: The scanner decodes EAN-13 and ignores the add-on code when presented with an EAN-13 plus 5-digit add-on barcode. It can also decode EAN-13 barcodes without 5-digit add-on codes.

Enable 5-Digit Add-On Code: The scanner decodes a mix of EAN-13 barcodes with and without 5-digit add-on codes.

Add-On Code Required

When **EAN-13 Add-On Code Required** is selected, the scanner will only read EAN-13 barcodes that contain add-on codes.

@E13REQ0

**** EAN-13 Add-On Code Not Required**

@E13REQ1

EAN-13 Add-On Code Required

@SETUPE0

**** Exit Setup**

@SETUPE1

Enter Setup

EAN-13 Beginning with 290 Add-On Code Required

This setting programs the scanner to require an add-on code (2-digit or 5-digit) on EAN-13 barcodes that begin with “290”. The following settings can be programmed:

Require Add-On Code: All EAN-13 barcodes that begin with “290” must have a 2-digit or 5-digit add-on code. The EAN-13 barcode with the add-on code is then transmitted. If the required add-on code is not found, the EAN-13 barcode is discarded.

Do Not Require Add-On Code: If you have selected **Require Add-On Code**, and you want to disable this feature, scan **Do Not Require Add-On Code**. EAN-13 barcodes are handled, depending on your selection for the “Add-On Code Required” feature.

@E132900

**** Do Not Require Add-On Code**

@E132901

Require Add-On Code

EAN-13 Beginning with 378/379 Add-On Code Required

This setting programs the scanner to require an add-on code (2-digit or 5-digit) on EAN-13 barcodes that begin with a “378” or “379”. The following settings can be programmed:

Require Add-On Code: All EAN-13 barcodes that begin with a “378” or “379” must have a 2-digit or 5-digit add-on code. The EAN-13 barcode with the add-on code is then transmitted. If the required add-on code is not found, the EAN-13 barcode is discarded.

Do Not Require Add-On Code: If you have selected **Require Add-On Code**, and you want to disable this feature, scan **Do Not Require Add-On Code**. EAN-13 barcodes are handled, depending on your selection for the “Add-On Code Required” feature.

@E133780

**** Do Not Require Add-On Code**

@E133781

Require Add-On Code

@SETUPE0

**** Exit Setup**

EAN-13 Beginning with 414/419 Add-On Code Required

This setting programs the scanner to require an add-on code (2-digit or 5-digit) on EAN-13 barcodes that begin with a “414” or “419”. The following settings can be programmed:

Require Add-On Code: All EAN-13 barcodes that begin with a “414” or “419” must have a 2-digit or 5-digit add-on code. The EAN-13 barcode with the add-on code is then transmitted. If the required add-on code is not found, the EAN-13 barcode is discarded.

Do Not Require Add-On Code: If you have selected **Require Add-On Code**, and you want to disable this feature, scan **Do Not Require Add-On Code**. EAN-13 barcodes are handled, depending on your selection for the “Add-On Code Required” feature.

@E134140

**** Do Not Require Add-On Code**

@E134141

Require Add-On Code

EAN-13 Beginning with 434/439 Add-On Code Required

This setting programs the scanner to require an add-on code (2-digit or 5-digit) on EAN-13 barcodes that begin with a “434” or “439”. The following settings can be programmed:

Require Add-On Code: All EAN-13 barcodes that begin with a “434” or “439” must have a 2-digit or 5-digit add-on code. The EAN-13 barcode with the add-on code is then transmitted. If the required add-on code is not found, the EAN-13 barcode is discarded.

Do Not Require Add-On Code: If you have selected **Require Add-On Code**, and you want to disable this feature, scan **Do Not Require Add-On Code**. EAN-13 barcodes are handled, depending on your selection for the “Add-On Code Required” feature.

@E134340

**** Do Not Require Add-On Code**

@E134341

Require Add-On Code

EAN-13 Beginning with 977 Add-On Code Required

This setting programs the scanner to require an add-on code (2-digit or 5-digit) on EAN-13 barcodes that begin with “977”. The following settings can be programmed:

Require Add-On Code: All EAN-13 barcodes that begin with “977” must have a 2-digit or 5-digit add-on code. The EAN-13 barcode with the add-on code is then transmitted. If the required add-on code is not found, the EAN-13 barcode is discarded.

Do Not Require Add-On Code: If you have selected **Require Add-On Code**, and you want to disable this feature, scan **Do Not Require Add-On Code**. EAN-13 barcodes are handled, depending on your selection for the “Add-On Code Required” feature.

@E139770

**** Do Not Require Add-On Code**

@E139771

Require Add-On Code

EAN-13 Beginning with 978 Add-On Code Required

This setting programs the scanner to require an add-on code (2-digit or 5-digit) on EAN-13 barcodes that begin with “978”. The following settings can be programmed:

Require Add-On Code: All EAN-13 barcodes that begin with “978” must have a 2-digit or 5-digit add-on code. The EAN-13 barcode with the add-on code is then transmitted. If the required add-on code is not found, the EAN-13 barcode is discarded.

Do Not Require Add-On Code: If you have selected **Require Add-On Code**, and you want to disable this feature, scan **Do Not Require Add-On Code**. EAN-13 barcodes are handled, depending on your selection for the “Add-On Code Required” feature.

@E139780

**** Do Not Require Add-On Code**

@E139781

Require Add-On Code

@SETUPE1

Enter Setup

EAN-13 Beginning with 979 Add-On Code Required

This setting programs the scanner to require an add-on code (2-digit or 5-digit) on EAN-13 barcodes that begin with “979”. The following settings can be programmed:

Require Add-On Code: All EAN-13 barcodes that begin with “979” must have a 2-digit or 5-digit add-on code. The EAN-13 barcode with the add-on code is then transmitted. If the required add-on code is not found, the EAN-13 barcode is discarded.

Do Not Require Add-On Code: If you have selected **Require Add-On Code**, and you want to disable this feature, scan **Do Not Require Add-On Code**. EAN-13 barcodes are handled, depending on your selection for the “Add-On Code Required” feature.

@E139790

**** Do Not Require Add-On Code**

@E139791

Require Add-On Code

@SETUPE0

**** Exit Setup**

@SETUPE1

Enter Setup

UPC-E

Restore Factory Defaults

@UPEDEF

Restore the Factory Defaults of UPC-E

Enable/Disable UPC-E

@UPEENA1

**** Enable UPC-E**

@UPEENA0

Disable UPC-E

If the scanner fails to identify UPC-E barcodes, you may first try this solution by scanning the **Enter Setup** barcode and then **Enable UPC-E** barcode.

Transmit Check Character

UPC-E is 8 digits in length with the last one as its check character used to verify the integrity of the data.

@UPECHK2

**** Transmit UPC-E Check Character**

@UPECHK1

Do Not Transmit UPC-E Check Character

@SETUPE0

**** Exit Setup**

@SETUPE1

Enter Setup

2-Digit Add-On Code

A UPC-E barcode can be augmented with a two-digit add-on code to form a new one. In the example below, the part surrounded by blue dotted line is a UPC-E barcode while the part circled by red dotted line is a two-digit add-on code.

@UPEAD20

**** Disable 2-Digit Add-On Code**

@UPEAD21

Enable 2-Digit Add-On Code

Disable 2-Digit Add-On Code: The scanner decodes UPC-E and ignores the add-on code when presented with a UPC-E plus 2-digit add-on barcode. It can also decode UPC-E barcodes without 2-digit add-on codes.

Enable 2-Digit Add-On Code: The scanner decodes a mix of UPC-E barcodes with and without 2-digit add-on codes.

@SETUPE0

**** Exit Setup**

5-Digit Add-On Code

A UPC-E barcode can be augmented with a five-digit add-on code to form a new one. In the example below, the part surrounded by blue dotted line is a UPC-E barcode while the part circled by red dotted line is a five-digit add-on code.

@UPEAD50
**** Disable 5-Digit Add-On Code**

@UPEAD51
Enable 5-Digit Add-On Code

Disable 5-Digit Add-On Code: The scanner decodes UPC-E and ignores the add-on code when presented with a UPC-E plus 5-digit add-on barcode. It can also decode UPC-E barcodes without 5-digit add-on codes.

Enable 5-Digit Add-On Code: The scanner decodes a mix of UPC-E barcodes with and without 5-digit add-on codes.

@SETUPE1

Enter Setup

Transmit Preamble Character

Preamble characters (Country Code and System Character) can be transmitted as part of a UPC-E barcode. Select one of the following options for transmitting UPC-E preamble to the host device: transmit system character only, transmit system character and country code ("0" for USA), or transmit no preamble.

@UPEPRE1

**** System Character**

@UPEPRE0

No Preamble

@UPEPRE2

System Character & Country Code

Convert UPC-E to UPC-A

Convert UPC-E to UPC-A: Convert UPC-E (zero suppressed) decoded data to UPC-A format before transmission. After conversion, the data follows UPC-A format and is affected by UPC-A programming selections (e.g., Preamble, Check Character).

Do Not Convert UPC-E to UPC-A: UPC-E decoded data is transmitted as UPC-E data, without conversion.

@UPEEXP0

**** Do Not Convert UPC-E to UPC-A**

@UPEEXP1

Convert UPC-E to UPC-A

@SETUPE0

**** Exit Setup**

@SETUPE1

Enter Setup

UPC-A

Restore Factory Defaults

@UPADEF

Restore the Factory Defaults of UPC-A

Enable/Disable UPC-A

@UPAENA1

**** Enable UPC-A**

@UPAENA0

Disable UPC-A

If the scanner fails to identify UPC-A barcodes, you may first try this solution by scanning the **Enter Setup** barcode and then **Enable UPC-A** barcode.

Transmit Check Character

UPC-A is 13 digits in length with the last one as its check character used to verify the integrity of the data.

@UPACHK2

**** Transmit UPC-A Check Character**

@UPACHK1

Do Not Transmit UPC-A Check Character

@SETUPE0

**** Exit Setup**

@SETUPE1

Enter Setup

2-Digit Add-On Code

A UPC-A barcode can be augmented with a two-digit add-on code to form a new one. In the example below, the part surrounded by blue dotted line is a UPC-A barcode while the part circled by red dotted line is a two-digit add-on code.

@UPAAD20

**** Disable 2-Digit Add-On Code**

@UPAAD21

Enable 2-Digit Add-On Code

Disable 2-Digit Add-On Code: The scanner decodes UPC-A and ignores the add-on code when presented with a UPC-A plus 2-digit add-on barcode. It can also decode UPC-A barcodes without 2-digit add-on codes.

Enable 2-Digit Add-On Code: The scanner decodes a mix of UPC-A barcodes with and without 2-digit add-on codes.

@SETUPE0

**** Exit Setup**

@SETUPE1

Enter Setup

5-Digit Add-On Code

A UPC-A barcode can be augmented with a five-digit add-on code to form a new one. In the example below, the part surrounded by blue dotted line is a UPC-A barcode while the part circled by red dotted line is a five-digit add-on code.

@UPAAD50

**** Disable 5-Digit Add-On Code**

@UPAAD51

Enable 5-Digit Add-On Code

Disable 5-Digit Add-On Code: The scanner decodes UPC-A and ignores the add-on code when presented with a UPC-A plus 5-digit add-on barcode. It can also decode UPC-A barcodes without 5-digit add-on codes.

Enable 5-Digit Add-On Code: The scanner decodes a mix of UPC-A barcodes with and without 5-digit add-on codes.

@SETUPE0

**** Exit Setup**

@SETUPE1

Enter Setup

Transmit Preamble Character

Preamble characters (Country Code and System Character) can be transmitted as part of a UPC-A barcode. Select one of the following options for transmitting UPC-A preamble to the host device: transmit system character only, transmit system character and country code (“0” for USA), or transmit no preamble.

@UPAPRE0

**** No Preamble**

@UPAPRE1

System Character

@UPAPRE2

System Character & Country Code

@SETUPE0

**** Exit Setup**

@SETUPE1

Enter Setup

Coupon

UPC-A/EAN-13 with Extended Coupon Code

The following three types of coupon code + extended coupon code are supported:

- ✧ UPC-A (starting with “5”) + GS1-128
- ✧ UPC-A (starting with “5”) + GS1 Databar
- ✧ EAN-13 (starting with “99”) + GS1-128

Use the appropriate barcode below to enable or disable UPC-A/EAN-13 with Extended Coupon Code. When left on the default setting (**Off**), the scanner treats Coupon Codes and Extended Coupon Codes as single bar codes.

If you scan the **Allow Concatenation** code, when the scanner sees the coupon code and the extended coupon code in a single scan, it transmits both as separate symbologies. Otherwise, it transmits the first coupon code it reads.

If you scan the **Require Concatenation** code, the scanner must see and read the coupon code and extended coupon code in a single read to transmit the data. No data is output unless both codes are read.

@CPNENA0

**** Off**

@CPNENA1

Allow Concatenation

@CPNENA2

Require Concatenation

When using the UPC-A Coupon feature, please ensure that **System Character** or **System Character & Country Code** is selected for the “Transmit UPC-A Preamble Character” feature.

@SETUPE0

**** Exit Setup**

Coupon GS1 Databar Output

If you scan coupons that have both UPC and GS1 Databar codes, you may wish to scan and output only the data from the GS1 Databar code. Scan the **GS1 Output On** barcode below to scan and output only the GS1 Databar code data.

When **GS1 Output Off** is selected, coupons that have both UPC and GS1 Databar codes are transmitted depending on your selection for the “UPC-A/EAN-13 with Extended Coupon Code” feature.

@CPNGS10
**** GS1 Output Off**

@CPNGS11
GS1 Output On

When using the UPC-A Coupon feature, please ensure that **System Character** or **System Character & Country Code** is selected for the “Transmit UPC-A Preamble Character” feature.

@SETUPE1

Enter Setup

Interleaved 2 of 5

Restore Factory Defaults

@I25DEF

Restore the Factory Defaults of Interleaved 2 of 5

Enable/Disable Interleaved 2 of 5

@I25ENA1

**** Enable Interleaved 2 of 5**

@I25ENA0

Disable Interleaved 2 of 5

If the scanner fails to identify Interleaved 2 of 5 barcodes, you may first try this solution by scanning the **Enter Setup** barcode and then **Enable Interleaved 2 of 5** barcode.

@SETUPE0

**** Exit Setup**

@SETUPE1

Enter Setup

Set Length Range for Interleaved 2 of 5

The scanner can be configured to only decode Interleaved 2 of 5 barcodes with lengths that fall between (inclusive) the minimum and maximum lengths. To accomplish it, you need to set the minimum and maximum lengths.

@I25MIN

Set the Minimum Length (Default: 6)

@I25MAX

Set the Maximum Length (Default: 80)

If minimum length is set to be greater than maximum length, the scanner only decodes Interleaved 2 of 5 barcodes with either the minimum or maximum length. If minimum length is same as maximum length, only Interleaved 2 of 5 barcodes with that length are to be decoded.

Set the scanner to decode Interleaved 2 of 5 barcodes containing between 8 and 12 characters:

1. Scan the **Enter Setup** barcode.
2. Scan the **Set the Minimum Length** barcode.
3. Scan the numeric barcode “8” from the “Digit Barcodes” section in Appendix.
4. Scan the **Save** barcode from the “Save/Cancel Barcodes” section in Appendix.
5. Scan the **Set the Maximum Length** barcode.
6. Scan the numeric barcodes “1” and “2” from the “Digit Barcodes” section in Appendix.
7. Scan the **Save** barcode from the “Save/Cancel Barcodes” section in Appendix.
8. Scan the **Exit Setup** barcode.

@SETUPE0

**** Exit Setup**

Check Character Verification

A check character is optional for Interleaved 2 of 5 and can be added as the last character. It is a calculated value used to verify the integrity of the data.

- ✧ **Disable:** The scanner transmits Interleaved 2 of 5 barcodes as is.
- ✧ **Do Not Transmit Check Character After Verification:** The scanner checks the integrity of all Interleaved 2 of 5 barcodes to verify that the data complies with the check character algorithm. Barcodes passing the check will be transmitted except the last digit, whereas those failing it will not be transmitted.
- ✧ **Transmit Check Character After Verification:** The scanner checks the integrity of all Interleaved 2 of 5 barcodes to verify that the data complies with the check character algorithm. Barcodes passing the check will be transmitted, whereas those failing it will not be transmitted.

Since Interleaved 2 of 5 must always have an even number of digits, a zero may need to be added as the first digit when the check character is added. The check character is automatically generated when making Interleaved 2 of 5 barcodes.

@I25CHK0
**** Disable**

@I25CHK1
Do Not Transmit Check Character After Verification

@I25CHK2
Transmit Check Character After Verification

If the **Do Not Transmit Check Character After Verification** option is enabled, Interleaved 2 of 5 barcodes with a length that is less than the configured minimum length after having the check character excluded will not be decoded. (For example, when the **Do Not Transmit Check Character After Verification**option is enabled and the minimum length is set to 4, Interleaved 2 of 5 barcodes with a total length of 4 characters including the check character cannot be read.)

@SETUPE1

Enter Setup

Febraban

Disable/Enable Febraban

@I25FBB0

**** Disable Febraban**

@I25FBB1

Enable Febraban, Do Not Expand

@I25FBB2

Enable Febraban, Expand

Transmit Delay per Character

Transmit Delay per Character applies to both Expanded and Unexpanded Febraban. This feature is available only when USB HID Keyboard is enabled.

@FEBSEN0

**** Disable Transmit Delay per Character**

@FEBSEN1

Enable Transmit Delay per Character

@SETUPE0

**** Exit Setup**

@SETUPE1

Enter Setup

You may select an appropriate delay value from the options below as per your actual needs.

@FEBSDT0

0ms

@FEBSDT5

5ms

@FEBSDT10

10ms

@FEBSDT15

15ms

@FEBSDT20

20ms

@FEBSDT25

25ms

@FEBSDT30

30ms

@FEBSDT35

35ms

@SETUPE0

**** Exit Setup**

@SETUPE1

Enter Setup

@FEBSDT40

40ms

@FEBSDT45

45ms

@FEBSDT50

50ms

@FEBSDT55

55ms

@FEBSDT60

60ms

@FEBSDT65

65ms

@FEBSDT70

**** 70ms**

@FEBSDT75

75ms

@SETUPE0

**** Exit Setup**

@SETUPE1

Enter Setup

Transmit Delay per 12 Characters

Transmit Delay per 12 Characters applies to Expanded Febraban only. This feature is available only when USB HID Keyboard is enabled.

@FEBMEN0

**** Disable Transmit Delay per 12 Characters**

@FEBMEN1

Enable Transmit Delay per 12 Characters

You may select an appropriate delay value from the options below as per your actual needs.

@FEBMDT0

0ms

@FEBMDT1

300ms

@FEBMDT2

400ms

@SETUPE0

**** Exit Setup**

@SETUPE1

Enter Setup

@FEBMDT3

**** 500ms**

@FEBMDT4

600ms

@FEBMDT5

700ms

@FEBMDT6

800ms

@FEBMDT7

900ms

@SETUPE0

**** Exit Setup**

@SETUPE1

Enter Setup

ITF-14

ITF-14 is a special kind of Interleaved 2 of 5 with a length of 14 characters and the last character as the check character.

ITF-14 priority principle: Forthe Interleaved 2 of 5 barcodes with a length of 14 characters and the last character as the check character, the ITF-14 configurations shall take precedence over the Interleaved 2 of 5 settings.

Restore Factory Defaults

@I14DEF

Restore the Factory Defaults of ITF-14

Enable/Disable ITF-14

@I14ENA0

**** Disable ITF-14**

@I14ENA1

Enable ITF-14 But Do Not Transmit Check Character

@I14ENA2

Enable ITF-14 and Transmit Check Character

An example of the ITF-14 priority principle: when ITF-14 is enabled and Interleaved 2 of 5 is disabled, the scanner only decodes Interleaved 2 of 5 barcodes with a length of 14 characters and the last character as the check character.

@SETUPE0

**** Exit Setup**

@SETUPE1

Enter Setup

ITF-6

ITF-6 is a special kind of Interleaved 2 of 5 with a length of 6 characters and the last character as the check character.

ITF-6 priority principle: For the Interleaved 2 of 5 barcodes with a length of 6 characters and the last character as the check character, the ITF-6 configurations shall take precedence over the Interleaved 2 of 5 settings.

Restore Factory Defaults

@IT6DEF

Restore the Factory Defaults of ITF-6

Enable/Disable ITF-6

@IT6ENA0

**** Disable ITF-6**

@IT6ENA1

Enable ITF-6 But Do Not Transmit Check Character

@IT6ENA2

Enable ITF-6 and Transmit Check Character

An example of the ITF-6 priority principle: when ITF-6 is enabled and Interleaved 2 of 5 is disabled, the scanner only decodes Interleaved 2 of 5 barcodes with a length of 6 characters and the last character as the check character.

@SETUPE0

**** Exit Setup**

@SETUPE1

Enter Setup

Matrix 2 of 5

Restore Factory Defaults

@M25DEF

Restore the Factory Defaults of Matrix 2 of 5

Enable/Disable Matrix 2 of 5

@M25ENA1

**** Enable Matrix 2 of 5**

@M25ENA0

Disable Matrix 2 of 5

If the scanner fails to identify Matrix 2 of 5 barcodes, you may first try this solution by scanning the **Enter Setup** barcode and then **Enable Matrix 2 of 5** barcode.

@SETUPE0

**** Exit Setup**

@SETUPE1

Enter Setup

Set Length Range for Matrix 2 of 5

The scanner can be configured to only decode Matrix 2 of 5 barcodes with lengths that fall between (inclusive) the minimum and maximum lengths. To accomplish it, you need to set the minimum and maximum lengths.

@M25MIN

Set the Minimum Length (Default: 4)

@M25MAX

Set the Maximum Length (Default: 80)

If minimum length is set to be greater than maximum length, the scanner only decodes Matrix 2 of 5 barcodes with either the minimum or maximum length. If minimum length is same as maximum length, only Matrix 2 of 5 barcodes with that length are to be decoded.

Set the scanner to decode Matrix 2 of 5 barcodes containing between 8 and 12 characters:

1. Scan the **Enter Setup** barcode.
2. Scan the **Set the Minimum Length** barcode.
3. Scan the numeric barcode “8” from the “Digit Barcodes” section in Appendix.
4. Scan the **Save** barcode from the “Save/Cancel Barcodes” section in Appendix.
5. Scan the **Set the Maximum Length** barcode.
6. Scan the numeric barcodes “1” and “2” from the “Digit Barcodes” section in Appendix.
7. Scan the **Save** barcode from the “Save/Cancel Barcodes” section in Appendix.
8. Scan the **Exit Setup** barcode.

@SETUPE0

**** Exit Setup**

@SETUPE1

Enter Setup

Check Character Verification

A check character is optional for Matrix 2 of 5 and can be added as the last character. It is a calculated value used to verify the integrity of the data.

- ✧ **Disable:** The scanner transmits Matrix 2 of 5 barcodes as is.
- ✧ **Do Not Transmit Check Character After Verification:** The scanner checks the integrity of all Matrix 2 of 5 barcodes to verify that the data complies with the check character algorithm. Barcodes passing the check will be transmitted except the last digit, whereas those failing it will not be transmitted.
- ✧ **Transmit Check Character After Verification:** The scanner checks the integrity of all Matrix 2 of 5 barcodes to verify that the data complies with the check character algorithm. Barcodes passing the check will be transmitted, whereas those failing it will not be transmitted.

Since Matrix 2 of 5 must always have an even number of digits, a zero may need to be added as the first digit when the check character is added. The check character is automatically generated when making Matrix 2 of 5 barcodes.

@M25CHK0

**** Disable**

@M25CHK1

Do Not Transmit Check Character After Verification

@M25CHK2

Transmit Check Character After Verification

If the **Do Not Transmit Check Character After Verification** option is enabled, Matrix 2 of 5 barcodes with a length that is less than the configured minimum length after having the check character excluded will not be decoded. (For example, when the **Do Not Transmit Check Character After Verification** option is enabled and the minimum length is set to 4, Matrix 2 of 5 barcodes with a total length of 4 characters including the check character cannot be read.)

@SETUPE0

**** Exit Setup**

@SETUPE1

Enter Setup

Code 39

Restore Factory Defaults

@C39DEF

Restore the Factory Defaults of Code 39

Enable/Disable Code 39

@C39ENA1

**** Enable Code 39**

@C39ENA0

Disable Code 39

If the scanner fails to identify Code 39 barcodes, you may first try this solution by scanning the **Enter Setup** barcode and then **Enable Code 39** barcode.

@SETUPE0

**** Exit Setup**

Set Length Range for Code 39

The scanner can be configured to only decode Code 39 barcodes with lengths that fall between (inclusive) the minimum and maximum lengths. To accomplish it, you need to set the minimum and maximum lengths.

@C39MIN

Set the Minimum Length (Default: 1)

@C39MAX

Set the Maximum Length (Default: 48)

If minimum length is set to be greater than maximum length, the scanner only decodes Code 39 barcodes with either the minimum or maximum length. If minimum length is same as maximum length, only Code 39 barcodes with that length are to be decoded.

Set the scanner to decode Code 39 barcodes containing between 8 and 12 characters:

1. Scan the **Enter Setup** barcode.
2. Scan the **Set the Minimum Length** barcode.
3. Scan the numeric barcode “8” from the “Digit Barcodes” section in Appendix.
4. Scan the **Save** barcode from the “Save/Cancel Barcodes” section in Appendix.
5. Scan the **Set the Maximum Length** barcode.
6. Scan the numeric barcodes “1” and “2” from the “Digit Barcodes” section in Appendix.
7. Scan the **Save** barcode from the “Save/Cancel Barcodes” section in Appendix.
8. Scan the **Exit Setup** barcode.

@SETUPE1

Enter Setup

Check Character Verification

A check character is optional for Code 39 and can be added as the last character. It is a calculated value used to verify the integrity of the data.

- **Disable:** The scanner transmits Code 39 barcodes as is.
- **Do Not Transmit Check Character After Verification:** The scanner checks the integrity of all Code 39 barcodes to verify that the data complies with the check character algorithm. Barcodes passing the check will be transmitted except the last digit, whereas those failing it will not be transmitted.
- **Transmit Check Character After Verification:** The scanner checks the integrity of all Code 39 barcodes to verify that the data complies with the check character algorithm. Barcodes passing the check will be transmitted, whereas those failing it will not be transmitted.

@C39CHK0

**** Disable**

@C39CHK1

Do Not Transmit Check Character After Verification

@C39CHK2

Transmit Check Character After Verification

If the **Do Not Transmit Check Character After Verification** option is enabled, Code 39 barcodes with a length that is less than the configured minimum length after having the check character excluded will not be decoded. (For example, when the **Do Not Transmit Check Character After Verification** option is enabled and the minimum length is set to 4, Code 39 barcodes with a total length of 4 characters including the check character cannot be read.)

@SETUPE0

**** Exit Setup**

@SETUPE1

Enter Setup

Transmit Start/Stop Character

Code 39 uses an asterisk (*) for both the start and the stop characters. You can choose whether or not to transmit the start/stop characters by scanning the appropriate barcode below.

@C39TSC0

**** Do Not Transmit Start/Stop Character**

@C39TSC1

Transmit Start/Stop Character

Enable/Disable Code 39 Full ASCII

The scanner can be configured to identify all ASCII characters by scanning the appropriate barcode below.

@C39ASC0

**** Disable Code 39 Full ASCII**

@C39ASC1

Enable Code 39 Full ASCII

@SETUPE0

**** Exit Setup**

@SETUPE1

Enter Setup

Enable/Disable Code 32 (Italian Pharma Code)

Code 32 is a variant of Code 39 used by the Italian pharmaceutical industry. Scan the appropriate bar code below to enable or disable Code 32. Code 39 must be enabled and Code 39 check character verification must be disabled for this parameter to function.

@C39E320

**** Disable Code 32**

@C39E321

Enable Code 32

Code 32 Prefix

You may scan the appropriate barcode below to enable or disable adding the prefix character “A” to all Code 32 barcodes. Code 32 must be enabled for this parameter to function.

@C39S320

**** Disable Code 32 Prefix**

@C39S321

Enable Code 32 Prefix

@SETUPE0

**** Exit Setup**

@SETUPE1

Enter Setup

Transmit Code 32 Start/Stop Character

Code 32 must be enabled for this parameter to function.

@C39T320

**** Do Not Transmit Code 32 Start/Stop Character**

@C39T321

Transmit Code 32 Start/Stop Character

Transmit Code 32 Check Character

Code 32 must be enabled for this parameter to function.

@C39C320

**** Do Not Transmit Code 32 Check Character**

@C39C321

Transmit Code 32 Check Character

@SETUPE0

**** Exit Setup**

@SETUPE1

Enter Setup

Codabar

Restore Factory Defaults

@CBADEF

Restore the Factory Defaults of Codabar

Enable/Disable Codabar

@CBAENA1

**** Enable Codabar**

@CBAENA0

Disable Codabar

If the scanner fails to identify Codabar barcodes, you may first try this solution by scanning the **Enter Setup** barcode and then **Enable Codabar** barcode.

@SETUPE0

**** Exit Setup**

@SETUPE1

Enter Setup

Set Length Range for Codabar

The scanner can be configured to only decode Codabar barcodes with lengths that fall between (inclusive) the minimum and maximum lengths. To accomplish it, you need to set the minimum and maximum lengths.

@CBAMIN

Set the Minimum Length (Default: 2)

@CBAMAX

Set the Maximum Length (Default: 60)

If minimum length is set to be greater than maximum length, the scanner only decodes Codabar barcodes with either the minimum or maximum length. If minimum length is same as maximum length, only Codabar barcodes with that length are to be decoded.

Set the scanner to decode Codabar barcodes containing between 8 and 12 characters:

1. Scan the **Enter Setup** barcode.
2. Scan the **Set the Minimum Length** barcode.
3. Scan the numeric barcode “8” from the “Digit Barcodes” section in Appendix.
4. Scan the **Save** barcode from the “Save/Cancel Barcodes” section in Appendix.
5. Scan the **Set the Maximum Length** barcode.
6. Scan the numeric barcodes “1” and “2” from the “Digit Barcodes” section in Appendix.
7. Scan the **Save** barcode from the “Save/Cancel Barcodes” section in Appendix.
8. Scan the **Exit Setup** barcode.

@SETUPE0

**** Exit Setup**

@SETUPE1

Enter Setup

Check Character Verification

A check character is optional for Codabar and can be added as the last character. It is a calculated value used to verify the integrity of the data.

- **Disable:** The scanner transmits Codabar barcodes as is.
- **Do Not Transmit Check Character After Verification:** The scanner checks the integrity of all Codabar barcodes to verify that the data complies with the check character algorithm. Barcodes passing the check will be transmitted except the last digit, whereas those failing it will not be transmitted.
- **Transmit Check Character After Verification:** The scanner checks the integrity of all Codabar barcodes to verify that the data complies with the check character algorithm. Barcodes passing the check will be transmitted, whereas those failing it will not be transmitted.

@CBACHK0

**** Disable**

@CBACHK1

Do Not Transmit Check Character After Verification

@CBACHK2

Transmit Check Character After Verification

If the **Do Not Transmit Check Character After Verification** option is enabled, Codabar barcodes with a length that is less than the configured minimum length after having the check character excluded will not be decoded. (For example, when the **Do Not Transmit Check Character After Verification** option is enabled and the minimum length is set to 4, Codabar barcodes with a total length of 4 characters including the check character cannot be read.)

@SETUPE0

**** Exit Setup**

@SETUPE1

Enter Setup

Start/Stop Character

You can set the start/stop characters and choose whether or not to transmit the start/stop characters by scanning the appropriate barcode below.

@CBATSC0

**** Do Not Transmit Start/Stop Character**

@CBATSC1

Transmit Start/Stop Character

@CBASCF0

**** ABCD/ABCD as the Start/Stop Character**

@CBASCF1

ABCD/TN*E as the Start/Stop Character

@CBASCF2

abcd/abcd as the Start/Stop Character

@CBASCF3

abcd/tn*e as the Start/Stop Character

@SETUPE0

**** Exit Setup**

@SETUPE1

Enter Setup

Code 93

Restore Factory Defaults

@C93DEF

Restore the Factory Defaults of Code 93

Enable/Disable Code 93

@C93ENA1

Enable Code 93

@C93ENA0

**** Disable Code 93**

If the scanner fails to identify Code 93 barcodes, you may first try this solution by scanning the **Enter Setup** barcode and then **Enable Code 93** barcode.

@SETUPE0

**** Exit Setup**

@SETUPE1

Enter Setup

Set Length Range for Code 93

The scanner can be configured to only decode Code 93 barcodes with lengths that fall between (inclusive) the minimum and maximum lengths. To accomplish it, you need to set the minimum and maximum lengths.

@C93MIN

Set the Minimum Length (Default: 1)

@C93MAX

Set the Maximum Length (Default: 48)

If minimum length is set to be greater than maximum length, the scanner only decodes Code 93 barcodes with either the minimum or maximum length. If minimum length is same as maximum length, only Code 93 barcodes with that length are to be decoded.

Set the scanner to decode Code 93 barcodes containing between 8 and 12 characters:

1. Scan the **Enter Setup** barcode.
2. Scan the **Set the Minimum Length** barcode.
3. Scan the numeric barcode “8” from the “Digit Barcodes” section in Appendix.
4. Scan the **Save** barcode from the “Save/Cancel Barcodes” section in Appendix.
5. Scan the **Set the Maximum Length** barcode.
6. Scan the numeric barcodes “1” and “2” from the “Digit Barcodes” section in Appendix.
7. Scan the **Save** barcode from the “Save/Cancel Barcodes” section in Appendix.
8. Scan the **Exit Setup** barcode.

@SETUPE0

**** Exit Setup**

@SETUPE1

Enter Setup

Check Character Verification

Check characters are optional for Code 93 and can be added as the last two characters, which are calculated values used to verify the integrity of the data.

- **Disable:** The scanner transmits Code 93 barcodes as is.
- **Do Not Transmit Check Character After Verification:** The scanner checks the integrity of all Code 93 barcodes to verify that the data complies with the check character algorithm. Barcodes passing the checks will be transmitted except the last two digits, whereas those failing them will not be transmitted.
- **Transmit Check Character After Verification:** The scanner checks the integrity of all Code 93 barcodes to verify that the data complies with the check character algorithm. Barcodes passing the checks will be transmitted, whereas those failing them will not be transmitted.

@C93CHK0

Disable

@C93CHK1

**** Do Not Transmit Check Character After Verification**

@C93CHK2

Transmit Check Character After Verification

If the **Do Not Transmit Check Character After Verification** option is enabled, Code 93 barcodes with a length that is less than the configured minimum length after having the two check characters excluded will not be decoded. (For example, when the **Do Not Transmit Check Character After Verification** option is enabled and the minimum length is set to 4, Code 93 barcodes with a total length of 4 characters including the two check characters cannot be read.)

@SETUPE0

**** Exit Setup**

@SETUPE1

Enter Setup

China Post 25

Restore Factory Defaults

@CHPDEF

Restore the Factory Defaults of China Post 25

Enable/Disable China Post 25

@CHPENA1

Enable China Post 25

@CHPENA0

**** Disable China Post 25**

If the scanner fails to identify China Post 25 barcodes, you may first try this solution by scanning the **Enter Setup** barcode and then **Enable China Post 25** barcode.

@SETUPE0

**** Exit Setup**

Set Length Range for China Post 25

The scanner can be configured to only decode China Post 25 barcodes with lengths that fall between (inclusive) the minimum and maximum lengths. To accomplish it, you need to set the minimum and maximum lengths.

@CHPMIN

Set the Minimum Length (Default: 1)

@CHPMAX

Set the Maximum Length (Default: 48)

If minimum length is set to be greater than maximum length, the scanner only decodes China Post 25 barcodes with either the minimum or maximum length. If minimum length is same as maximum length, only China Post 25 barcodes with that length are to be decoded.

Set the scanner to decode China Post 25 barcodes containing between 8 and 12 characters:

1. Scan the **Enter Setup** barcode.
2. Scan the **Set the Minimum Length** barcode.
3. Scan the numeric barcode “8” from the “Digit Barcodes” section in Appendix.
4. Scan the **Save** barcode from the “Save/Cancel Barcodes” section in Appendix.
5. Scan the **Set the Maximum Length** barcode.
6. Scan the numeric barcodes “1” and “2” from the “Digit Barcodes” section in Appendix.
7. Scan the **Save** barcode from the “Save/Cancel Barcodes” section in Appendix.
8. Scan the **Exit Setup** barcode.

@SETUPE1

Enter Setup

Check Character Verification

A check character is optional for China Post 25 and can be added as the last character. It is a calculated value used to verify the integrity of the data.

- **Disable:** The scanner transmits China Post 25 barcodes as is.
- **Do Not Transmit Check Character After Verification:** The scanner checks the integrity of all China Post 25 barcodes to verify that the data complies with the check character algorithm. Barcodes passing the check will be transmitted except the last digit, whereas those failing it will not be transmitted.
- **Transmit Check Character After Verification:** The scanner checks the integrity of all China Post 25 barcodes to verify that the data complies with the check character algorithm. Barcodes passing the check will be transmitted, whereas those failing it will not be transmitted.

@CHPCHK0

**** Disable**

@CHPCHK1

Do Not Transmit Check Character After Verification

@CHPCHK2

Transmit Check Character After Verification

If the **Do Not Transmit Check Character After Verification** option is enabled, China Post 25 barcodes with a length that is less than the configured minimum length after having the check character excluded will not be decoded. (For example, when the **Do Not Transmit Check Character After Verification** option is enabled and the minimum length is set to 4, China Post 25 barcodes with a total length of 4 characters including the check character cannot be read.)

@SETUPE0

**** Exit Setup**

@SETUPE1

Enter Setup

GS1-128 (UCC/EAN-128)

Restore Factory Defaults

@GS1DEF

Restore the Factory Defaults of GS1-128

Enable/Disable GS1-128

@GS1ENA1

**** Enable GS1-128**

@GS1ENA0

Disable GS1-128

If the scanner fails to identify GS1-128 barcodes, you may first try this solution by scanning the **EnterSetup** barcode and then **Enable GS1-128** barcode.

@SETUPE0

**** Exit Setup**

Set Length Range for GS1-128

The scanner can be configured to only decode GS1-128 barcodes with lengths that fall between (inclusive) the minimum and maximum lengths. To accomplish it, you need to set the minimum and maximum lengths.

@GS1MIN
Set the Minimum Length (Default: 1)

@GS1MAX
Set the Maximum Length (Default: 48)

If minimum length is set to be greater than maximum length, the scanner only decodes GS1-128 barcodes with either the minimum or maximum length. If minimum length is same as maximum length, only GS1-128 barcodes with that length are to be decoded.

Set the scanner to decode GS1-128 barcodes containing between 8 and 12 characters:

1. Scan the **Enter Setup** barcode.
2. Scan the **Set the Minimum Length** barcode.
3. Scan the numeric barcode “8” from the “Digit Barcodes” section in Appendix.
4. Scan the **Save** barcode from the “Save/Cancel Barcodes” section in Appendix.
5. Scan the **Set the Maximum Length** barcode.
6. Scan the numeric barcodes “1” and “2” from the “Digit Barcodes” section in Appendix.
7. Scan the **Save** barcode from the “Save/Cancel Barcodes” section in Appendix.
8. Scan the **Exit Setup** barcode.

@SETUPE1

Enter Setup

GS1 Databar (RSS)

Restore Factory Defaults

@RSSDEF

Restore the Factory Defaults of GS1 Databar

Enable/Disable GS1 Databar

@RSSENA1

**** Enable GS1 Databar**

@RSSENA0

Disable GS1 Databar

If the scanner fails to identify GS1 Databar barcodes, you may first try this solution by scanning the **Enter Setup** barcode and then **Enable GS1 Databar** barcode.

Transmit Application Identifier “01”

@RSSTAI1

**** Transmit Application Identifier “01”**

@RSSTAI0

Do Not Transmit Application Identifier “01”

@SETUPE0

**** Exit Setup**

@SETUPE1

Enter Setup

GS1 Composite (EAN·UCC Composite)

Restore Factory Defaults

@CPTDEF

Restore the Factory Defaults of GS1 Composite

Enable/Disable GS1 Composite

@CPTENA1

Enable GS1 Composite

@CPTENA0

**** Disable GS1 Composite**

If the scanner fails to identify GS1 Composite barcodes, you may first try this solution by scanning the **Enter Setup** barcode and then **Enable GS1 Composite** barcode.

Enable/Disable UPC/EAN Composite

@CPTUPC1

Enable UPC/EAN Composite

@CPTUPC0

**** Disable UPC/EAN Composite**

@SETUPE0

**** Exit Setup**

@SETUPE1

Enter Setup

Code 11

Restore Factory Defaults

@C11DEF

Restore the Factory Defaults of Code 11

Enable/Disable Code 11

@C11ENA1

Enable Code 11

@C11ENA0

**** Disable Code 11**

If the scanner fails to identify Code 11 barcodes, you may first try this solution by scanning the **Enter Setup** barcode and then **Enable Code 11** barcode.

@SETUPE0

**** Exit Setup**

Set Length Range for Code 11

The scanner can be configured to only decode Code 11 barcodes with lengths that fall between (inclusive) the minimum and maximum lengths. To accomplish it, you need to set the minimum and maximum lengths.

@C11MIN
Set the Minimum Length (Default: 4)

@C11MAX
Set the Maximum Length (Default: 48)

If minimum length is set to be greater than maximum length, the scanner only decodes Code 11 barcodes with either the minimum or maximum length. If minimum length is same as maximum length, only Code 11 barcodes with that length are to be decoded.

Set the scanner to decode Code 11 barcodes containing between 8 and 12 characters:

1. Scan the **Enter Setup** barcode.
2. Scan the **Set the Minimum Length** barcode.
3. Scan the numeric barcode “8” from the “Digit Barcodes” section in Appendix.
4. Scan the **Save** barcode from the “Save/Cancel Barcodes” section in Appendix.
5. Scan the **Set the Maximum Length** barcode.
6. Scan the numeric barcodes “1” and “2” from the “Digit Barcodes” section in Appendix.
7. Scan the **Save** barcode from the “Save/Cancel Barcodes” section in Appendix.
8. Scan the **Exit Setup** barcode.

@SETUPE1

Enter Setup

Check Character Verification

Check characters are optional for Code 11 and can be added as the last one or two characters, which are calculated values used to verify the integrity of the data.

If the **Disable** option is enabled, the scanner transmits Code 11 barcodes as is.

@C11CHK0

Disable

@C11CHK1

**** One Check Character, MOD11**

@C11CHK2

Two Check Characters, MOD11/MOD11

@C11CHK3

Two Check Characters, MOD11/MOD9

@C11CHK4

One Check Character, MOD11 (Len<=10)

Two Check Characters, MOD11/MOD11(Len>10)

@C11CHK5

One Check Character, MOD11 (Len<=10)

Two Check Characters, MOD11/MOD9 (Len>10)

@SETUPE0

**** Exit Setup**

Transmit Check Character

@C11TCK0
Do Not Transmit Code 11 Check Character

@C11TCK1
**** Transmit Code 11 Check Character**

If you select a check character algorithm and the **Do Not Transmit Check Character** option, Code 11 barcodes with a length that is less than the configured minimum length after having the check character(s) excluded will not be decoded. (For example, when the **One Check Character, MOD11** and **Do Not Transmit Check Character** options are enabled and the minimum length is set to 4, Code 11 barcodes with a total length of 4 characters including the check character cannot be read.)

@SETUPE1

Enter Setup

ISBN

Restore Factory Defaults

@ISBDEF

Restore the Factory Defaults of ISBN

Enable/Disable ISBN

@ISBENA1

Enable ISBN

@ISBENA0

**** Disable ISBN**

If the scanner fails to identify ISBN barcodes, you may first try this solution by scanning the **Enter Setup** barcode and then **Enable ISBN** barcode.

@SETUPE0

**** Exit Setup**

@SETUPE1

Enter Setup

Set ISBN Format

@ISBT101

**** ISBN-10**

@ISBT100

ISBN-13

@SETUPE0

**** Exit Setup**

@SETUPE1

Enter Setup

ISSN

Restore Factory Defaults

@ISSDEF

Restore the Factory Defaults of ISSN

Enable/Disable ISSN

@ISSENA1

Enable ISSN

@ISSENA0

**** Disable ISSN**

If the scanner fails to identify ISSN barcodes, you may first try this solution by scanning the **Enter Setup** barcode and then **Enable ISSN** barcode.

@SETUPE0

**** Exit Setup**

@SETUPE1

Enter Setup

Industrial 25

Restore Factory Defaults

@L25DEF

Restore the Factory Defaults of Industrial 25

Enable/Disable Industrial 25

@L25ENA1

Enable Industrial 25

@L25ENA0

**** Disable Industrial 25**

If the scanner fails to identify Industrial 25 barcodes, you may first try this solution by scanning the **Enter Setup** barcode and then **Enable Industrial 25** barcode.

@SETUPE0

**** Exit Setup**

Set Length Range for Industrial 25

The scanner can be configured to only decode Industrial 25 barcodes with lengths that fall between (inclusive) the minimum and maximum lengths. To accomplish it, you need to set the minimum and maximum lengths.

@L25MIN

Set the Minimum Length (Default: 6)

@L25MAX

Set the Maximum Length (Default: 48)

If minimum length is set to be greater than maximum length, the scanner only decodes Industrial 25 barcodes with either the minimum or maximum length. If minimum length is same as maximum length, only Industrial 25 barcodes with that length are to be decoded.

Set the scanner to decode Industrial 25 barcodes containing between 8 and 12 characters:

1. Scan the **Enter Setup** barcode.
2. Scan the **Set the Minimum Length** barcode.
3. Scan the numeric barcode “8” from the “Digit Barcodes” section in Appendix.
4. Scan the **Save** barcode from the “Save/Cancel Barcodes” section in Appendix.
5. Scan the **Set the Maximum Length** barcode.
6. Scan the numeric barcodes “1” and “2” from the “Digit Barcodes” section in Appendix.
7. Scan the **Save** barcode from the “Save/Cancel Barcodes” section in Appendix.
8. Scan the **Exit Setup** barcode.

@SETUPE1

Enter Setup

Check Character Verification

A check character is optional for Industrial 25 and can be added as the last character. It is a calculated value used to verify the integrity of the data.

- **Disable:** The scanner transmits Industrial 25 barcodes as is.
- **Do Not Transmit Check Character After Verification:** The scanner checks the integrity of all Industrial 25 barcodes to verify that the data complies with the check character algorithm. Barcodes passing the check will be transmitted except the last digit, whereas those failing it will not be transmitted.
- **Transmit Check Character After Verification:** The scanner checks the integrity of all Industrial 25 barcodes to verify that the data complies with the check character algorithm. Barcodes passing the check will be transmitted, whereas those failing it will not be transmitted.

@L25CHK0

**** Disable**

@L25CHK1

Do Not Transmit Check Character After Verification

@L25CHK2

Transmit Check Character After Verification

If the **Do Not Transmit Check Character After Verification** option is enabled, Industrial 25 barcodes with a length that is less than the configured minimum length after having the check character excluded will not be decoded. (For example, when the **Do Not Transmit Check Character After Verification** option is enabled and the minimum length is set to 4, Industrial 25 barcodes with a total length of 4 characters including the check character cannot be read.)

@SETUPE0

**** Exit Setup**

@SETUPE1

Enter Setup

Standard 25

Restore Factory Defaults

@S25DEF

Restore the Factory Defaults of Standard 25

Enable/Disable Standard 25

@S25ENA1

Enable Standard 25

@S25ENA0

**** Disable Standard 25**

If the scanner fails to identify Standard 25 barcodes, you may first try this solution by scanning the **Enter Setup** barcode and then **Enable Standard 25** barcode.

@SETUPE0

**** Exit Setup**

@SETUPE1

Enter Setup

Set Length Range for Standard 25

The scanner can be configured to only decode Standard 25 barcodes with lengths that fall between (inclusive) the minimum and maximum lengths. To accomplish it, you need to set the minimum and maximum lengths.

@S25MIN

Set the Minimum Length (Default: 6)

@S25MAX

Set the Maximum Length (Default: 48)

If minimum length is set to be greater than maximum length, the scanner only decodes Standard 25 barcodes with either the minimum or maximum length. If minimum length is same as maximum length, only Standard 25 barcodes with that length are to be decoded.

Set the scanner to decode Standard 25 barcodes containing between 8 and 12 characters:

1. Scan the **Enter Setup** barcode.
2. Scan the **Set the Minimum Length** barcode.
3. Scan the numeric barcode “8” from the “Digit Barcodes” section in Appendix.
4. Scan the **Save** barcode from the “Save/Cancel Barcodes” section in Appendix.
5. Scan the **Set the Maximum Length** barcode.
6. Scan the numeric barcodes “1” and “2” from the “Digit Barcodes” section in Appendix.
7. Scan the **Save** barcode from the “Save/Cancel Barcodes” section in Appendix.
8. Scan the **Exit Setup** barcode.

@SETUPE0

**** Exit Setup**

Check Character Verification

A check character is optional for Standard 25 and can be added as the last character. It is a calculated value used to verify the integrity of the data.

- **Disable:** The scanner transmits Standard 25 barcodes as is.
- **Do Not Transmit Check Character After Verification:** The scanner checks the integrity of all Standard 25 barcodes to verify that the data complies with the check character algorithm. Barcodes passing the check will be transmitted except the last digit, whereas those failing it will not be transmitted.
- **Transmit Check Character After Verification:** The scanner checks the integrity of all Standard 25 barcodes to verify that the data complies with the check character algorithm. Barcodes passing the check will be transmitted, whereas those failing it will not be transmitted.

@S25CHK0
**** Disable**

@S25CHK1
Do Not Transmit Check Character After Verification

@S25CHK2
Transmit Check Character After Verification

If the **Do Not Transmit Check Character After Verification** option is enabled, Standard 25 barcodes with a length that is less than the configured minimum length after having the check character excluded will not be decoded. (For example, when the **Do Not Transmit Check Character After Verification** option is enabled and the minimum length is set to 4, Standard 25 barcodes with a total length of 4 characters including the check character cannot be read.)

@SETUPE1

Enter Setup

Plessey

Restore Factory Defaults

@PLYDEF

Restore the Factory Defaults of Plessey

Enable/Disable Plessey

@PLYENA1

Enable Plessey

@PLYENA0

**** Disable Plessey**

If the scanner fails to identify Plessey barcodes, you may first try this solution by scanning the **Enter Setup** barcode and then **Enable Plessey** barcode.

@SETUPE0

**** Exit Setup**

@SETUPE1

Enter Setup

Set Length Range for Plessey

The scanner can be configured to only decode Plessey barcodes with lengths that fall between (inclusive) the minimum and maximum lengths. To accomplish it, you need to set the minimum and maximum lengths.

@PLYMIN

Set the Minimum Length (Default: 4)

@PLYMAX

Set the Maximum Length (Default: 48)

If minimum length is set to be greater than maximum length, the scanner only decodes Plessey barcodes with either the minimum or maximum length. If minimum length is same as maximum length, only Plessey barcodes with that length are to be decoded.

Set the scanner to decode Plessey barcodes containing between 8 and 12 characters:

1. Scan the **Enter Setup** barcode.
2. Scan the **Set the Minimum Length** barcode.
3. Scan the numeric barcode “8” from the “Digit Barcodes” section in Appendix.
4. Scan the **Save** barcode from the “Save/Cancel Barcodes” section in Appendix.
5. Scan the **Set the Maximum Length** barcode.
6. Scan the numeric barcodes “1” and “2” from the “Digit Barcodes” section in Appendix.
7. Scan the **Save** barcode from the “Save/Cancel Barcodes” section in Appendix.
8. Scan the **Exit Setup** barcode.

@SETUPE0

**** Exit Setup**

@SETUPE1

Enter Setup

Check Character Verification

Check characters are optional for Plessey and can be added as the last two characters, which are calculated values used to verify the integrity of the data.

- **Disable:** The scanner transmits Plessey barcodes as is.
- **Do Not Transmit Check Character After Verification:** The scanner checks the integrity of all Plessey barcodes to verify that the data complies with the check character algorithm. Barcodes passing the checks will be transmitted except the last two digits, whereas those failing them will not be transmitted.
- **Transmit Check Character After Verification:** The scanner checks the integrity of all Plessey barcodes to verify that the data complies with the check character algorithm. Barcodes passing the checks will be transmitted, whereas those failing them will not be transmitted.

@PLYCHK0

**** Disable**

@PLYCHK1

Do Not Transmit Check Character After Verification

@PLYCHK2

Transmit Check Character After Verification

If the **Do Not Transmit Check Character After Verification** option is enabled, Plessey barcodes with a length that is less than the configured minimum length after having the check characters excluded will not be decoded. (For example, when the **Do Not Transmit Check Character After Verification** option is enabled and the minimum length is set to 4, Plessey barcodes with a total length of 4 characters including the check characters cannot be read.)

@SETUPE0

**** Exit Setup**

@SETUPE1

Enter Setup

MSI-Plessey

Restore Factory Defaults

@MSIDEF

Restore the Factory Defaults of MSI-Plessey

Enable/Disable MSI-Plessey

@MSIENA1

Enable MSI-Plessey

@MSIENA0

**** Disable MSI-Plessey**

If the scanner fails to identify MSI-Plessey barcodes, you may first try this solution by scanning the **Enter Setup** barcode and then **Enable MSI-Plessey** barcode.

@SETUPE0

**** Exit Setup**

@SETUPE1

Enter Setup

Set Length Range for MSI-Plessey

The scanner can be configured to only decode MSI-Plessey barcodes with lengths that fall between (inclusive) the minimum and maximum lengths. To accomplish it, you need to set the minimum and maximum lengths.

@MSIMIN

Set the Minimum Length (Default: 4)

@MSIMAX

Set the Maximum Length (Default: 48)

If minimum length is set to be greater than maximum length, the scanner only decodes MSI-Plessey barcodes with either the minimum or maximum length. If minimum length is same as maximum length, only MSI-Plessey barcodes with that length are to be decoded.

Set the scanner to decode MSI-Plessey barcodes containing between 8 and 12 characters:

1. Scan the **Enter Setup** barcode.
2. Scan the **Set the Minimum Length** barcode.
3. Scan the numeric barcode “8” from the “Digit Barcodes” section in Appendix.
4. Scan the **Save** barcode from the “Save/Cancel Barcodes” section in Appendix.
5. Scan the **Set the Maximum Length** barcode.
6. Scan the numeric barcodes “1” and “2” from the “Digit Barcodes” section in Appendix.
7. Scan the **Save** barcode from the “Save/Cancel Barcodes” section in Appendix.
8. Scan the **Exit Setup** barcode.

@SETUPE0

**** Exit Setup**

@SETUPE1

Enter Setup

Check Character Verification

Check characters are optional for MSI-Plessey and can be added as the last one or two characters, which are calculated values used to verify the integrity of the data.

If the **Disable** option is enabled, the scanner transmits MSI-Plessey barcodes as is.

@MSICHK0

Disable

@MSICHK1

**** One Check Character, MOD10**

@MSICHK2

Two Check Characters, MOD10/MOD10

@MSICHK3

Two Check Characters, MOD10/MOD11

@SETUPE0

**** Exit Setup**

@SETUPE1

Enter Setup

Transmit Check Character

@MSITCK1

**** Transmit MSI-Plessey Check Character**

@MSITCK0

Do Not Transmit MSI-Plessey Check Character

If you select a check character algorithm and the **Do Not Transmit Check Character** option, MSI-Plessey barcodes with a length that is less than the configured minimum length after having the check character(s) excluded will not be decoded. (For example, when the **One Check Character, MOD10** and **Do Not Transmit Check Character** options are enabled and the minimum length is set to 4, MSI-Plessey barcodes with a total length of 4 characters including the check character cannot be read.)

@SETUPE0

**** Exit Setup**

@SETUPE1

Enter Setup

AIM 128

Restore Factory Defaults

@AIMDEF

Restore the Factory Defaults of AIM 128

Enable/Disable AIM 128

@AIMENA1

Enable AIM 128

@AIMENA0

**** Disable AIM 128**

If the scanner fails to identify AIM 128 barcodes, you may first try this solution by scanning the **Enter Setup** barcode and then **Enable AIM 128** barcode.

@SETUPE0

**** Exit Setup**

@SETUPE1

Enter Setup

Set Length Range for AIM 128

The scanner can be configured to only decode AIM 128 barcodes with lengths that fall between (inclusive) the minimum and maximum lengths. To accomplish it, you need to set the minimum and maximum lengths.

@AIMMIN

Set the Minimum Length (Default: 1)

@AIMMAX

Set the Maximum Length (Default: 48)

If minimum length is set to be greater than maximum length, the scanner only decodes AIM 128 barcodes with either the minimum or maximum length. If minimum length is same as maximum length, only AIM 128 barcodes with that length are to be decoded.

Set the scanner to decode AIM 128 barcodes containing between 8 and 12 characters:

1. Scan the **Enter Setup** barcode.
2. Scan the **Set the Minimum Length** barcode.
3. Scan the numeric barcode “8” from the “Digit Barcodes” section in Appendix.
4. Scan the **Save** barcode from the “Save/Cancel Barcodes” section in Appendix.
5. Scan the **Set the Maximum Length** barcode.
6. Scan the numeric barcodes “1” and “2” from the “Digit Barcodes” section in Appendix.
7. Scan the **Save** barcode from the “Save/Cancel Barcodes” section in Appendix.
8. Scan the **Exit Setup** barcode.

@SETUPE0

**** Exit Setup**

@SETUPE1

Enter Setup

ISBT 128

Restore Factory Defaults

@IBTDEF

Restore the Factory Defaults of ISBT 128

Enable/Disable ISBT 128

@IBTENA1

Enable ISBT 128

@IBTENA0

**** Disable ISBT 128**

If the scanner fails to identify ISBT 128 barcodes, you may first try this solution by scanning the **Enter Setup** barcode and then **Enable ISBT 128** barcode.

@SETUPE0

**** Exit Setup**

@SETUPE1

Enter Setup

Code 49

Restore Factory Defaults

@C49DEF

Restore the Factory Defaults of Code 49

Enable/Disable Code 49

@C49ENA1

Enable Code 49

@C49ENA0

**** Disable Code 49**

If the scanner fails to identify Code 49 barcodes, you may first try this solution by scanning the **Enter Setup** barcode and then **Enable Code 49** barcode.

@SETUPE0

**** Exit Setup**

@SETUPE1

Enter Setup

Set Length Range for Code 49

The scanner can be configured to only decode Code 49 barcodes with lengths that fall between (inclusive) the minimum and maximum lengths. To accomplish it, you need to set the minimum and maximum lengths.

@C49MIN

Set the Minimum Length (Default: 1)

@C49MAX

Set the Maximum Length (Default: 80)

If minimum length is set to be greater than maximum length, the scanner only decodes Code 49 barcodes with either the minimum or maximum length. If minimum length is same as maximum length, only Code 49 barcodes with that length are to be decoded.

Set the scanner to decode Code 49 barcodes containing between 8 and 12 characters:

1. Scan the **Enter Setup** barcode.
2. Scan the **Set the Minimum Length** barcode.
3. Scan the numeric barcode “8” from the “Digit Barcodes” section in Appendix.
4. Scan the **Save** barcode from the “Save/Cancel Barcodes” section in Appendix.
5. Scan the **Set the Maximum Length** barcode.
6. Scan the numeric barcodes “1” and “2” from the “Digit Barcodes” section in Appendix.
7. Scan the **Save** barcode from the “Save/Cancel Barcodes” section in Appendix.
8. Scan the **Exit Setup** barcode.

@SETUPE0

**** Exit Setup**

@SETUPE1

Enter Setup

Code 16K

Restore Factory Defaults

@16KDEF

Restore the Factory Defaults of Code 16K

Enable/Disable Code 16K

@16KENA1

Enable Code 16K

@16KENA0

**** Disable Code 16K**

If the scanner fails to identify Code 16K barcodes, you may first try this solution by scanning the **Enter Setup** barcode and then **Enable Code 16K** barcode.

@SETUPE0

**** Exit Setup**

@SETUPE1

Enter Setup

Set Length Range for Code 16K

The scanner can be configured to only decode Code 16K barcodes with lengths that fall between (inclusive) the minimum and maximum lengths. To accomplish it, you need to set the minimum and maximum lengths.

@16KMIN

Set the Minimum Length (Default: 1)

@16KMAX

Set the Maximum Length (Default: 80)

If minimum length is set to be greater than maximum length, the scanner only decodes Code 16K barcodes with either the minimum or maximum length. If minimum length is same as maximum length, only Code 16K barcodes with that length are to be decoded.

Set the scanner to decode Code 16K barcodes containing between 8 and 12 characters:

1. Scan the **Enter Setup** barcode.
2. Scan the **Set the Minimum Length** barcode.
3. Scan the numeric barcode “8” from the “Digit Barcodes” section in Appendix.
4. Scan the **Save** barcode from the “Save/Cancel Barcodes” section in Appendix.
5. Scan the **Set the Maximum Length** barcode.
6. Scan the numeric barcodes “1” and “2” from the “Digit Barcodes” section in Appendix.
7. Scan the **Save** barcode from the “Save/Cancel Barcodes” section in Appendix.
8. Scan the **Exit Setup** barcode.

@SETUPE0

**** Exit Setup**

@SETUPE1

Enter Setup

PDF417

Restore Factory Defaults

@PDFDEF

Restore the Factory Defaults of PDF417

Enable/Disable PDF417

@PDFENA1

**** Enable PDF417**

@PDFENA0

Disable PDF417

If the scanner fails to identify PDF417 barcodes, you may first try this solution by scanning the **Enter Setup** barcode and then **Enable PDF417** barcode.

@SETUPE0

**** Exit Setup**

Set Length Range for PDF417

The scanner can be configured to only decode PDF417 barcodes with lengths that fall between (inclusive) the minimum and maximum lengths. To accomplish it, you need to set the minimum and maximum lengths.

@PDFMIN

Set the Minimum Length (Default: 1)

@PDFMAX

Set the Maximum Length (Default: 2710)

TIPS

Minimum length is not allowed to be greater than maximum length. If you only want to read PDF417 barcodes with a specific length, set both minimum and maximum lengths to be that desired length.

Example

Set the scanner to decode PDF417 barcodes containing between 8 and 12 characters:

1. Scan the **Enter Setup** barcode.
2. Scan the **Set the Minimum Length** barcode.
3. Scan the numeric barcode “8” from the “Digit Barcodes” section in Appendix.
4. Scan the **Save** barcode from the “Save/Cancel Barcodes” section in Appendix.
5. Scan the **Set the Maximum Length** barcode.
6. Scan the numeric barcodes “1” and “2” from the “Digit Barcodes” section in Appendix.
7. Scan the **Save** barcode from the “Save/Cancel Barcodes” section in Appendix.
8. Scan the **Exit Setup** barcode.

PDF417 Twin Code

PDF417 twin code is 2 PDF417 barcodes paralleled vertically or horizontally. They must both be either regular or inverse barcodes. They must have similar specifications and be placed closely together.

There are 3 options for reading PDF417 twin codes:

- ✧ **Single PDF417 Only:** Read either PDF417 code.
- ✧ **Twin PDF417 Only:** Read both PDF417 codes.
- ✧ **Both Single & Twin:** Read both PDF417 codes. If successful, transmit as twin PDF417 only. Otherwise, try single PDF417 only.

@PDFDOU0
**** Single PDF417 Only**

@PDFDOU1
Twin PDF417 Only

@PDFDOU2
Both Single & Twin

@SETUPE1

Enter Setup

PDF417 Inverse

Regular barcode: Dark bars on a bright background.

Inverse barcode: Bright bars on a dark background.

@PDFINV0

**** Decode Regular PDF417 Barcodes Only**

@PDFINV1

Decode Inverse PDF417 Barcodes Only

@PDFINV2

Decode Both

Character Encoding

@PDFENC0

**** Default Character Encoding**

@PDFENC1

UTF-8

@SETUPE0

**** Exit Setup**

@SETUPE1

Enter Setup

PDF417 ECI Output

@PDFECI0

Disable PDF417 ECI Output

@PDFECI1

**** Enable PDF417 ECI Output**

@SETUPE0

**** Exit Setup**

@SETUPE1

Enter Setup

Micro PDF417

Restore Factory Defaults

@MPDDEF

Restore the Factory Defaults of Micro PDF417

Enable/Disable Micro PDF417

@MPDENA1

Enable Micro PDF417

@MPDENA0

**** Disable Micro PDF417**

If the scanner fails to identify Micro PDF417 barcodes, you may first try this solution by scanning the **Enter Setup** barcode and then **Enable Micro PDF417** barcode.

@SETUPE0

**** Exit Setup**

Set Length Range for Micro PDF417

The scanner can be configured to only decode Micro PDF417 barcodes with lengths that fall between (inclusive) the minimum and maximum lengths. To accomplish it, you need to set the minimum and maximum lengths.

@MPDMIN

Set the Minimum Length (Default: 1)

@MPDMAX

Set the Maximum Length (Default: 366)

TIPS

Minimum length is not allowed to be greater than maximum length. If you only want to read Micro PDF417 barcodes with a specific length, set both minimum and maximum lengths to be that desired length.

Example

Set the scanner to decode Micro PDF417 barcodes containing between 8 and 12 characters:

1. Scan the **Enter Setup** barcode.
2. Scan the **Set the Minimum Length** barcode.
3. Scan the numeric barcode “8” from the “Digit Barcodes” section in Appendix.
4. Scan the **Save** barcode from the “Save/Cancel Barcodes” section in Appendix.
5. Scan the **Set the Maximum Length** barcode.
6. Scan the numeric barcodes “1” and “2” from the “Digit Barcodes” section in Appendix.
7. Scan the **Save** barcode from the “Save/Cancel Barcodes” section in Appendix.
8. Scan the **Exit Setup** barcode.

@SETUPE1

Enter Setup

QR Code

Restore Factory Defaults

@QRCDEF

Restore the Factory Defaults of QR Code

Enable/Disable QR Code

@QRCENA1

**** Enable QR Code**

@QRCENA0

Disable QR Code

If the scanner fails to identify QR Code barcodes, you may first try this solution by scanning the **Enter Setup** barcode and then **Enable QR Code** barcode.

@SETUPE0

**** Exit Setup**

Set Length Range for QR Code

The scanner can be configured to only decode QR Code barcodes with lengths that fall between (inclusive) the minimum and maximum lengths. To accomplish it, you need to set the minimum and maximum lengths.

@QRCMIN

Set the Minimum Length (Default: 1)

@QRCMAX

Set the Maximum Length (Default: 7089)

Minimum length is not allowed to be greater than maximum length. If you only want to read QR Code barcodes with a specific length, set both minimum and maximum lengths to be that desired length.

Set the scanner to decode QR Code barcodes containing between 8 and 12 characters:

1. Scan the **Enter Setup** barcode.
2. Scan the **Set the Minimum Length** barcode.
3. Scan the numeric barcode “8” from the “Digit Barcodes” section in Appendix.
4. Scan the **Save** barcode from the “Save/Cancel Barcodes” section in Appendix.
5. Scan the **Set the Maximum Length** barcode.
6. Scan the numeric barcodes “1” and “2” from the “Digit Barcodes” section in Appendix.
7. Scan the **Save** barcode from the “Save/Cancel Barcodes” section in Appendix.
8. Scan the **Exit Setup** barcode.

@SETUPE1

Enter Setup

QR Twin Code

QR twin code is 2 QR barcodes paralleled vertically or horizontally. They must both be either regular or inverse barcodes. They must have similar specifications and be placed closely together.

There are 3 options for reading QR twin codes:

- ✧ **Single QR Only:** Read either QR code.
- ✧ **Twin QR Only:** Read both QR codes. Transmission sequence: left (upper) QR code followed by right (lower) QR code.
- ✧ **Both Single & Twin:** Read both QR codes. If successful, transmit as twin QR only. Otherwise, try single QR only.

@QRCDOU0

**** Single QR Only**

@QRCDOU1

Twin QR Only

@QRCDOU2

Both Single & Twin

@SETUPE0

**** Exit Setup**

@SETUPE1

Enter Setup

QR Inverse

Regular barcode: Dark bars on a bright background.

Inverse barcode: Bright bars on a dark background.

@QRCINV0

**** Decode Regular QR Barcodes Only**

@QRCINV1

Decode Inverse QR Barcodes Only

@QRCINV2

Decode Both

Character Encoding

@QRCENC0

**** Default Character Encoding**

@QRCENC1

UTF-8

@SETUPE0

**** Exit Setup**

@SETUPE1

Enter Setup

QR ECI Output

@QRCECI0

Disable QR ECI Output

@QRCECI1

**** Enable QR ECI Output**

@SETUPE0

**** Exit Setup**

@SETUPE1

Enter Setup

Micro QR Code

Restore Factory Defaults

@MQRDEF

Restore the Factory Defaults of Micro QR

Enable/Disable Micro QR

@MQRENA1

**** Enable Micro QR**

@MQRENA0

Disable Micro QR

If the scanner fails to identify Micro QR barcodes, you may first try this solution by scanning the **Enter Setup** barcode and then **Enable Micro QR** barcode.

@SETUPE0

**** Exit Setup**

Set Length Range for Micro QR

The scanner can be configured to only decode Micro QR barcodes with lengths that fall between (inclusive) the minimum and maximum lengths. To accomplish it, you need to set the minimum and maximum lengths.

@MQRMIN

Set the Minimum Length (Default: 1)

@MQRMAX

Set the Maximum Length (Default: 35)

Minimum length is not allowed to be greater than maximum length. If you only want to read Micro QR barcodes with a specific length, set both minimum and maximum lengths to be that desired length.

Set the scanner to decode Micro QR Code barcodes containing between 8 and 12 characters:

1. Scan the **Enter Setup** barcode.
2. Scan the **Set the Minimum Length** barcode.
3. Scan the numeric barcode “8” from the “Digit Barcodes” section in Appendix.
4. Scan the **Save** barcode from the “Save/Cancel Barcodes” section in Appendix.
5. Scan the **Set the Maximum Length** barcode.
6. Scan the numeric barcodes “1” and “2” from the “Digit Barcodes” section in Appendix.
7. Scan the **Save** barcode from the “Save/Cancel Barcodes” section in Appendix.
8. Scan the **Exit Setup** barcode.

@SETUPE1

Enter Setup

Aztec

Restore Factory Defaults

@AZTDEF

Restore the Factory Defaults of Aztec Code

Enable/Disable Aztec Code

@AZTENA1

Enable Aztec Code

@AZTENA0

**** Disable Aztec Code**

If the scanner fails to identify Aztec Code barcodes, you may first try this solution by scanning the **Enter Setup** barcode and then **Enable Aztec Code** barcode.

@SETUPE0

**** Exit Setup**

@SETUPE1

Enter Setup

Set Length Range for Aztec Code

The scanner can be configured to only decode Aztec barcodes with lengths that fall between (inclusive) the minimum and maximum lengths. To accomplish it, you need to set the minimum and maximum lengths.

@AZTMIN

Set the Minimum Length (Default: 1)

@AZTMAX

Set the Maximum Length (Default: 3832)

Minimum length is not allowed to be greater than maximum length. If you only want to read Aztec barcodes with a specific length, set both minimum and maximum lengths to be that desired length.

Set the scanner to decode Aztec barcodes containing between 8 and 12 characters:

1. Scan the **Enter Setup** barcode.
2. Scan the **Set the Minimum Length** barcode.
3. Scan the numeric barcode “8” from the “Digit Barcodes” section in Appendix.
4. Scan the **Save** barcode from the “Save/Cancel Barcodes” section in Appendix.
5. Scan the **Set the Maximum Length** barcode.
6. Scan the numeric barcodes “1” and “2” from the “Digit Barcodes” section in Appendix.
7. Scan the **Save** barcode from the “Save/Cancel Barcodes” section in Appendix.
8. Scan the **Exit Setup** barcode.

@SETUPE0

**** Exit Setup**

Read Multi-barcodes on an Image

There are three options:

- **Mode 1:** Read one barcode only.
- **Mode 2:** Read fixed number of barcodes only.
- **Mode 3:** Composite Reading. Read fixed number of barcodes first. If unsuccessful, read one barcode only.

@AZTMOD1
**** Mode 1**

@AZTMOD2
Mode 2

@AZTMOD3
Mode 3

@SETUPE1

Enter Setup

Set the Number of Barcodes

@AZTMUL1

**** 1**

@AZTMUL2

2

@AZTMUL3

3

@AZTMUL4

4

@AZTMUL5

5

@AZTMUL6

6

@AZTMUL7

7

@AZTMUL8

8

@SETUPE0

**** Exit Setup**

@SETUPE1

Enter Setup

Character Encoding

@AZTENC0

**** Default Character Encoding**

@AZTENC1

UTF-8

Aztec ECI Output

@AZTECI0

Disable Aztec ECI Output

@AZTECI1

**** Enable Aztec ECI Output**

@SETUPE0

**** Exit Setup**

@SETUPE1

Enter Setup

Data Matrix

Restore Factory Defaults

@DMCDEF

Restore the Factory Defaults of Data Matrix

Enable/Disable Data Matrix

@DMCENA1

**** Enable Data Matrix**

@DMCENA0

Disable Data Matrix

If the scanner fails to identify Data Matrix barcodes, you may first try this solution by scanning the **Enter Setup** barcode and then **Enable Data Matrix** barcode.

@SETUPE0

**** Exit Setup**

@SETUPE1

Enter Setup

Set Length Range for Data Matrix

The scanner can be configured to only decode Data Matrix barcodes with lengths that fall between (inclusive) the minimum and maximum lengths. To accomplish it, you need to set the minimum and maximum lengths.

@DMCMIN

Set the Minimum Length (Default: 1)

@DMCMAX

Set the Maximum Length (Default: 3116)

Minimum length is not allowed to be greater than maximum length. If you only want to read Data Matrix barcodes with a specific length, set both minimum and maximum lengths to be that desired length.

Set the scanner to decode Data Matrix barcodes containing between 8 and 12 characters:

1. Scan the **Enter Setup** barcode.
2. Scan the **Set the Minimum Length** barcode.
3. Scan the numeric barcode “8” from the “Digit Barcodes” section in Appendix.
4. Scan the **Save** barcode from the “Save/Cancel Barcodes” section in Appendix.
5. Scan the **Set the Maximum Length** barcode.
6. Scan the numeric barcodes “1” and “2” from the “Digit Barcodes” section in Appendix.
7. Scan the **Save** barcode from the “Save/Cancel Barcodes” section in Appendix.
8. Scan the **Exit Setup** barcode.

@SETUPE0

**** Exit Setup**

@SETUPE1

Enter Setup

Data Matrix Twin Code

Data Matrix twin code is 2 Data Matrix barcodes paralleled vertically or horizontally. They must both be either regular or inverse barcodes. They must have similar specifications and be placed closely together.

There are 3 options for reading Data Matrix twin codes:

- **Single Data Matrix Only:** Read either Data Matrix code.
- **Twin Data Matrix Only:** Read both Data Matrix codes. Transmission sequence: left (upper) Data Matrix code followed by right (lower) Data Matrix code.
- **Both Single & Twin:** Read both Data Matrix codes. If successful, transmit as twin Data Matrix only. Otherwise, try single Data Matrix only.

@DMCDOU0

**** Single Data Matrix Only**

@DMCDOU1

Twin Data Matrix Only

@DMCDOU2

Both Single & Twin

@SETUPE0

**** Exit Setup**

@SETUPE1

Enter Setup

Rectangular Barcode

Data Matrix has two formats:

Square barcodes having the same amount of modules in length and width: 10*10, 12*12.... 144*144.

Rectangular barcodes having different amounts of models in length and width: 6*16, 6*14...14*22.

@DMCREC1

**** Enable Rectangular Barcode**

@DMCREC0

Disable Rectangular Barcode

Data Matrix Inverse

Regular barcode: Dark bars on a bright background.

Inverse barcode: Bright bars on a dark background.

@DMCINV0

**** Decode Regular Data Matrix Barcodes Only**

@DMCINV1

Decode Inverse Data Matrix Barcodes Only

@DMCINV2

Decode Both

@SETUPE0

**** Exit Setup**

@SETUPE1

Enter Setup

Character Encoding

@DMCENC0

**** Default Character Encoding**

@DMCENC1

UTF-8

Data Matrix ECI Output

@DMCECI0

Disable Data Matrix ECI Output

@DMCECI1

**** Enable Data Matrix ECI Output**

@SETUPE0

**** Exit Setup**

@SETUPE1

Enter Setup

Maxicode

Restore Factory Defaults

@MXCDEF

Restore the Factory Defaults of Maxicode

Enable/Disable Maxicode

@MXCENA1

Enable Maxicode

@MXCENA0

**** Disable Maxicode**

If the scanner fails to identify Maxicode barcodes, you may first try this solution by scanning the **Enter Setup** barcode and then **Enable Maxicode** barcode.

@SETUPE0

**** Exit Setup**

@SETUPE1

Enter Setup

Set Length Range for Maxicode

The scanner can be configured to only decode Maxicode barcodes with lengths that fall between (inclusive) the minimum and maximum lengths. To accomplish it, you need to set the minimum and maximum lengths.

@MXCMIN

Set the Minimum Length (Default: 1)

@MXCMAX

Set the Maximum Length (Default:150)

Minimum length is not allowed to be greater than maximum length. If you only want to read Maxicode barcodes with a specific length, set both minimum and maximum lengths to be that desired length.

Set the scanner to decode Maxicode barcodes containing between 8 and 12 characters:

1. Scan the **Enter Setup** barcode.
2. Scan the **Set the Minimum Length** barcode.
3. Scan the numeric barcode “8” from the “Digit Barcodes” section in Appendix.
4. Scan the **Save** barcode from the “Save/Cancel Barcodes” section in Appendix.
5. Scan the **Set the Maximum Length** barcode.
6. Scan the numeric barcodes “1” and “2” from the “Digit Barcodes” section in Appendix.
7. Scan the **Save** barcode from the “Save/Cancel Barcodes” section in Appendix.
8. Scan the **Exit Setup** barcode.

@SETUPE0

**** Exit Setup**

@SETUPE1

Enter Setup

Chinese Sensible Code

Restore Factory Defaults

@CSCDEF

Restore the Factory Defaults of Chinese Sensible Code

Enable/Disable Chinese Sensible Code

@CSCENA1

Enable Chinese Sensible Code

@CSCENA0

**** Disable Chinese Sensible Code**

If the scanner fails to identify Chinese Sensible Code barcodes, you may first try this solution by scanning the **Enter Setup** barcode and then **Enable Chinese Sensible Code** barcode.

@SETUPE0

**** Exit Setup**

@SETUPE1

Enter Setup

Set Length Range for Chinese Sensible Code

The scanner can be configured to only decode Chinese Sensible Code barcodes with lengths that fall between (inclusive) the minimum and maximum lengths. To accomplish it, you need to set the minimum and maximum lengths.

@CSCMIN

Set the Minimum Length (Default: 1)

@CSCMAX

Set the Maximum Length (Default: 7827)

Minimum length is not allowed to be greater than maximum length. If you only want to read Chinese Sensible Code barcodes with a specific length, set both minimum and maximum lengths to be that desired length.

Set the scanner to decode Chinese Sensible Code barcodes containing between 8 and 12 characters:

1. Scan the **Enter Setup** barcode.
2. Scan the **Set the Minimum Length** barcode.
3. Scan the numeric barcode “8” from the “Digit Barcodes” section in Appendix.
4. Scan the **Save** barcode from the “Save/Cancel Barcodes” section in Appendix.
5. Scan the **Set the Maximum Length** barcode.
6. Scan the numeric barcodes “1” and “2” from the “Digit Barcodes” section in Appendix.
7. Scan the **Save** barcode from the “Save/Cancel Barcodes” section in Appendix.
8. Scan the **Exit Setup** barcode.

@SETUPE0

**** Exit Setup**

Chinese Sensible Twin Code

Chinese Sensible twin code is 2 Chinese Sensible barcodes paralleled vertically or horizontally. They must both be either regular or inverse barcodes. They must have similar specifications and be placed closely together.

There are 3 options for reading Chinese Sensible twin codes:

- ✧ **Single Chinese Sensible Code Only:** Read either Chinese Sensible code.
- ✧ **Twin Chinese Sensible Code Only:** Read both Chinese Sensible codes. Transmission sequence: left (upper) Chinese Sensible code followed by right (lower) Chinese Sensible code.
- ✧ **Both Single & Twin:** Read both Chinese Sensible codes. If successful, transmit as twin Chinese Sensible Code only. Otherwise, try single Chinese Sensible Code only.

@CSCDOU0
**** Single Chinese Sensible Code Only**

@CSCDOU1
Twin Chinese Sensible Code Only

@CSCDOU2
Both Single & Twin

@SETUPE1

Enter Setup

Chinese Sensible Code Inverse

Regular barcode: Dark bars on a bright background.

Inverse barcode: Bright bars on a dark background.

@CSCINV0

**** Decode Regular Chinese Sensible Barcodes Only**

@CSCINV1

Decode Inverse Chinese Sensible Barcodes Only

@CSCINV2

Decode Both

@SETUPE0

**** Exit Setup**

@SETUPE1

Enter Setup

GM Code

Restore Factory Defaults

@GMCDEF

Restore the Factory Defaults of GM

Enable/Disable GM

@GMCENA1

Enable GM

@GMCENA0

**** Disable GM**

If the scanner fails to identify GM barcodes, you may first try this solution by scanning the **Enter Setup** barcode and then **Enable GM** barcode.

@SETUPE0

**** Exit Setup**

@SETUPE1

Enter Setup

Set Length Range for GM

The scanner can be configured to only decode GM barcodes with lengths that fall between (inclusive) the minimum and maximum lengths. To accomplish it, you need to set the minimum and maximum lengths.

@GMCMIN

Set the Minimum Length (Default: 1)

@GMCMAX

Set the Maximum Length (Default: 2751)

Minimum length is not allowed to be greater than maximum length. If you only want to read GM barcodes with a specific length, set both minimum and maximum lengths to be that desired length.

Set the scanner to decode GM barcodes containing between 8 and 12 characters:

1. Scan the **Enter Setup** barcode.
2. Scan the **Set the Minimum Length** barcode.
3. Scan the numeric barcode “8” from the “Digit Barcodes” section in Appendix.
4. Scan the **Save** barcode from the “Save/Cancel Barcodes” section in Appendix.
5. Scan the **Set the Maximum Length** barcode.
6. Scan the numeric barcodes “1” and “2” from the “Digit Barcodes” section in Appendix.
7. Scan the **Save** barcode from the “Save/Cancel Barcodes” section in Appendix.
8. Scan the **Exit Setup** barcode.

@SETUPE0

**** Exit Setup**

@SETUPE1

Enter Setup

Code One

Restore Factory Defaults

@ONEDEF

Restore the Factory Defaults of Code One

Enable/Disable Code One

@ONEENA1

Enable Code One

@ONEENA0

**** Disable Code One**

If the scanner fails to identify Code One barcodes, you may first try this solution by scanning the **Enter Setup** barcode and then **Enable Code One** barcode.

@SETUPE0

**** Exit Setup**

Set Length Range for Code One

The scanner can be configured to only decode Code One barcodes with lengths that fall between (inclusive) the minimum and maximum lengths. To accomplish it, you need to set the minimum and maximum lengths.

@ONEMIN

Set the Minimum Length (Default: 1)

@ONEMAX

Set the Maximum Length (Default: 3550)

Minimum length is not allowed to be greater than maximum length. If you only want to read Code One barcodes with a specific length, set both minimum and maximum lengths to be that desired length.

Set the scanner to decode Code One barcodes containing between 8 and 12 characters:

1. Scan the **Enter Setup** barcode.
2. Scan the **Set the Minimum Length** barcode.
3. Scan the numeric barcode “8” from the “Digit Barcodes” section in Appendix.
4. Scan the **Save** barcode from the “Save/Cancel Barcodes” section in Appendix.
5. Scan the **Set the Maximum Length** barcode.
6. Scan the numeric barcodes “1” and “2” from the “Digit Barcodes” section in Appendix.
7. Scan the **Save** barcode from the “Save/Cancel Barcodes” section in Appendix.
8. Scan the **Exit Setup** barcode.

@SETUPE1

Enter Setup

USPS Postnet

Restore Factory Defaults

@PNTDEF

Restore the Factory Defaults of USPS Postnet

Enable/Disable USPS Postnet

@PNTENA1

Enable USPS Postnet

@PNTENA0

**** Disable USPS Postnet**

If the scanner fails to identify USPS Postnet barcodes, you may first try this solution by scanning the **Enter Setup** barcode and then **Enable USPS Postnet** barcode.

Transmit Check Character

@PNTCHK1

Do Not Transmit USPS Postnet Check Character

@PNTCHK2

**** Transmit USPS Postnet Check Character**

@SETUPE0

**** Exit Setup**

@SETUPE1

Enter Setup

USPS Intelligent Mail

Restore Factory Defaults

@ILGDEF

Restore the Factory Defaults of USPS Intelligent Mail

Enable/Disable USPS Intelligent Mail

@ILGENA1

Enable USPS Intelligent Mail

@ILGENA0

**** Disable USPS Intelligent Mail**

If the scanner fails to identify USPS Intelligent Mail barcodes, you may first try this solution by scanning the **Enter Setup** barcode and then **Enable USPS Intelligent Mail** barcode.

@SETUPE0

**** Exit Setup**

@SETUPE1

Enter Setup

Royal Mail

Restore Factory Defaults

@ROYDEF

Restore the Factory Defaults of Royal Mail

Enable/Disable Royal Mail

@ROYENA1

Enable Royal Mail

@ROYENA0

**** Disable Royal Mail**

If the scanner fails to identify Royal Mail barcodes, you may first try this solution by scanning the **Enter Setup** barcode and then **Enable Royal Mail** barcode.

@SETUPE0

**** Exit Setup**

@SETUPE1

Enter Setup

USPS Planet

Restore Factory Defaults

@PLADEF

Restore the Factory Defaults of USPS Planet

Enable/Disable USPS Planet

@PLAENA1

Enable USPS Planet

@PLAENA0

**** Disable USPS Planet**

If the scanner fails to identify USPS Planet barcodes, you may first try this solution by scanning the **Enter Setup** barcode and then **Enable USPS Planet** barcode.

Transmit Check Character

@PLACHK1

Do Not Transmit USPS Planet Check Character

@PLACHK2

**** Transmit USPS Planet Check Character**

@SETUPE0

**** Exit Setup**

@SETUPE1

Enter Setup

KIX Post

Restore Factory Defaults

@KIXDEF

Restore the Factory Defaults of KIX Post

Enable/Disable KIX Post

@KIXENA1

Enable KIX Post

@KIXENA0

**** Disable KIX Post**

If the scanner fails to identify KIX Post barcodes, you may first try this solution by scanning the **Enter Setup** barcode and then **Enable KIX Post** barcode.

@SETUPE0

**** Exit Setup**

@SETUPE1

Enter Setup

Australian Postal

Restore Factory Defaults

@APLDEF

Restore the Factory Defaults of Australian Postal

Enable/Disable Australian Postal

@APLENA1

Enable Australian Postal

@APLENA0

**** Disable Australian Postal**

If the scanner fails to identify Australian Postal barcodes, you may first try this solution by scanning the **Enter Setup** barcode and then **Enable Australian Postal** barcode.

@SETUPE0

**** Exit Setup**

@SETUPE1

Enter Setup

Specific OCR-B

Restore Factory Defaults

@SOBDEF

Restore the Factory Defaults of Specific OCR-B

Enable/Disable Specific OCR-B

@SOBENA1

Enable Specific OCR-B

@SOBENA0

**** Disable Specific OCR-B**

If the scanner fails to identify Specific OCR-B barcodes, you may first try this solution by scanning the **Enter Setup** barcode and then **Enable Specific OCR-B** barcode.

@SETUPE0

**** Exit Setup**

@SETUPE1

Enter Setup

Passport OCR

Restore Factory Defaults

@PASDEF

Restore the Factory Defaults of Passport OCR

Enable/Disable Passport OCR

@PASENA1

Enable Passport OCR

@PASENA0

**** Disable Passport OCR**

If the scanner fails to identify Passport OCR barcodes, you may first try this solution by scanning the **Enter Setup** barcode and then **Enable Passport OCR** barcode.

@SETUPE0

**** Exit Setup**

@SETUPE1

Enter Setup

Chapter 8 Data Formatter

Introduction

You may use the Data Formatter to modify the scanner's output. For example, you can use the Data Formatter to insert characters at certain points in barcode data or to suppress/ replace/ send certain characters in barcode data as it is scanned.

Normally, when you scan a barcode, it gets outputted automatically; however, when you create a format, you must use a "send" command (see the "Send Commands" section in this chapter) within the format programming to output data. Multiple data formats can be programmed into the scanner. The maximum size of all data formats created is 2048 characters. By default, the data formatter is disabled. Enable it when required. If you have changed data format settings, and wish to clear all formats and return to the factory defaults, scan the **Default Data Format** barcode below.

@DFMDEF

Default Data Format

Add a Data Format

Data format is used to edit barcode data. When you create a data format, you must select one of the four labels (Format_0, Format_1, Format_2 and Format_3) for your data format, specify the application scope of data format (such as barcode type and data length) and include formatter commands. Multiple data formats may be created using the same label. When scanned data does not match your data format requirements, you will hear the non-match error beep (if the non-match error beep is ON).

There are two methods to program a data format: Programming with barcodes and programming with serial commands.

Programming with Barcodes

The following explains how to program a data format by scanning the specific barcodes. Scanning any irrelevant barcode or failing to follow the setting procedure will result in programming failure. To find the alphanumeric barcodes needed to create a data format, see the "Digit Barcodes" section in Appendix.

Step 1: Scan the **Enter Setup** barcode.

@SETUPE0

**** Exit Setup**

Step 2: Scan the **Add Data Format** barcode.

@DFMADD

Add Data Format

Step 3: Select a label (Format_0 or Format_1 or Format_2 or Format_3).

Scan a numeric barcode **0** or **1** or **2** or **3** to label this data format Format_0 or Format_1 or Format_2 or Format_3.

Step 4: Select formatter command type.

Specify what type of formatter commands will be used. Scan a numeric barcode “6” to select formatter command type 6. (See the “Formatter Command Type 6” section in this chapter for more information)

Step 5: Set interface type

Scan **999** for any interface type.

Step 6: Set Symbology ID Number

Refer to the “Symbology ID Number” section in Appendix and find the ID number of the symbology to which you want to apply the data format. Scan three numeric barcodes for the symbology ID number. If you wish to create a data format for all symbologies, scan **999**.

Step 7: Set barcode data length

Specify what length of data will be acceptable for this symbology. Scan the four numeric barcodes that represent the data length. 9999 is a universal number, indicating all lengths. For example, 32 characters should be entered as 0032.

Step 8: Enter formatter command

Refer to the “Formatter Command Type 6” section in this chapter. Scan the alphanumeric barcodes that represent the command you need to edit data. For example, when a command is F141, you should scan F141.

Step 9: Scan the **Save** barcode from the “Save/Cancel Barcodes” section in Appendix to save your data format.

Example: Program a Format_0 data format using formatter command type 6, Code 128 containing 10 characters applicable, send all characters followed by “A”.

1. Scan the **Enter Setup** barcode	Enter the Setup mode
2. Scan the **Add Data Format** barcode	Add a data format
3. Scan the **0** barcode	Select Format_0 as the label
4. Scan the **6** barcode	Select formatter command type 6
5. Scan the **9** barcode three times	All interface types applicable
6. Scan the barcodes **002**	Only Code 128 applicable
7. Scan the barcodes **0010**	Only a length of 10 characters applicable
8. Scan the alphanumeric barcodes **F141**	Send all characters followed by “A” (HEX: 41)
9. Scan the **Save** barcode	Save the data format

To streamline the programming process, you may as well generate a batch barcode by inputting the command (e.g. **@DFMADD069990020010F141;**) used to create a data format. See the “Use Batch Barcode” section in Chapter 10 to learn how to put a batch barcode into use.

When creating multiple data formats sharing a label, the formats are separated from each other by a vertical bar (|) in the batch command, e.g. **@DFMADD069990029999F141|069990039999F142|169990049999F143;**.

Programming with Serial Commands

A data format can also be created by serial commands (HEX) sent from the host device. **All commands must be entered in uppercase letters**.

The syntax consists of the following elements:

Prefix: "~<SOH>0000" (HEX: **7E 01 30 30 30 30**), 6 characters.

Storage type: "@" (HEX: **40**) or "**#**" (HEX: **23**), 1 character. "@" means permanent setting which will not be lost by removing power from the scanner or rebooting it; "**#**" means temporary setting which will be lost by removing power from the scanner or rebooting it.

Add Data Format Command: "DFMADD" (HEX: **44 46 4D 41 44 44**), 6 characters.

Data format label: "0" (HEX: **30**) or "1" (HEX: **31**) or "2" (HEX: **32**) or "3" (HEX: **33**), 1 character. "0", "1", "2" and "3" represent Format_0, Format_1, Format_2 and Format_3 respectively.

Formatter command type: "6" (HEX: **36**), 1 character.

Interface type: "999" (HEX: **39 39 39**), 3 characters.

Symbology ID Number: The ID number of the symbology to which you want to apply the data format, 3 characters. 999 indicates all symbologies.

Data length: The length of data that will be acceptable for this symbology, 4 characters. 9999 indicates all lengths. For example, 32 characters should be entered as 0032.

Formatter commands: The command string used to edit data. For more information, see the "Formatter Command Type 6" section in this chapter.

Suffix: ";<ETX>" (HEX: **3B 03**), 2 characters.

Example: Program a Format_0 data format using formatter command type 6, Code 128 containing 10 characters applicable, send all characters followed by "A".

Enter: **7E 01 30 30 30 30 40 44 46 4D 41 44 44 30 36 39 39 39 30 30 33 39 39 39 39 46 31 34 31 3B 03**
(~<SOH>0000@DFMADD069990020010F141;<ETX>)

Response: **02 01 30 30 30 30 40 44 46 4D 41 44 44 30 36 39 39 39 30 30 33 39 39 39 39 46 31 34 31 06 3B 03**
(<STX><SOH>0000@DFMADD069990020010F141<ACK>;<ETX>)

When creating multiple data formats sharing a label, the formats are separated from each other by a vertical bar (|) in the serial command.
Example: ~<SOH>0000@DFMADD069990020010F141|069990039999F142|069990049999F143;<ETX>

Enable/Disable Data Formatter

When Data Formatter is disabled, the barcode data is outputted to the host as read, including prefixes and suffixes.

@DFMENA0

**** Disable Data Formatter**

You may wish to require the data to conform to a data format you have created. The following settings can be applied to your data format:

Enable Data Formatter, Required, Keep Prefix/Suffix: Scanned data that meets your data format requirements is modified accordingly and gets outputted along with prefixes and suffixes (if prefix and suffix are enabled). Any data that does not match your data format requirements generates an error beep (if Non-Match Error Beep is turned ON) and the data in that barcode is not transmitted.

Enable Data Formatter, Required, Drop Prefix/Suffix: Scanned data that meets your data format requirements is modified accordingly and gets outputted without prefixes and suffixes (even if prefix and suffix are enabled). Any data that does not match your data format requirements generates an error beep (if Non-Match Error Beep is turned ON) and the data in that barcode is not transmitted.

Enable Data Formatter, Not Required, Keep Prefix/Suffix: Scanned data that meets your data format requirements is modified accordingly and gets outputted along with prefixes and suffixes (if prefix and suffix are enabled). Barcode data that does not match your data format requirements is transmitted as read along with prefixes and suffixes (if prefix and suffix are enabled).

Enable Data Formatter, Not Required, Drop Prefix/Suffix: Scanned data that meets your data format requirements is modified accordingly and gets outputted without prefixes and suffixes (even if prefix and suffix are enabled). Barcode data that does not match your data format requirements is transmitted as read along with prefixes and suffixes (if prefix and suffix are enabled).

@SETUPE1

Enter Setup

@DFMENA1

Enable Data Formatter, Required, Keep Prefix/Suffix

@DFMENA2

Enable Data Formatter, Required, Drop Prefix/Suffix

@DFMENA3

Enable Data Formatter, Not Required, Keep Prefix/Suffix

@DFMENA4

Enable Data Formatter, Not Required, Drop Prefix/Suffix

Non-Match Error Beep

If Non-Match Error Beep is turned ON, the scanner generates an error beep when a barcode is encountered that does not match your required data format.

@DFMTON0

Non-Match Error Beep Off

@DFMTON1

**** Non-Match Error Beep On**

@SETUPE0

**** Exit Setup**

@SETUPE1

Enter Setup

Data Format Selection

After enabling the Data Formatter, you can select a data format you want to use by scanning the appropriate barcode below.

@DFMUSE0

**** Format_0**

@DFMUSE1

Format_1

@DFMUSE2

Format_2

@DFMUSE3

Format_3

@SETUPE0

**** Exit Setup**

Change Data Format for a Single Scan

You can switch between data formats for a single scan. The next barcode is scanned using the data format selected here, then reverts to the format you have selected above.

For example, you may have set your scanner to use the data format you saved as Format_3. You can switch to Format_1 for a single trigger pull by scanning the **Single Scan – Format_1** barcode below. The next barcode that is scanned uses Format_1, then reverts back to Format_3.

Note: This setting will be lost by removing power from the scanner, or turning off/ rebooting the device.

@DFMSIN0
Single Scan – Format_0

@DFMSIN1
Single Scan – Format_1

@DFMSIN2
Single Scan – Format_2

@DFMSIN3
Single Scan – Format_3

@SETUPE1

Enter Setup

Clear Data Format

There are two methods to remove data format created from your scanner:

Delete one data format: Scan the **Clear One** barcode, a numeric barcode (0-3) and the **Save** barcode. For example, to delete Format_2, you should scan the **Clear One** barcode, the **2** barcode and the **Save** barcode

Delete all data formats: Scan the **Clear All** barcode.

@DFMCAL

Clear All

@DFMCLR

Clear One

Query Data Formats

You may scan the appropriate barcode below to get the information of data format(s) created by you or preset by manufacturer. For instance, if you have added Format_0 as per the example in the “Add a Data Format” section in this chapter, scanning the **Query Current Data Formats** barcode, you will get the result: **Data Format0:069990020010F141;**.

@DFMQCU

Query Current Data Formats

@DFMQFA

Query Preset Data Formats

@SETUPE0

**** Exit Setup**

Formatter Command Type 6

When working with the Data Formatter, a virtual cursor is moved along your input data string. The following commands are used to both move this cursor to different positions, and to select, replace, and insert data into the final output. For the hex value of ASCII characters involved in the commands, refer to the “ASCII Table” in Appendix.

Send Commands

F1 Send all characters

Syntax=F1xx (xx: The insert character’s hex value)
Include in the output message all of the characters from the input message, starting from current cursor position, followed by an insert character.

F2 Send a number of characters

Syntax=F2nnxx (nn: The numeric value (00-99) for the number of characters; xx: The insert character’s hex value)

Include in the output message a number of characters followed by an insert character. Start from the current cursor position and continue for “nn” characters or through the last character in the input message, followed by character “xx.”

F2 Example: Send a number of characters

1234567890ABCDEFGHIJ

Send the first 10 characters from the barcode above, followed by a carriage return.

Command string: **F2100D**

F2 is the “Send a number of characters” command

10 is the number of characters to send

0D is the hex value for a CR

The data is output as: **1234567890**
<CR>

F3 Send all characters up to a particular character

Syntax=F3ssxx (ss: The particular character's hex value; xx: The insert character's hex value)

Include in the output message all characters from the input message, starting with the character at the current cursor position and continuing to, but not including, the particular character "ss," followed by character "xx." The cursor is moved forward to the "ss" character.

F3 Example: Send all characters up to a particular character

1234567890ABCDEFGHIJ

Using the barcode above, send all characters up to but not including "D," followed by a carriage return.

Command string: **F3440D**

F3 is the "Send all characters up to a particular character" command

44 is the hex value for a "D"

0D is the hex value for a CR

The data is output as: **1234567890ABC**
<CR>

B9 Send all characters up to a particular string

Syntax=B9nnnns...s (nnnn: The length of the particular string; s...s: The hex value of each character in the particular string)

Include in the output message all characters from the input message, starting with the character at the current cursor position and continuing to, but not including, the particular string “s...s.” The cursor is moved forward to the beginning of the “s...s” string.

B9 Example: Send all characters up to a particular string

1234567890ABCDEFGHIJ

Using the barcode above, send all characters up to but not including “AB.”

Command string: **B900024142**

B9 is the “Send all characters up to a particular string” command

0002 is the length of the particular string (2 characters)

41 is the hex value for a “A” (character in the string)

42 is the hex value for a “B” (character in the string)

The data is output as: **1234567890**

E9 Send all but the last characters

Syntax=E9nn (nn: The numeric value (00-99) for the number of characters that will not be sent at the end of the message)

Include in the output message all but the last “nn” characters, starting from the current cursor position. The cursor is moved forward to one position past the last input message character included.

F4 Insert a character multiple times

Syntax=F4xxnn (xx: The insert character’s hex value; nn: The numeric value (00-99) for the number of times it should be sent)

Send “xx” character “nn” times in the output message, leaving the cursor in the current position.

E9 and F4 Example: Send all but the last characters, followed by 2 tabs

1234567890ABCDEFGHIJ

Send all characters except for the last 8 from the barcode above, followed by 2 tabs.

Command string: **E908F40902**

E9 is the “Send all but the last characters” command

08 is the number of characters at the end to ignore

F4 is the “Insert a character multiple times” command

09 is the hex value for a horizontal tab

02 is the number of time the tab character is sent

The data is output as: **1234567890AB<tab><tab>**

B3 Insert symbology name

Insert the name of the barcode’s symbology in the output message, without moving the cursor.

B4 Insert barcode length

Insert the barcode’s length in the output message, without moving the cursor. The length is expressed as a numeric string and does not include leading zeros.

B3 and B4 Example: Insert the symbology name and length

1234567890ABCDEFGHIJ

Send the symbology name and length before the barcode data from the barcode above. Break up these insertions with spaces. End with a carriage return.

Command string: **B3F42001B4F42001F10D**

B3 is the “Insert symbology name” command

F4 is the “Insert a character multiple times” command

20 is the hex value for a space

01 is the number of time the space character is sent

B4 is the “Insert barcode length” command

F4 is the “Insert a character multiple times” command

20 is the hex value for a space

01 is the number of time the space character is sent

F1 is the “Send all characters” command

0D is the hex value for a CR

The data is output as: **Code128 20 1234567890ABCDEFGHIJ**
<CR>

Move Commands

F5 Move the cursor forward a number of characters

Syntax=F5nn (nn: The numeric value (00-99) for the number of characters the cursor should be moved ahead)

Move the cursor ahead “nn” characters from current cursor position.

F5 Example: Move the cursor forward and send the data

1234567890ABCDEFGHIJ

Move the cursor forward 3 characters, then send the rest of the barcode data from the barcode above. End with a carriage return.

Command string: **F503F10D**

F5 is the “Move the cursor forward a number of characters” command

03 is the number of characters to move the cursor

F1 is the “Send all characters” command

0D is the hex value for a CR

The data is output as: **4567890ABCDEFGHIJ**
<CR>

F6 Move the cursor backward a number of characters

Syntax=F6nn (nn: The numeric value (00-99) for the number of characters the cursor should be moved back)

Move the cursor back “nn” characters from current cursor position.

F7 Move the cursor to the beginning

Syntax＝F7

Move the cursor to the first character in the input message.

EA Move the cursor to the end

Syntax＝EA

Move the cursor to the last character in the input message.

Search Commands

F8 Search forward for a character

Syntax＝F8xx (xx: The search character's hex value)

Search the input message forward for "xx" character from the current cursor position, leaving the cursor pointing to the "xx" character.

F8 Example: Send barcode data that starts after a particular character

1234567890ABCDEFGHIJ

Search for the letter "D" in barcodes and send all the data that follows, including the "D". Using the barcode above:

Command string: **F844F10D**

F8 is the "Search forward for a character" command

44 is the hex value for "D"

F1 is the "Send all characters" command

0D is the hex value for a CR

The data is output as: **DEFGHIJ**

<CR>

F9 Search backward for a character

Syntax＝F9xx(xx: The search character's hex value)

Search the input message backward for "xx" character from the current cursor position, leaving the cursor pointing to the "xx" character.

B0 Search forward for a string

Syntax=B0nnnnS (nnnn: The string length (up to 9999); S: The ASCII hex value of each character in the string)

Search forward for “S” string from the current cursor position, leaving cursor pointing to “S” string. For example, B0000454657374 will search forward for the first occurrence of the 4-character string “Test.”

B0 Example: Send barcode data that starts after a string of characters

1234567890ABCDEFGHIJ

Search for the letters “FGH” in barcodes and send all the data that follows, including “FGH.” Using the barcode above:

Command string: **B00003464748F10D**

B0 is the “Search forward for a string” command

0003 is the string length (3 characters)

46 is the hex value for “F”

47 is the hex value for “G”

48 is the hex value for “H”

F1 is the “Send all characters” command

0D is the hex value for a CR

The data is output as: **FGHIJ**
<CR>

B1 Search backward for a string

Syntax＝B1nnnnS (nnnn: The string length (up to 9999); S: The ASCII hex value of each character in the string)

Search backward for “S” string from the current cursor position, leaving cursor pointing to “S” string. For example, B1000454657374 will search backward for the first occurrence of the 4-character string “Test.”

E6 Search forward for a non-matching character

Syntax=E6xx (xx: The search character's hex value)

Search the input message forward for the first non-"xx" character from the current cursor position, leaving the cursor pointing to the non-"xx" character.

E6 Example: Remove zeros at the beginning of barcode data

0000123abc

This example shows a barcode that has been zero filled. You may want to ignore the zeros and send all the data that follows. E6 searches forward for the first character that is not zero, then sends all the data after, followed by a carriage return. Using the barcode above:

Command string: **E630F10D**

E6 is the "Search forward for a non-matching character" command

30 is the hex value for 0

F1 is the "Send all characters" command

0D is the hex value for a CR

The data is output as: **123abc**

<CR>

E7 Search backward for a non-matching character

Syntax＝E7xx(xx: The search character's hex value)

Search the input message backward for the first non-"xx" character from the current cursor position, leaving the cursor pointing to the non-"xx" character.

Miscellaneous Commands

FB Suppress characters

Syntax＝FBnnxxyy..zz (nn: The numeric value (00-15) for the number of suppressed characters; xxyy..zz: The hex value of the characters to be suppressed)

Suppress all occurrences of up to 15 different characters, starting at the current cursor position, as the cursor is advanced by other commands.

FB Example: Remove spaces in barcode data

12 34_5*6 78

This example shows a barcode that has spaces in the data. You may want to remove the spaces before sending the data. Using the barcode above:

Command string: **FB0120F10D**

FB is the “Suppress characters” command

01 is the number of the characters to be suppressed

20 is the hex value for a space

F1 is the “Send all characters” command

0D is the hex value for a CR

The data is output as: **1234_5*678**

<CR>

E4 Replace characters

Syntax＝E4nnxx$_1$xx$_2$yy$_1$yy$_2$…zz$_1$zz$_2$(nn: The total count of the number of characters (characters to be replaced plus replacement characters; xx$_1$: The characters to be replaced, xx$_2$: The replacement characters, continuing through zz$_1$ and zz$_2$)

Replace up to 15 characters in the output message, without moving the cursor.

E4 Example: Replace zeros with CRs in barcode data

12304560780AB

If the barcode has characters that the host application does not want included, you can use the E4 command to replace those characters with something else. In this example, you will replace the zeros in the barcode above with carriage returns.

Command string: **E402300DF10D**

E4 is the “Replace characters” command

02 is the total count of characters to be replaced, plus the replacement characters (0 is replaced by CR, so total characters=2)

30 is the hex value for 0

0D is the hex value for a CR (the character that will replace the 0)

F1 is the “Send all characters” command

0D is the hex value for a CR

The data is output as: **123**
456
78
AB
<CR>

BA Replace a string with another

Syntax＝BAnn$NN_1SS_1NN_2SS_2$

nn: The count of replacements to be made, if nn=00 or nn>=the number of occurrences of a string to be replaced, then replace all occurrences of that string.

NN_1: The length of the string to be replaced, NN_1>0.

SS_1: The ASCII hex value of each character in the string to be replaced.

NN_2: The length of replacement string, NN_2>=0. To replace string "SS_1" with NUL (i.e. delete string "SS_1"), you should set NN_2 to 00 and leave out SS_2.

SS_2: The ASCII hex value of each character in the replacement string.

From the current cursor position, search forward for the occurrence of "SS_1" string (of length "NN_1") and replace the string with "SS_2" string (of length "NN_2") in the output message until every "SS_1" stringis replaced or the count of replacements made reaches "nn" times, without moving the cursor.

BA Example: Replace "23"s with "ABC"s in barcode data

1234Abc23R0123U

If the barcode has a string of characters that the host application does not want included, you can use the BA command to replace the string with something else. In this example, you will replace the "23"s in the barcode above with "ABC"s.

Command string: **BA00023233034142 43F100**

BA is the "Replace a string with another" command

00 is the count of replacements to be made, 00 means to replace all occurrences of that string

02 is the length of the string to be replaced

32 is the hex value for 2 (character in the string to be replaced)

33 is the hex value for 3 (character in the string to be replaced)

03 is the length of the replacement string

41 is the hex value for A (character in the replacement string)

42 is the hex value for B (character in the replacement string)

43 is the hex value for C (character in the replacement string)

F1 is the “Send all characters” command

00 is the hex value for a NUL

The data is output as: **1ABC4AbcABCR01ABCU**

BA Example: Remove only the first occurrence of “23”s in barcode data

If the barcode has a string of characters that the host application wants removed, you can use the BA command to replace the string with NUL. In this example, you will remove the first occurrence of “23” in the barcode above.

Command string: **BA0102323300F100**

BA is the “Replace a string with another” command

01 is the count of replacements to be made

02 is the length of the string to be replaced

32 is the hex value for 2 (character in the string to be replaced)

33 is the hex value for 3 (character in the string to be replaced)

00 is the length of the replacement string, 00 means to replace the string to be replaced with NUL

F1 is the “Send all characters” command

00 is the hex value for a NUL

The data is output as: **14Abc23R0123U**

EF Insert a delay

Syntax＝EFnnnn (nnnn: The delay in 5ms increments, up to 9999)

Inserts a delay of up to 49,995 milliseconds (in multiples of 5), starting from the current cursor position. This command can only be used with USB HID Keyboard.

EF Example: Insert a delay of 1s between the 5th and 6th character

Send the first 5 characters in a barcode, wait for 1s, then send the rest of the barcode data.

Command string: **F20500EF0200E900**

F2 is the “Send a number of characters” command

05 is the number of characters to send

00 is the hex value for a Null character

EF is the “Insert a delay” command

0200 is the delay value (5msX200=1000ms=1s)

E9 is the “Send all but the last characters” command

00 is the number of characters that will not be sent at the end of the message

B5 Insert key strokes

Syntax=B5nnssxx (nn: The number of keys pressed (without key modifiers); ss: the key modifier from the table below; xx: the key number from the “Unicode Key Maps” in Appendix.)

Insert a key stroke or combination of key strokes. Key strokes are dependent on your keyboard (see the “Unicode Key Maps” in Appendix). This command can only be used with USB HID Keyboard.

Key Modifiers	
No Key Modifier	00
Shift Left	01
Shift Right	02
Alt Left	04
Alt Right	08
Control Left	10
Control Right	20

For example, B501001F inserts an “a” on a U.S. style keyboard. B5 = the command, 01 = number of keys pressed (without the key modifier), 00 is No Key Modifier, and 1F is the “a” key. If an “A” were to be inserted, B501011F or B501021F would be entered.

If there are two keystrokes, the syntax would change from Syntax=B5nnssxx for one keystroke to Syntax=B5nnssxxssxx. An example that would insert “aA” is as follows: B502001F011F.

Note: Key modifiers can be added together when needed. Example: Shift Left + Alt Left + Control Left =15.

Chapter 9 Prefix & Suffix

Introduction

A 1D barcode could contain digits, letters, symbols, etc. A 2D barcode could contain more data, such as Chinese characters and other multi-byte characters. However, in real applications, they do not and should not have all information we need, such as barcode type, data acquisition time and delimiter, in order to keep the barcodes short and flexible.

Preffix and suffix are how to fulfill the needs mentioned above. They can be added, removed and modified while the original barcode data remains intact.

Barcode processing procedure:

1. Edit data with Data Formatter
2. Append prefix/suffix
3. Pack data
4. Append terminating character

@SETUPE1

Enter Setup

Global Settings

Enable/Disable All Prefixes/Suffixes

Disable All Prefixes/Suffixes: Transmit barcode data with no prefix/suffix.

Enable All Prefixes/Suffixes: Allow to append Code ID prefix, AIM ID prefix, custom prefix/suffix and terminating character to the barcode data before the transmission.

@APSENA0

**** Disable All Prefixes/Suffixes**

@APSENA1

Enable All Prefixes/Suffixes

Prefix Sequence

@PRESEQ0

**** Code ID+ Custom +AIM ID**

@PRESEQ1

Custom + Code ID + AIM ID

@SETUPE0

**** Exit Setup**

@SETUPE1

Enter Setup

Custom Prefix

Enable/Disable Custom Prefix

If custom prefix is enabled, you are allowed to append to the data a user-defined prefix that cannot exceed 10 characters. For example, if the custom prefix is “AB” and the barcode data is “123”, the Host will receive “AB123”.

@CPRENA0

**** Disable Custom Prefix**

@CPRENA1

Enable Custom Prefix

Set Custom Prefix

To set a custom prefix, scan the **Set Custom Prefix** barcode then the numeric barcodes corresponding to the hexadecimal value of a desired prefix then the **Save** barcode.

Note: A custom prefix cannot exceed 10 characters.

@CPRSET

Set Custom Prefix

Example

Set the custom prefix to “CODE” (HEX: 0x43/0x4F/0x44/0x45):

1. Scan the **Enter Setup** barcode.
2. Scan the **Set Custom Prefix** barcode.
3. Scan the numeric barcodes “4”, “3”, “4”, “F”, “4”, “4”, “4” and “5” from the “Digit Barcodes” section in Appendix.
4. Scan the **Save** barcode from the “Save/Cancel Barcodes” section in Appendix.
5. Scan the **Enable Custom Prefix** barcode.
6. Scan the **Exit Setup** barcode.

@SETUPE0

**** Exit Setup**

AIM ID Prefix

AIM (Automatic Identification Manufacturers) ID defines symbology identifier (For the details, see the "AIM ID Table" section in Appendix). If AIM ID prefix is enabled, the scanner will add the symbology identifier before the scanned data after decoding.

@AIDENA0
**** Disable AIM ID Prefix**

@AIDENA1
Enable AIM ID Prefix

AIM ID is not user programmable.

@SETUPE1

Enter Setup

Code ID Prefix

Code ID can also be used to identify barcode type. Unlike AIM ID, Code ID is user programmable. Code ID can only consist of one or two English letters.

@CIDENA0

**** Disable Code ID Prefix**

@CIDENA1

Enable Code ID Prefix

Restore All Default Code IDs

For the information of default Code IDs, see the “Code ID Table” section in Appendix.

@CIDDEF

Restore All Default Code IDs

Modify Code ID

See the examples below to learn how to modify a Code ID and restore the default Code IDs of all symbologies.

@SETUPE0

**** Exit Setup**

Example

Modify PDF417 Code ID to be "p" (HEX: 0x70):

1. Scan the **Enter Setup** barcode.
2. Scan the **Modify PDF417 Code ID** barcode.
3. Scan the numeric barcodes "7" and "0" from the "Digit Barcodes" section in Appendix.
4. Scan the **Save** barcode from the "Save/Cancel Barcodes" section in Appendix.
5. Scan the **Exit Setup** barcode.

Restore the default Code IDs of all symbologies:

1. Scan the **Enter Setup** barcode.
2. Scan the **Restore All Default Code IDs** barcode**.**
3. Scan the **Exit Setup** barcode.

@SETUPE1

Enter Setup

1D symbologies:

@CID002

Modify Code 128 Code ID

@CID003

Modify GS1-128 Code ID

@CID004

Modify EAN-8 Code ID

@CID005

Modify EAN-13 Code ID

@CID006

Modify UPC-E Code ID

@CID007

Modify UPC-A Code ID

@CID008

Modify Interleaved 2 of 5 Code ID

@SETUPE0

**** Exit Setup**

@SETUPE1

Enter Setup

@CID009

Modify ITF-14 Code ID

@CID010

Modify ITF-6 Code ID

@CID011

Modify Matrix 2 of 5 Code ID

@CID013

Modify Code 39 Code ID

@CID015

Modify Codabar Code ID

@CID017

Modify Code 93 Code ID

@CID019

Modify China Post 25 Code ID

@CID020

Modify AIM 128 Code ID

@SETUPE0

**** Exit Setup**

@SETUPE1

Enter Setup

@CID021

Modify ISBT 128 Code ID

@CID023

Modify ISSN Code ID

@CID024

Modify ISBN Code ID

@CID025

Modify Industrial 25 Code ID

@CID026

Modify Standard 25 Code ID

@CID027

Modify Plessey Code ID

@CID028

Modify Code 11 Code ID

@CID029

Modify MSI-Plessy Code ID

@SETUPE0

**** Exit Setup**

@SETUPE1

Enter Setup

@CID030

Modify GS1 Composite Code ID

@CID031

Modify GS1 Databar Code ID

@CID132

Modify Code 49 Code ID

@CID133

Modify Code 16K Code ID

@SETUPE0

**** Exit Setup**

@SETUPE1

Enter Setup

2D symbologies:

@CID032

Modify PDF417 Code ID

@CID033

Modify QR Code ID

@CID034

Modify Aztec Code ID

@CID035

Modify Data Matrix Code ID

@CID036

Modify Maxicode Code ID

@CID039

Modify Chinese Sensible Code ID

@CID041

Modify GM Code ID

@SETUPE0

**** Exit Setup**

@SETUPE1

Enter Setup

@CID042

Modify Micro PDF417 Code ID

@CID043

Modify Micro QR Code ID

@CID048

Modify Code One Code ID

@SETUPE0

**** Exit Setup**

Postal symbologies:

@CID096
Modify USPS Postnet Code ID

@CID097
Modify USPS Inteligent Mail Code ID

@CID098
Modify Royal Mail Code ID

@CID099
Modify USPS Planet Code ID

@CID100
Modify KIX Post Code ID

@CID101
Modify Australian Postal Code ID

@SETUPE1

Enter Setup

Custom Suffix

Enable/Disable Custom Suffix

If custom suffix is enabled, you are allowed to append to the data a user-defined suffix that cannot exceed 10 characters. For example, if the custom suffix is “AB” and the barcode data is “123”, the Host will receive “123AB”.

@CSUENA0

**** Disable Custom Suffix**

@CSUENA1

Enable Custom Suffix

Set Custom Suffix

To set a custom suffix, scan the **Set Custom Suffix** barcode then the numeric barcodes corresponding to the hexadecimal value of a desired suffix then the **Save** barcode.

Note: A custom suffix cannot exceed 10 characters.

@CSUSET

Set Custom Suffix

Example

Set the custom suffix to “CODE” (HEX: 0x43/0x4F/0x44/0x45):

1. Scan the **Enter Setup** barcode.
2. Scan the **Set Custom Suffix** barcode.
3. Scan the numeric barcodes “4”, “3”, “4”, “F”, “4”, “4”, “4” and “5” from the “Digit Barcodes” section in Appendix.
4. Scan the **Save** barcode from the “Save/Cancel Barcodes” section in Appendix.
5. Scan the **Enable Custom Suffix** barcode.
6. Scan the **Exit Setup** barcode.

@SETUPE0

**** Exit Setup**

Data Packing

Introduction

Data packing is designed for a specific group of users who want to have the data packed before transmission. Data packing influences data format, so it is advised to disable this feature when it is not required.

Data Packing Options

Disable Data Packing: Transmit decoded data in raw format (unpacketed).

Enable Data Packing, Format 1: Transmit decoded data with the packet format 1 defined below.

Packet format 1: [STX + ATTR + LEN] + [AL_TYPE + DATA] + [LRC]

STX: 0x02

ATTR: 0x00

LEN: Barcode data length is expressed in 2 bytes ranging from 0x0000 (0) to 0xFFFF (65535).

AL_TYPE: 0x36

DATA: Raw barcode data.

LRC: Check digit.
LRC calculation algorithm: computation sequence: 0xFF+LEN+AL_TYPE+DATA; computation method is XOR, byte by byte.

Enable Data Packing, Format 2: Transmit decoded data with the packet format 2 defined below.

Packet format 2: [STX + ATTR + LEN] + [AL_TYPE] + [Symbology_ID + DATA] + [LRC]

STX: 0x02

ATTR: 0x00

LEN: Barcode data length is expressed in 2 bytes ranging from 0x0000 (0) to 0xFFFF (65535).

AL_TYPE: 0x3B

Symbology_ID: The ID number of symbology, 1 byte.

DATA: Raw barcode data.

LRC: Check digit.
LRC calculation algorithm: computation sequence: 0xFF+LEN+AL_TYPE+Symbology_ID+DATA; computation method is XOR, byte by byte.

@SETUPE1

Enter Setup

@PACKAG0

**** Disable Data Packing**

@PACKAG1

Enable Data Packing, Format 1

@PACKAG2

Enable Data Packing, Format 2

@SETUPE0

**** Exit Setup**

@SETUPE1

Enter Setup

Terminating Character Suffix

Enable/Disable Terminating Character Suffix

A terminating character such as carriage return (CR) or carriage return/line feed pair (CRLF) can only be used to mark the end of data, which means nothing can be added after it.

@TSUENA0

**** Disable Terminating Character Suffix**

@TSUENA1

Enable Terminating Character Suffix

Set Terminating Character Suffix

To set a terminating character suffix, scan the **Set Terminating Character Suffix** barcode then the numeric barcodes corresponding to the hexadecimal value of a desired terminating character then the **Save** barcode.

Note: A terminating character suffix cannot exceed 2 characters.

@TSUSET

Set Terminating Character Suffix

@TSUSET0D

Set Terminating Character to CR (0x0D)

@TSUSET0D0A

Set Terminating Character to CRLF (0x0D,0x0A)

@SETUPE0

**** Exit Setup**

Example

Set the terminating character suffix to 0x0A:

1. Scan the **Enter Setup** barcode.
2. Scan the **Set Terminating Character Suffix** barcode.
3. Scan the numeric barcodes “0” and “A” from the “Digit Barcodes” section in Appendix.
4. Scan the **Save** barcode from the “Save/Cancel Barcodes” section in Appendix.
5. Scan the **Enable Terminating Character Suffix** barcode.
6. Scan the **Exit Setup** barcode.

@SETUPE1

Enter Setup

Chapter 10 Batch Programming

Introduction

Batch programming enables users to integrate a batch of commands into a single batch barcode.

Listed below are batch programming rules:

1. Command format: Command + Parameter Value.

2. Each command is terminated by a semicolon (;). Note that there is no space between a command and its terminator semicolon.

3. Use the barcode generator software to generate a 2D batch barcode.

Example: Create a batch barcode for **Normal Illumination**, **Sense Mode**, **Decode Session Timeout** = 2s, **Disable Interleaved 2 of 5**:

1. Input the commands:

   @ILLSCN1;SCNMOD2;ORTSET2000;I25ENA0;

2. Generate a batch barcode.

When setting up a scanner with the above configuration, scan the **Enable Batch Barcode** barcode and then the batch barcode generated.

@BATCHS

Enable Batch Barcode

@SETUPE0

**** Exit Setup**

Create a Batch Command

A batch command may contain a number of individual commands each of which is terminated by a semicolon (;).

For more information, refer to the “Use of Programming Command” section in Chapter 3.

Create a Batch Barcode

Batch barcodes can be produced in the format of PDF417, QR Code or Data Matrix.

Example: Create a batch barcode for **Normal Illumination**, **Sense Mode**, **Decode Session Timeout** = 2s, **Disable Interleaved 2 of 5**:

1. Input the following commands:

   @ILLSCN1;SCNMOD2;ORTSET2000;I25ENA0;

2. Generate a PDF417 batch barcode.

Use Batch Barcode

To put a batch barcode into use, scan the following barcodes. (Use the example above.)

@SETUPE1
Enter Setup

@BATCHS
Enable Batch Barcode

Batch Barcode

@SETUPE0
Exit Setup

Appendix

Digit Barcodes

0~9

@DIGIT0

0

@DIGIT1

1

@DIGIT2

2

@DIGIT3

3

@DIGIT4

4

@DIGIT5

5

@DIGIT6

6

@DIGIT7

7

@DIGIT8

8

@DIGIT9

9

A~F

@DIGITA

A

@DIGITB

B

@DIGITC

C

@DIGITD

D

@DIGITE

E

@DIGITF

F

Save/Cancel Barcodes

After reading numeric barcode(s), you need to scan the **Save** barcode to save the data. If you scan the wrong digit(s), you can either scan the **Cancel** barcode and then start the configuration all over again, or scan the **Delete the Last Digit** barcode and then the correct digit, or scan the **Delete All Digits** barcode and then the digits you want.

For instance, after reading the **Maximum Length** barcode and numeric barcodes “1”, “2” and “3”, you scan:

- ✧ **Delete the Last Digit:** The last digit “3” will be removed.
- ✧ **Delete All Digits:** All digits “123” will be removed.
- ✧ **Cancel:** The maximum length configuration will be cancelled. And the scanner is still in the setup mode.

@DIGSAV

Save

@DIGCAN

Cancel

@DIGDEL

Delete the Last Digit

@DIGDAL

Delete All Digits

Factory Defaults Table

Parameter	Factory Default	Remark
System Settings		
Barcode Programming	Disabled (Exit Setup)	
Programming Barcode Data	Do not transmit	
Illumination	Normal	
Aiming	Normal	
Good Read LED	On	
Good Read LED Duration	Short (20ms)	
Power On Beep	On	
Good Read Beep	On	
Good Read Beep Duration	Medium (80ms)	
Good Read Beep Frequency	Medium (2730Hz)	
Good Read Beep Volume	Loud	
Good Read Vibration	Off	
Good Read Vibration Duration	Medium (80ms)	
Scan Mode	Level Mode	
Decode Session Timeout	3,000ms.	1-3,600,000ms; 0: Infinite
Image Stabilization Timeout (Sense Mode)	200ms	0-3,000ms
Reread Timeout	Disabled	
	1,500ms	1-3,600,000ms
Reset Reread Timeout	Off	
Image Decoding Timeout	500ms	1-3,000ms
Sensitivity	Medium Sensitivity	
Scanning Preference	Normal Mode	
Trigger Commands	Disabled	
Read Barcode	On	
Smart Stand Mode	On	
Decode Area	Whole Area Decoding	
Specify Decoding Area	40% top, 60% bottom, 40% left, 60% right	
Image Flipping	Do Not Flip	
Bad Read Message	Off	
	NG	1-7 characters
Default Interface	USB CDC	

Wireless Communications		
Operating Mode	Cradle Mode	
Batch Mode Option	Off	
Prevent Same Barcode Storage	Off	
Batch Mode Transmit Delay	No Transmit Delay (0ms)	
End of Transmission Message	EOT	
Auto Clear Stored Data after Transmission	Off	
Retransmission	Off	
Transmission Timeout	200ms	
Retransmission Count	3 (retransmissions)	
Wireless Communication Mode	Point-to-Point Mode	
Time Stamp	Do Not Send	
Time Stamp Format	Format 1: (YYYY/MM/DD,HH:MM:SS)	
RS-232 Interface		
Baud Rate	9600	
Parity Check	None	
Data Bits	8	
Stop Bits	1	
Hardware Auto Flow Control	Disabled	
USB Interface		
USB Country Keyboard	US keyboard	USB HID Keyboard
Emulate ALT+Keypad	Off	USB HID Keyboard
Code Page	Code Page 1252 (West European Latin)	USB HID Keyboard
Unicode Encoding	Off	USB HID Keyboard
Emulate Keypad with Leading Zero	On	USB HID Keyboard
Function Key Mapping	Disable	USB HID Keyboard
Inter-Keystroke Delay	No Delay	USB HID Keyboard
Convert Case	No Case Conversion	USB HID Keyboard
Emulate Numeric Keypad 1	Off	USB HID Keyboard
Emulate Numeric Keypad 2	Off	USB HID Keyboard
Polling Rate	4ms	USB HID Keyboard
Symbologies		
Global Settings		
1D Twin Code	Single 1D Code Only	
Surround GS1 AI’s with Parentheses	Do Not Surround GS1 AI’s with Parentheses	

Code 128		
Code 128	Enabled	
Maximum Length	48	
Minimum Length	1	
EAN-8		
EAN-8	Enabled	
Check Character	Transmit	
2-Digit Add-On Code	Disabled	
5-Digit Add-On Code	Disabled	
Convert EAN-8 to EAN-13	Disabled	
EAN-13		
EAN-13	Enabled	
Check Character	Transmit	
2-Digit Add-On Code	Disabled	
5-Digit Add-On Code	Disabled	
Add-On Code	Not Required	
EAN-13 Beginning with 290 Add-On Code Required	Do Not Require Add-On Code	
EAN-13 Beginning with 378/379 Add-On Code Required	Do Not Require Add-On Code	
EAN-13 Beginning with 414/419 Add-On Code Required	Do Not Require Add-On Code	
EAN-13 Beginning with 434/439 Add-On Code Required	Do Not Require Add-On Code	
EAN-13 Beginning with 977 Add-On Code Required	Do Not Require Add-On Code	
EAN-13 Beginning with 978 Add-On Code Required	Do Not Require Add-On Code	
EAN-13 Beginning with 979 Add-On Code Required	Do Not Require Add-On Code	
UPC-E		
UPC-E	Enabled	
Check Character	Transmit	
2-Digit Add-On Code	Disabled	
5-Digit Add-On Code	Disabled	
Transmit Preamble Character	System Character	

Convert UPC-E to UPC-A	Disabled	
UPC-A		
UPC-A	Enabled	
Check Character	Transmit	
2-Digit Add-On Code	Disabled	
5-Digit Add-On Code	Disabled	
Transmit Preamble Character	No Preamble	
Coupon		
UPC-A/EAN-13 with Extended Coupon Code	Disabled	
Coupon GS1 DataBar Output	Disabled	
Interleaved 2 of 5		
Interleaved 2 of 5	Enabled	
Maximum Length	80	
Minimum Length	6	No less than 4
Check Character Verification	Disabled	
Febraban		
Febraban	Disabled	
Transmit Delay per Character	Disabled	
	70ms	
Transmit Delay per 12 Characters	Disabled	
	500ms	
ITF-14		
ITF-14	Disabled	
ITF-6		
ITF-6	Disabled	
Matrix 2 of 5		
Matrix 2 of 5	Enabled	
Maximum Length	80	
Minimum Length	4	No less than 4
Check Character Verification	Disabled	
Code 39		
Code 39	Enabled	
Maximum Length	48	
Minimum Length	1	

Check Character Verification	Disabled	
Start/Stop Character	Do not transmit	
Code 39 Full ASCII	Disabled	
Code 32 Pharmaceutical (PARAF)	Disabled	
Code 32 Prefix	Disabled	
Code 32 Start/Stop Character	Do not transmit	
Code 32 Check Character	Do not transmit	
Codabar		
Codabar	Enabled	
Maximum Length	60	
Minimum Length	2	
Check Character Verification	Disabled	
Start/Stop Character	Do not transmit	
	ABCD/ABCD	
Code 93		
Code 93	Disabled	
Maximum Length	48	
Minimum Length	1	No less than 1
Check Character Verification	Do Not Transmit Check Character After Verification	
China Post 25		
China Post 25	Disabled	
Maximum Length	48	
Minimum Length	1	
Check Character Verification	Disabled	
GS1-128 (UCC/EAN-128)		
GS1-128	Enabled	
Maximum Length	48	
Minimum Length	1	
GS1 Databar		
GS1 Databar	Enabled	
Application Identifier “01”	Transmit	
EAN•UCC Composite		
GS1 Composite	Disabled	
UPC/EAN Composite	Disabled	
Code 11		

Code 11	Disabled	
Maximum Length	48	
Minimum Length	4	No less than 4
Check Character Verification	One Check Character, MOD11	
Check Character	Transmit	
ISBN		
ISBN	Disabled	
Set ISBN Format	ISBN-10	
ISSN		
ISSN	Disabled	
Industrial 25		
Industrial 25	Disabled	
Maximum Length	48	
Minimum Length	6	No less than 4
Check Character Verification	Disabled	
Standard 25		
Standard 25	Disabled	
Maximum Length	48	
Minimum Length	6	No less than 4
Check Character Verification	Disabled	
Plessey		
Plessey	Disabled	
Maximum Length	48	
Minimum Length	4	No less than 4
Check Character Verification	Disabled	
MSI-Plessey		
MSI-Plessey	Disabled	
Maximum Length	48	
Minimum Length	4	No less than 4
Check Character Verification	One Check Character, MOD10	
Check Character	Transmit	
AIM 128		
AIM 128	Disabled	
Maximum Length	48	
Minimum Length	1	

ISBT 128		
ISBT 128	Disabled	
Code 49		
Code 49	Disabled	
Maximum Length	80	
Minimum Length	1	
Code 16K		
Code 16K	Disabled	
Maximum Length	80	
Minimum Length	1	
PDF417		
PDF417	Enabled	
Maximum Length	2710	
Minimum Length	1	
PDF417 Twin Code	Single PDF417 Only	
PDF417 Inverse	Decode Regular PDF417 Barcodes Only	
Character Encoding	Default Character Encoding	
PDF417 ECI Output	Enabled	
Micro PDF417		
Micro PDF417	Disabled	
Maximum Length	366	
Minimum Length	1	
QR Code		
QR Code	Enabled	
Maximum Length	7089	
Minimum Length	1	
QR Twin Code	Single QR Only	
QR Inverse	Decode Regular QR Barcodes Only	
Character Encoding	Default Character Encoding	
QR ECI Output	Enabled	
Micro QR Code		
Micro QR	Enabled	
Maximum Length	35	
Minimum Length	1	
Aztec		

Aztec Code	Disabled	
Maximum Length	3832	
Minimum Length	1	
Read Multi-barcodes on an Image	Mode 1	
Set the Number of Barcodes	1	
Character Encoding	Default Character Encoding	
Aztec ECI Output	Enabled	
Data Matrix		
Data Matrix	Enabled	
Maximum Length	3116	
Minimum Length	1	
Data Matrix Twin Code	Single Data Matrix Only	
Rectangular Barcode	Enabled	
Data Matrix Inverse	Decode Regular Data Matrix Barcodes Only	
Character Encoding	Default Character Encoding	
Data Matrix ECI Output	Enabled	
Maxicode		
Maxicode	Disabled	
Maximum Length	150	
Minimum Length	1	
Chinese Sensible Code		
Chinese Sensible Code	Disabled	
Maximum Length	7827	
Minimum Length	1	
Chinese Sensible Twin Code	Single Chinese Sensible Code Only	
Chinese Sensible Code Inverse	Decode Regular Chinese Sensible Barcodes Only	
GM Code		
GM	Disabled	
Maximum Length	2571	
Minimum Length	1	
Code One		
Code One	Disabled	
Maximum Length	3550	
Minimum Length	1	
USPS Postnet		

USPS Postnet	Disabled	
Check Character	Transmit	
USPS Intelligent Mail		
USPS Intelligent Mail	Disabled	
Royal Mail		
Royal Mail	Disabled	
USPS Planet		
USPS Planet	Disabled	
Check Character	Transmit	
KIX Post		
KIX Post	Disabled	
Australian Postal		
Australian Postal	Disabled	
Specific OCR-B		
Specific OCR-B	Disabled	
Passport OCR		
Passport OCR	Disabled	
Data Formatter		
Data Formatter	Disabled	
Non-Match Error Beep	On	
Data Format Selection	Format_0	
Prefix & Suffix		
All Prefixes/Suffixes	Disabled	
Prefix Sequence	Code ID+ Custom +AIM ID	
Custom Prefix	Disabled	
AIM ID Prefix	Disabled	
Code ID Prefix	Disabled	
Custom Suffix	Disabled	
Data Packing	Disable Data Packing	
Terminating Character Suffix	Disabled	

AIM ID Table

Symbology	AIM ID	Possible AIM ID Modifiers (m)
Code 128	]C0	
GS1-128 (UCC/EAN-128)	]C1	
EAN-8	]E4	
EAN-8 with Addon	]E3	
EAN-13	]E0	
EAN-13 with Addon	]E3	
UPC-E	]E0	
UPC-E with Addon	]E3	
UPC-A	]E0	
UPC-A with Addon	]E3	
Interleaved 2 of 5, Febraban	]Im	0, 1, 3
ITF-14	]Im	1, 3
ITF-6	]Im	1, 3
Matrix 2 of 5	]X0	
Code 39	]Am	0, 1, 3, 4, 5, 7
Codabar	]Fm	0, 2, 4
Code 93	]G0	
China Post 25	]X0	
AIM 128	]C2	
ISBT 128	]C4	
ISSN	]X0	
ISBN	]X0	
Industrial 25	]S0	
Standard 25	]R0	
Plessey	]P0	
Code 11	]Hm	0, 1, 3
MSI Plessey	]Mm	0, 1
GS1 Composite	]em	0-3
GS1 Databar （RSS）	]e0	
Code 49	]T0	
Code 16K	]K0	

Symbology	AIM ID	Possible AIM ID Modifiers (m)
PDF417	]Lm	0-2
QR Code	]Qm	0-6
Aztec	]zm	0-9, A-C
Data Matrix	]dm	0-6
Maxicode	]Um	0-3
Chinese Sensible Code	]X0	
GM	]gm	(0~9)
Micro PDF417	]L0	
Micro QR	]Q1	
Code One	]X0	
USPS Postnet	]X0	
USPS Inteligent Mail	]X0	
Royal Mail	]X0	
USPS Planet	]X0	
KIX Post	]X0	
Australian Postal	]X0	
Specific OCR-B	]o2	
Passport OCR	]o2	

Note: “m” represents the AIM modifier character. Refer to ISO/IEC 15424:2008 Information technology – Automatic identification and data capture techniques – Data Carrier Identifiers (including Symbology Identifiers) for AIM modifier character details.

Code ID Table

Symbology	Code ID
Code 128	j
GS1-128 (UCC/EAN-128)	j
EAN-8	d
EAN-13	d
UPC-E	c
UPC-A	c
Interleaved 2 of 5, Febraban	e
ITF-14	e
ITF-6	e
Matrix 2 of 5	v
Code 39	b
Codabar	a
Code 93	i
China Post 25	X
AIM 128	X
ISBT 128	X
ISSN	g
ISBN	B
Industrial 25	I
Standard 25	f
Plessey	n
Code 11	H
MSI Plessey	m
GS1 Composite	y
GS1 Databar (RSS)	R
Code 49	X
Code 16K	X
PDF417	r
QR Code	s
Aztec	z
Data Matrix	u

Symbology	Code ID
MaxiCode	x
Chinese Sensible Code	h
GM Code	x
Micro PDF417	R
Micro QR	X
Code One	X
USPS Postnet	P
USPS Inteligent Mail	M
Royal Mail	x
USPS Planet	L
KIX Post	K
Australian Postal	A
Specific OCR-B	S
Passport OCR	O

Symbology ID Number

Symbology	ID Number
Code 128	002
GS1-128 (UCC/EAN-128)	003
EAN-8	004
EAN-13	005
UPC-E	006
UPC-A	007
Interleaved 2 of 5, Febraban	008
ITF-14	009
ITF-6	010
Matrix 2 of 5	011
Code 39	013
Codabar	015
Code 93	017
China Post 25	019
AIM 128	020
ISBT 128	021
ISSN	023
ISBN	024
Industrial 25	025
Standard 25	026
Plessey	027
Code11	028
MSI-Plessey	029
GS1 Composite	030
GS1 Databar (RSS)	031
PDF417	032
QR Code	033
Aztec	034
Data Matrix	035
Maxicode	036
Chinese Sensible Code	039
GM Code	040

Symbology	ID Number
Micro PDF417	042
Micro QR	043
Code One	048
Specific OCR-B	064
Passport OCR	066
USPS Postnet	096
USPS Inteligent Mail	097
Royal Mail	098
USPS Planet	099
KIX Post	100
Australian Postal	101

ASCII Table

Hex	Dec	Char
00	0	NUL (Null char.)
01	1	SOH (Start of Header)
02	2	STX (Start of Text)
03	3	ETX (End of Text)
04	4	EOT (End of Transmission)
05	5	ENQ (Enquiry)
06	6	ACK (Acknowledgment)
07	7	BEL (Bell)
08	8	BS (Backspace)
09	9	HT (Horizontal Tab)
0a	10	LF (Line Feed)
0b	11	VT (Vertical Tab)
0c	12	FF (Form Feed)
0d	13	CR (Carriage Return)
0e	14	SO (Shift Out)
0f	15	SI (Shift In)
10	16	DLE (Data Link Escape)
11	17	DC1 (XON) (Device Control 1)
12	18	DC2 (Device Control 2)
13	19	DC3 (XOFF) (Device Control 3)
14	20	DC4 (Device Control 4)
15	21	NAK (Negative Acknowledgment)
16	22	SYN (Synchronous Idle)
17	23	ETB (End of Trans. Block)
18	24	CAN (Cancel)
19	25	EM (End of Medium)
1a	26	SUB (Substitute)
1b	27	ESC (Escape)
1c	28	FS (File Separator)
1d	29	GS (Group Separator)

Hex	Dec	Char
1e	30	RS (Request to Send)
1f	31	US (Unit Separator)
20	32	SP (Space)
21	33	! (Exclamation Mark)
22	34	" (Double Quote)
23	35	# (Number Sign)
24	36	$ (Dollar Sign)
25	37	% (Percent)
26	38	& (Ampersand)
27	39	` (Single Quote)
28	40	((Left/ Opening Parenthesis)
29	41	) (Right/ Closing Parenthesis)
2a	42	* (Asterisk)
2b	43	+ (Plus)
2c	44	, (Comma)
2d	45	- (Minus/ Dash)
2e	46	. (Dot)
2f	47	/ (Forward Slash)
30	48	0
31	49	1
32	50	2
33	51	3
34	52	4
35	53	5
36	54	6
37	55	7
38	56	8
39	57	9
3a	58	: (Colon)
3b	59	; (Semi-colon)
3c	60	< (Less Than)
3d	61	= (Equal Sign)

Hex	Dec	Char
3e	62	> (Greater Than)
3f	63	? (Question Mark)
40	64	@ (AT Symbol)
41	65	A
42	66	B
43	67	C
44	68	D
45	69	E
46	70	F
47	71	G
48	72	H
49	73	I
4a	74	J
4b	75	K
4c	76	L
4d	77	M
4e	78	N
4f	79	O
50	80	P
51	81	Q
52	82	R
53	83	S
54	84	T
55	85	U
56	86	V
57	87	W
58	88	X
59	89	Y
5a	90	Z
5b	91	[(Left/ Opening Bracket)
5c	92	\ (Back Slash)
5d	93	] (Right/ Closing Bracket)

Hex	Dec	Char
5e	94	^ (Caret/ Circumflex)
5f	95	_ (Underscore)
60	96	' (Grave Accent)
61	97	a
62	98	b
63	99	c
64	100	d
65	101	e
66	102	f
67	103	g
68	104	h
69	105	i
6a	106	j
6b	107	k
6c	108	l
6d	109	m
6e	110	n
6f	111	o
70	112	p
71	113	q
72	114	r
73	115	s
74	116	t
75	117	u
76	118	v
77	119	w
78	120	x
79	121	y
7a	122	z
7b	123	{ (Left/ Opening Brace)
7c	124	| (Vertical Bar)
7d	125	} (Right/ Closing Brace)
7e	126	~ (Tilde)
7f	127	DEL (Delete)

Unicode Key Maps

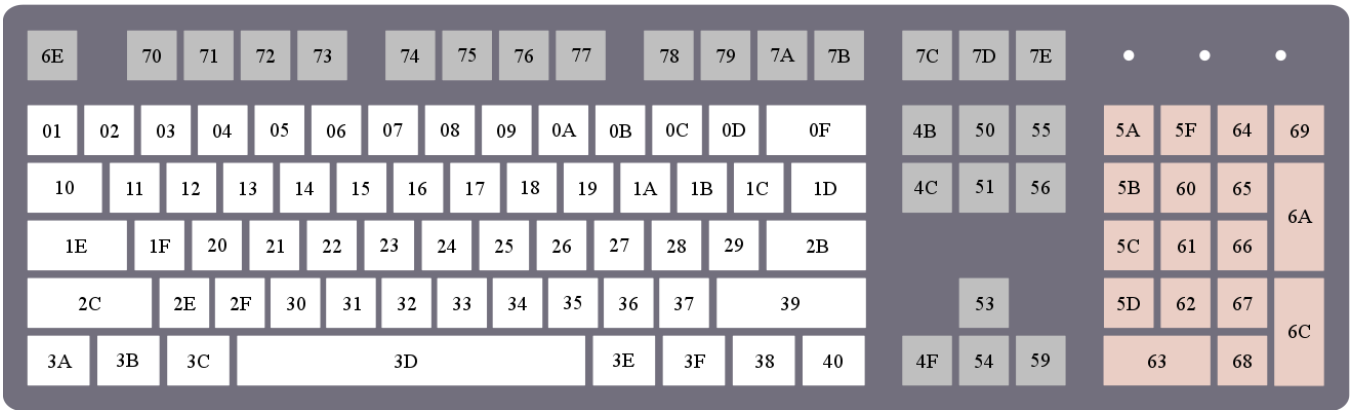

104 Key U.S. Style Keyboard

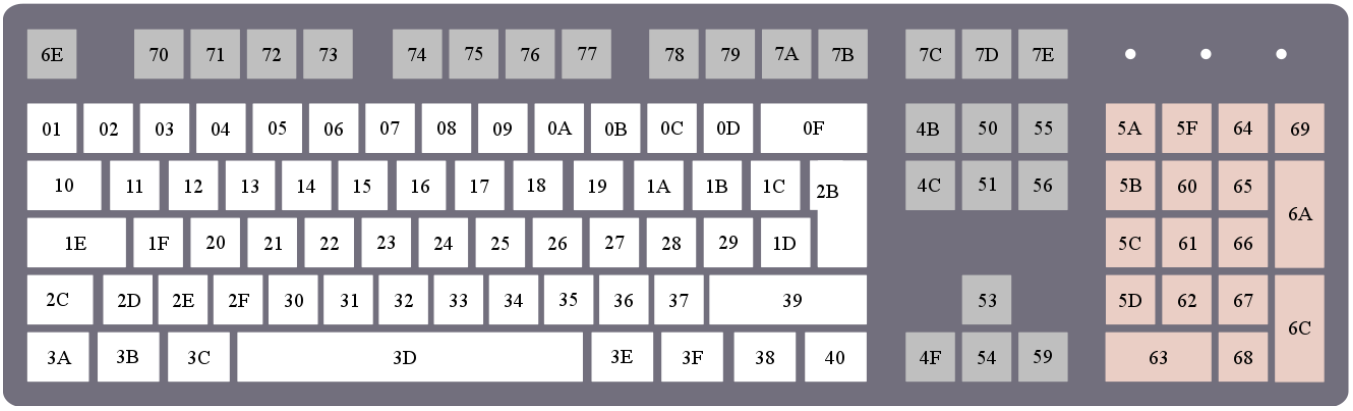

105 Key European Style Keyboard

FCC Warning

This device complies with part 15 of the FCC rules. Operation is subject to the following two conditions: (1) this device may not cause harmful interference, and (2) this device must accept any inte rference received, including interference that may cause undesired operation.

Changes or modifications not expressly approved by the party responsible for compliance could void the user's authority to operate the equipment.

NOTE: This equipment has been tested and found to comply with the limits for a Class B digital device, pursuant to part 15 of the FCC Rules. These limits are designed to provide reasonable protection against harmful interference in a residential installation. This equipment generates uses and can radiate radio frequency energy and, if not installed and used in accordance with the instructions, may cause harmful interference to radio communications. However, there is no guarantee that interference will not occur in a particular installation. If this equipment does cause harmful interferenceto radio or television reception, which can be determined by turning the equipment off and on, the user is encouraged to try to correct the interference by one or more of the following measures:

- Reorient or relocate the receiving antenna.
- Increase the separation between the equipment and receiver.
- Connect the equipment into an outlet on a circuit different from that to which the receiver is connected.
- Consult the dealer or an experienced radio/TV technician for help.

Radiation Exposure Statement

This equipment complies with FCC radiation exposure limits set forth for an uncontrolled environment.