Marking Code 說明： (料件上之 Marking 須有適當的說明；若 IC 有版本區分，需標示其位置)
Marking Code Description：(The detail description of the marking of parts is necessary. If the ICs have different version please specify it in marking)

尺寸檢驗紀錄 Dimension Checklist

尺寸(含公差) Dimension(With Tolerance)
(請貼上承認量測尺寸圖，含公差；機殼類除外)Apart from chassis class, please attach the recognized dimensions / measurement diagram (tolerance is included)

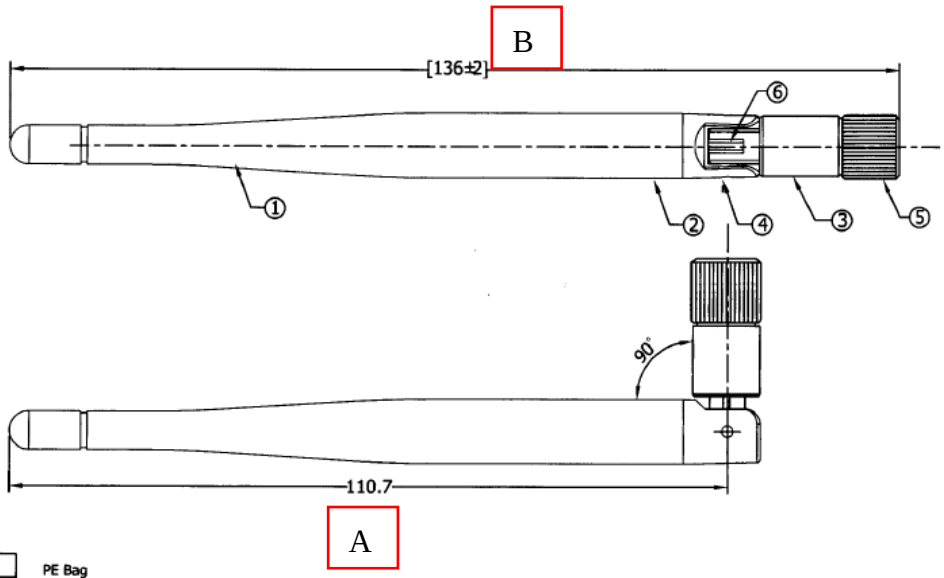

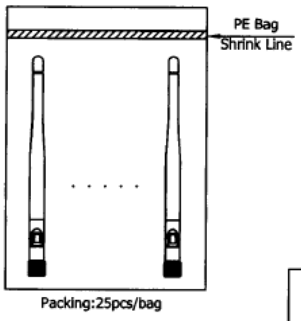

NO	DESCRIPTION	
6	Cable	RG-178,Transparency Brown,50Ω
5	Connector	SMA Straight Plug Reverse
4	Rivet	POM,Color:Black
3	Antenna Base	(CD-348)PC+PBT,Color:Black
2	Antenna Base	(CD-418)PC,Color:Black
1	Antenna Body	(CD-417)TPE,Color:Black

XX.	±5.0	APPROVED 何四春 2017.02.17	CUSTOMER:	Moxa
X.	±3.0		PART NO :	1710010100215
.X	±1.0	CHECKED	PART NAME:	RF Antenna Assembly
.XX	±0.5		W.Y P/NO :	C1918-510002-A
.XXX	±0.1	DRAWING 熊伊	REV / UNIT / FILE :	SRF2017136

CUSTOMER'S SINGATURE

M.gear

THIS DRAWING, AND IT'S INHER
ARE THE PROPERTY OF WHA YU.
BE COPIED, REPRODUCED, OR GI
WITHOUT THE WRITTEN CO

Mechanism size Check/Compare, Unit : mm

項次 Item	圖面位置 Drawing Location	檢驗項目 Inspection Item	實測 1 Inspection Results1	實測 2 Inspection Results2	實測 3 Inspection Results3	實測 4 Inspection Results4
1	**A**	110.7mm	110.68			
2	**B**	136±2mm	136.32			
3						
4						
5						

其它 Others

檢驗及其它注意事項 Inspection and others shall be noted

Issued by QMD
MOXA®
2017/07/25 10:31

ANT-WDB-ARM-0202 Series

Dual-band omni-directional, 2/2 dBi, RP-SMA (male) antennas

Features and Benefits

- Small size for easy installation
- Lightweight for portable deployment
- Tilt and swivel design
- Flexible installation
- RP-SMA-type (male) connector

Introduction

The ANT-WDB-ARM-0202 is an omni-directional lightweight compact dual-band indoor antenna with RP-SMA (male) connectors. The antenna provides a gain of 2/2 dBi and is designed to operate in temperatures from -40 to 75°C.

Field Patterns

Frequency: 2.4 GHz

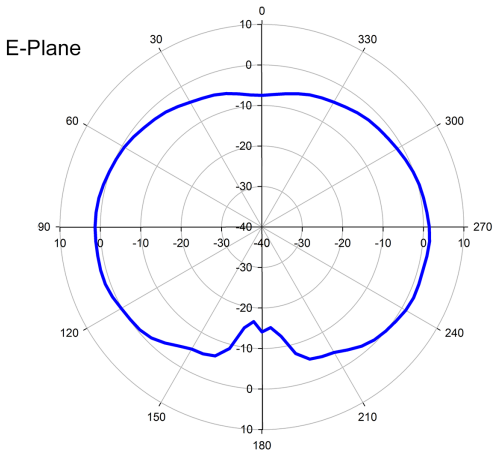

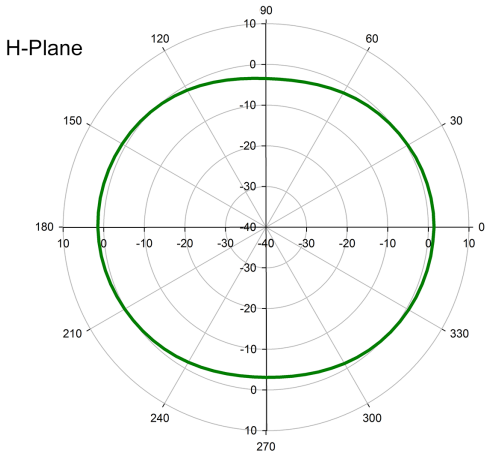

Frequency: 5 GHz

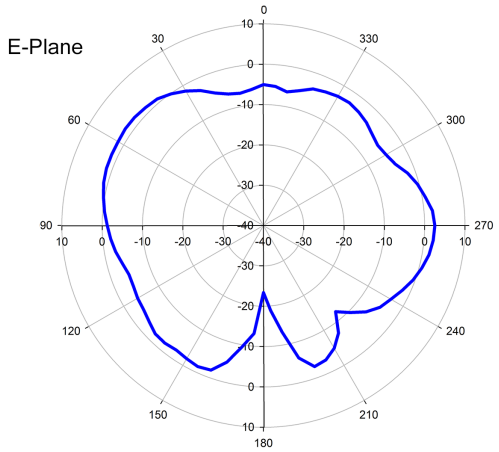

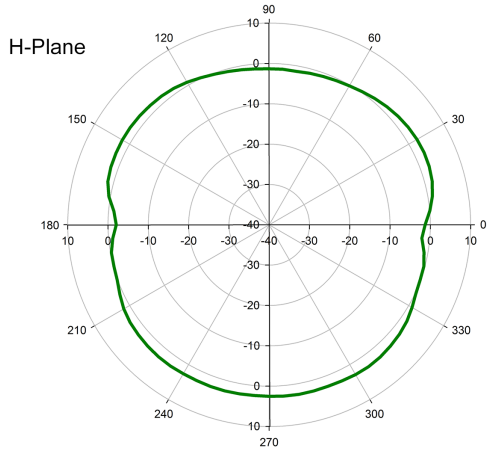

Specifications

Antenna Characteristics

Frequency	2.4 to 2.5, 4.9 to 5.825 GHz
Antenna Type	Omni-directional
Typical Antenna Gain	2/2 dBi
Connector	RP-SMA (male)
Impedance	50 ohms
Polarization	Linear
HPBW/Horizontal	360°
V.S.W.R.	2:1 max.
Power Handling	1 W (max.)

Physical Characteristics

Weight	9.65 g (0.02 lb)
Length	136 mm (5.35 in)
Radome Color	Black
Radome Material	Plastic
Installation	Straight mount

Environmental Limits

Operating Temperature	-40 to 75°C (-40 to 167°F)
Storage Temperature (package included)	-40 to 75°C (-40 to 167°F)
Ambient Relative Humidity	5 to 95% (30°C, non-condensing)

Warranty

Warranty Period	1 year
Details	See www.moxa.com/warranty

Dimensions

Unit: mm

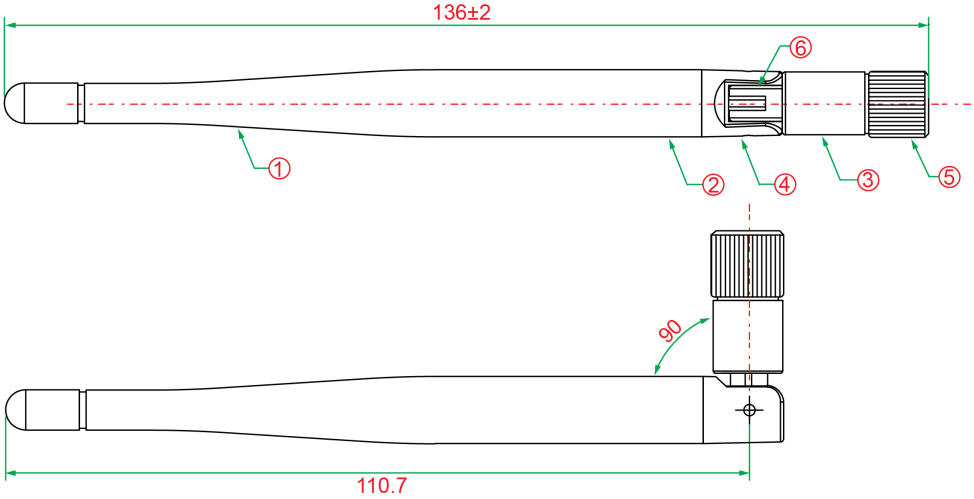

Ordering Information

Model Name	Frequency	Antenna Type	Antenna Gain	Connector
ANT-WDB-ARM-0202	2.4 to 2.5, 4.9 to 5.825 GHz	Omni-directional	2/2 dBi	RP-SMA (male)

© Moxa Inc. All rights reserved. Updated Jan 09, 2019.

This document and any portion thereof may not be reproduced or used in any manner whatsoever without the express written permission of Moxa Inc. Product specifications subject to change without notice. Visit our website for the most up-to-date product information.

華裕實業股份有限公司
WHA YU INDUSTRIAL CO., LTD

RoHS 排外條款說明
RoHS Exclusive item Hazardous Substance

本公司保證，本產品均屬環保產品，皆符合 RoHS 法規要求，並適用於 RoHS 規定之排除條款。
We hereby confirm and assure that all parts and sub-materials delivered to your company comply with RoHS Standard and apply to RoHS Exclusive item.

RoHS 合金類排除條款要求如下：
RoHS Exclusive item ：

合金種類 alloys item	鉛允許含量(ppm) Lead acceptance concentration
鋼材 steel	**<3,500ppm**
鋁合金 aluminum alloys	**<4,000ppm**
銅合金 copper alloys	**<40,000ppm**
焊錫 solder	**<1,000ppm**

立承諾書人

公司名稱：華裕實業股份有限公司
company name:WHA YU INDUSTRIAL CO., LTD

公司地址：新竹市公道五路二段 326 號
company address:No.326. Sec 2. Kung Tao 5 Road. Hsin Chu City, Taiwan

聯絡電話：03-5714225
TEL: +886-3-5714225

負責人：林祺生 董事長
sign by

立約日期：西元 2006 年 9 月 05 日
Date: 2006. 09. 05

Issued by QMD
MOXA
2017/07/25 10:31