Testing Laboratory
3023

Test Report No:
24C0886R-RFUSV03S-A

TEST REPORT
FCC Rules & Regulations

Product Name	Industrial Wireless Access Point/Client
Brand Name	MOXA
Model No.	TAP-M310RXXXXXXXXXXXXXXXXXXXXXXXX (X= 0-9, A-Z, blank, dash or any character for marketing purpose)
FCC ID	SLE-TAP-M310R-NPS
Applicant´s Name / Address	Moxa Inc. No. 1111, Heping Rd., Bade Dist., Taoyuan City 334004, Taiwan
Manufacturer's Name	Moxa Inc.
Test Method Requested, Standard	FCC CFR Title 47 Part 15 Subpart E Section 15.407 ANSI C63.10-2013
Verdict Summary	IN COMPLIANCE
Documented By Jinn Chen	Jinn Chen
Tested By Bill Lin	Bill Lin
Approved By Steven Tsai	Steven Tsai
Date of Receipt	2024/12/26
Date of Issue	2025/04/01
Report Version	V1.0

INDEX

page

Competences and Guarantees....4
General Conditions....4
Revision History....5
Summary of Test Result....6
1. General Information....7
1.1. EUT Description....7
1.2. EUT Information....8
1.3. Testing Location Information....8
1.4. Measurement Uncertainty....9
1.5. List of Test Equipment....10
2. Test Configuration of EUT....11
2.1. Test Condition....11
2.2. Test Frequency Mode....11
2.3. Duty Cycle....12
2.4. Measurement Configuration....13
2.5. Tested System Details....14
2.6. Configuration of Tested System....14
2.7. EUT Operating Procedures....14
3. AC Power Line Conducted Emission....15
3.1. Test Setup....15
3.2. Test Limit....15
3.3. Test Procedure....15
3.4. Test Result of AC Power Line Conducted Emission....15
4. Emission Bandwidth....16
4.1. Test Setup....16
4.2. Test Limit....16
4.3. Test Procedure....16
4.4. Test Result of Emission Bandwidth....16
5. Maximum Conducted Output Power....17
5.1. Test Setup....17
5.2. Test Limit....17
5.3. Test Procedure....18
5.4. Test Result of Maximum Conducted Output Power....18
6. Maximum Power Spectral Density....19
6.1. Test Setup....19
6.2. Test Limit....19
6.3. Test Procedure....19

6.4. Test Result of Maximum Power Spectral Density 19
7. Transmitter Radiated Spurious Emission 20
7.1. Test Setup 20
7.2. Test Limit 21
7.3. Test Procedure 22
7.4. Test Result of Transmitter Radiated Spurious Emission 22
Appendix A. Test Result of AC Power Line Conducted Emission
Appendix B. Test Result of Emission Bandwidth
Appendix C. Test Result of Maximum Conducted Output Power
Appendix D. Test Result of Maximum Power Spectral Density
Appendix E. Test Result of Transmitter Radiated Spurious Emission
Appendix F. Test Result of Transmitter Radiated Spurious Emission Co-location
Appendix G. Test Setup Photograph

Competences and Guarantees

DEKRA is a testing laboratory competent to carry out the tests described in this report.
In order to assure the traceability to other national and international laboratories, DEKRA has a calibration and maintenance program for its measurement equipment.

DEKRA guarantees the reliability of the data presented in this report, which is the result of the measurements and the tests performed to the item under test on the date and under the conditions stated in the report and it is based on the knowledge and technical facilities available at DEKRA at the time of performance of the test.

DEKRA is liable to the client for the maintenance of the confidentiality of all information related to the item under test and the results of the test.

The results presented in this Test Report apply only to the particular item under test established in this document.

IMPORTANT: No parts of this report may be reproduced or quoted out of context, in any form or by any means, except in full, without the previous written permission of DEKRA.

General Conditions

1. The test results relate only to the samples tested.
2. The test results shown in the test report are traceable to the national/international standard through the calibration report of the equipment and evaluated measurement uncertainty herein.
3. This report must not be used to claim product endorsement by TAF or any agency of the government.
4. The test report shall not be reproduced without the written approval of DEKRA Testing and Certification Co., Ltd.
5. Measurement uncertainties evaluated for each testing system and associated connections are given here to provide the system information for reference. Compliance determinations do not take into account measurement uncertainties for each testing system, but are based on the results of the compliance measurement.

Revision History

Version	Description	Issued Date
V1.0	Initial issue of report	2025/04/01

Summary of Test Result

Report Clause	Test Items	Result (PASS/FAIL)	Remark
3	AC Power Line Conducted Emission	PASS	-
4	Emission Bandwidth	PASS	-
5	Maximum Conducted Output Power	PASS	-
6	Maximum Power Spectral Density	PASS	-
7	Transmitter Radiated Spurious Emission	PASS	-

Comments and Explanations
The declared of product specification for EUT presented in the report are provided by the manufacturer, and the manufacturer takes all the responsibilities for the accuracy of product specification.

1. General Information

1.1. EUT Description

Frequency Range	5150 ~ 5250 MHz 5725 ~ 5850 MHz	
Operating Frequency / Channel Number	IEEE 802.11a/n/ac/ax (20 MHz)	5180 ~ 5240 MHz / 4 Channels 5745 ~ 5825 MHz / 5 Channels
	IEEE 802.11n/ac/ax (40 MHz)	5190 ~ 5230 MHz / 2 Channels 5755 ~ 5795 MHz / 2 Channels
	IEEE 802.11ac/ax (80 MHz)	5210 MHz / 1 Channel 5775 MHz / 1 Channel
Type of Modulation	IEEE 802.11a/n	OFDM-BPSK, QPSK, 16QAM, 64QAM
	IEEE 802.11ac	OFDM-BPSK, QPSK, 16QAM, 64QAM, 256QAM
	IEEE 802.11ax	OFDMA-BPSK, QPSK, 16QAM, 64QAM, 256QAM, 1024QAM

The difference for each model is shown as below:

Model No.	Description
TAP-M310R-NPS-1R-US-CT-T	Wi-Fi 6 railway onboard AP/client with one radio module, no power splitters, one M12 A-coded 24 VDC input, US band, -40 to 75°C operating temperature, conformal coating
TAP-M310R-NPS-1P1R-US-CT-T	Wi-Fi 6 railway onboard AP/client with one radio module, no power splitters, one M12 K-coded 24 to 110 VDC input, US band, -40 to 75°C operating temperature, conformal coating

From the above models, model: TAP-M310R-NPS-1P1R-US-CT-T was selected as representative model for the test and its data was recorded in this report.

Antenna Information					
Item	Brand Name	Model No.	Type	Antenna Gain (dBi)	
1	MOXA	ANT-WDB-PNF-1011	Panel	U-NII 1	12.04
				U-NII 3	10.82
2	MOXA	ANT-WSB5-PNF-16	Panel	U-NII 1	16.38
				U-NII 3	16.94

Directional Gain (dBi)	
U-NII 1	U-NII 3
19.39	19.95

Note:

1. The antenna of EUT conforms to FCC 15.203.
2. For IEEE 802.11a/n/ac/ax Mode: (2TX, 2RX)
   All of the antenna No. can be used as transmitting/receiving antennas.

1.2. EUT Information

EUT Power Type	From DC 24-110V			
EUT Function	☒	IP Based (Load Based)	☐	Frame Based
	☒	Point-to-multipoint	☐	Point-to-point
TPC Function	☐	With TPC Function	☒	Without TPC Function
Weather Band (5600 ~ 5650 MHz)	☐	With 5600 ~ 5650 MHz	☒	Without 5600 ~ 5650 MHz
Beamforming Function	☐	With beamforming	☒	Without beamforming
Resource Unit of 802.11ax	☒	Full RU	☐	Partial RU

1.3. Testing Location Information

USA	FCC Designation Number: TW0033
Canada	CAB Identifier Number: TW3023 / Company Number: 26930

Site Description	Accredited by TAF
	Accredited Number: 3023

Test Laboratory	DEKRA Testing and Certification Co., Ltd.
	Linkou Laboratory
Address	No.5-22, Ruishukeng Linkou District, New Taipei City, 24451, Taiwan, R.O.C.
Performed Location	No. 26, Huaya 1st Rd., Guishan Dist.,Taoyuan City 333411, Taiwan, R.O.C.
Phone Number	+886-3-275-7255
Fax Number	+886-3-327-8031

Ambient conditions in the laboratory:

Performed Item	Items	Required	Actual	Test Date
AC Power Line Conducted Emission	Temperature (°C)	10~40 °C	23.4 °C	2025/01/17
	Humidity (%RH)	10~90 %	59.8 %	
Radiated Emission	Temperature (°C)	10~40 °C	20.3 °C	2025/01/11~2025/01/13
	Humidity (%RH)	10~90 %	61.5 %	
RF Conducted Emission	Temperature (°C)	10~40 °C	22.3 °C	2024/12/30~2025/01/03
	Humidity (%RH)	10~90 %	60.1 %	

1.4. Measurement Uncertainty

Uncertainties have been calculated according to the DEKRA internal document.

The reported expanded uncertainties are based on a standard uncertainty multiplied by a coverage factor of k=2, providing a level of confidence of approximately 95%.

Measurement uncertainties evaluated for each testing system and associated connections are given here to provide the system information for reference. Compliance determinations do not take into account measurement uncertainties for each testing system, but are based on the results of the compliance measurement.

Test item	Uncertainty
AC Power Line Conducted Emission	±3.50 dB
Emission Bandwidth	±1580.61 Hz
Maximum Conducted Output Power	Spectrum Analyzer: ±2.13 dB Power Meter: ±1.07 dB
Maximum Power Spectral Density	±2.13 dB
Transmitter Radiated Spurious Emission	9 kHz~30 MHz: ±3.30 dB 30 MHz~1 GHz: ±4.79 dB 1 GHz~18 GHz: ±4.17 dB 18 GHz~40 GHz: ±3.32 dB
Duty Cycle	±0.51 %

1.5. List of Test Equipment

For Conduction Measurements / HY-SR01

	Equipment	Manufacturer	Model No.	Serial No.	Cal. Date	Due Date
V	EMI Test Receiver	R&S	ESR7	101601	2024/06/24	2025/06/23
V	Two-Line V-Network	R&S	ENV216	101306	2024/04/01	2026/03/31
V	Two-Line V-Network	R&S	ENV216	101307	2023/08/17	2025/08/16
V	Coaxial Cable	SUHNER	RG400_BNC	RF001	2025/01/10	2026/01/09

Note:
1. Two-Line V-Network is calibrated every two years, the other equipment is calibrated every year.
2. The test instruments marked with “V” are used to measure the final test results.
3. Test Software Version: e3 230303 dekra V9.

For Conducted Measurements / HY-SR02

	Equipment	Manufacturer	Model No.	Serial No.	Cal. Date	Due Date
V	Spectrum Analyzer	R&S	FSV30	103466	2024/12/18	2025/12/17
V	Spectrum Analyzer	KEYSIGHT	N9010A	MY53470892	2024/10/30	2025/10/29
V	Peak Power Analyzer	KEYSIGHT	8990B	MY51000539	2024/05/07	2025/05/06
V	Wideband Power Sensor	KEYSIGHT	N1923A	MY59240002	2024/05/08	2025/05/07
V	Wideband Power Sensor	KEYSIGHT	N1923A	MY59240003	2024/05/08	2025/05/07

Note:
1. All equipment is calibrated every year.
2. The test instruments marked with “V” are used to measure the final test results.
3. Test Software Version: DTC_RF_Tool_Release V100

For Radiated Measurements /HY-CB02

	Equipment	Manufacturer	Model No.	Serial No.	Cal. Date	Due. Date
V	Loop Antenna	TESEQ	HLA6121	49611	2024/02/23	2025/02/22
V	Bi-Log Antenna	SCHWARZBECK	VULB9168	9168-0675	2023/08/09	2025/08/08
V	Horn Antenna	RF SPIN	DRH18-E	210503A18ES	2024/02/29	2025/02/28
V	Horn Antenna	Com-Power	AH-840	101101	2023/12/04	2025/12/03
V	Pre-Amplifier	SGH	SGH0301-9	20211007-10	2025/01/10	2026/01/09
V	Pre-Amplifier	SGH	SGH118-HS	20211102-1	2025/01/10	2026/01/09
V	Pre-Amplifier	EMCI	EMC05820SE	980285	2025/01/10	2026/01/09
	Pre-Amplifier	MICZEN	MZLNA1850GAC40	WB0103001	2025/01/10	2026/01/09
V	Pre-Amplifier	EMCI	EMC184045SE	980369	2025/01/10	2026/01/09
V	Coaxial Cable	EMCI	EMC102-KM-KM-600	1160311	2025/01/10	2026/01/09
V	Coaxial Cable	EMCI	EMC102-KM-KM-7000	170242	2025/01/10	2026/01/09
	Filter	MICRO TRONICS	BRM20887	G002	2025/01/05	2026/01/04
V	Filter	MICRO TRONICS	BRM50716	066	2025/01/05	2026/01/04
V	EMI Test Receiver	R&S	ESR3	102793	2024/12/06	2025/12/05
V	Spectrum Analyzer	R&S	FSV3044	101113	2024/02/05	2025/02/04
V	Coaxial Cable	SGH	HA800	GD20110223-2	2025/01/10	2026/01/09
V	Coaxial Cable	SGH	HA800	GD20110222-4	2025/01/10	2026/01/09
V	Coaxial Cable	SGH	SGH18	202108-5	2025/01/10	2026/01/09
V	Coaxial Cable	SGH	SGH18	202212-2	2025/01/10	2026/01/09

Note:
1. Bi-Log Antenna and Horn Antenna (AH-840) are calibrated every two years, the other equipment is calibrated every year.
2. The test instruments marked with “V” are used to measure the final test results.
3. Test Software Version: e3 230303 dekra V9.

2. Test Configuration of EUT

2.1. Test Condition

EUT Operational Condition	
Testing Voltage	DC 24V by DC Power Supply

2.2. Test Frequency Mode

Test Software Version	QSPR / Version 5.0-00197

Modulation	Frequency (MHz)	Power Setting	
		Master	Slave
802.11a (20 MHz)	5180	12	6
	5220	12	6.5
	5240	12	6
	5745	15	
	5785	15	
	5825	15	
802.11ax (20 MHz)	5180	13.5	7
	5220	13.5	7.5
	5240	13	7
	5745	15.5	
	5785	15.5	
	5825	16	
802.11ax (40 MHz)	5190	14	10
	5230	14	9.5
	5755	15.5	
	5795	15.5	
802.11ax (80 MHz)	5210	15.5	9.5
	5775	15	

2.3. Duty Cycle

Modulation	On Time (ms)	On+Off Time (ms)	Duty Cycle (%)	Duty Factor (dB)	1/T Minimum VBW (Hz)
802.11a (20 MHz)	1.9600	2.0700	94.69	0.24	1000
802.11ax (20 MHz)	5.3800	5.5600	96.76	0.14	200
802.11ax (40 MHz)	5.3400	5.5200	96.74	0.14	200
802.11ax (80 MHz)	3.9600	4.1800	94.74	0.23	300

802.11a (20 MHz)

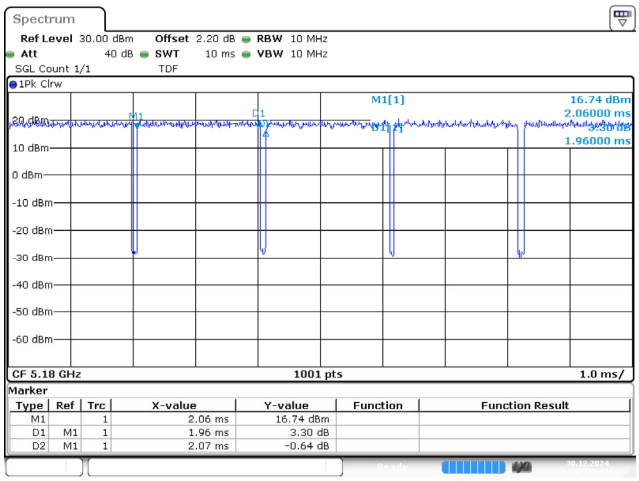

802.11ax (20 MHz)

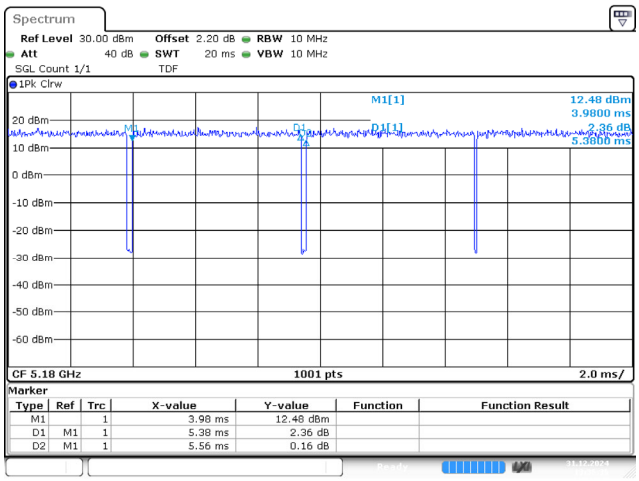

802.11ax (40 MHz)

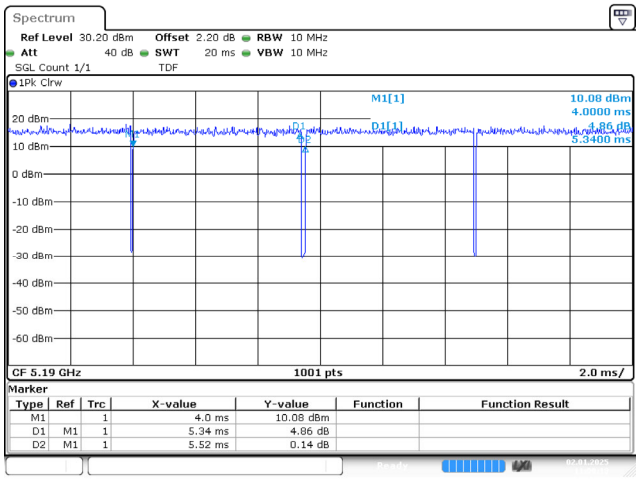

802.11ax (80 MHz)

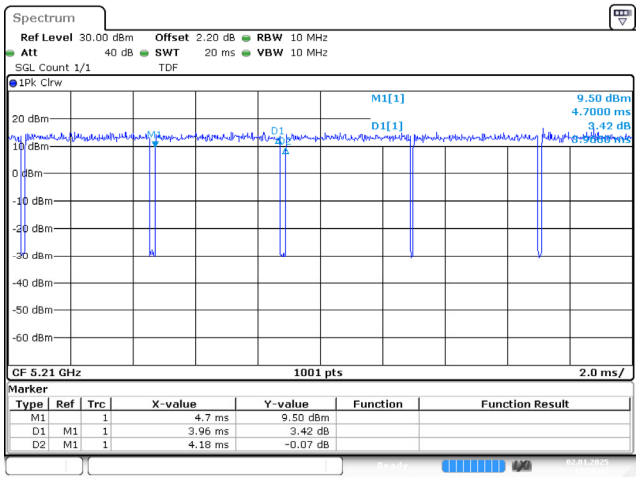

2.4. Measurement Configuration

Test Mode	Mode 1 (Transmit)	802.11a (20 MHz)
		802.11ax (20 MHz)
		802.11ax (40 MHz)
		802.11ax (80 MHz)

Note:

1. Determining compliance shall be based on the results of the compliance measurement, without taking measurement instrumentation uncertainty into account.
2. For radiated emissions below 1 GHz and AC power line conducted emissions, all modes of operation were investigated, and the worst-case emissions are reported.
3. The lowest data rates are tested in each mode. Only the worst case is shown in the report. (802.11a is 6Mbps, 802.11ax is MCS0)

2.5. Tested System Details

No.	Equipment	Brand Name	Model No.	Serial No.	Power Cord
1	DC POWER SUPPLY	KEYSIGHT	E36234A	MY59001234	Non-Shielded, 1.8m
2	Notebook PC	DELL	Latitude 5501	4H94P13	N/A

2.6. Configuration of Tested System

Connection Diagram

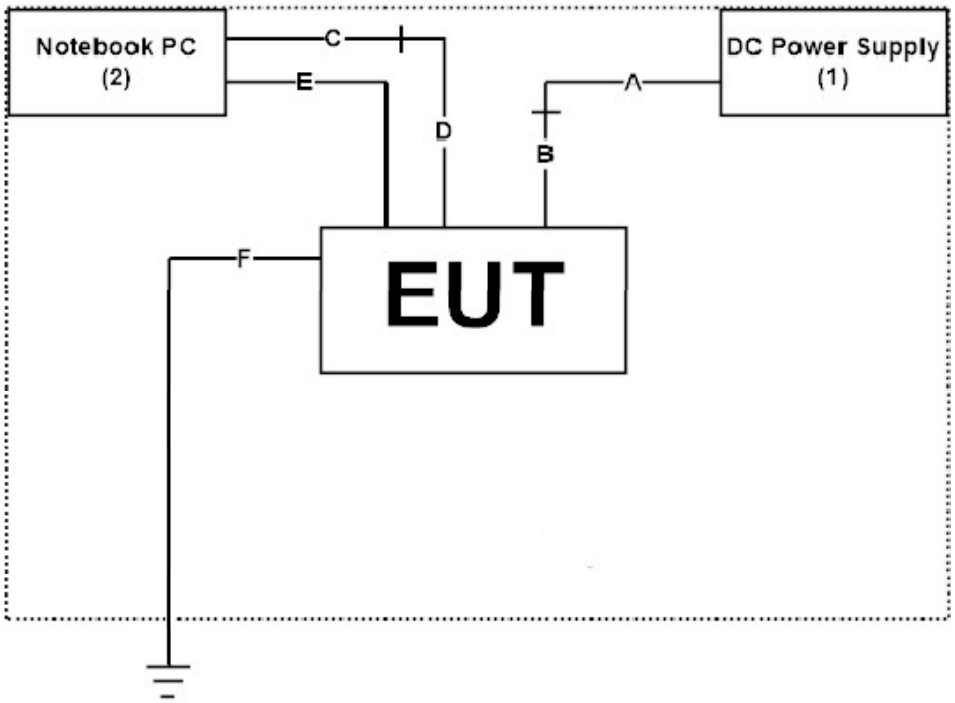

Signal Cable Type		Signal cable Description
A	Power Cable	Non-Shielded, 1 m
B	Power Cable (For TAP-M310R-NPS-1P1R-US-CT-T)	Non-Shielded, 1.6 m
	Power Cable (For TAP-M310R-NPS-1R-US-CT-T)	Non-Shielded, 0.3 m
C	RS-232/422/485 USB-to-serial Adaptor	Non-Shielded, 0.8 m
D	M12(5pin) to RS-232 Cable Console cable	Shielded, 1.6 m
E	M12 to LAN Cable	Shielded, 2 m
F	GND Cable	Shielded, 2 m

2.7. EUT Operating Procedures

1	Setup the EUT as shown in Section 2.6.
2	Execute software “QSPR / Version 5.0-00197” on the Notebook PC.
3	Configure the test mode, the test channel, and the data rate.
4	Verify that the EUT works properly.

3. AC Power Line Conducted Emission

3.1. Test Setup

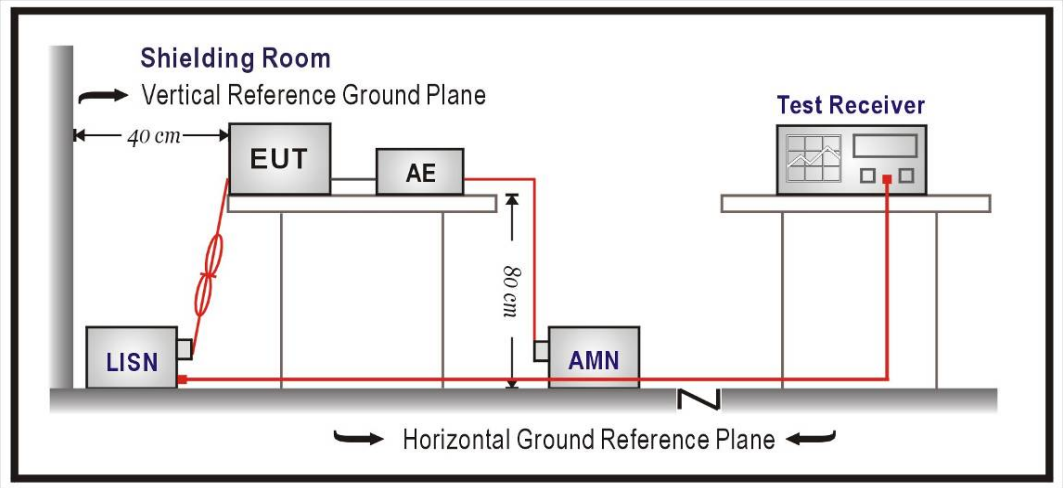

3.2. Test Limit

Frequency (MHz)	QP (dBμV)	AV (dBμV)
0.15 - 0.50	66 - 56	56 - 46
0.50 - 5.0	56	46
5.0 - 30	60	50

Remark: In the above table, the tighter limit applies at the band edges.

3.3. Test Procedure

The EUT was setup according to ANSI C63.10: 2013 for AC Power Line Conducted Emissions.

3.4. Test Result of AC Power Line Conducted Emission

Refer as Appendix A

4. Emission Bandwidth

4.1. Test Setup

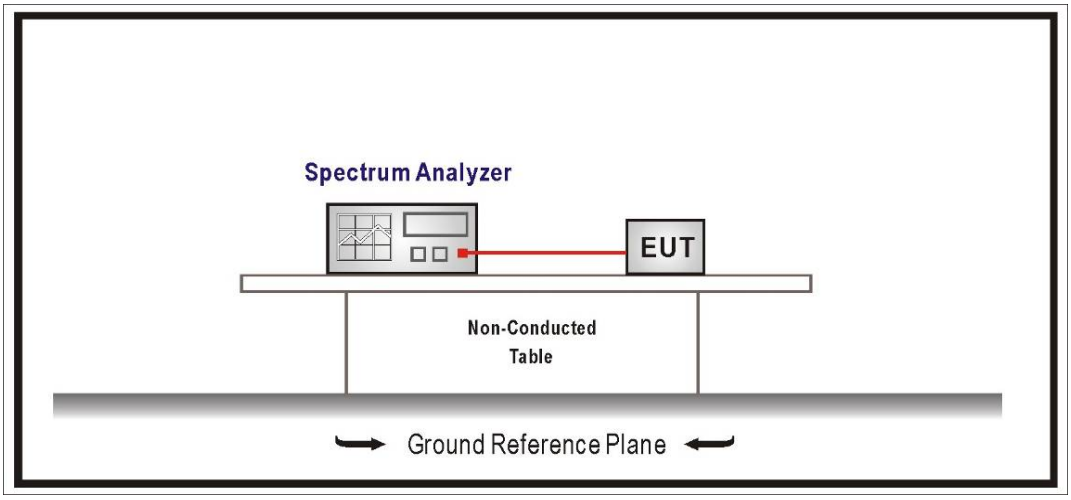

4.2. Test Limit

26 dB Bandwidth : No Required

6 dB Bandwidth ≧ 500kHz

4.3. Test Procedure

26 dB Bandwidth, 99% Occupied Bandwidth :

The EUT was tested according to U-NII test procedure of KDB 789033.

Set RBW 1% of the emission bandwidth, VBW equal to 3 times the RBW.

6 dB Bandwidth :

Set RBW = 100kHz, VBW≧3xRBW, Sweep time=Auto, Set Peak detector.

4.4. Test Result of Emission Bandwidth

Refer as Appendix B

5. Maximum Conducted Output Power

5.1. Test Setup

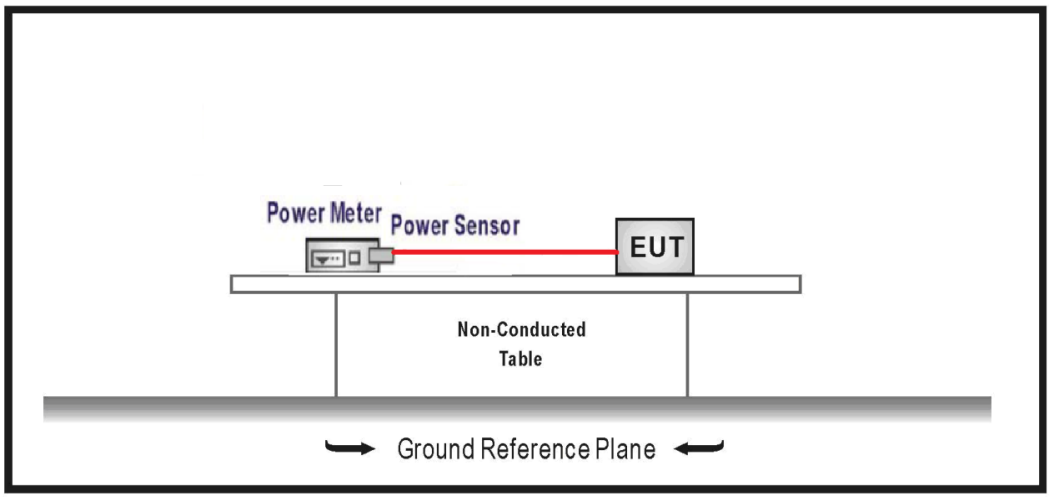

5.2. Test Limit

1. For an outdoor access point and an indoor access point operating in the band 5.15-5.25 GHz, the maximum conducted output power over the frequency band of operation shall not exceed 1 W provided the maximum antenna gain does not exceed 6 dBi. If transmitting antennas of directional gain greater than 6 dBi are used, both the maximum conducted output power and the maximum power spectral density shall be reduced by the amount in dB that the directional gain of the antenna exceeds 6 dBi. For client devices in the 5.15-5.25 GHz band, the maximum conducted output power over the frequency band of operation shall not exceed 250 mW provided the maximum antenna gain does not exceed 6 dBi. If transmitting antennas of directional gain greater than 6 dBi are used, both the maximum conducted output power and the maximum power spectral density shall be reduced by the amount in dB that the directional gain of the antenna exceeds 6 dBi.
2. For the 5.25-5.35 GHz and 5.47-5.725 GHz bands, the maximum conducted output power over the frequency bands of operation shall not exceed the lesser of 250 mW or 11 dBm + 10 log B, where B is the 26 dB emission bandwidth in megahertz. If transmitting antennas of directional gain greater than 6 dBi are used, both the maximum conducted output power and the maximum power spectral density shall be reduced by the amount in dB that the directional gain of the antenna exceeds 6 dBi.
3. For the band 5.725-5.850 GHz, the maximum conducted output power over the frequency band of operation shall not exceed 1 W. If transmitting antennas of directional gain greater than 6 dBi are used, both the maximum conducted output power and the maximum power spectral density shall be reduced by the amount in dB that the directional gain of the antenna exceeds 6 dBi.

5.3. Test Procedure

The EUT was setup to ANSI C63.10: 2013; tested to U-NII test procedure of 789033.

5.4. Test Result of Maximum Conducted Output Power

Refer as Appendix C

6. Maximum Power Spectral Density

6.1. Test Setup

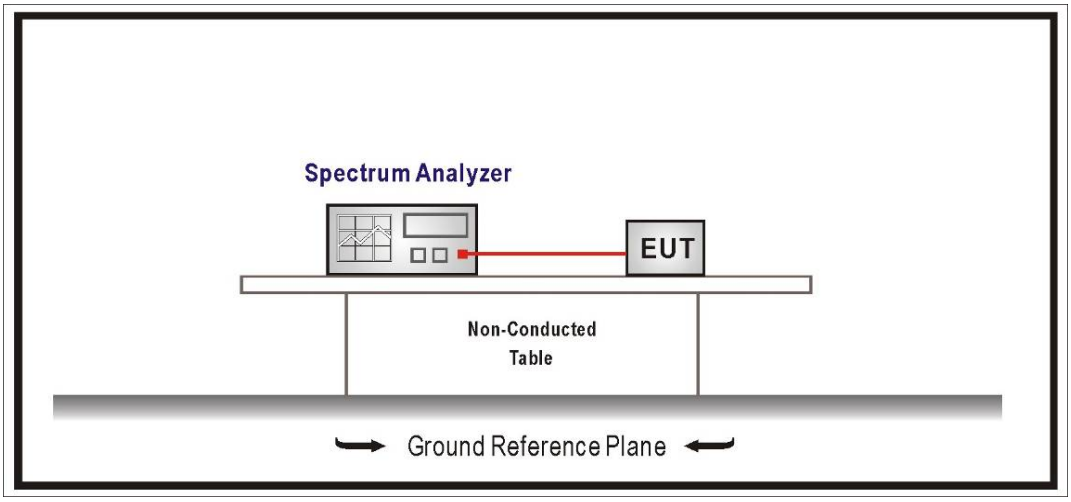

6.2. Test Limit

1. For the band 5.15 ~ 5.25 GHz, the peak power spectral density shall not exceed 17 dBm in any 1 MHz band. If transmitting antenna of directional gain greater than 6 dBi are used, the peak power spectral density shall be reduced by the amount in dB that directional gain of the antenna exceeds 6 dBi.
2. For client devices in the 5.15 ~ 5.25 GHz band, the maximum power spectral density shall not exceed 11 dBm in any 1 megahertz band. If transmitting antennas of directional gain greater than 6 dBi are used, both the maximum conducted output power and the maximum power spectral density shall be reduced by the amount in dB that the directional gain of the antenna exceeds 6 dBi
3. For the 5.25 ~ 5.35 GHz ,5470 ~ 5600 MHz and 5650 ~ 5725 MHz, the peak power spectral density shall not exceed 11 dBm in any 1-MHz band. If transmitting antenna of directional gain greater than 6 dBi are used, the peak power spectral density shall be reduced by the amount in dB that directional gain of the antenna exceeds 6 dBi.
4. For the band 5.725 ~ 5.850 GHz, the peak power spectral density shall not exceed 30 dBm in any 500 kHz band. If transmitting antenna of directional gain greater than 6 dBi are used, the peak power spectral density shall be reduced by the amount in dB that directional gain of the antenna exceeds 6 dBi.

6.3. Test Procedure

The EUT was setup to ANSI C63.10: 2013; tested to U-NII test procedure of 789033.

6.4. Test Result of Maximum Power Spectral Density

Refer as Appendix D

7. Transmitter Radiated Spurious Emission

7.1. Test Setup

9 kHz ~ 30 MHz

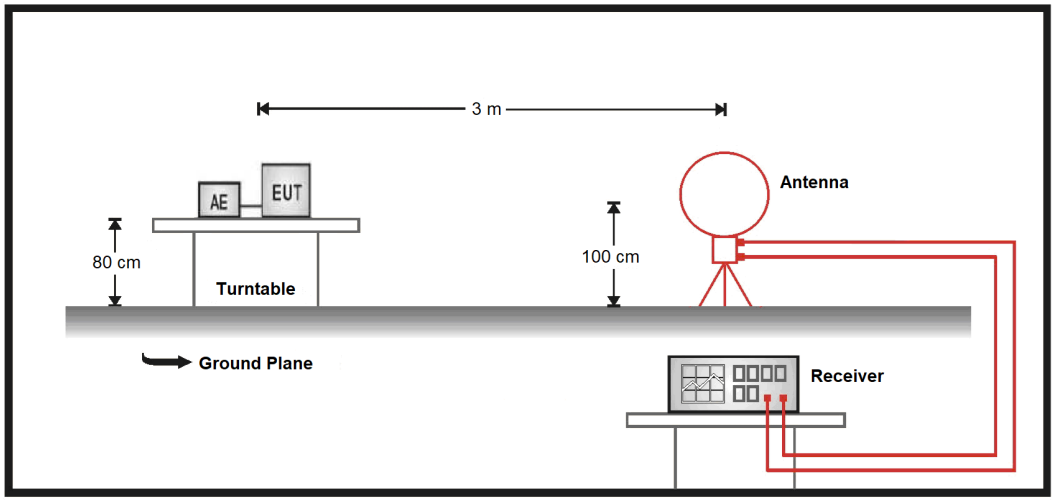

30 MHz ~ 1 GHz

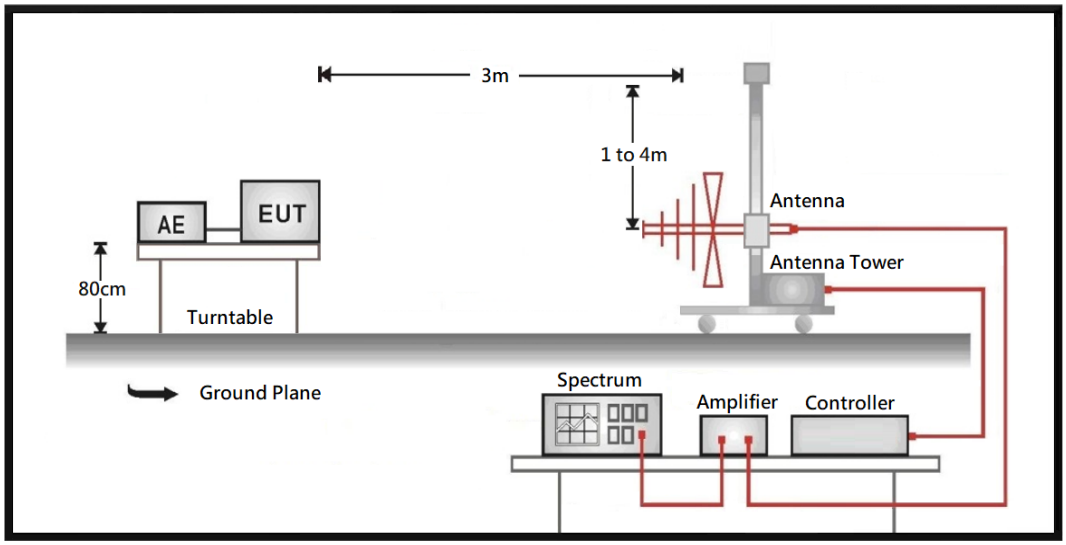

Above 1 GHz

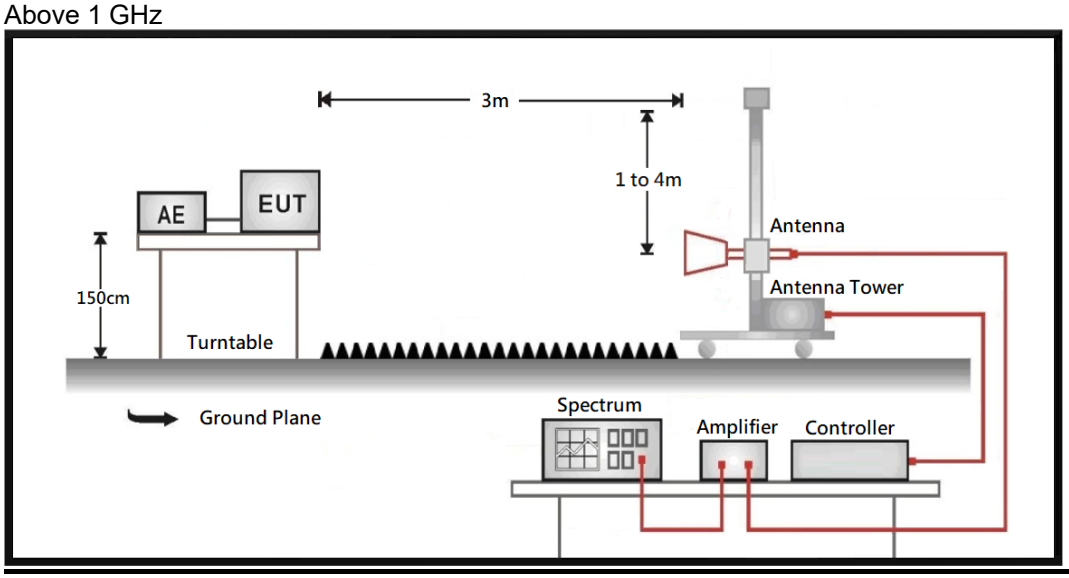

7.2. Test Limit

Frequency (MHz)	Field strength (μV/m)	Field strength (dBμV/m)	Measurement distance (m)
0.009 – 0.490	2400/F(kHz)	20 log (2400/F(kHz))	300
0.490 – 1.705	24000/F(kHz)	20 log (24000/F(kHz))	30
1.705 - 30	30	29.5	30
30 - 88	100	40	3
88 - 216	150	43.5	3
216 - 960	200	46	3
Above 960	500	54	3

Remarks:

1. Field strength (dBμV/m) = 20 log Field strength (μV/m)
2. In the Above Table, the tighter limit applies at the band edges.
2. Distance refers to the distance in meters between the measuring instrument antenna and the closed point of any part of the device or system

Unwanted Emission out of the restricted bands Test Limit

Frequency (MHz)	EIRP Limit (dBm/MHz)	Equivalent Field Strength (dBμV/m@3m)
5150 – 5250	-27	68.2
5250 – 5350	-27	68.2
5470 – 5725	-27	68.2
5725 – 5850	-27 *1	68.2 *1
	10 *2	105.2 *2
	15.6 *3	110.8 *3
	27 *4	122.2 *4

*1 beyond 75 MHz or more above of the band edge.
*2 below the band edge increasing linearly to 10 dBm/MHz at 25 MHz above.
*3 below the band edge increasing linearly to a level of 15.6 dBm/MHz at 5 MHz above.
*4 from 5 MHz above or below the band edge increasing linearly to a level of 27 dBm/MHz at the band edge.

Remark:

The following formula is used to convert the equipment isotropic radiated power (eirp) to field strength:

E = $\frac{1000000\sqrt{30P}}{3}$ uV/m, where P is the eirp (Watts).

7.3. Test Procedure

The EUT and its simulators are placed on a turn table which is 0.8 or 1.5 meter above ground. The turn table can rotate 360 degrees to determine the position of the maximum emission level. The EUT was positioned such that the distance from antenna to the EUT was 3 meters.

The antenna can move up and down between 1 meter and 4 meters to find out the maximum emission level. Both horizontal and vertical polarization of the antenna are set on measurement. In order to find the maximum emission, all of the interface cables must be manipulated according to ANSI C63.10: 2013 on radiated measurement.

The additional latch filter below 1 GHz was used to measure the level of harmonics radiated emission during field dtrength of harmonics measurement.

The bandwidth below 1 GHz setting on the field strength meter is 120 kHz, above 1 GHz are 1 MHz.

The frequency range from 9 kHz to 10th harmonics and included The frequency range from the lowest oscillator frequency generated within the device up to the 10th harmonic was checked is checked.

7.4. Test Result of Transmitter Radiated Spurious Emission

Refer as Appendix E