UC-8200 Series Hardware User's Manual

Edition 1.0, February 2019

www.moxa.com/product

© 2019 Moxa Inc. All rights reserved.

UC-8200 Series Hardware User's Manual

The software described in this manual is furnished under a license agreement and may be used only in accordance with the terms of that agreement.

Copyright Notice

© 2019 Moxa Inc. All rights reserved.

Trademarks

The MOXA logo is a registered trademark of Moxa Inc.
All other trademarks or registered marks in this manual belong to their respective manufacturers.

Disclaimer

Information in this document is subject to change without notice and does not represent a commitment on the part of Moxa.

Moxa provides this document as is, without warranty of any kind, either expressed or implied, including, but not limited to, its particular purpose. Moxa reserves the right to make improvements and/or changes to this manual, or to the products and/or the programs described in this manual, at any time.

Information provided in this manual is intended to be accurate and reliable. However, Moxa assumes no responsibility for its use, or for any infringements on the rights of third parties that may result from its use.

This product might include unintentional technical or typographical errors. Changes are periodically made to the information herein to correct such errors, and these changes are incorporated into new editions of the publication.

Technical Support Contact Information

www.moxa.com/support

Moxa Americas
Toll-free: 1-888-669-2872
Tel: +1-714-528-6777
Fax: +1-714-528-6778

Moxa Europe
Tel: +49-89-3 70 03 99-0
Fax: +49-89-3 70 03 99-99

Moxa India
Tel: +91-80-4172-9088
Fax: +91-80-4132-1045

Moxa China (Shanghai office)
Toll-free: 800-820-5036
Tel: +86-21-5258-9955
Fax: +86-21-5258-5505

Moxa Asia-Pacific
Tel: +886-2-8919-1230
Fax: +886-2-8919-1231

Table of Contents

1. Introduction 1-1
- Model Descriptions 1-2
- Package Checklist 1-2
- Product Features 1-2
- Product Specifications 1-2

2. Hardware Introduction 2-1
- Appearance 2-2
  - UC-8210 Series 2-2
  - UC-8220 Series 2-4
- Dimensions 2-5
- LED Indicators 2-7
- Reboot 2-7
- Reset to Default 2-7
- Real-time Clock 2-7
- Installation Options 2-8
  - DIN-rail Mounting 2-8
  - Optional Wall Mounting 2-9

3. Hardware Connection Description 3-1
- Wiring Requirements 3-2
  - Connecting the Power 3-2
  - Grounding the Unit 3-2
- Connecting to the Network 3-3
- Connecting to a USB Device 3-3
- Connecting to Serial Ports 3-3
- Inserting the micro SD Card 3-3
- Connecting to the Console Port 3-4
- Connecting the CAN Port 3-4
- Connecting the Digital Inputs and Digital Outputs 3-4
- Inserting the SIM Card 3-5
- Connecting the Antennas 3-5

A. Regulatory Approval Statements A-1

1

Introduction

The UC-8200 computing platform is designed for embedded data-acquisition applications. The UC-8200 platform comes with two RS-232/422/485 serial ports and dual 10/100/1000 Mbps Ethernet LAN ports, as well as a Mini PCIe socket to support cellular and Wi-Fi modules. These versatile communication capabilities let users efficiently adapt the UC-8200 to a variety of complex communications solutions.

The following topics are covered in this chapter:

- **Model Descriptions**
- **Package Checklist**
- **Product Features**
- **Product Specifications**

Model Descriptions

The UC-8200 Series includes the following models:

- **UC-8210-T-LX:** Industrial computing platform with 2 serial ports, 2 Ethernet ports, 1 CAN port, USB, micro SD socket, -40 to 85°C operating temperature range
- **UC-8210-T-LX-S**:Industrial computing platform with 2 serial ports, 2 Ethernet ports, 1 CAN port, TPM, USB, micro SD socket, -40 to 85°C operating temperature range
- **UC-8220-T-LX:** Industrial computing platform with 2 serial ports, 2 Ethernet ports, 1 CAN port, USB, micro SD socket, LTE, Wi-Fi, -40 to 85°C operating temperature range
- **UC-8220-T-LX-US-S:** Industrial computing platform with 2 serial ports, 2 Ethernet ports, 1 CAN port, TPM, USB, micro SD socket, USA LTE band, Wi-Fi, -40 to 85°C operating temperature range
- **UC-8220-T-LX-EU-S:** Industrial computing platform with 2 serial ports, 2 Ethernet ports, 1 CAN port, TPM, USB, micro SD socket, Europe LTE band, Wi-Fi, -40 to 85°C operating temperature range
- **UC-8220-T-LX-AP-S:** Industrial computing platform with 2 serial ports, 2 Ethernet ports, 1 CAN port, TPM, USB, micro SD socket, Asia/Pacific LTE band, Wi-Fi, -40 to 85°C operating temperature range

Package Checklist

Before installing a UC-8200 computer, verify that the package contains the following items:

- UC-8200 Series computer
- Console cable
- Power jack
- Quick Installation Guide (printed)
- Warranty card

Notify your sales representative if any of the above items are missing or damaged.

NOTE The console cable and power jack can be found beneath the molded pulp cushioning inside the product box.

Product Features

- Armv7 Cortex-A8 1 GHz processor
- 2 auto-sensing 10/100 Mbps Ethernet ports
- SD socket for storage expansion
- Programmable LEDs and a programmable button for easy installation and maintenance
- Mini PCIe socket for cellular module
- Debian 9 open platform
- -40 to 70°C wide temperature range with LTE enabled

Product Specifications

NOTE The latest specifications for Moxa's products can be found at https://www.moxa.com.

2

Hardware Introduction

The UC-8200 embedded computers are compact and rugged, making them suitable for industrial applications. The LED indicators allow you to monitor device performance and quickly identify issues, and the multiple ports can be used to connect a variety of devices. The UC-8200 Series comes with a reliable and stable hardware platform that lets you devote the bulk of your time to application development. In this chapter, we provide basic information about the embedded computer's hardware and its various components.

The following topics are covered in this chapter:

- **Appearance**
  - UC-8210 Series
  - UC-8220 Series
- **Dimensions**
- **LED Indicators**
-
- **Reset to Default**
- **Real-time Clock**
- **Installation Options**
  - DIN-rail Mounting
  - Optional Wall Mounting

Appearance

UC-8210 Series

Top Panel View

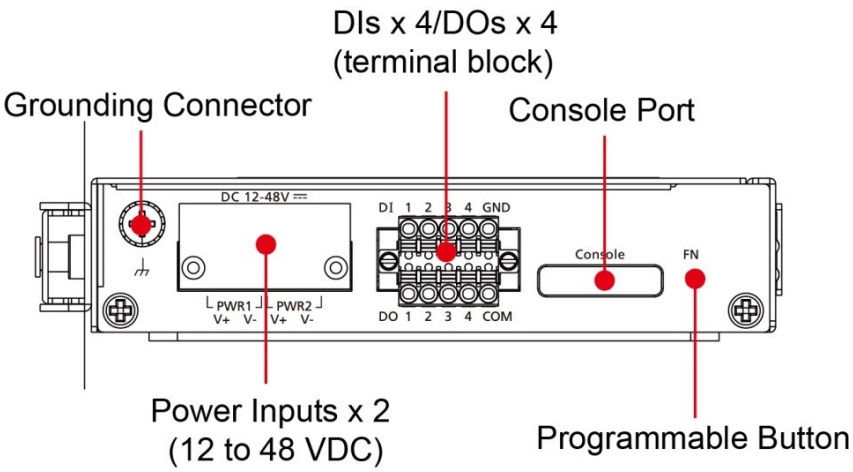

Front Panel View

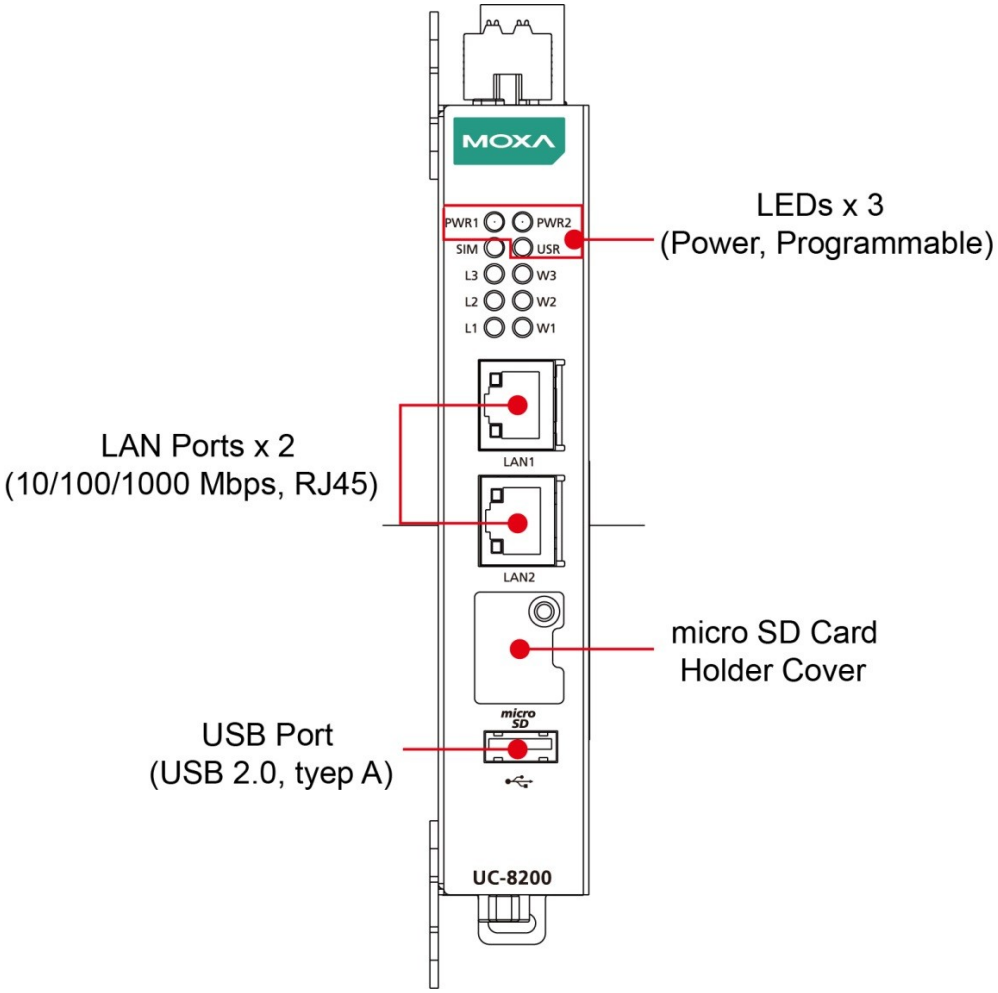

Bottom Panel View

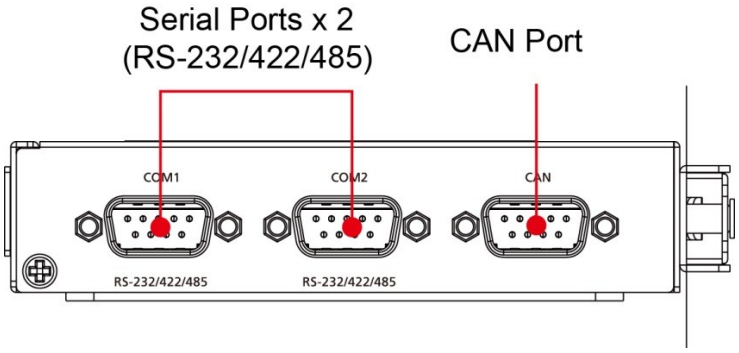

UC-8220 Series

Front Panel View

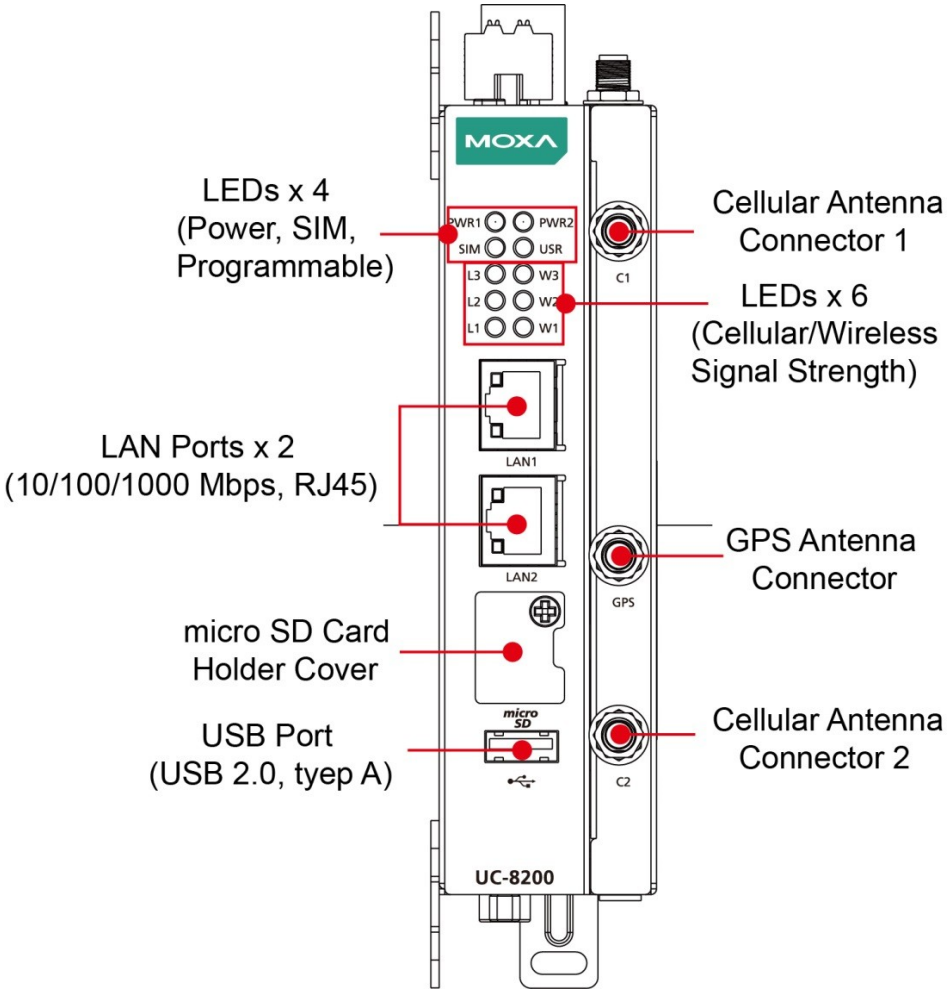

Bottom Panel View

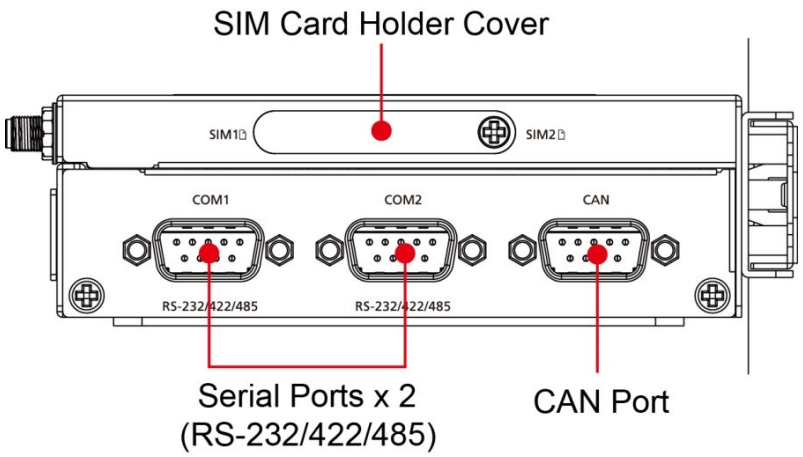

Dimensions

Unit: mm (in)

UC-8210 Series

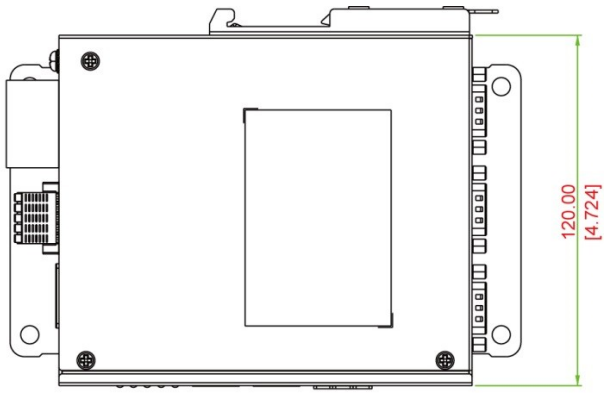

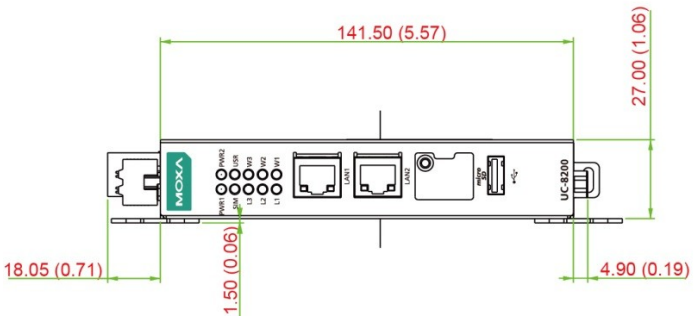

UC-8220 Series

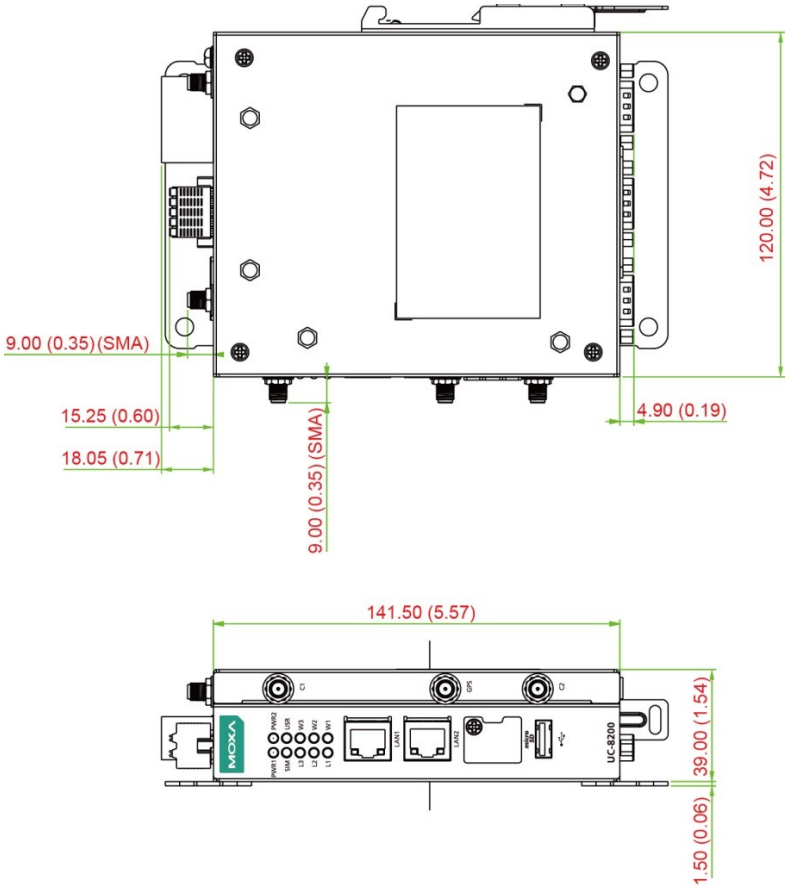

LED Indicators

The function of each LED is described in the table below:

LED Name		Color	Function	
USB		Green	Steady On	USB device is connected and working normally.
			Off	USB device is not connected.
micro SD		Green	Steady On	SD Card inserted and working normally.
			Off	SD card is not detected.
Power		Green	Power is on and the computer is working normally.	
		Off	Power is off.	
LAN1/LAN 2 (RJ45 connector)		Green	Steady On	1000 Mbps Ethernet link
			Blinking	Data transmission in progress
		Yellow	Steady On	100 Mbps Ethernet link
			Blinking	Data transmission in progress
		Off	Ethernet is not connected.	
Wireless Signal Strength (L1/L2/L3)		Green Yellow Red	The number of glowing LEDs indicates the signal strength. L3 (Green + Yellow + Red): Excellent L2 (Yellow + Red): Good L1 (Red): Poor	
		Off	Wireless module is not detected.	
USR	User-defined	Green	This LED can be defined by users. For details, refer to Hardware User's Manual.	

Reboot

To reboot the computer, press the programmable button for 1 second.

Reset to Default

The UC-8200 is also provided with a **Reset to Default** function which can reset the operating system back to the factory default status. Press and hold the **programmable** button between 7 to 9 seconds to reset the computer to the factory default settings. When the reset button is held down, the **Ready** LED will blink once every second. The **Ready** LED will become steady when you hold the button continuously for 7 to 9 seconds. Release the button within this period to load the factory default settings.

Real-time Clock

The UC-8200's real time clock is powered by a non-chargeable battery. We strongly recommend that you do not replace the lithium battery without help from a qualified Moxa support engineer. If you need to change the battery, contact the Moxa RMA service team.

WARNING

There is a risk of explosion if the battery is replaced with an incorrect type.

Installation Options

DIN-rail Mounting

The aluminum DIN-rail attachment plate is already attached to the product's casing. To mount the UC-8200 on to a DIN rail, make sure that the stiff metal spring is facing upwards and follow these steps.

1. Pull down the bottom slider of the DIN-rail bracket located at the back of the unit
2. Insert the top of the DIN rail into the slot just below the upper hook of the DIN-rail bracket.
3. Latch the unit firmly on to the DIN rail as shown in the illustrations below.
4. Push the slider back into place.

UC-8210

UC-8220

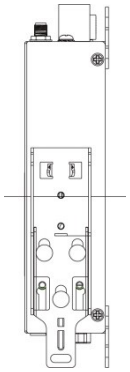

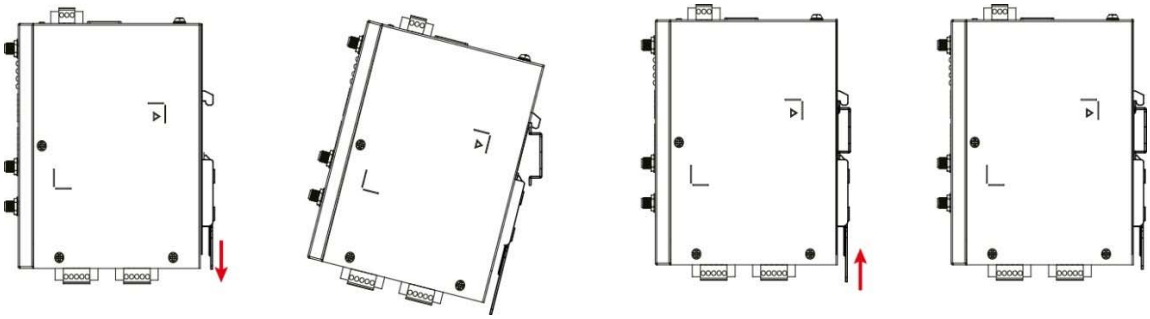

Optional Wall Mounting

The UC-8200 Series can be mounted on to a wall using a wall-mounting kit as shown in the following illustrations.

Step 1

Use four screws to fasten the wall-mounting brackets on the left panel of the computer.

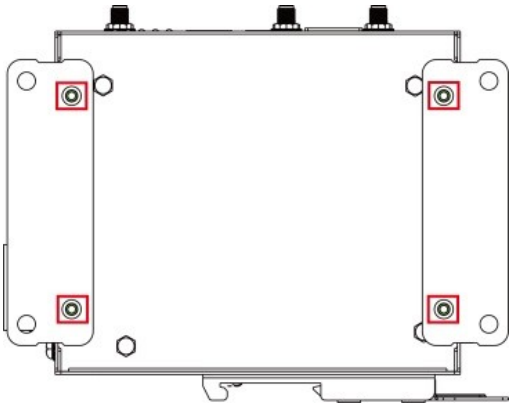

Step 2

Use another four screws to mount the computer on a wall or a cabinet.

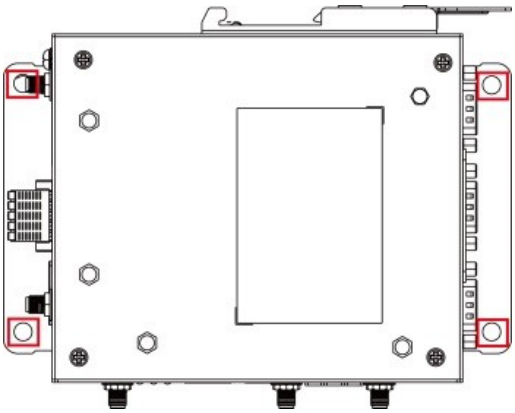

The optional wall-mounting kit is not included in the product package and should be purchased separately.

3

Hardware Connection Description

In this chapter, we describe how to connect the UC-8200 to a network and various devices.

The following topics are covered in this chapter:

- **Wiring Requirements**
  - Connecting the Power
  - Grounding the Unit
- **Connecting to the Network**
- **Connecting to a USB Device**
- **Connecting to Serial Ports**
- **Inserting the micro SD Card**
- **Connecting to the Console Port**
- **Connecting the CAN Port**
- **Connecting the Digital Inputs and Digital Outputs**
- **Inserting the SIM Card**
- **Connecting the Antennas**

Wiring Requirements

In this section, we describe how to connect various devices to the embedded computer. Be sure to read and follow these common safety precautions before proceeding with the installation of any electronic device:

- Use separate paths to route wiring for power and devices. If power wiring and device wiring paths must cross, make sure the wires are perpendicular at the intersection point.

NOTE Do not run signal or communication wiring and power wiring in the same wire conduit. To avoid interference, wires with different signal characteristics should be routed separately.

- You can use the type of signal transmitted through a wire to determine which wires should be kept separate. The rule of thumb is that wiring that shares similar electrical characteristics can be bundled together.
- Keep input wiring and output wiring separate.
- When necessary, it is strongly advised that you label wiring to all devices in the system.

ATTENTION

Safety First!

Be sure to disconnect the power cord before doing installations and/or wiring.

Electrical Current Caution!

Calculate the maximum possible current in each power wire and common wire. Observe all electrical codes dictating the maximum current allowable for each wire size.

If the current goes above the maximum ratings, the wiring could overheat, causing serious damage to your equipment.

Temperature Caution!

Be careful when handling the unit. When the unit is plugged in, the internal components generate heat, and consequently the outer casing may feel hot to the touch.

Connecting the Power

Terminal Block

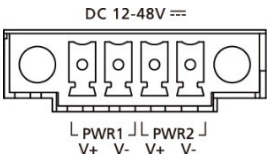

Connect the power jack (in the package) to the UC-8200 Series' DC terminal block (located on the top panel), and then connect the power adapter. It takes about 30 seconds for the system to boot up. Once the system is ready, the Power LED will light up. Both models support dual power inputs.

Grounding the Unit

There is a grounding connector on the top panel of the computer. Use this connector to connect a well-grounded mounting surface, such as a metal panel.

ATTENTION

A shielded power cord is required to meet FCC emission limits and also to prevent interference with nearby radio and television reception. It is essential that only the supplied power cord be used.

You are cautioned that changes or modifications not expressly approved by the party responsible for compliance could void your authority to operate the equipment.

Connecting to the Network

The Ethernet ports are located on the front panel of the UC-8200 computers. The pin assignments for the Ethernet port are shown in the following figure. If you are using your own cable, make sure that the pin assignments on the Ethernet cable connector match the pin assignments on the Ethernet port.

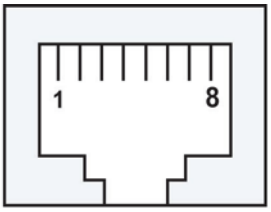

Pin	10/100 Mbps	10/100/1000 Mbps
1	Tx+	TRD(0)+
2	Tx-	TRD(0)-
3	Rx+	TRD(1)+
4	–	TRD(2)+
5	–	TRD(2)-
6	Rx-	TRD(1)-
7	–	TRD(3)+
8	–	TRD(3)-

Connecting to a USB Device

The UC-8200 Series computers come with a USB port located at the lower part of the front panel, allowing users to connect to a device with an USB interface. The USB port uses a type A connector. By default, the USB storage is mounted at **/mnt/usbstorage.**

Connecting to Serial Ports

The two serial ports (P1 and P2) use terminal connectors. Each port can be configured by software for RS-232, RS-422, or RS-485. The pin assignments for the ports are shown in the following table:

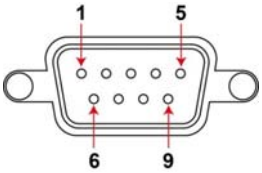

Pin	RS-232	RS-422/ RS-485	RS-485 2w
1	–	TxD-(A)	–
2	RxD	TxD(B)	–
3	TxD	RxD+(B)	Data+(B)
4	DTR	RxD-(A)	Data-(A)
5	GND	GND	GND
6	DSR	–	–
7	RTS	–	–
8	CTS	–	–

Inserting the micro SD Card

The UC-8200 Series comes with a micro SD socket for storage expansion. The micro SD socket is located at the lower part on the front panel. To install the card, remove the screw and the protection cover to access the socket, and then insert the micro SD card into the socket directly. You will hear a click when the cards are in place. To remove the card, push the card in before releasing it.

Connecting to the Console Port

The console port is an RS-232 port located on the top panel, and can be connected to with a 4-pin pin header cable. You can use this port for debugging or firmware upgrade.

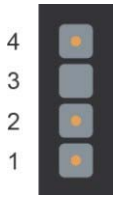

Pin	Signal
1	TxD
2	RxD
3	NC
4	GND

Connecting the CAN Port

There is a CAN port in DB9 interface, located on the bottom panel. Refer to the figure on the left for detailed pin definitions.

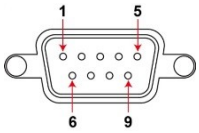

Pin	Definition
1	–
2	CAN_L
3	CAN_GND
4	_
5	(CAN_SHLD)
6	(GND)
7	CAN_H
8	_
9	(CAN_V+)

Connecting the Digital Inputs and Digital Outputs

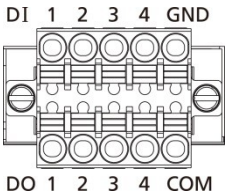

There are four digital inputs and four digital outputs on the top panel. Refer to the figure on the left for detailed pin definitions.

Inserting the SIM Card

The UC-8220 computer comes with a SIM card socket that allows users to install two SIM card for the cellular communication.

Step 1

Remove the screw on the SIM card holder cover located on the bottom panel of the UC-8220 computer.

Step 2

Insert the SIM card into the socket. Make sure you insert in the right direction. To remove the SIM card, press the SIM card in to release and then you can pull out the SIM card.

Connecting the Antennas

There are two cellular antenna connectors (C1 and C2) on the front panel of the UC-8200 Series. Also a GPS connector is for the GPS module. All three connectors are of SMA type. Connect the antennas on these connectors.

There are two Wi-Fi antenna connectors (W1 and W2) on the top panel of the UC-8200 Series. Connect the antennas on the connectors.

A

Regulatory Approval Statements

This device complies with part 15 of the FCC Rules. Operation is subject to the following two conditions: (1) This device may not cause harmful interference, and (2) this device must accept any interference received, including interference that may cause undesired operation.

Class A: FCC Warning! This equipment has been tested and found to comply with the limits for a Class A digital device, pursuant to part 15 of the FCC Rules. These limits are designed to provide reasonable protection against harmful interference when the equipment is operated in a commercial environment. This equipment generates, uses, and can radiate radio frequency energy and, if not installed and used in accordance with the instruction manual, may cause harmful interference to radio communications. Operation of this equipment in a residential area is likely to cause harmful interference in which case the users will be required to correct the interference at their own expense.

European Community

WARNING

This is a class A product. In a domestic environment this product may cause radio interference in which case the user may be required to take adequate measures.

Federal Communications Commission (FCC) Statement

15.21
You are cautioned that changes or modifications not expressly approved by the part responsible for compliance could void the user's authority to operate the equipment.

FCC RF Radiation Exposure Statement:

1. This Transmitter must not be co-located or operating in conjunction with any other antenna or transmitter.

2. This equipment complies with FCC RF radiation exposure limits set forth for an uncontrolled environment. This equipment should be installed and operated with a minimum distance of 20 centimeters between the radiator and your body.

Canada, Industry Canada (IC)

This device complies with Industry Canada licence-exempt RSS standard(s).
Operation is subject
to the following two conditions:
(1) this device may not cause interference, and
(2) this device must accept any interference, including interference that may cause undesired operation of the device

Le présent appareil est conforme aux CNR d'Industrie Canada applicables aux appareils radio exempts de licence.
L'exploitation est autorisée aux deux conditions suivantes:
(1) l'appareil ne doit pas produire de brouillage, et
(2) l'utilisateur de l'appareil doit accepter tout brouillage radioélectrique subi, même si le
brouillage est susceptible d'en compromettre le fonctionnement.

Caution: Exposure to Radio Frequency Radiation.

To comply with RSS 102 RF exposure compliance requirements, a separation distance of at least 20 cm must be maintained between the antenna of this device and all persons.

Pour se conformer aux exigences de conformité CNR 102 RF exposition, une distance de séparation d'au moins 20 cm doit être maintenue entre l'antenne de cet appareil et toutes les personnes.

Taiwan NCC

Support FDD LTE 850/900/1900/2100 MHz
減少電磁波影響，請妥適使用
『注意：行動電話業務(2G)於106年6月停止提供服務後，本設備2G功能在國內將無法使用。』