WH1221 SLUG position R1.2

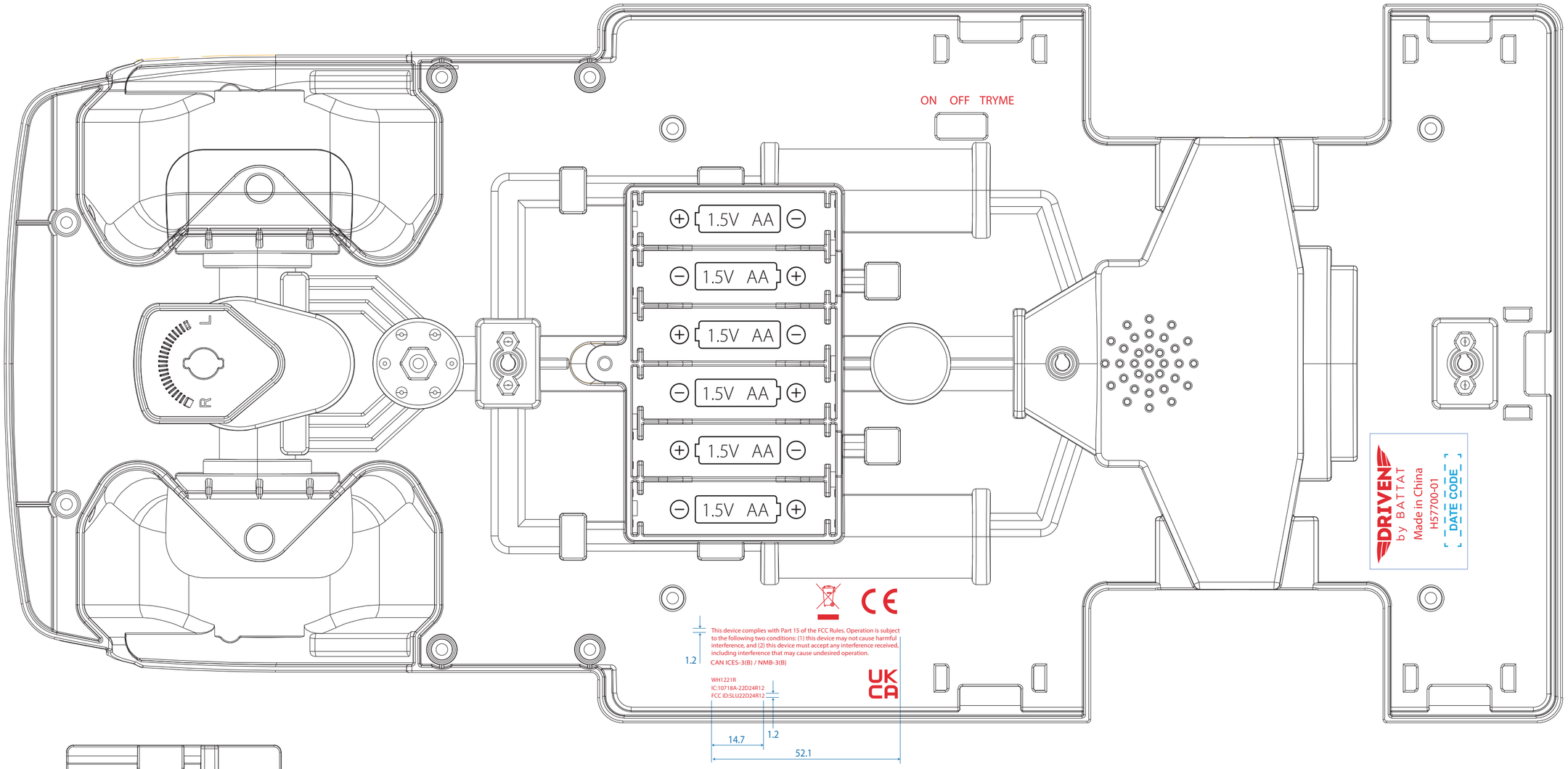

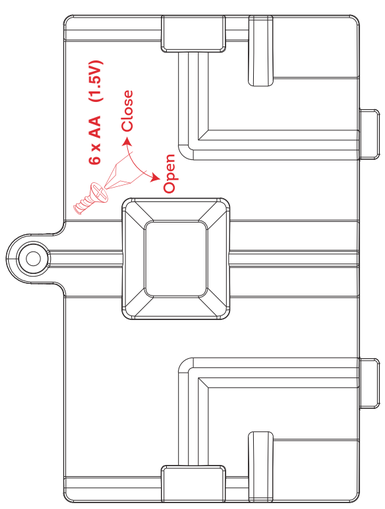

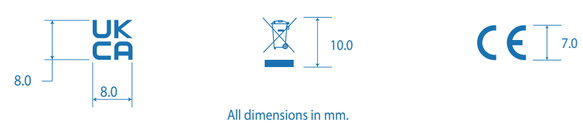

All dimensions in mm.