E-Traveler User Manual

1. Product Overview

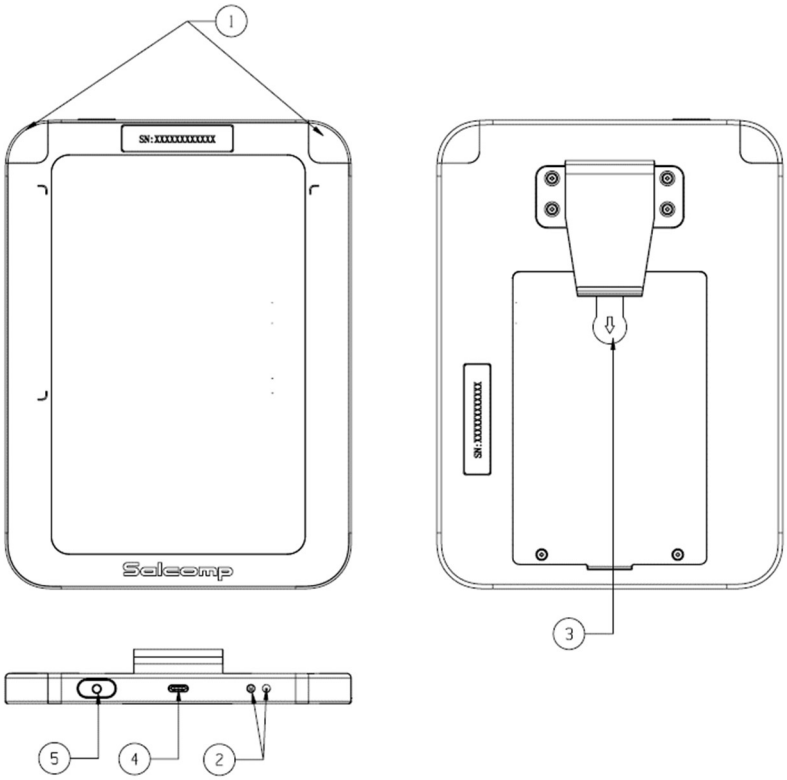

5	Reset button（复位键）
4	Type C USB port（充电接口）
3	Battery isolator（电池隔离片）
2	power indicator（电源指示灯）
1	LED (LED灯)

2. Information and Parameter

Item	Parameter
Product Name	E-Traveler Device
Model Number	ET202011
Dimension	210mmX155mmX26mm
Weight	405g+/-5%
Screen	7.5 inch, 640(H)*384(V) pixel, Black & White
Battery	6000mAh
Wireless	WiFi 2.4GHz

3. User Instructions

- Upon receiving the device, pull out the battery isolator and battery starts power supply;
- E-traveler device automatically searches for WiFi hotspots and connects to available networks according to the SSID information provided by the system;
- Users attach the E-traveler to the material cart and connect the device to the system;
- Backend system regularly pushes material information and reaches E-traveler through the wireless network, and device system refreshes the screen display content;
- With the different LED light definition which is controlled by backend system, users can easily locate the material cart;
- Under the circumstances that the connection is unstable and E-traveler cannot refresh the screen normally, it can be reset via the Reset button, and the device will automatically re-connect to the network system.

4. Battery Charging Instructions

- Device needs to be charged when the battery power capacity is low (<20%) and the power indicator turns to red;
- Device is under charging process and the power indicator turns to blue;
- Device is fully charged when the power indicator turns to green.

Requirements: The E-traveler supports up to 5V/3A fast charge, please use a compliant charger to avoid damage to the device.

5. Software Refreshing and Debugging Instructions

This product provides two software update methods:

i. OTA mode, supporting software developed by user;

ii. Using Arduino to update the software with steps as followed:
   - Unfasten the battery cover screws and take out the battery;
   - Use Micro-USB to connect to the inner interface on the side of the battery compartment, and check whether the "switch button" under the interface is on the Boot side (Figure 1);
   - Turn on the Arduino to read the software to be refreshed;
   - Set the configuration according to the parameters in Figure 2;
   - Click the download button to start downloading the software;
   - To enter COM debugging mode, switch the "switch button" to the opposite direction.

Figure 1

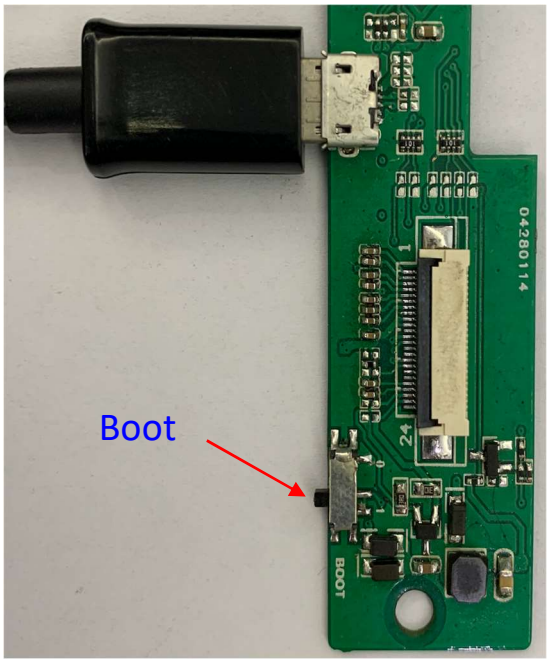

Figure 2

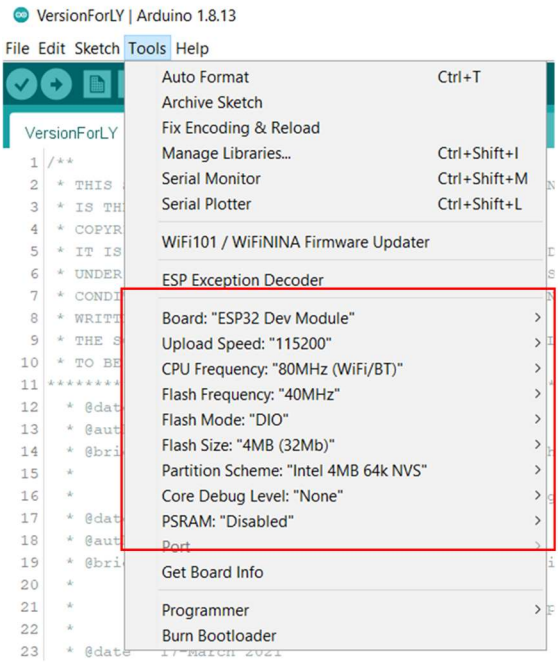

6. FCC Regulatory Compliance

This device complies with Part 15 of the FCC Rules. Operation is subject to the following two conditions: (1) This device may not cause harmful interference, and (2) this device must accept any interference received, including interference that may cause undesired operation.

Warning: changes or modifications not expressly approved by the party responsible for compliance could void the user's authority to operate the equipment.

Note: This equipment has been tested and found to comply with the limits for a Class B digital device, pursuant to Part 15 of the FCC Rules. These limits are designed to provide reasonable protection against harmful interference in a residential installation. This equipment generates, uses and can radiate radio frequency energy and, if not installed and used in accordance with the instructions, may cause harmful interference to radio communications. However, there is no guarantee that interference will not occur in a particular installation.
If this equipment does cause harmful interference to radio or television reception, which can be determined by turning the equipment off and on, the user is encouraged to try to correct the interference by one or more of the following measures:
-- Reorient or relocate the receiving antenna.
-- Increase the separation between the equipment and receiver.
-- Connect the equipment into an outlet on a circuit different from that to which the receiver is connected.
-- Consult the dealer or an experienced radio/TV technician for help.

7.RF Exposure Compliance

This equipment complies with FCC radiation exposure limits set forth for an uncontrolled environment. This equipment should be installed and operated with minimum distance 20cm between the radiator and your body. This transmitter must not be co-located or operating in conjunction with any other antenna or transmitter.