Salcomp

User Manual (representative)

Model No: AW-3, AW-5

==========

1. Please read these safety instructions carefully.
2. Connect the equipment according to the mentioned.
3. Ambient temperature: -40℃ to 85℃
4. This device complies with Part 15 of the FCC Rules. Operation is subject to the following two conditions:

   (1) this device may not cause harmful interference, and

   (2) this device must accept any interference received, including interference that may cause undesired operation.

   changes or modifications not expressly approved by the party responsible for compliance could void the user's authority to operate the equipment.

This equipment has been tested and found to comply with the limits for a Class B digital device, pursuant to Part 15 of the FCC Rules. These limits are designed to provide reasonable protection against harmful interference in a residential installation.

This equipment generates, uses and can radiate radio frequency energy and, if not installed and used in accordance with the instructions, may cause harmful interference to radio communications. However, there is no guarantee that interference will not occur in a particular installation.

If this equipment does cause harmful interference to radio or television reception,which can be determined by turning the equipment off and on, the user is encouraged to try to correct the interference by one or more of the following measures:

-- Reorient or relocate the receiving antenna.

-- Increase the separation between the equipment and receiver.

-- Connect the equipment into an outlet on a circuit different from that to which the receiver is connected.

-- Consult the dealer or an experienced radio/TV technician for help.

ISED compliance statement

This device contains licence-exempt transmitter(s)/receiver(s) that comply with Innovation, Science and Economic Development Canada's licence-exempt RSS(s). Operation is subject to the following two conditions:

(1) This device may not cause interference.

(2) This device must accept any interference, including interference that may cause undesired operation of the device.

L'émetteur/récepteur exempt de licence contenu dans le présent appareil est conforme aux

CNR ’Innovation,

Sciences et Développement économique Canada applicables aux appareils radio exempts de licence. L’exploitation est autorisée aux deux conditions suivantes :

(1) L’appareil ne doit pas produire de brouillage;

(2) L’appareil doit accepter tout brouillage radioélectrique subi, même si le brouillage est susceptible d’en compromettre le fonctionnement.

Radiation Exposure statement

This equipment complies with FCC/IC RSS-102 radiation exposure limits set forth for an uncontrolled environment.

Cet équipement est conforme aux limites d'exposition aux radiations FCC/IC CNR-102 établies pour un environnement non contrôlé.

Company Name: Salcomp (Guigang) Co., Ltd.

Address: Crossroad of Xiliu Road and Xijiu Road, Xijiang Industrial Park, Guigang City, Guangxi, China

SCHAEFFLER

OPTIME

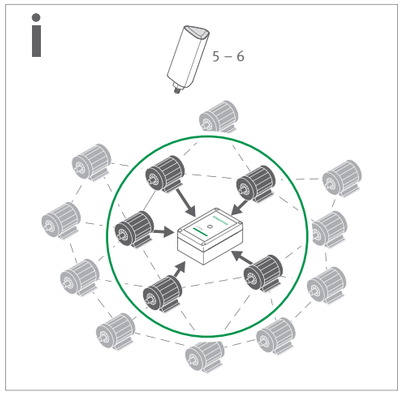

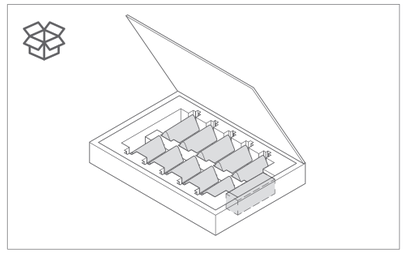

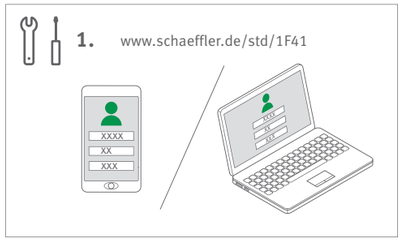

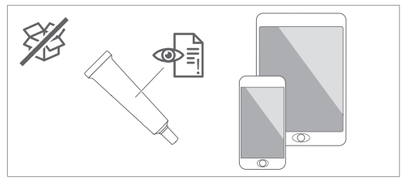

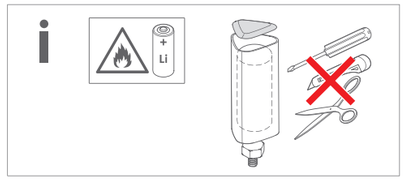

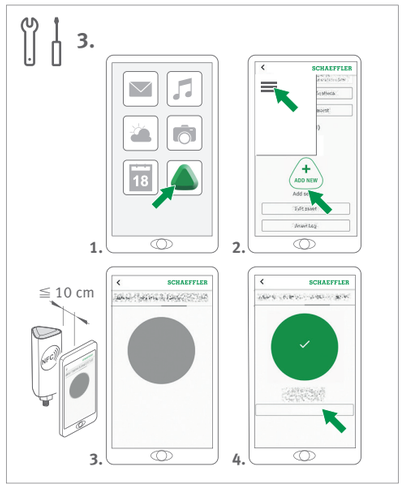

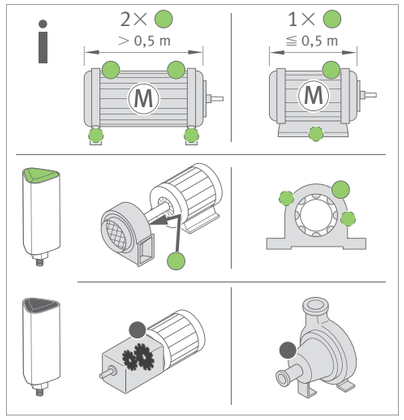

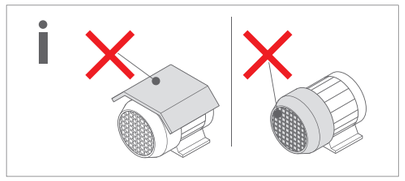

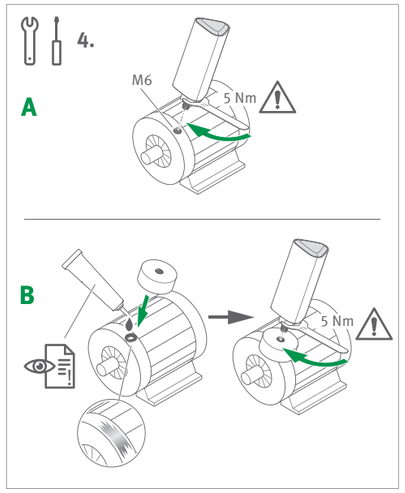

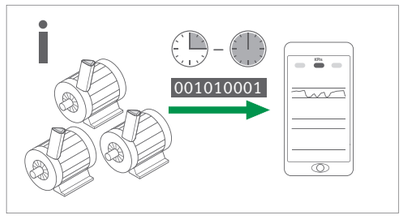

Hiermit erklärt Schaeffler Technologies AG & Co. KG, dass die Funkanlagen Gateway OPTIME und Sensor OPTIME der Richtlinie 2014/53/EU entsprechen. Der vollständige Text der EU-Konformitätserklärung ist unter der folgenden Internetadresse verfügbar: www.schaeffler.de/std/1F40

Hereby, Schaeffler Technologies AG & Co. KG declares that the radio equipment Gateway OPTIME and Sensor OPTIME are in compliance with Directive 2014/53/EU. The full text of the EU declaration of conformity is available at the following internet address: www.schaeffler.de/std/1F40

Schaeffler Monitoring Services GmbH
Kaiserstraße 100
52134 Herzogenrath · Germany
www.schaeffler.com

BA 68-1 / 0m-0M / 2020063 / Printed in Germany by hofmann

SCHAEFFLER

OPTIME

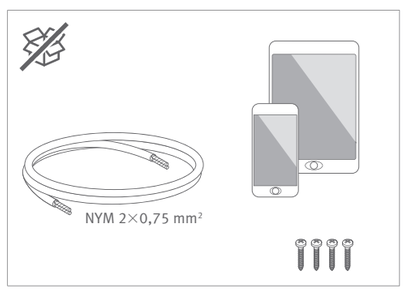

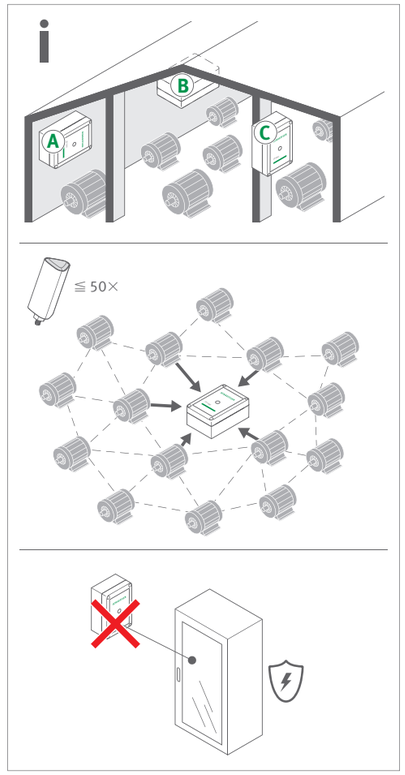

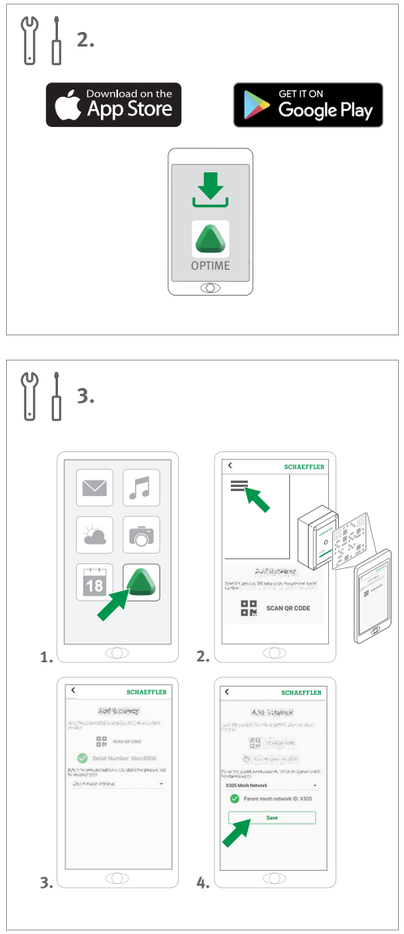

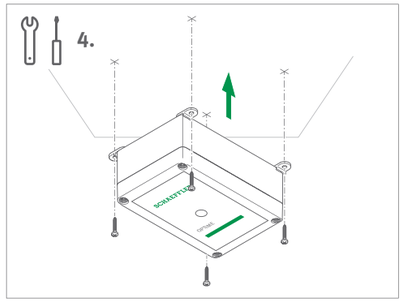

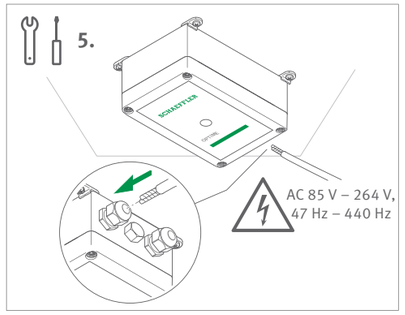

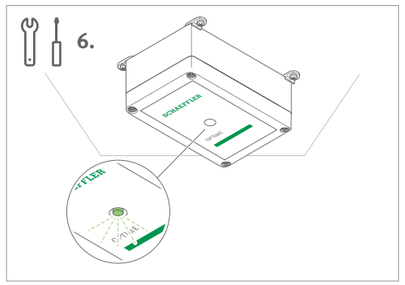

Hiermit erklärt Schaeffler Technologies AG & Co. KG, dass die Funkanlagen Gateway OPTIME und Sensor OPTIME der Richtlinie 2014/53/EU entsprechen. Der vollständige Text der EU-Konformitätserklärung ist unter der folgenden Internetadresse verfügbar: www.schaeffler.de/std/1F40

Hereby, Schaeffler Technologies AG & Co. KG declares that the radio equipment Gateway OPTIME and Sensor OPTIME are in compliance with Directive 2014/53/EU. The full text of the EU declaration of conformity is available at the following internet address: www.schaeffler.de/std/1F40

Schaeffler Monitoring Services GmbH
Kaiserstraße 100
52134 Herzogenrath · Germany
www.schaeffler.com

BA 68-2 / 0m-0M / 20200061 / Printed in Germany by hofmann