FCC SAR Test Report

Report No.	:	**SA151125W002**
Applicant	:	**Wanlida Group co.,LTD**
Address	:	**No. 618 Jiahe Road Xiamen Fujian, China 361006**
Product	:	**Phablet**
FCC ID	:	**SMFE6T**
Brand	:	**Malata**
Model No.	:	**E6T**
Standards	:	**FCC 47 CFR Part 2 (2.1093) / IEEE C95.1:1992 / IEEE 1528:2013** **KDB 865664 D01 v01r04 / KDB 865664 D02 v01r02 / KDB 248227 D01 v02r02** **KDB 447498 D01 v06 / KDB 648474 D04 v01r03 / KDB 941225 D01 v03r01** **KDB 941225 D06 v02r01**
Sample Received Date	:	**Nov. 25, 2015**
Date of Testing	:	**Dec. 03, 2015 ~ Dec. 08, 2015**

CERTIFICATION: The above equipment have been tested by **Bureau Veritas Shenzhen Co., Ltd. Dongguan Branch**, and found compliance with the requirement of the above standards. The test record, data evaluation & Equipment Under Test (EUT) configurations represented herein are true and accurate accounts of the measurements of the sample's SAR characteristics under the conditions specified in this report. It should not be reproduced except in full, without the written approval of our laboratory. The client should not use it to claim product certification, approval, or endorsement by A2LA or any government agencies.

Prepared By : _____
Amyee Qian / Engineer

Approved By : _____
William Chung / Manager

Certificate #2951.01

This report is for your exclusive use. Any copying or replication of this report to or for any other person or entity, or use of our name or trademark, is permitted only with our prior written permission. This report sets forth our findings solely with respect to the test samples identified herein. The results set forth in this report are not indicative or representative of the quality or characteristics of the lot from which a test sample was taken or any similar or identical product unless specifically and expressly noted. Our report includes all of the tests requested by you and the results thereof based upon the information that you provided to us. You have 60 days from date of issuance of this report to notify us of any material error or omission caused by our negligence, provided, however, that such notice shall be in writing and shall specifically address the issue you wish to raise. A failure to raise such issue within the prescribed time shall constitute your unqualified acceptance of the completeness of this report, the tests conducted and the correctness of the report contents. Unless specific mention, the uncertainty of measurement has been explicitly taken into account to declare the compliance or non-compliance to the specification.

Table of Contents

Release Control Record **3**
1. Summary of Maximum SAR Value **4**
2. Description of Equipment Under Test **5**
3. SAR Measurement System **6**
3.1 Definition of Specific Absorption Rate (SAR) 6
3.2 SPEAG DASY System 6
3.2.1 Robot 7
3.2.2 Probes 8
3.2.3 Data Acquisition Electronics (DAE) 8
3.2.4 Phantoms 9
3.2.5 Device Holder 10
3.2.6 System Validation Dipoles 10
3.2.7 Tissue Simulating Liquids 11
3.3 SAR System Verification 14
3.4 SAR Measurement Procedure 15
3.4.1 Area & Zoom Scan Procedure 15
3.4.2 Volume Scan Procedure 15
3.4.3 Power Drift Monitoring 16
3.4.4 Spatial Peak SAR Evaluation 16
3.4.5 SAR Averaged Methods 16
4. SAR Measurement Evaluation **17**
4.1 EUT Configuration and Setting 17
4.2 EUT Testing Position 21
4.2.1 Head Exposure Conditions 21
4.2.2 Body-worn Accessory Exposure Conditions 22
4.2.1 Hotspot Mode Exposure Conditions 23
4.2.3 Extremity Exposure Conditions 24
4.2.4 SAR Test Exclusion Evaluations 25
4.2.2 Simultaneous Transmission Possibilities 26
4.3 Tissue Verification 27
4.4 System Validation 27
4.5 System Verification 28
4.6 Maximum Output Power 29
4.6.1 Maximum Conducted Power 29
4.6.2 Measured Conducted Power Result 30
4.7 SAR Testing Results 33
4.7.1 SAR Test Reduction Considerations 33
4.7.2 SAR Results for Head Exposure Condition 34
4.7.3 SAR Results for Body-worn Exposure Condition (Separation Distance is 1.0 cm Gap) 34
4.7.4 SAR Results for Hotspot Condition (Separation Distance is 1.0 cm Gap) 35
4.7.5 SAR Results for Extremity Condition (Separation Distance is 0 cm Gap) 35
4.7.6 SAR Measurement Variability 36
4.7.7 Simultaneous Multi-band Transmission Evaluation 37
5. Calibration of Test Equipment **43**
6. Measurement Uncertainty **44**
7. Information on the Testing Laboratories **46**

Appendix A. SAR Plots of System Verification
Appendix B. SAR Plots of SAR Measurement
Appendix C. Calibration Certificate for Probe and Dipole
Appendix D. Photographs of EUT and Setup

Release Control Record

Report No.	Reason for Change	Date Issued
SA151125W002	Initial release	Dec. 15, 2015

1. Summary of Maximum SAR Value

Equipment Class	Mode	Highest Reported Head SAR_{1g} (W/kg)	Highest Reported Body-worn SAR_{1g} (1.0 cm Gap) (W/kg)	Highest Reported Hotspot SAR_{1g} (1.0 cm Gap) (W/kg)	Highest Reported Extremity SAR_{10g} (0 cm Gap) (W/kg)
PCE	GSM850	0.17	0.35	0.78	N/A
	GSM1900	0.09	0.29	0.85	N/A
	WCDMA II	0.16	0.50	0.78	N/A
	WCDMA V	0.15	0.30	0.30	N/A
DTS	2.4G WLAN	0.24	0.10	0.10	N/A
NII	5.3G WLAN	0.13	0.03	N/A	0.16
	5.8G WLAN	0.22	N/A	N/A	0.20
DSS	Bluetooth	N/A	N/A	N/A	N/A
Highest Simultaneous Transmission SAR		Head (W/kg)	Body-worn (W/kg)	Hotspot (W/kg)	Extremity (W/kg)
PCE + DTS		0.41	0.60	0.88	N/A
PCE + NII		0.39	0.86	N/A	0.20
PCE + DSS		N/A	0.62	N/A	0.24

Note:

1. The SAR limit **(Head & Body: SAR_{1g} 1.6 W/kg, Extremity: SAR_{10g} 4.0 W/kg)** for general population / uncontrolled exposure is specified in FCC 47 CFR part 2 (2.1093) and ANSI/IEEE C95.1-1992.

2. Description of Equipment Under Test

EUT Type	Phablet
FCC ID	SMFE6T
Brand Name	Malata
Model Name	E6T
Tx Frequency Bands (Unit: MHz)	GSM850 : 824.2 ~ 848.8 GSM1900 : 1850.2 ~ 1909.8 WCDMA Band II : 1852.4 ~ 1907.6 WCDMA Band V : 826.4 ~ 846.6 WLAN : 2412 ~ 2462, 5180 ~ 5240, 5260 ~ 5320, 5745 ~ 5825 Bluetooth : 2402 ~ 2480
Uplink Modulations	GSM & GPRS : GMSK EDGE : 8PSK WCDMA : QPSK 802.11b : DSSS 802.11a/g/n : OFDM Bluetooth : GFSK, 8-DPSK, LE
Maximum Tune-up Conducted Power (Unit: dBm)	GSM850 : 32.5 GSM1900 : 29.0 WCDMA Band II : 22.5 WCDMA Band V : 23.0 WLAN 2.4G : 15.0 WLAN 5.2G : 12.0 WLAN 5.3G : 12.0 WLAN 5.8G : 10.5 Bluetooth : 7.5
Antenna Type	Fixed Internal Antenna
EUT Stage	Production Unit

Note:

1. The above EUT information is declared by manufacturer and for more detailed features description please refers to the manufacturer's specifications or User's Manual.

List of Accessory:

Battery	**Brand Name**	zhongkelaifang
	Model Name	SPP416380-001
	Power Rating	3.8Vdc, 3000mAh
	Type	polymer

3. SAR Measurement System

3.1 Definition of Specific Absorption Rate (SAR)

SAR is related to the rate at which energy is absorbed per unit mass in an object exposed to a radio field. The SAR distribution in a biological body is complicated and is usually carried out by experimental techniques or numerical modeling. The standard recommends limits for two tiers of groups, occupational/controlled and general population/uncontrolled, based on a person's awareness and ability to exercise control over his or her exposure. In general, occupational/controlled exposure limits are higher than the limits for general population/uncontrolled.

The SAR definition is the time derivative (rate) of the incremental energy (dW) absorbed by (dissipated in) an incremental mass (dm) contained in a volume element (dv) of a given density (ρ). The equation description is as below:

$$\mathbf{SAR} = \frac{\mathbf{d}}{\mathbf{dt}}\left(\frac{\mathbf{dW}}{\mathbf{dm}}\right) = \frac{\mathbf{d}}{\mathbf{dt}}\left(\frac{\mathbf{dW}}{\boldsymbol{\rho}\mathbf{dv}}\right)$$

SAR is expressed in units of Watts per kilogram (W/kg)

SAR measurement can be related to the electrical field in the tissue by

$$\mathbf{SAR} = \frac{\boldsymbol{\sigma}|\mathbf{E}|^2}{\boldsymbol{\rho}}$$

Where: σ is the conductivity of the tissue, ρ is the mass density of the tissue and E is the RMS electrical field strength.

3.2 SPEAG DASY System

DASY system consists of high precision robot, probe alignment sensor, phantom, robot controller, controlled measurement server and near-field probe. The robot includes six axes that can move to the precision position of the DASY5 software defined. The DASY software can define the area that is detected by the probe. The robot is connected to controlled box. Controlled measurement server is connected to the controlled robot box. The DAE includes amplifier, signal multiplexing, AD converter, offset measurement and surface detection. It is connected to the Electro-optical coupler (ECO). The ECO performs the conversion form the optical into digital electric signal of the DAE and transfers data to the PC.

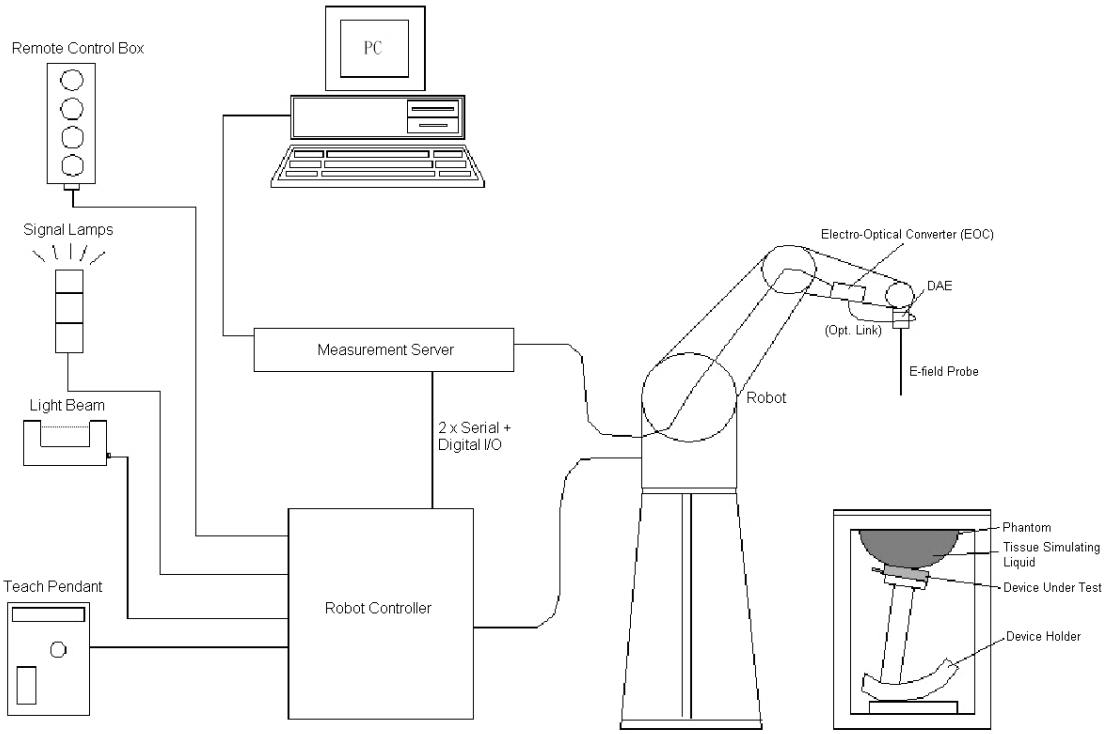

Fig-3.1 DASY System Setup

3.2.1 Robot

The DASY system uses the high precision robots from Stäubli SA (France). For the 6-axis controller system, the robot controller version (DASY5: CS8c) from Stäubli is used. The Stäubli robot series have many features that are important for our application:

- High precision (repeatability ±0.035 mm)
- High reliability (industrial design)
- Jerk-free straight movements
- Low ELF interference (the closed metallic construction shields against motor control fields)

Fig-3.2 DASY5

3.2.2 Probes

The SAR measurement is conducted with the dosimetric probe. The probe is specially designed and calibrated for use in liquid with high permittivity. The dosimetric probe has special calibration in liquid at different frequency.

Model	EX3DV4	
Construction	Symmetrical design with triangular core. Built-in shielding against static charges. PEEK enclosure material (resistant to organic solvents, e.g., DGBE).	
Frequency	10 MHz to 6 GHz Linearity: ± 0.2 dB	
Directivity	± 0.3 dB in HSL (rotation around probe axis) ± 0.5 dB in tissue material (rotation normal to probe axis)	
Dynamic Range	10 µW/g to 100 mW/g Linearity: ± 0.2 dB (noise: typically < 1 µW/g)	
Dimensions	Overall length: 337 mm (Tip: 20 mm) Tip diameter: 2.5 mm (Body: 12 mm) Typical distance from probe tip to dipole centers: 1 mm	

Model	ES3DV3	
Construction	Symmetrical design with triangular core. Interleaved sensors. Built-in shielding against static charges. PEEK enclosure material (resistant to organic solvents, e.g., DGBE).	
Frequency	10 MHz to 4 GHz Linearity: ± 0.2 dB	
Directivity	± 0.2 dB in HSL (rotation around probe axis) ± 0.3 dB in tissue material (rotation normal to probe axis)	
Dynamic Range	5 µW/g to 100 mW/g Linearity: ± 0.2 dB	
Dimensions	Overall length: 337 mm (Tip: 20 mm) Tip diameter: 3.9 mm (Body: 12 mm) Distance from probe tip to dipole centers: 2.0 mm	

3.2.3 Data Acquisition Electronics (DAE)

Model	DAE3, DAE4	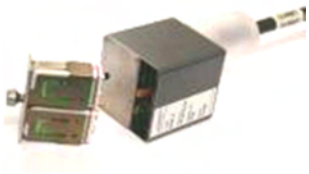
Construction	Signal amplifier, multiplexer, A/D converter and control logic. Serial optical link for communication with DASY embedded system (fully remote controlled). Two step probe touch detector for mechanical surface detection and emergency robot stop.	
Measurement Range	-100 to +300 mV (16 bit resolution and two range settings: 4mV, 400mV)	
Input Offset Voltage	< 5µV (with auto zero)	
Input Bias Current	< 50 fA	
Dimensions	60 x 60 x 68 mm	

3.2.4 Phantoms

Model	Twin SAM	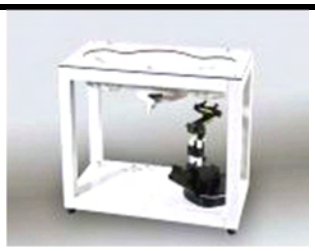
Construction	The shell corresponds to the specifications of the Specific Anthropomorphic Mannequin (SAM) phantom defined in IEEE 1528 and IEC 62209-1. It enables the dosimetric evaluation of left and right hand phone usage as well as body mounted usage at the flat phantom region. A cover prevents evaporation of the liquid. Reference markings on the phantom allow the complete setup of all predefined phantom positions and measurement grids by teaching three points with the robot.	
Material	Vinylester, glass fiber reinforced (VE-GF)	
Shell Thickness	2 ± 0.2 mm (6 ± 0.2 mm at ear point)	
Dimensions	Length: 1000 mm Width: 500 mm Height: adjustable feet	
Filling Volume	approx. 25 liters	

Model	ELI	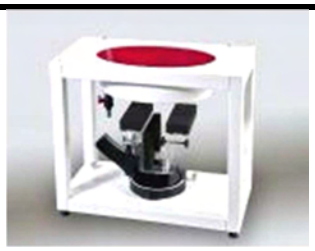
Construction	Phantom for compliance testing of handheld and body-mounted wireless devices in the frequency range of 30 MHz to 6 GHz. ELI is fully compatible with the IEC 62209-2 standard and all known tissue simulating liquids. ELI has been optimized regarding its performance and can be integrated into our standard phantom tables. A cover prevents evaporation of the liquid. Reference markings on the phantom allow installation of the complete setup, including all predefined phantom positions and measurement grids, by teaching three points. The phantom is compatible with all SPEAG dosimetric probes and dipoles.	
Material	Vinylester, glass fiber reinforced (VE-GF)	
Shell Thickness	2.0 ± 0.2 mm (bottom plate)	
Dimensions	Major axis: 600 mm Minor axis: 400 mm	
Filling Volume	approx. 30 liters	

3.2.5 Device Holder

Model	Mounting Device	
Construction	In combination with the Twin SAM Phantom or ELI4, the Mounting Device enables the rotation of the mounted transmitter device in spherical coordinates. Rotation point is the ear opening point. Transmitter devices can be easily and accurately positioned according to IEC, IEEE, FCC or other specifications. The device holder can be locked for positioning at different phantom sections (left head, right head, flat).	
Material	POM	

Model	Laptop Extensions Kit	
Construction	Simple but effective and easy-to-use extension for Mounting Device that facilitates the testing of larger devices according to IEC 62209-2 (e.g., laptops, cameras, etc.). It is lightweight and fits easily on the upper part of the Mounting Device in place of the phone positioner.	
Material	POM, Acrylic glass, Foam	

3.2.6 System Validation Dipoles

Model	D-Serial	
Construction	Symmetrical dipole with l/4 balun. Enables measurement of feed point impedance with NWA. Matched for use near flat phantoms filled with tissue simulating solutions.	
Frequency	750 MHz to 5800 MHz	
Return Loss	> 20 dB	
Power Capability	> 100 W (f < 1GHz), > 40 W (f > 1GHz)	

3.2.7 Tissue Simulating Liquids

For SAR measurement of the field distribution inside the phantom, the phantom must be filled with homogeneous tissue simulating liquid to a depth of at least 15 cm. For head SAR testing, the liquid height from the ear reference point (ERP) of the phantom to the liquid top surface is larger than 15 cm. For body SAR testing, the liquid height from the center of the flat phantom to the liquid top surface is larger than 15 cm. The nominal dielectric values of the tissue simulating liquids in the phantom and the tolerance of 5% are listed in Table-3.1.

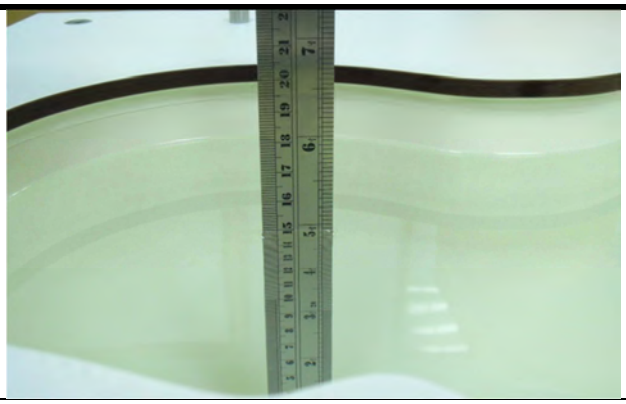	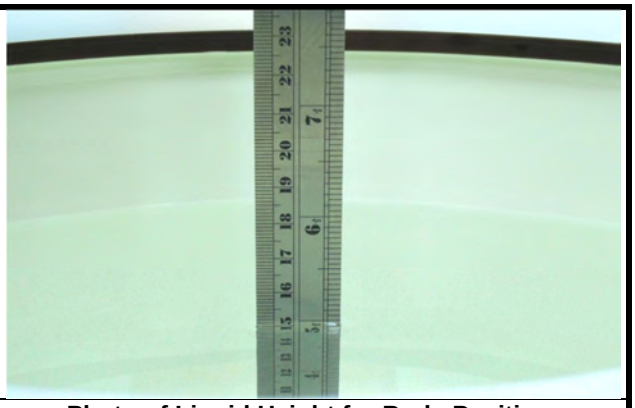
Photo of Liquid Height for Head Position	**Photo of Liquid Height for Body Position**

The dielectric properties of the head tissue simulating liquids are defined in IEEE 1528, and KDB 865664 D01 Appendix A. For the body tissue simulating liquids, the dielectric properties are defined in KDB 865664 D01 Appendix A. The dielectric properties of the tissue simulating liquids were verified prior to the SAR evaluation using a dielectric assessment kit and a network analyzer.

Table-3.1 Targets of Tissue Simulating Liquid

Frequency (MHz)	Target Permittivity	Range of ±5%	Target Conductivity	Range of ±5%
For Head				
750	41.9	39.8 ~ 44.0	0.89	0.85 ~ 0.93
835	41.5	39.4 ~ 43.6	0.90	0.86 ~ 0.95
900	41.5	39.4 ~ 43.6	0.97	0.92 ~ 1.02
1450	40.5	38.5 ~ 42.5	1.20	1.14 ~ 1.26
1640	40.3	38.3 ~ 42.3	1.29	1.23 ~ 1.35
1750	40.1	38.1 ~ 42.1	1.37	1.30 ~ 1.44
1800	40.0	38.0 ~ 42.0	1.40	1.33 ~ 1.47
1900	40.0	38.0 ~ 42.0	1.40	1.33 ~ 1.47
2000	40.0	38.0 ~ 42.0	1.40	1.33 ~ 1.47
2300	39.5	37.5 ~ 41.5	1.67	1.59 ~ 1.75
2450	39.2	37.2 ~ 41.2	1.80	1.71 ~ 1.89
2600	39.0	37.1 ~ 41.0	1.96	1.86 ~ 2.06
3500	37.9	36.0 ~ 39.8	2.91	2.76 ~ 3.06
5200	36.0	34.2 ~ 37.8	4.66	4.43 ~ 4.89
5300	35.9	34.1 ~ 37.7	4.76	4.52 ~ 5.00
5500	35.6	33.8 ~ 37.4	4.96	4.71 ~ 5.21
5600	35.5	33.7 ~ 37.3	5.07	4.82 ~ 5.32
5800	35.3	33.5 ~ 37.1	5.27	5.01 ~ 5.53
For Body				
750	55.5	52.7 ~ 58.3	0.96	0.91 ~ 1.01
835	55.2	52.4 ~ 58.0	0.97	0.92 ~ 1.02
900	55.0	52.3 ~ 57.8	1.05	1.00 ~ 1.10
1450	54.0	51.3 ~ 56.7	1.30	1.24 ~ 1.37
1640	53.8	51.1 ~ 56.5	1.40	1.33 ~ 1.47
1750	53.4	50.7 ~ 56.1	1.49	1.42 ~ 1.56
1800	53.3	50.6 ~ 56.0	1.52	1.44 ~ 1.60
1900	53.3	50.6 ~ 56.0	1.52	1.44 ~ 1.60
2000	53.3	50.6 ~ 56.0	1.52	1.44 ~ 1.60
2300	52.9	50.3 ~ 55.5	1.81	1.72 ~ 1.90
2450	52.7	50.1 ~ 55.3	1.95	1.85 ~ 2.05
2600	52.5	49.9 ~ 55.1	2.16	2.05 ~ 2.27
3500	51.3	48.7 ~ 53.9	3.31	3.14 ~ 3.48
5200	49.0	46.6 ~ 51.5	5.30	5.04 ~ 5.57
5300	48.9	46.5 ~ 51.3	5.42	5.15 ~ 5.69
5500	48.6	46.2 ~ 51.0	5.65	5.37 ~ 5.93
5600	48.5	46.1 ~ 50.9	5.77	5.48 ~ 6.06
5800	48.2	45.8 ~ 50.6	6.00	5.70 ~ 6.30

The following table gives the recipes for tissue simulating liquids.

Table-3.2 Recipes of Tissue Simulating Liquid

Tissue Type	Bactericide	DGBE	HEC	NaCl	Sucrose	Triton X-100	Water	Diethylene Glycol Mono-hexylether
H750	0.2	-	0.2	1.5	56.0	-	42.1	-
H835	0.2	-	0.2	1.5	57.0	-	41.1	-
H900	0.2	-	0.2	1.4	58.0	-	40.2	-
H1450	-	43.3	-	0.6	-	-	56.1	-
H1640	-	45.8	-	0.5	-	-	53.7	-
H1750	-	47.0	-	0.4	-	-	52.6	-
H1800	-	44.5	-	0.3	-	-	55.2	-
H1900	-	44.5	-	0.2	-	-	55.3	-
H2000	-	44.5	-	0.1	-	-	55.4	-
H2300	-	44.9	-	0.1	-	-	55.0	-
H2450	-	45.0	-	0.1	-	-	54.9	-
H2600	-	45.1	-	0.1	-	-	54.8	-
H3500	-	8.0	-	0.2	-	20.0	71.8	-
H5G	-	-	-	-	-	17.2	65.5	17.3
B750	0.2	-	0.2	0.8	48.8	-	50.0	-
B835	0.2	-	0.2	0.9	48.5	-	50.2	-
B900	0.2	-	0.2	0.9	48.2	-	50.5	-
B1450	-	34.0	-	0.3	-	-	65.7	-
B1640	-	32.5	-	0.3	-	-	67.2	-
B1750	-	31.0	-	0.2	-	-	68.8	-
B1800	-	29.5	-	0.4	-	-	70.1	-
B1900	-	29.5	-	0.3	-	-	70.2	-
B2000	-	30.0	-	0.2	-	-	69.8	-
B2300	-	31.0	-	0.1	-	-	68.9	-
B2450	-	31.4	-	0.1	-	-	68.5	-
B2600	-	31.8	-	0.1	-	-	68.1	-
B3500	-	28.8	-	0.1	-	-	71.1	-
B5G	-	-	-	-	-	10.7	78.6	10.7

3.3 SAR System Verification

The system check verifies that the system operates within its specifications. It is performed daily or before every SAR measurement. The system check uses normal SAR measurements in the flat section of the phantom with a matched dipole at a specified distance. The system verification setup is shown as below.

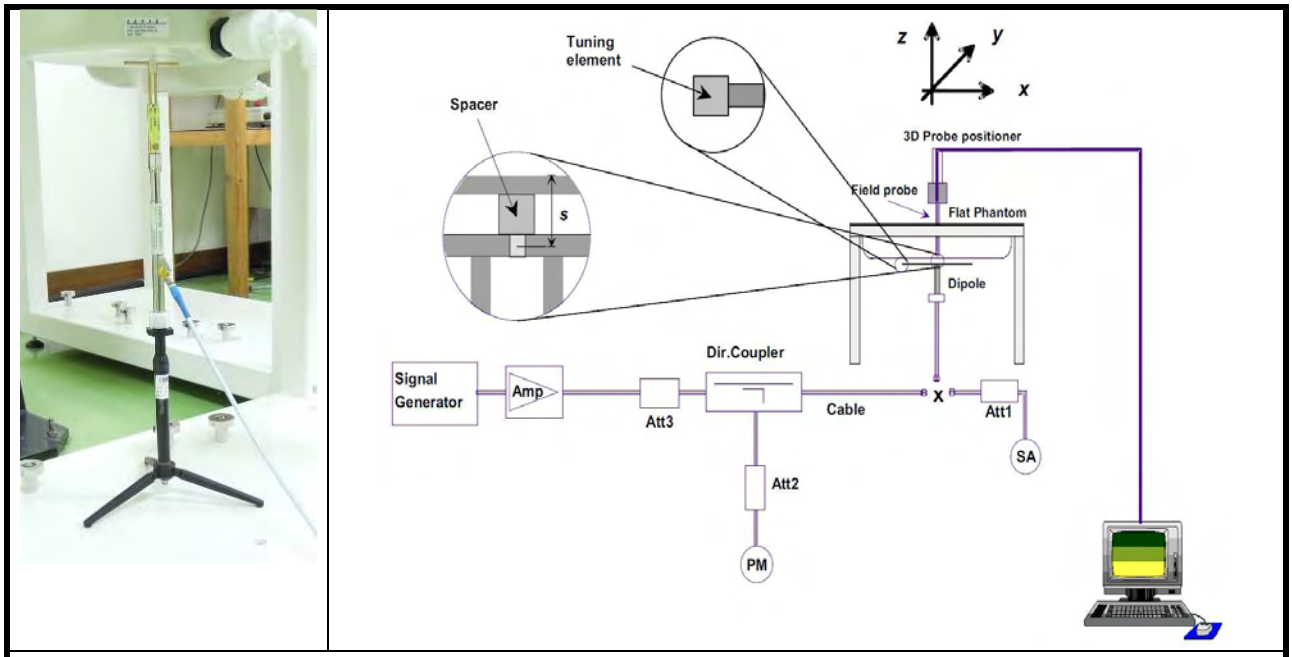

Fig-3.4 System Verification Setup

The validation dipole is placed beneath the flat phantom with the specific spacer in place. The distance spacer is touch the phantom surface with a light pressure at the reference marking and be oriented parallel to the long side of the phantom. The spectrum analyzer measures the forward power at the location of the system check dipole connector. The signal generator is adjusted for the desired forward power (250 mW is used for 700 MHz to 3 GHz, 100 mW is used for 3.5 GHz to 6 GHz) at the dipole connector and the power meter is read at that level. After connecting the cable to the dipole, the signal generator is readjusted for the same reading at power meter.

After system check testing, the SAR result will be normalized to 1W forward input power and compared with the reference SAR value derived from validation dipole certificate report. The deviation of system check should be within 10 %.

3.4 SAR Measurement Procedure

According to the SAR test standard, the recommended procedure for assessing the peak spatial-average SAR value consists of the following steps:

(a) Power reference measurement
(b) Area scan
(c) Zoom scan
(d) Power drift measurement

The SAR measurement procedures for each of test conditions are as follows:

(a) Make EUT to transmit maximum output power
(b) Measure conducted output power through RF cable
(c) Place the EUT in the specific position of phantom
(d) Perform SAR testing steps on the DASY system
(e) Record the SAR value

3.4.1 Area & Zoom Scan Procedure

First Area Scan is used to locate the approximate location(s) of the local peak SAR value(s). The measurement grid within an Area Scan is defined by the grid extent, grid step size and grid offset. Next, in order to determine the EM field distribution in a three-dimensional spatial extension, Zoom Scan is required. The Zoom Scan is performed around the highest E-field value to determine the averaged SAR-distribution over 10 g. According to KDB 865664 D01, the resolution for Area and Zoom scan is specified in the table below.

Items	<= 2 GHz	2-3 GHz	3-4 GHz	4-5 GHz	5-6 GHz
Area Scan (Δx, Δy)	<= 15 mm	<= 12 mm	<= 12 mm	<= 10 mm	<= 10 mm
Zoom Scan (Δx, Δy)	<= 8 mm	<= 5 mm	<= 5 mm	<= 4 mm	<= 4 mm
Zoom Scan (Δz)	<= 5 mm	<= 5 mm	<= 4 mm	<= 3 mm	<= 2 mm
Zoom Scan Volume	>= 30 mm	>= 30 mm	>= 28 mm	>= 25 mm	>= 22 mm

Note:

When zoom scan is required and report SAR is <= 1.4 W/kg, the zoom scan resolution of Δx / Δy (2-3GHz: <= 8 mm, 3-4GHz: <= 7 mm, 4-6GHz: <= 5 mm) may be applied.

3.4.2 Volume Scan Procedure

The volume scan is used for assess overlapping SAR distributions for antennas transmitting in different frequency bands. It is equivalent to an oversized zoom scan used in standalone measurements. The measurement volume will be used to enclose all the simultaneous transmitting antennas. For antennas transmitting simultaneously in different frequency bands, the volume scan is measured separately in each frequency band. In order to sum correctly to compute the 1g aggregate SAR, the EUT remain in the same test position for all measurements and all volume scan use the same spatial resolution and grid spacing. When all volume scan were completed, the software, SEMCAD postprocessor can combine and subsequently superpose these measurement data to calculating the multiband SAR.

3.4.3 Power Drift Monitoring

All SAR testing is under the EUT install full charged battery and transmit maximum output power. In DASY measurement software, the power reference measurement and power drift measurement procedures are used for monitoring the power drift of EUT during SAR test. Both these procedures measure the field at a specified reference position before and after the SAR testing. The software will calculate the field difference in dB. If the power drift more than 5%, the SAR will be retested.

3.4.4 Spatial Peak SAR Evaluation

The procedure for spatial peak SAR evaluation has been implemented according to the test standard. It can be conducted for 1g and 10g, as well as for user-specific masses. The DASY software includes all numerical procedures necessary to evaluate the spatial peak SAR value.

The base for the evaluation is a "cube" measurement. The measured volume must include the 1g and 10g cubes with the highest averaged SAR values. For that purpose, the center of the measured volume is aligned to the interpolated peak SAR value of a previously performed area scan.

The entire evaluation of the spatial peak values is performed within the post-processing engine (SEMCAD). The system always gives the maximum values for the 1g and 10g cubes. The algorithm to find the cube with highest averaged SAR is divided into the following stages:

(a) Extraction of the measured data (grid and values) from the Zoom Scan
(b) Calculation of the SAR value at every measurement point based on all stored data (A/D values and measurement parameters)
(c) Generation of a high-resolution mesh within the measured volume
(d) Interpolation of all measured values form the measurement grid to the high-resolution grid
(e) Extrapolation of the entire 3-D field distribution to the phantom surface over the distance from sensor to surface
(f) Calculation of the averaged SAR within masses of 1g and 10g

3.4.5 SAR Averaged Methods

In DASY, the interpolation and extrapolation are both based on the modified Quadratic Shepard's method. The interpolation scheme combines a least-square fitted function method and a weighted average method which are the two basic types of computational interpolation and approximation.

Extrapolation routines are used to obtain SAR values between the lowest measurement points and the inner phantom surface. The extrapolation distance is determined by the surface detection distance and the probe sensor offset. The uncertainty increases with the extrapolation distance. To keep the uncertainty within 1% for the 1 g and 10 g cubes, the extrapolation distance should not be larger than 5 mm.

4. SAR Measurement Evaluation

4.1 EUT Configuration and Setting

<Connections between EUT and System Simulator>

For WWAN SAR testing, the EUT was linked and controlled by base station emulator (Agilent E5515C is used for GSM/WCDMA/CDMA, and Anritsu MT8820C is used for LTE). Communication between the EUT and the emulator was established by air link. The distance between the EUT and the communicating antenna of the emulator is larger than 50 cm and the output power radiated from the emulator antenna is at least 30 dB smaller than the output power of EUT. The EUT was set from the emulator to radiate maximum output power during SAR testing.

<Considerations Related to GSM / GPRS / EDGE for Setup and Testing>

The maximum multi-slot capability supported by this device is as below.

1. This EUT is class B device
2. This EUT supports GPRS multi-slot class 33 (max. uplink: 4, max. downlink: 5, total timeslots: 6)
3. This EUT supports EDGE multi-slot class 33 (max. uplink: 4, max. downlink: 5, total timeslots: 6)

For GSM850 frequency band, the power control level is set to 5 for GSM mode and GPRS (GMSK: CS1), and set to 8 for EDGE (GMSK: MCS1, 8PSK: MCS9). For GSM1900 frequency band, the power control level is set to 0 for GSM mode and GPRS (GMSK: CS1), and set to 2 for EDGE (GMSK: MCS1, 8PSK: MCS9).

SAR test reduction for GPRS and EDGE modes is determined by the source-based time-averaged output power specified for production units, including tune-up tolerance. The data mode with highest specified time-averaged output power should be tested for SAR compliance in the applicable exposure conditions. For modes with the same specified maximum output power and tolerance, the higher number time-slot configuration should be tested.

<Considerations Related to WCDMA for Setup and Testing>

WCDMA Handsets Head SAR

SAR for next to the ear head exposure is measured using a 12.2 kbps RMC with TPC bits configured to all “1’s”. The 3G SAR test reduction procedure is applied to AMR configurations with 12.2 kbps RMC as the primary mode.

WCDMA Handsets Body-worn SAR

SAR for body-worn configurations is measured using a 12.2 kbps RMC with TPC bits configured to all “1’s”. The 3G SAR test reduction procedure is applied to other spreading codes and multiple $DPDCH_n$ configurations supported by the handset with 12.2 kbps RMC as the primary mode.

Handsets with Release 5 HSDPA

The 3G SAR test reduction procedure is applied to HSDPA body-worn configurations with 12.2 kbps RMC as the primary mode. Otherwise, SAR is measured for HSDPA using the HSDPA body SAR procedures in the “Release 5 HSDPA Data Devices”, for the highest reported SAR body-worn exposure configuration in 12.2 kbps RMC. Handsets with both HSDPA and HSUPA are tested according to Release 6 HSPA test procedures.

Handsets with Release 6 HSUPA

The 3G SAR test reduction procedure is applied to HSPA (HSUPA/HSDPA with RMC) body-worn configurations with

12.2 kbps RMC as the primary mode. Otherwise, SAR is measured for HSPA using the HSPA body SAR procedures in the "Release 6 HSPA Data Devices", for the highest reported body-worn exposure SAR configuration in 12.2 kbps RMC. When VOIP is applicable for next to the ear head exposure in HSPA, the 3G SAR test reduction procedure is applied to HSPA with 12.2 kbps RMC as the primary mode; otherwise, the same HSPA configuration used for body-worn measurements is tested for next to the ear head exposure.

Release 5 HSDPA Data Devices

The 3G SAR test reduction procedure is applied to body SAR with 12.2 kbps RMC as the primary mode. Otherwise, body SAR for HSDPA is measured using an FRC with H-Set 1 in Sub-test 1 and a 12.2 kbps RMC configured in Test Loop Mode 1, for the highest reported SAR configuration in 12.2 kbps RMC without HSDPA. HSDPA is configured according to the applicable UE category of a test device. The number of HS-DSCH / HS-PDSCHs, HARQ processes, minimum inter-TTI interval, transport block sizes and RV coding sequence are defined by the H-set. To maintain a consistent test configuration and stable transmission conditions, QPSK is used in the H-set for SAR testing. HS-DPCCH should be configured with a CQI feedback cycle of 4 ms and a CQI repetition factor of 2 to maintain a constant rate of active CQI slots. DPCCH and DPDCH gain factors (β_c, β_d), and HS-DPCCH power offset parameters (Δ_{ACK}, Δ_{NACK}, Δ_{CQI}) are set according to values indicated in below. The CQI value is determined by the UE category, transport block size, number of HS-PDSCHs and modulation used in the H-set.

Sub-test	β_c	β_d	β_d (SF)	β_c / β_d	β_{hs} (1)	CM (dB)(2)	MPR
1	2 / 15	15 / 15	64	2 / 15	4 / 15	0.0	0
2	12 / 15 (3)	15 / 15 (3)	64	12 / 15 (3)	24 / 15	1.0	0
3	15 / 15	8 / 15	64	15 / 8	30 / 15	1.5	0.5
4	15 / 15	4 / 15	64	15 / 4	30 / 15	1.5	0.5

Note 1: Δ_{ACK}, Δ_{NACK} and Δ_{CQI} = 8 ⇔ $A_{hs} = \beta_{hs} / \beta_c = 30 / 15 \Leftrightarrow \beta_{hs} = 30 / 15 * \beta_c$.
Note 2: CM = 1 for $\beta_c / \beta_d = 12 / 15$, $\beta_{hs} / \beta_c = 24 / 15$.
Note 3: For subtest 2 the β_c / β_d ratio of 12 / 15 for the TFC during the measurement period (TF1, TF0) is achieved by setting the signaled gain factors for the reference TFC (TF1, TF1) to $\beta_c = 11 / 15$ and $\beta_d = 15 / 15$.

Release 6 HSUPA Data Devices

The 3G SAR test reduction procedure is applied to body SAR with 12.2 kbps RMC as the primary mode. Otherwise, body SAR for HSPA is measured with E-DCH Sub-test 5, using H-Set 1 and QPSK for FRC and a 12.2 kbps RMC configured in Test Loop Mode 1 and power control algorithm 2, according to the highest reported body SAR configuration in 12.2 kbps RMC without HSPA. When VOIP applies to head exposure, the 3G SAR test reduction procedure is applied with 12.2 kbps RMC as the primary mode. Otherwise, the same HSPA configuration used for body SAR measurements are applied to head exposure testing. Due to inner loop power control requirements in HSPA, a communication test set is required for output power and SAR tests. The 12.2 kbps RMC, FRC H-set 1 and E-DCH configurations for HSPA are configured according to the β values indicated in below.

Sub-test	β_c	β_d	β_d (SF)	β_c / β_d	β_{hs} (1)	β_{ec}	β_{ed}	β_{ed} (SF)	β_{ed} (codes)	CM (2) (dB)	MPR (dB)	AG (4) Index	E-TFCI
1	11 / 15 (3)	15 / 15 (3)	64	11 / 15 (3)	22 / 15	209 / 225	1039 / 225	4	1	1.0	0.0	20	75
2	6 / 15	15 / 15	64	6 / 15	12 / 15	12 / 15	94 / 75	4	1	3.0	2.0	12	67
3	15 / 15	9 / 15	64	15 / 9	30 / 15	30 / 15	β_{ed1}: 47/15 β_{ed2}: 47/15	4	2	2.0	1.0	15	92
4	2 / 15	15 / 15	64	2 / 15	4 / 15	2 / 15	56 / 75	4	1	3.0	2.0	17	71

5	15 / 15 (4)	15 / 15 (4)	64	15 / 15 (4)	30 / 15	24 / 15	134 / 15	4	1	1.0	0.0	21	81

Note 1: Δ_{ACK}, Δ_{NACK} and Δ_{CQI} = 8 ⇔ A_{hs} = β_{hs} / β_c = 30 / 15 ⇔ β_{hs} = 30 / 15 * β_c.
Note 2: CM = 1 for β_c / β_d = 12 / 15, β_{hs} / β_c = 24 / 15. For all other combinations of DPDCH, DPCCH, HS-DPCCH, E-DPDCH and E-DPCCH the MPR is based on the relative CM difference.
Note 3: For subtest 1 the β_c / β_d ratio of 11 / 15 for the TFC during the measurement period (TF1, TF0) is achieved by setting the signaled gain factors for the reference TFC (TF1, TF1) to β_c = 10 / 15 and β_d = 15 / 15.
Note 4: For subtest 5 the β_c / β_d ratio of 15 / 15 for the TFC during the measurement period (TF1, TF0) is achieved by setting the signaled gain factors for the reference TFC (TF1, TF1) to β_c = 14 / 15 and β_d = 15 / 15.
Note 5: Testing UE using E-DPDCH Physical Layer category 1 Sub-test 3 is not required according to TS 25.306 Table 5.1g.
Note 6: β_{ed} cannot be set directly; it is set by Absolute Grant Value.

<Considerations Related to WLAN for Setup and Testing>

In general, various vendor specific external test software and chipset based internal test modes are typically used for SAR measurement. These chipset based test mode utilities are generally hardware and manufacturer dependent, and often include substantial flexibility to reconfigure or reprogram a device. A Wi-Fi device must be configured to transmit continuously at the required data rate, channel bandwidth and signal modulation, using the highest transmission duty factor supported by the test mode tools for SAR measurement. The test frequencies established using test mode must correspond to the actual channel frequencies. When 802.11 frame gaps are accounted for in the transmission, a maximum transmission duty factor of 92 - 96% is typically achievable in most test mode configurations. A minimum transmission duty factor of 85% is required to avoid certain hardware and device implementation issues related to wide range SAR scaling. In addition, a periodic transmission duty factor is required for current generation SAR systems to measure SAR correctly. The reported SAR must be scaled to 100% transmission duty factor to determine compliance at the maximum tune-up tolerance limit.

According to KDB 248227 D01, this device has installed WLAN engineering testing software which can provide continuous transmitting RF signal. During WLAN SAR testing, this device was operated to transmit continuously at the maximum transmission duty with specified transmission mode, operating frequency, lowest data rate, and maximum output power.

Initial Test Configuration

An initial test configuration is determined for OFDM transmission modes in 2.4 GHz and 5 GHz bands according to the channel bandwidth, modulation and data rate combination(s) with the highest maximum output power specified for production units in each standalone and aggregated frequency band. When the same maximum power is specified for multiple transmission modes in a frequency band, the largest channel bandwidth, lowest order modulation, lowest data rate and lowest order 802.11a/g/n/ac mode is used for SAR measurement, on the highest measured output power channel in the initial test configuration, for each frequency band.

Subsequent Test Configuration

SAR measurement requirements for the remaining 802.11 transmission mode configurations that have not been tested in the initial test configuration are determined separately for each standalone and aggregated frequency band, in each exposure condition, according to the maximum output power specified for production units. Additional power measurements may be required to determine if SAR measurements are required for subsequent highest output power channels in a subsequent test configuration. When the highest reported SAR for the initial test configuration according to the initial test position or fixed exposure position requirements, is adjusted by the ratio of the subsequent test configuration to initial test configuration specified maximum output power and the adjusted SAR is ≤ 1.2 W/kg, SAR is not required for that subsequent test configuration.

SAR Test Configuration and Channel Selection

When multiple channel bandwidth configurations in a frequency band have the same specified maximum output power, the initial test configuration is using largest channel bandwidth, lowest order modulation, lowest data rate, and lowest order 802.11 mode (i.e., 802.11a is chosen over 802.11n then 802.11ac or 802.11g is chosen over 802.11n). After an initial test configuration is determined, if multiple test channels have the same measured maximum output power, the channel chosen for SAR measurement is determined according to the following.

1) The channel closest to mid-band frequency is selected for SAR measurement.

2) For channels with equal separation from mid-band frequency; for example, high and low channels or two mid-band channels, the higher frequency (number) channel is selected for SAR measurement.

Test Reduction for U-NII-1 (5.2 GHz) and U-NII-2A (5.3 GHz) Bands

For devices that operate in both U-NII bands using the same transmitter and antenna(s), SAR test reduction is determined according to the following.

1) When the same maximum output power is specified for both bands, begin SAR measurement in U-NII-2A band by applying the OFDM SAR requirements. If the highest reported SAR for a test configuration is ≤ 1.2 W/kg, SAR is not required for U-NII-1 band for that configuration (802.11 mode and exposure condition).

2) When different maximum output power is specified for the bands, begin SAR measurement in the band with higher specified maximum output power. The highest reported SAR for the tested configuration is adjusted by the ratio of lower to higher specified maximum output power for the two bands. When the adjusted SAR is ≤ 1.2 W/kg, SAR is not required for the band with lower maximum output power in that test configuration.

4.2 EUT Testing Position

According to KDB 648474 D04, handsets are tested for SAR compliance in head, body-worn accessory and other use configurations described in the following subsections.

4.2.1 Head Exposure Conditions

Head exposure is limited to next to the ear voice mode operations. Head SAR compliance is tested according to the test positions defined in IEEE Std 1528-2003 using the SAM phantom illustrated as below.

1. Define two imaginary lines on the handset

(a) The vertical centerline passes through two points on the front side of the handset - the midpoint of the width w_t of the handset at the level of the acoustic output, and the midpoint of the width w_b of the bottom of the handset.

(b) The horizontal line is perpendicular to the vertical centerline and passes through the center of the acoustic output. The horizontal line is also tangential to the face of the handset at point A.

(c) The two lines intersect at point A. Note that for many handsets, point A coincides with the center of the acoustic output; however, the acoustic output may be located elsewhere on the horizontal line. Also note that the vertical centerline is not necessarily parallel to the front face of the handset, especially for clamshell handsets, handsets with flip covers, and other irregularly shaped handsets.

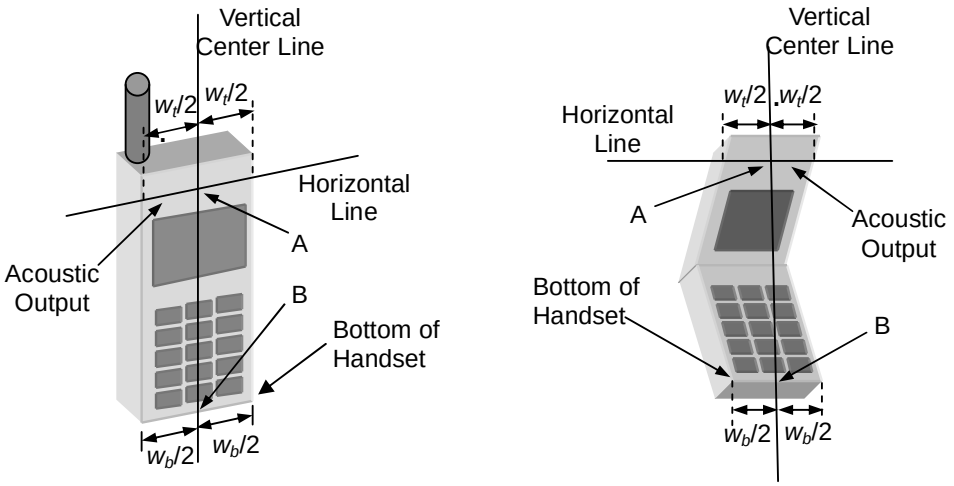

Fig-4.1 Illustration for Handset Vertical and Horizontal Reference Lines

2. Cheek Position

(a) To position the device with the vertical center line of the body of the device and the horizontal line crossing the center piece in a plane parallel to the sagittal plane of the phantom. While maintaining the device in this plane, align the vertical center line with the reference plane containing the three ear and mouth reference point (M: Mouth, RE: Right Ear, and LE: Left Ear) and align the center of the ear piece with the line RE-LE.

(b) To move the device towards the phantom with the ear piece aligned with the line LE-RE until the phone touched the ear. While maintaining the device in the reference plane and maintaining the phone contact with the ear, move the bottom of the phone until any point on the front side is in contact with the cheek of the phantom or until contact with the ear is lost (see Fig-4.2).

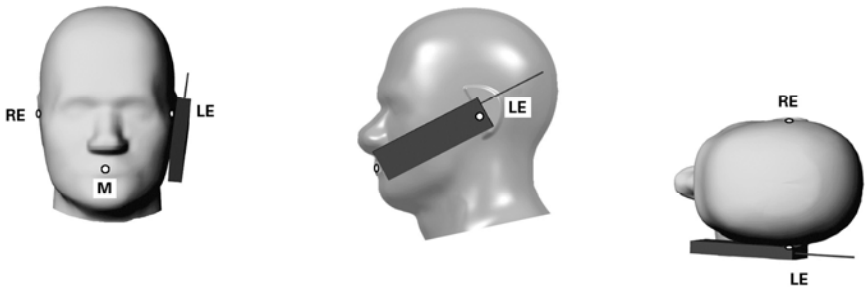

Fig-4.2 Illustration for Cheek Position

3. Tilted Position

(a) To position the device in the “cheek” position described above.

(b) While maintaining the device the reference plane described above and pivoting against the ear, moves it outward away from the mouth by an angle of 15 degrees or until contact with the ear is lost (see Fig-4.3).

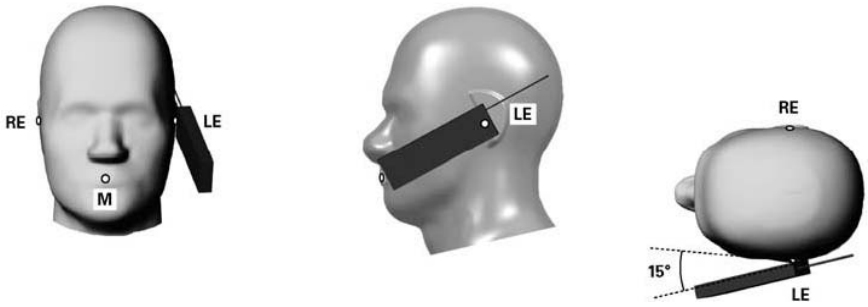

Fig-4.3 Illustration for Tilted Position

4.2.2 Body-worn Accessory Exposure Conditions

Body-worn accessory exposure is typically related to voice mode operations when handsets are carried in body-worn accessories. The body-worn accessory procedures in KDB 447498 D01 are used to test for body-worn accessory SAR compliance, without a headset connected to it. This enables the test results for such configuration to be compatible with that required for hotspot mode when the body-worn accessory test separation distance is greater than or equal to that required for hotspot mode. When the reported SAR for a body-worn accessory, measured without a headset connected to the handset, is > 1.2 W/kg, the highest reported SAR configuration for that wireless mode and frequency band should be repeated for that body-worn accessory with a headset attached to the handset.

Body-worn accessories that do not contain metallic or conductive components may be tested according to worst-case exposure configurations, typically according to the smallest test separation distance required for the group of body-worn accessories with similar operating and exposure characteristics. All body-worn accessories containing metallic components are tested in conjunction with the host device.

Body-worn accessory SAR compliance is based on a single minimum test separation distance for all wireless and operating modes applicable to each body-worn accessory used by the host, and according to the relevant voice and/or data mode transmissions and operations. If a body-worn accessory supports voice only operations in its normal and expected use conditions, testing of data mode for body-worn compliance is not required.

A conservative minimum test separation distance for supporting off-the-shelf body-worn accessories that may be acquired by users of consumer handsets is used to test for body-worn accessory SAR compliance. This distance is determined by the handset manufacturer, according to the requirements of Supplement C 01-01. Devices that are designed to operate on the body of users using lanyards and straps, or without requiring additional body-worn accessories, will be tested using a conservative minimum test separation distance <= 5 mm to support compliance.

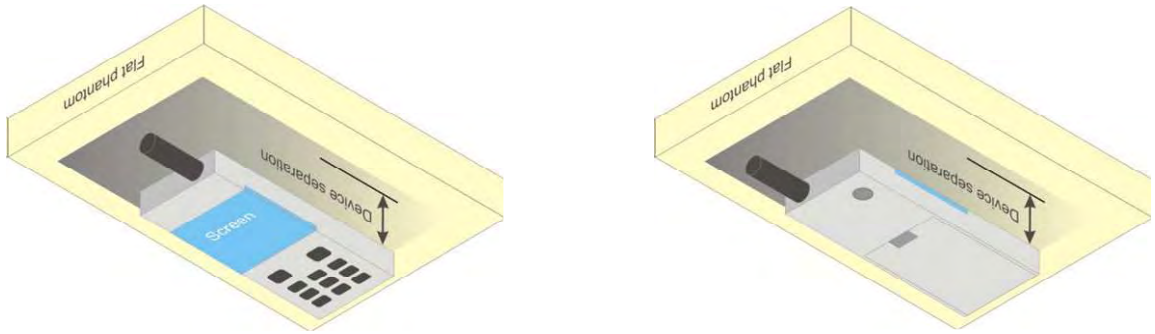

Fig-4.4 Illustration for Body Worn Position

4.2.1 Hotspot Mode Exposure Conditions

For handsets that support hotspot mode operations, with wireless router capabilities and various web browsing functions, the relevant hand and body exposure conditions are tested according to the hotspot SAR procedures in KDB 941225 D06. A test separation distance of 10 mm is required between the phantom and all surfaces and edges with a transmitting antenna located within 25 mm from that surface or edge. When the form factor of a handset is smaller than 9 cm x 5 cm, a test separation distance of 5 mm (instead of 10 mm) is required for testing hotspot mode. When the separation distance required for body-worn accessory testing is larger than or equal to that tested for hotspot mode, in the same wireless mode and for the same surface of the phone, the hotspot mode SAR data may be used to support body-worn accessory SAR compliance for that particular configuration (surface).

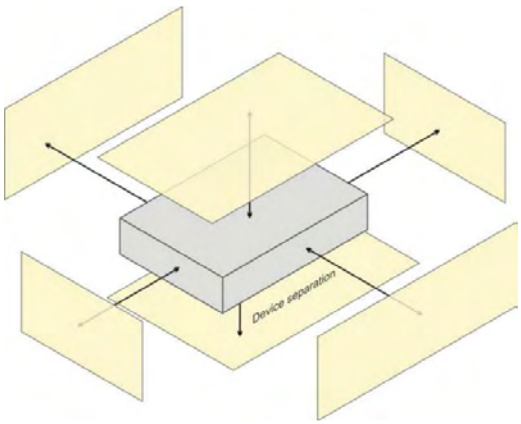

Based on the antenna location shown on appendix D of this report, the SAR testing required for hotspot mode is listed as below.

Antenna	Front Face	Rear Face	Left Side	Right Side	Top Side	Bottom Side
WWAN Ant	V	V	V	V		V
WLAN / BT	V	V	V		V	

4.2.3 Extremity Exposure Conditions

For smart phones with a display diagonal dimension > 15 cm or an overall diagonal dimension > 16 cm that provide similar mobile web access and multimedia support found in mini-tablets or UMPC mini-tablets that support voice calls next to the ear, the following phablet procedures should be applied to evaluate SAR compliance for each applicable wireless modes and frequency band. Devices marketed as phablets, regardless of form factors and operating characteristics must be tested as a phablet to determine SAR compliance.

1. The normally required head and body-worn accessory SAR test procedures for handsets, including hotspot mode, must be applied.
2. The UMPC mini-tablet procedures must also be applied to test the SAR of all surfaces and edges with an antenna located at <= 25 mm from that surface or edge, in direct contact with a flat phantom, for 10-g extremity SAR according to the body-equivalent tissue dielectric parameters in KDB 865664 to address interactive hand use exposure conditions. The UMPC mini-tablet 1-g SAR at 5 mm is not required. When hotspot mode applies, 10-g extremity SAR is required only for the surfaces and edges with hotspot mode 1-g SAR > 1.2 W/kg. The normal tablet procedures in KDB 616217 are required when the over diagonal dimension of the device is > 20 cm. Hotspot mode SAR is not required when normal tablet procedures are applied. Extremity 10-g SAR is also not required for the front (top) surface of large form factor full size tablets. The more conservative tablet SAR results can be used to support the 10-g extremity SAR for phablet mode.
3. The simultaneous transmission operating configurations applicable to voice and data transmissions for both phone and mini-tablet modes must be taken into consideration separately for 1-g and 10-g SAR to determine the simultaneous transmission SAR test exclusion and measurement requirements for the relevant wireless modes and exposure conditions.

4.2.4 SAR Test Exclusion Evaluations

According to KDB 447498 D01, the SAR test exclusion condition is based on source-based time-averaged maximum conducted output power, adjusted for tune-up tolerance, and the minimum test separation distance required for the exposure conditions. The SAR exclusion threshold is determined by the following formula.

$$\frac{\mathbf{Max.\ Tune\ up\ Power_{(mW)}}}{\mathbf{Min.\ Test\ Separation\ Distance_{(mm)}}} \times \sqrt{\mathbf{f_{(GHz)}}} \leq 3.0 \text{ for SAR-1g, } \leq 7.5 \text{ for SAR-10g}$$

When the minimum test separation distance is < 5 mm, a distance of 5 mm is applied to determine SAR test exclusion.

Mode	Max. Tune-up Power (dBm)	Max. Tune-up Power (mW)	Body-Worn		
			Ant. to Surface (mm)	Calculated Result	Require SAR Testing?
WLAN 5.8G	10.5	11.22	10	2.7	No

Mode	Max. Tune-up Power (dBm)	Max. Tune-up Power (mW)	Body-Worn			Extremity		
			Ant. to Surface (mm)	Calculated Result	Require SAR Testing?	Ant. to Surface (mm)	Calculated Result	Require SAR Testing?
BT (2.48 GHz)	7.5	5.62	10	0.9	No	5	1.8	No

Note:

1. When separation distance <= 50 mm and the calculated result shown in above table is <= 3.0 for SAR-1g exposure condition, or <= 7.5 for SAR-10g exposure condition, the SAR testing exclusion is applied.

4.2.2 Simultaneous Transmission Possibilities

The simultaneous transmission possibilities for this device are listed as below.

Simultaneous TX Combination	Capable Transmit Configurations	Head (Voice)	Body-worn (Voice)	Hotspot (Data)	Extremity (Data)
1	GSM850 (Voice / Data) + WLAN (Data)	Yes	Yes	Yes	Yes
2	GSM1900 (Voice / Data) + WLAN (Data)	Yes	Yes	Yes	Yes
3	WCDMA II (Voice / Data) + WLAN (Data)	Yes	Yes	Yes	Yes
4	WCDMA V (Voice / Data) + WLAN (Data)	Yes	Yes	Yes	Yes
5	GSM850 (Voice / Data) + BT (Data)	No	Yes	No	Yes
6	GSM1900 (Voice / Data) + BT (Data)	No	Yes	No	Yes
7	WCDMA II (Voice / Data) + BT (Data)	No	Yes	No	Yes
8	WCDMA V (Voice / Data) + BT (Data)	No	Yes	No	Yes

Note :

1. The 2.4G WLAN and 5G WLAN cannot transmit simultaneously.
2. The WLAN and Bluetooth cannot transmit simultaneously, so there is no co-location test requirement for WLAN and Bluetooth.
3. Only 2.4G WLAN (802.11b/g/n) supports wireless hotspot capability. 5G WLAN (802.11a/n/ac) does not support wireless hotspot mode.

4.3 Tissue Verification

The measuring results for tissue simulating liquid are shown as below.

Test Date	Tissue Type	Frequency (MHz)	Liquid Temp. (℃)	Measured Conductivity (σ)	Measured Permittivity (ε_r)	Target Conductivity (σ)	Target Permittivity (ε_r)	Conductivity Deviation (%)	Permittivity Deviation (%)
Dec. 03, 2015	H850	835	21.2	0.890	41.410	0.90	41.50	-1.11	-0.22
Dec. 03, 2015	H1900	1900	21.2	1.441	39.728	1.40	40.00	2.93	-0.68
Dec. 07, 2015	H2450	2450	20.8	1.832	38.661	1.80	39.20	1.78	-1.38
Dec. 07, 2015	H5G	5250	20.8	4.721	36.359	4.71	35.90	0.23	1.28
Dec. 07, 2015	H5G	5800	20.8	5.273	35.577	5.27	35.30	0.06	0.78
Dec. 04, 2015	B850	835	20.9	0.978	55.648	0.97	55.20	0.82	0.81
Dec. 04, 2015	B1900	1900	20.9	1.561	54.788	1.52	53.30	2.70	2.79
Dec. 08, 2015	B2450	2450	21.2	1.906	51.411	1.95	52.70	-2.26	-2.45
Dec. 08, 2015	B5G	5250	21.2	5.379	48.856	5.36	48.90	0.35	-0.09
Dec. 08, 2015	B5G	5800	21.2	6.123	47.668	6.00	48.20	2.05	-1.10

Note:

The dielectric properties of the tissue simulating liquid must be measured within 24 hours before the SAR testing and within ±5% of the target values. Liquid temperature during the SAR testing must be within ±2 ℃.

4.4 System Validation

The SAR measurement system was validated according to procedures in KDB 865664 D01. The validation status in tabulated summary is as below.

Test Date	Probe S/N	Calibration Point		Measured Conductivity (σ)	Measured Permittivity (ε_r)	Validation for CW			Validation for Modulation		
						Sensitivity Range	Probe Linearity	Probe Isotropy	Modulation Type	Duty Factor	PAR
Dec. 03, 2015	3873	Head	835	0.890	41.410	Pass	Pass	Pass	GMSK	Pass	N/A
Dec. 03, 2015	3873	Head	1900	1.441	39.728	Pass	Pass	Pass	GMSK	Pass	N/A
Dec. 07, 2015	3873	Head	2450	1.832	38.661	Pass	Pass	Pass	OFDM	N/A	Pass
Dec. 07, 2015	3873	Head	5250	4.721	36.359	Pass	Pass	Pass	OFDM	N/A	Pass
Dec. 07, 2015	3873	Head	5800	5.273	35.577	Pass	Pass	Pass	OFDM	N/A	Pass
Dec. 04, 2015	3873	Body	835	0.978	55.648	Pass	Pass	Pass	GMSK	Pass	N/A
Dec. 04, 2015	3873	Body	1900	1.561	54.788	Pass	Pass	Pass	GMSK	Pass	N/A
Dec. 08, 2015	3873	Body	2450	1.906	51.411	Pass	Pass	Pass	OFDM	N/A	Pass
Dec. 08, 2015	3873	Body	5250	5.379	48.856	Pass	Pass	Pass	OFDM	N/A	Pass
Dec. 08, 2015	3873	Body	5800	6.123	47.668	Pass	Pass	Pass	OFDM	N/A	Pass

4.5 System Verification

The measuring result for system verification is tabulated as below.

Test Date	Mode	Frequency (MHz)	1W Target SAR-1g (W/kg)	Measured SAR-1g (W/kg)	Normalized to 1W SAR-1g (W/kg)	Deviation (%)	Dipole S/N	Probe S/N	DAE S/N
Dec. 03, 2015	Head	835	9.11	2.34	9.36	2.74	4d139	3873	1341
Dec. 03, 2015	Head	1900	40.70	9.93	39.72	-2.41	5d159	3873	1341
Dec. 07, 2015	Head	2450	53.00	12.80	51.20	-3.40	893	3873	1341
Dec. 07, 2015	Head	5250	82.60	7.93	79.30	-4.00	1133	3873	1341
Dec. 07, 2015	Head	5800	81.80	7.63	76.30	-6.72	1133	3873	1341
Dec. 04, 2015	Body	835	9.28	2.28	9.12	-1.72	4d139	3873	1341
Dec. 04, 2015	Body	1900	40.00	9.37	37.48	-6.30	5d159	3873	1341
Dec. 08, 2015	Body	2450	51.10	12.60	50.40	-1.37	893	3873	1341
Dec. 08, 2015	Body	5250	75.50	7.44	74.40	-1.46	1133	3873	1341
Dec. 08, 2015	Body	5800	76.90	7.50	75.00	-2.47	1133	3873	1341

Note:

Comparing to the reference SAR value provided by SPEAG, the validation data should be within its specification of 10 %. The result indicates the system check can meet the variation criterion and the plots can be referred to Appendix A of this report.

4.6 Maximum Output Power

4.6.1 Maximum Conducted Power

The maximum conducted average power (Unit: dBm) including tune-up tolerance is shown as below.

Mode	GSM850	GSM1900
GSM (GMSK, 1Tx-slot)	32.5	29.0
GPRS (GMSK, 1Tx-slot)	32.5	29.0
GPRS (GMSK, 2Tx-slot)	32.5	29.0
GPRS (GMSK, 3Tx-slot)	31.5	28.0
GPRS (GMSK, 4Tx-slot)	27.5	24.0
EDGE (8PSK, 1Tx-slot)	27.0	25.0
EDGE (8PSK, 2Tx-slot)	27.0	25.0
EDGE (8PSK, 3Tx-slot)	26.0	24.0
EDGE (8PSK, 4Tx-slot)	25.0	23.0

Mode	WCDMA Band II	WCDMA Band V
RMC 12.2K	22.5	23.0

Mode	2.4G WLAN	5.2G WLAN	5.3G WLAN	5.8G WLAN
802.11b	15.0	N/A	N/A	N/A
802.11g	15.0	N/A	N/A	N/A
802.11a	N/A	12.0	12.0	10.5
802.11n HT20	13.0	11.0	11.0	9.5
802.11n HT40	N/A	11.5	11.0	9.5

Mode	2.4G Bluetooth
GFSK	7.5
8-DPSK	3.0
LE	6.5

4.6.2 Measured Conducted Power Result

The measuring conducted average power (Unit: dBm) is shown as below.

Band	GSM850			GSM1900		
Channel	128	189	251	512	661	810
Frequency (MHz)	824.2	836.4	848.8	1850.2	1880.0	1909.8
Maximum Burst-Averaged Output Power						
GSM (GMSK, 1Tx-slot)	31.94	**31.99**	31.86	**28.40**	28.35	28.30
GPRS (GMSK, 1Tx-slot)	31.85	31.98	31.75	28.39	28.29	28.28
GPRS (GMSK, 2Tx-slot)	31.84	31.98	31.76	28.38	28.27	28.27
GPRS (GMSK, 3Tx-slot)	31.03	31.17	30.95	27.56	27.47	27.47
GPRS (GMSK, 4Tx-slot)	26.89	27.05	26.84	23.43	23.36	23.37
EDGE (8PSK, 1Tx-slot)	26.12	26.34	26.11	24.40	24.36	24.31
EDGE (8PSK, 2Tx-slot)	26.11	26.31	26.07	24.44	24.38	24.27
EDGE (8PSK, 3Tx-slot)	25.36	25.48	25.25	23.59	23.55	23.51
EDGE (8PSK, 4Tx-slot)	24.12	24.31	24.06	22.50	22.35	22.34
Maximum Frame-Averaged Output Power						
GSM (GMSK, 1Tx-slot)	22.94	22.99	22.86	19.40	19.35	19.30
GPRS (GMSK, 1Tx-slot)	22.85	22.98	22.75	19.39	19.29	19.28
GPRS (GMSK, 2Tx-slot)	25.84	25.98	25.76	22.38	22.27	22.27
GPRS (GMSK, 3Tx-slot)	26.77	**26.91**	26.69	**23.30**	23.21	23.21
GPRS (GMSK, 4Tx-slot)	23.89	24.05	23.84	20.43	20.36	20.37
EDGE (8PSK, 1Tx-slot)	17.12	17.34	17.11	15.40	15.36	15.31
EDGE (8PSK, 2Tx-slot)	20.11	20.31	20.07	18.44	18.38	18.27
EDGE (8PSK, 3Tx-slot)	21.10	21.22	20.99	19.33	19.29	19.25
EDGE (8PSK, 4Tx-slot)	21.12	21.31	21.06	19.50	19.35	19.34

Note:

1. SAR testing was performed on the maximum frame-averaged power mode.
2. The frame-averaged power is linearly proportion to the slot number configured and it is linearly scaled the maximum burst-averaged power based on time slots. The calculated method is shown as below:
   Frame-averaged power = 10 x log (Burst-averaged power mW x Slot used / 8)
3. The configuration of time-slot for GSM has transmitting signal in one time-slot during one frame (8 time-slots).

Band	WCDMA Band II			WCDMA Band V			3GPP MPR (dB)
Channel	9262	9400	9538	4132	4182	4233	
Frequency (MHz)	1852.4	1880.0	1907.6	826.4	836.4	846.6	
RMC 12.2K	21.86	**21.88**	21.68	22.34	**22.69**	22.31	-
HSDPA Subtest-1	21.12	21.17	20.94	21.21	21.89	21.11	0
HSDPA Subtest-2	21.11	21.17	20.91	21.20	21.92	21.12	0
HSDPA Subtest-3	21.16	21.19	20.93	21.21	21.89	21.12	0.5
HSDPA Subtest-4	21.18	21.20	20.94	21.20	21.92	21.10	0.5
HSUPA Subtest-1	20.88	20.86	20.60	21.94	21.67	21.17	0
HSUPA Subtest-2	19.61	19.60	19.41	19.66	20.35	19.58	2
HSUPA Subtest-3	20.68	20.73	20.42	20.64	21.36	20.60	1
HSUPA Subtest-4	19.77	19.85	19.70	19.97	20.60	19.83	2
HSUPA Subtest-5	21.79	21.78	21.52	21.83	22.53	22.54	0

<WLAN 2.4G>

Mode	802.11b		
Channel / Frequency (MHz)	1 (2412)	6 (2437)	11 (2462)
Average Power	13.53	**14.79**	13.94
Mode	802.11g		
Channel / Frequency (MHz)	1 (2412)	6 (2437)	11 (2462)
Average Power	13.23	**14.53**	13.94
Mode	802.11n (HT20)		
Channel / Frequency (MHz)	1 (2412)	6 (2437)	11 (2462)
Average Power	11.77	**12.67**	12.35

<WLAN 5.2G>

Mode	802.11a			
Channel / Frequency (MHz)	36 (5180)	40 (5200)	44 (5220)	48 (5240)
Average Power	10.61	10.13	**11.64**	11.04
Mode	802.11n (HT20)			
Channel / Frequency (MHz)	36 (5180)	40 (5200)	44 (5220)	48 (5240)
Average Power	10.11	10.29	10.31	**10.74**
Mode	802.11n (HT40)			
Channel / Frequency (MHz)	38 (5190)		46 (5230)	
Average Power	10.32		**11.11**	

<WLAN 5.3G>

Mode	802.11a			
Channel / Frequency (MHz)	52 (5260)	56 (5280)	60 (5300)	64 (5320)
Average Power	10.50	10.42	11.13	**11.51**
Mode	802.11n (HT20)			
Channel / Frequency (MHz)	52 (5260)	56 (5280)	60 (5300)	64 (5320)
Average Power	9.94	10.35	10.49	**10.56**
Mode	802.11n (HT40)			
Channel / Frequency (MHz)	54 (5270)		62 (5310)	
Average Power	10.62		**10.77**	

<WLAN 5.8G>

Mode	802.11a				
Channel / Frequency (MHz)	149 (5745)	153 (5765)	157 (5785)	161 (5805)	165 (5825)
Average Power	9.36	**10.03**	9.32	8.90	8.83
Mode	802.11n (HT20)				
Channel / Frequency (MHz)	149 (5745)	153 (5765)	157 (5785)	161 (5805)	165 (5825)
Average Power	8.24	**8.88**	8.47	8.10	7.87
Mode	802.11n (HT40)				
Channel / Frequency (MHz)	151 (5755)		159 (5795)		
Average Power	**8.84**		8.21		

<Bluetooth>

Mode	Bluetooth GFSK		
Channel / Frequency (MHz)	**0 (2402)**	**39 (2441)**	**78 (2480)**
Average Power	6.24	6.93	**7.05**
Mode	**Bluetooth 8-DPSK**		
Channel / Frequency (MHz)	**0 (2402)**	**39 (2441)**	**78 (2480)**
Average Power	2.28	2.76	**2.81**
Mode	**Bluetooth LE**		
Channel / Frequency (MHz)	**0 (2402)**	**19 (2440)**	**39 (2480)**
Average Power	4.98	**6.30**	4.48

4.7 SAR Testing Results

4.7.1 SAR Test Reduction Considerations

<KDB 447498 D01, General RF Exposure Guidance>

Testing of other required channels within the operating mode of a frequency band is not required when the reported SAR for the mid-band or highest output power channel is:

(1) ≤ 0.8 W/kg or 2.0 W/kg, for 1-g or 10-g respectively, when the transmission band is ≤ 100 MHz

(2) ≤ 0.6 W/kg or 1.5 W/kg, for 1-g or 10-g respectively, when the transmission band is between 100 MHz and 200 MHz

(3) ≤ 0.4 W/kg or 1.0 W/kg, for 1-g or 10-g respectively, when the transmission band is ≥ 200 MHz

<KDB 941225 D01, 3G SAR Measurement Procedures>

The mode tested for SAR is referred to as the primary mode. The equivalent modes considered for SAR test reduction are denoted as secondary modes. Both primary and secondary modes must be in the same frequency band. When the maximum output power and tune-up tolerance specified for production units in a secondary mode is ≤ 1/4 dB higher than the primary mode or when the highest reported SAR of the primary mode is scaled by the ratio of specified maximum output power and tune-up tolerance of secondary to primary mode and the adjusted SAR is ≤ 1.2 W/kg, SAR measurement is not required for the secondary mode.

<KDB 248227 D01, SAR Guidance for Wi-Fi Transmitters>

(1) For handsets operating next to ear, hotspot mode or mini-tablet configurations, the initial test position procedures were applied. The test position with the highest extrapolated peak SAR will be used as the initial test position. When the reported SAR of initial test position is <= 0.4 W/kg, SAR testing for remaining test positions is not required. Otherwise, SAR is evaluated at the subsequent highest peak SAR positions until the reported SAR result is <= 0.8 W/kg or all test positions are measured.

(2) For WLAN 2.4 GHz, the highest measured maximum output power channel for DSSS was selected for SAR measurement. When the reported SAR is <= 0.8 W/kg, no further SAR testing is required. Otherwise, SAR is evaluated at the next highest measured output power channel. When any reported SAR is > 1.2 W/kg, SAR is required for the third channel. For OFDM modes (802.11g/n), SAR is not required when the highest reported SAR for DSSS is adjusted by the ratio of OFDM to DSSS specified maximum output power and it is <= 1.2 W/kg.

(3) For WLAN 5 GHz, the initial test configuration was selected according to the transmission mode with the highest maximum output power. When the reported SAR of initial test configuration is > 0.8 W/kg, SAR is required for the subsequent highest measured output power channel until the reported SAR result is <= 1.2 W/kg or all required channels are measured. For other transmission modes, SAR is not required when the highest reported SAR for initial test configuration is adjusted by the ratio of subsequent test configuration to initial test configuration specified maximum output power and it is <= 1.2 W/kg.

4.7.2 SAR Results for Head Exposure Condition

Plot No.	Band	Mode	Test Position	Ch.	Max. Tune-up Power (dBm)	Measured Conducted Power (dBm)	Power Drift (dB)	Measured SAR-1g (W/kg)	Scaling Factor	Scaled SAR-1g (W/kg)
01	GSM850	GSM	Right Cheek	189	32.5	31.99	0.03	**0.154**	1.12	**0.17**
	GSM850	GSM	Right Tilted	189	32.5	31.99	0.01	0.098	1.12	0.11
	GSM850	GSM	Left Cheek	189	32.5	31.99	0.09	0.132	1.12	0.15
	GSM850	GSM	Left Tilted	189	32.5	31.99	-0.11	0.073	1.12	0.08
	GSM1900	GSM	Right Cheek	512	29.0	28.40	0.08	0.048	1.15	0.06
	GSM1900	GSM	Right Tilted	512	29.0	28.40	0.04	0.065	1.15	0.07
02	GSM1900	GSM	Left Cheek	512	29.0	28.40	0.03	**0.08**	1.15	**0.09**
	GSM1900	GSM	Left Tilted	512	29.0	28.40	0.05	0.07	1.15	0.08
	WCDMA II	RMC12.2K	Right Cheek	9400	22.5	21.88	0.08	0.085	1.15	0.10
	WCDMA II	RMC12.2K	Right Tilted	9400	22.5	21.88	0.15	0.11	1.15	0.13
03	WCDMA II	RMC12.2K	Left Cheek	9400	22.5	21.88	0.01	**0.136**	1.15	**0.16**
	WCDMA II	RMC12.2K	Left Tilted	9400	22.5	21.88	0.09	0.108	1.15	0.12
04	WCDMA V	RMC12.2K	Right Cheek	4182	23.0	22.69	0.16	**0.143**	1.07	**0.15**
	WCDMA V	RMC12.2K	Right Tilted	4182	23.0	22.69	0.08	0.082	1.07	0.09
	WCDMA V	RMC12.2K	Left Cheek	4182	23.0	22.69	0.01	0.117	1.07	0.13
	WCDMA V	RMC12.2K	Left Tilted	4182	23.0	22.69	0.03	0.078	1.07	0.08
05	802.11b	-	Right Cheek	6	15.0	14.79	0.04	**0.225**	1.05	**0.24**
	802.11b	-	Right Tilted	6	15.0	14.79	0.08	0.217	1.05	0.23
	802.11b	-	Left Cheek	6	15.0	14.79	0.08	0.069	1.05	0.07
	802.11b	-	Left Tilted	6	15.0	14.79	0.02	0.08	1.05	0.08
06	802.11a	-	Right Cheek	64	12.0	11.51	0.08	**0.118**	1.12	**0.13**
	802.11a	-	Right Tilted	64	12.0	11.51	0.09	0.101	1.12	0.11
	802.11a	-	Left Cheek	64	12.0	11.51	0.03	0.057	1.12	0.06
	802.11a	-	Left Tilted	64	12.0	11.51	0.08	0.065	1.12	0.07
07	802.11a	-	Right Cheek	153	10.5	10.03	0.01	**0.193**	1.11	**0.22**
	802.11a	-	Right Tilted	153	10.5	10.03	-0.04	0.134	1.11	0.15
	802.11a	-	Left Cheek	153	10.5	10.03	0.00	0.124	1.11	0.14
	802.11a	-	Left Tilted	153	10.5	10.03	0.08	0.108	1.11	0.12

4.7.3 SAR Results for Body-worn Exposure Condition (Separation Distance is 1.0 cm Gap)

Plot No.	Band	Mode	Test Position	Ch.	Max. Tune-up Power (dBm)	Measured Conducted Power (dBm)	Power Drift (dB)	Measured SAR-1g (W/kg)	Scaling Factor	Scaled SAR-1g (W/kg)
	GSM850	GSM	Front Face	189	32.5	31.99	0.1	0.182	1.12	0.20
08	GSM850	GSM	Rear Face	189	32.5	31.99	0.07	**0.314**	1.12	**0.35**
	GSM1900	GSM	Front Face	512	29.0	28.40	0.04	0.16	1.15	0.18
09	GSM1900	GSM	Rear Face	512	29.0	28.40	0.12	**0.251**	1.15	**0.29**
	WCDMA II	RMC12.2K	Front Face	9400	22.5	21.88	0.05	0.297	1.15	0.34
10	WCDMA II	RMC12.2K	Rear Face	9400	22.5	21.88	-0.05	**0.435**	1.15	**0.50**
	WCDMA V	RMC12.2K	Front Face	4182	23.0	22.69	0.05	0.167	1.07	0.18
15	WCDMA V	RMC12.2K	Rear Face	4182	23.0	22.69	0.01	**0.275**	1.07	**0.30**
	802.11b	-	Front Face	6	15.0	14.79	0.02	0.046	1.05	0.05
16	802.11b	-	Rear Face	6	15.0	14.79	0.04	**0.1**	1.05	**0.10**
	802.11a	-	Front Face	64	12.0	11.51	-0.01	0.02	1.12	0.02
11	802.11a	-	Rear Face	64	12.0	11.51	0.06	**0.031**	1.12	**0.03**

4.7.4 SAR Results for Hotspot Condition (Separation Distance is 1.0 cm Gap)

Plot No.	Band	Mode	Test Position	Ch.	Max. Tune-up Power (dBm)	Measured Conducted Power (dBm)	Power Drift (dB)	Measured SAR-1g (W/kg)	Scaling Factor	Scaled SAR-1g (W/kg)
	GSM850	GPRS11	Front Face	189	31.5	31.17	-0.05	0.429	1.08	0.46
12	GSM850	GPRS11	Rear Face	189	31.5	31.17	0.09	**0.725**	1.08	**0.78**
	GSM850	GPRS11	Left Side	189	31.5	31.17	0.03	0.275	1.08	0.30
	GSM850	GPRS11	Right Side	189	31.5	31.17	-0.04	0.603	1.08	0.65
	GSM850	GPRS11	Bottom Side	189	31.5	31.17	0.02	0.396	1.08	0.43
	GSM1900	GPRS11	Front Face	512	28.0	27.56	-0.11	0.395	1.11	0.44
	GSM1900	GPRS11	Rear Face	512	28.0	27.56	-0.15	0.604	1.11	0.67
	GSM1900	GPRS11	Left Side	512	28.0	27.56	0.01	0.348	1.11	0.39
	GSM1900	GPRS11	Right Side	512	28.0	27.56	0	0.17	1.11	0.19
13	GSM1900	GPRS11	Bottom Side	512	28.0	27.56	0.02	**0.766**	1.11	**0.85**
	GSM1900	GPRS11	Bottom Side	661	28.0	27.47	0.1	0.675	1.13	0.76
	GSM1900	GPRS11	Bottom Side	810	28.0	27.47	0.11	0.602	1.13	0.68
	WCDMA II	RMC12.2K	Front Face	9400	22.5	21.88	0.05	0.297	1.15	0.34
	WCDMA II	RMC12.2K	Rear Face	9400	22.5	21.88	-0.05	0.435	1.15	0.50
	WCDMA II	RMC12.2K	Left Side	9400	22.5	21.88	0.01	0.16	1.15	0.18
	WCDMA II	RMC12.2K	Right Side	9400	22.5	21.88	-0.15	0.11	1.15	0.13
14	WCDMA II	RMC12.2K	Bottom Side	9400	22.5	21.88	0.02	**0.674**	1.15	**0.78**
	WCDMA V	RMC12.2K	Front Face	4182	23.0	22.69	0.05	0.167	1.07	0.18
15	WCDMA V	RMC12.2K	Rear Face	4182	23.0	22.69	0.01	**0.275**	1.07	**0.30**
	WCDMA V	RMC12.2K	Left Side	4182	23.0	22.69	0.03	0.181	1.07	0.19
	WCDMA V	RMC12.2K	Right Side	4182	23.0	22.69	0.13	0.254	1.07	0.27
	WCDMA V	RMC12.2K	Bottom Side	4182	23.0	22.69	-0.04	0.123	1.07	0.13
	802.11b	-	Front Face	6	15.0	14.79	0.02	0.046	1.05	0.05
16	802.11b	-	Rear Face	6	15.0	14.79	0.04	**0.1**	1.05	**0.10**
	802.11b	-	Left Side	6	15.0	14.79	0.13	0.051	1.05	0.05
	802.11b	-	Top Side	6	15.0	14.79	-0.06	0.072	1.05	0.08

4.7.5 SAR Results for Extremity Condition (Separation Distance is 0 cm Gap)

Plot No.	Band	Mode	Test Position	Ch.	Max. Tune-up Power (dBm)	Measured Conducted Power (dBm)	Power Drift (dB)	Measured SAR-1g (W/kg)	Scaling Factor	Scaled SAR-1g (W/kg)
	802.11a	-	Front Face	64	12.0	11.51	-0.07	0.055	1.12	0.06
17	802.11a	-	Rear Face	64	12.0	11.51	0.04	**0.145**	1.12	**0.16**
	802.11a	-	Left Side	64	12.0	11.51	0.04	0.027	1.12	0.03
	802.11a	-	Top Side	64	12.0	11.51	0.02	0.078	1.12	0.09
	802.11a	-	Front Face	153	10.5	10.03	0.09	0.054	1.11	0.06
18	802.11a	-	Rear Face	153	10.5	10.03	-0.05	**0.177**	1.11	**0.20**
	802.11a	-	Left Side	153	10.5	10.03	0.13	0.054	1.11	0.06
	802.11a	-	Top Side	153	10.5	10.03	0.02	0.059	1.11	0.07

4.7.6 SAR Measurement Variability

According to KDB 865664 D01, SAR measurement variability was assessed for each frequency band, which is determined by the SAR probe calibration point and tissue-equivalent medium used for the device measurements. When both head and body tissue-equivalent media are required for SAR measurements in a frequency band, the variability measurement procedures should be applied to the tissue medium with the highest measured SAR, using the highest measured SAR configuration for that tissue-equivalent medium. Alternatively, if the highest measured SAR for both head and body tissue-equivalent media are ≤ 1.45 W/kg and the ratio of these highest SAR values, i.e., largest divided by smallest value, is ≤ 1.10, the highest SAR configuration for either head or body tissue-equivalent medium may be used to perform the repeated measurement. These additional measurements are repeated after the completion of all measurements requiring the same head or body tissue-equivalent medium in a frequency band. The test device should be returned to ambient conditions (normal room temperature) with the battery fully charged before it is re-mounted on the device holder for the repeated measurement(s) to minimize any unexpected variations in the repeated results.

Since all the measured SAR are less than 0.8 W/kg, the repeated measurement is not required.

4.7.7 Simultaneous Multi-band Transmission Evaluation

<Estimated SAR Calculation>

According to KDB 447498 D01, when standalone SAR test exclusion applies to an antenna that transmits simultaneously with other antennas, the standalone SAR was estimated according to following formula to result in substantially conservative SAR values of <= 0.4 W/kg to determine simultaneous transmission SAR test exclusion.

$$\text{Estimated SAR} = \frac{\text{Max. Tune up Power}_{(\text{mW})}}{\text{Min. Test Separation Distance}_{(\text{mm})}} \times \frac{\sqrt{f_{(\text{GHz})}}}{7.5}$$

If the minimum test separation distance is < 5 mm, a distance of 5 mm is used for estimated SAR calculation. When the test separation distance is > 50 mm, the 0.4 W/kg is used for SAR-1g.

Mode / Band	Frequency (GHz)	Max. Tune-up Power (dBm)	Test Position	Separation Distance (mm)	Estimated SAR (W/kg)
BT (DSS)	2.48	7.5	Body-worn	10	0.12
BT (DSS)	2.48	7.5	Extremity	0	0.24
WLAN (NII)	5.8	10.5	Body-worn	10	0.36

Note:

1. The separation distance is determined from the outer housing of the EUT to the user.
2. When standalone SAR testing is not required, an estimated SAR can be applied to determine simultaneous transmission SAR test exclusion.

<SAR Summation Analysis>

Simultaneous transmission SAR test exclusion is determined for each operating configuration and exposure condition according to the reported standalone SAR of each applicable simultaneous transmitting antenna. When the sum of SAR_{1g} of all simultaneously transmitting antennas in an operating mode and exposure condition combination is within the SAR limit (SAR_{1g} 1.6 W/kg), the simultaneous transmission SAR is not required. When the sum of SAR_{1g} is greater than the SAR limit (SAR_{1g} 1.6 W/kg), SAR test exclusion is determined by the SPLSR.

No.	Conditions (SAR1 + SAR2)	Exposure Condition	Test Position	Max. SAR1	Max. SAR2	SAR Summation	SPLSR Analysis
1	GSM850 + WLAN (DTS)	Head	Right Cheek	0.17	0.24	0.41	∑SAR < 1.6, Not required
			Right Tilted	0.11	0.23	0.34	∑SAR < 1.6, Not required
			Left Cheek	0.15	0.07	0.22	∑SAR < 1.6, Not required
			Left Tilted	0.08	0.08	0.16	∑SAR < 1.6, Not required
		Body-Worn	Front Face	0.20	0.05	0.25	∑SAR < 1.6, Not required
			Rear Face	0.35	0.10	0.45	∑SAR < 1.6, Not required
		Hotspot	Front Face	0.46	0.05	0.51	∑SAR < 1.6, Not required
			Rear Face	0.78	0.10	0.88	∑SAR < 1.6, Not required
			Left Side	0.30	0.05	0.35	∑SAR < 1.6, Not required
			Right Side	0.65	0.00	0.65	∑SAR < 1.6, Not required
			Top Side	0.00	0.08	0.08	∑SAR < 1.6, Not required
			Bottom Side	0.43	0.00	0.43	∑SAR < 1.6, Not required
2	GSM850 + WLAN (NII)	Head	Right Cheek	0.17	0.22	0.39	∑SAR < 1.6, Not required
			Right Tilted	0.11	0.15	0.26	∑SAR < 1.6, Not required
			Left Cheek	0.15	0.14	0.29	∑SAR < 1.6, Not required
			Left Tilted	0.08	0.12	0.20	∑SAR < 1.6, Not required
		Body-Worn	Front Face	0.20	0.36	0.56	∑SAR < 1.6, Not required
			Rear Face	0.35	0.36	0.71	∑SAR < 1.6, Not required
		Extremity	Front Face	0.00	0.06	0.06	∑SAR < 1.6, Not required
			Rear Face	0.00	0.20	0.20	∑SAR < 1.6, Not required
			Left Side	0.00	0.06	0.06	∑SAR < 1.6, Not required
			Right Side	0.00	0.00	0.00	∑SAR < 1.6, Not required
			Top Side	0.00	0.09	0.09	∑SAR < 1.6, Not required
			Bottom Side	0.00	0.00	0.00	∑SAR < 1.6, Not required

No.	Conditions (SAR1 + SAR2)	Exposure Condition	Test Position	Max. SAR1	Max. SAR2	SAR Summation	SPLSR Analysis
3	GSM850 + BT (DSS)	Body	Front Face	0.20	0.12	0.32	∑SAR < 1.6, Not required
			Rear Face	0.35	0.12	0.47	∑SAR < 1.6, Not required
		Extremity	Front Face	0.00	0.24	0.24	∑SAR < 1.6, Not required
			Rear Face	0.00	0.24	0.24	∑SAR < 1.6, Not required
			Left Side	0.00	0.24	0.24	∑SAR < 1.6, Not required
			Right Side	0.00	0.24	0.24	∑SAR < 1.6, Not required
			Top Side	0.00	0.24	0.24	∑SAR < 1.6, Not required
			Bottom Side	0.00	0.24	0.24	∑SAR < 1.6, Not required

No.	Conditions (SAR1 + SAR2)	Exposure Condition	Test Position	Max. SAR1	Max. SAR2	SAR Summation	SPLSR Analysis
4	GSM1900 + WLAN (DTS)	Head	Right Cheek	0.06	0.24	0.30	∑SAR < 1.6, Not required
			Right Tilted	0.07	0.23	0.30	∑SAR < 1.6, Not required
			Left Cheek	0.09	0.07	0.16	∑SAR < 1.6, Not required
			Left Tilted	0.08	0.08	0.16	∑SAR < 1.6, Not required
		Body	Front Face	0.18	0.05	0.23	∑SAR < 1.6, Not required
			Rear Face	0.29	0.10	0.39	∑SAR < 1.6, Not required
		Hotspot	Front Face	0.44	0.05	0.49	∑SAR < 1.6, Not required
			Rear Face	0.67	0.10	0.77	∑SAR < 1.6, Not required
			Left Side	0.39	0.05	0.44	∑SAR < 1.6, Not required
			Right Side	0.19	0.00	0.19	∑SAR < 1.6, Not required
			Top Side	0.00	0.08	0.08	∑SAR < 1.6, Not required
			Bottom Side	0.85	0.00	0.85	∑SAR < 1.6, Not required
5	GSM1900 + WLAN (NII)	Head	Right Cheek	0.06	0.22	0.28	∑SAR < 1.6, Not required
			Right Tilted	0.07	0.15	0.22	∑SAR < 1.6, Not required
			Left Cheek	0.09	0.14	0.23	∑SAR < 1.6, Not required
			Left Tilted	0.08	0.12	0.20	∑SAR < 1.6, Not required
		Body	Front Face	0.18	0.36	0.54	∑SAR < 1.6, Not required
			Rear Face	0.29	0.36	0.65	∑SAR < 1.6, Not required
		Extremity	Front Face	0.00	0.06	0.06	∑SAR < 1.6, Not required
			Rear Face	0.00	0.20	0.20	∑SAR < 1.6, Not required
			Left Side	0.00	0.06	0.06	∑SAR < 1.6, Not required
			Right Side	0.00	0.00	0.00	∑SAR < 1.6, Not required
			Top Side	0.00	0.09	0.09	∑SAR < 1.6, Not required
			Bottom Side	0.00	0.00	0.00	∑SAR < 1.6, Not required
6	GSM1900 + BT (DSS)	Body	Front Face	0.18	0.12	0.30	∑SAR < 1.6, Not required
			Rear Face	0.29	0.12	0.41	∑SAR < 1.6, Not required
		Extremity	Front Face	0.00	0.24	0.24	∑SAR < 1.6, Not required
			Rear Face	0.00	0.24	0.24	∑SAR < 1.6, Not required
			Left Side	0.00	0.24	0.24	∑SAR < 1.6, Not required
			Right Side	0.00	0.24	0.24	∑SAR < 1.6, Not required
			Top Side	0.00	0.24	0.24	∑SAR < 1.6, Not required
			Bottom Side	0.00	0.24	0.24	∑SAR < 1.6, Not required

No.	Conditions (SAR1 + SAR2)	Exposure Condition	Test Position	Max. SAR1	Max. SAR2	SAR Summation	SPLSR Analysis
7	WCDMA II + WLAN (DTS)	Head	Right Cheek	0.10	0.24	0.34	∑SAR < 1.6, Not required
			Right Tilted	0.13	0.23	0.36	∑SAR < 1.6, Not required
			Left Cheek	0.16	0.07	0.23	∑SAR < 1.6, Not required
			Left Tilted	0.12	0.08	0.20	∑SAR < 1.6, Not required
		Body	Front Face	0.34	0.05	0.39	∑SAR < 1.6, Not required
			Rear Face	0.50	0.10	0.60	∑SAR < 1.6, Not required
		Hotspot	Front Face	0.34	0.05	0.39	∑SAR < 1.6, Not required
			Rear Face	0.50	0.10	0.60	∑SAR < 1.6, Not required
			Left Side	0.18	0.05	0.23	∑SAR < 1.6, Not required
			Right Side	0.13	0.00	0.13	∑SAR < 1.6, Not required
			Top Side	0.00	0.08	0.08	∑SAR < 1.6, Not required
			Bottom Side	0.78	0.00	0.78	∑SAR < 1.6, Not required
8	WCDMA II + WLAN (NII)	Head	Right Cheek	0.10	0.22	0.32	∑SAR < 1.6, Not required
			Right Tilted	0.13	0.15	0.28	∑SAR < 1.6, Not required
			Left Cheek	0.16	0.14	0.30	∑SAR < 1.6, Not required
			Left Tilted	0.12	0.12	0.24	∑SAR < 1.6, Not required
		Body	Front Face	0.34	0.36	0.70	∑SAR < 1.6, Not required
			Rear Face	0.50	0.36	0.86	∑SAR < 1.6, Not required
		Extremity	Front Face	0.00	0.06	0.06	∑SAR < 1.6, Not required
			Rear Face	0.00	0.20	0.20	∑SAR < 1.6, Not required
			Left Side	0.00	0.06	0.06	∑SAR < 1.6, Not required
			Right Side	0.00	0.00	0.00	∑SAR < 1.6, Not required
			Top Side	0.00	0.09	0.09	∑SAR < 1.6, Not required
			Bottom Side	0.00	0.00	0.00	∑SAR < 1.6, Not required
9	WCDMA II + BT (DSS)	Body	Front Face	0.34	0.12	0.46	∑SAR < 1.6, Not required
			Rear Face	0.50	0.12	0.62	∑SAR < 1.6, Not required
		Extremity	Front Face	0.00	0.24	0.24	∑SAR < 1.6, Not required
			Rear Face	0.00	0.24	0.24	∑SAR < 1.6, Not required
			Left Side	0.00	0.24	0.24	∑SAR < 1.6, Not required
			Right Side	0.00	0.24	0.24	∑SAR < 1.6, Not required
			Top Side	0.00	0.24	0.24	∑SAR < 1.6, Not required
			Bottom Side	0.00	0.24	0.24	∑SAR < 1.6, Not required

No.	Conditions (SAR1 + SAR2)	Exposure Condition	Test Position	Max. SAR1	Max. SAR2	SAR Summation	SPLSR Analysis
10	WCDMA V + WLAN (DTS)	Head	Right Cheek	0.15	0.24	0.39	∑SAR < 1.6, Not required
			Right Tilted	0.09	0.23	0.32	∑SAR < 1.6, Not required
			Left Cheek	0.13	0.07	0.20	∑SAR < 1.6, Not required
			Left Tilted	0.08	0.08	0.16	∑SAR < 1.6, Not required
		Body	Front Face	0.18	0.05	0.23	∑SAR < 1.6, Not required
			Rear Face	0.30	0.10	0.40	∑SAR < 1.6, Not required
		Hotspot	Front Face	0.18	0.05	0.23	∑SAR < 1.6, Not required
			Rear Face	0.30	0.10	0.40	∑SAR < 1.6, Not required
			Left Side	0.19	0.05	0.24	∑SAR < 1.6, Not required
			Right Side	0.27	0.00	0.27	∑SAR < 1.6, Not required
			Top Side	0.00	0.08	0.08	∑SAR < 1.6, Not required
			Bottom Side	0.13	0.00	0.13	∑SAR < 1.6, Not required
11	WCDMA V + WLAN (NII)	Head	Right Cheek	0.15	0.22	0.37	∑SAR < 1.6, Not required
			Right Tilted	0.09	0.15	0.24	∑SAR < 1.6, Not required
			Left Cheek	0.13	0.14	0.27	∑SAR < 1.6, Not required
			Left Tilted	0.08	0.12	0.20	∑SAR < 1.6, Not required
		Body	Front Face	0.18	0.36	0.54	∑SAR < 1.6, Not required
			Rear Face	0.30	0.36	0.66	∑SAR < 1.6, Not required
		Extremity	Front Face	0.00	0.06	0.06	∑SAR < 1.6, Not required
			Rear Face	0.00	0.20	0.20	∑SAR < 1.6, Not required
			Left Side	0.00	0.06	0.06	∑SAR < 1.6, Not required
			Right Side	0.00	0.00	0.00	∑SAR < 1.6, Not required
			Top Side	0.00	0.09	0.09	∑SAR < 1.6, Not required
			Bottom Side	0.00	0.00	0.00	∑SAR < 1.6, Not required
12	WCDMA V + BT (DSS)	Body	Front Face	0.18	0.12	0.30	∑SAR < 1.6, Not required
			Rear Face	0.30	0.12	0.42	∑SAR < 1.6, Not required
		Extremity	Front Face	0.00	0.24	0.24	∑SAR < 1.6, Not required
			Rear Face	0.00	0.24	0.24	∑SAR < 1.6, Not required
			Left Side	0.00	0.24	0.24	∑SAR < 1.6, Not required
			Right Side	0.00	0.24	0.24	∑SAR < 1.6, Not required
			Top Side	0.00	0.24	0.24	∑SAR < 1.6, Not required
			Bottom Side	0.00	0.24	0.24	∑SAR < 1.6, Not required

5. Calibration of Test Equipment

Equipment	Manufacturer	Model	SN	Cal. Date	Cal. Interval
System Validation Dipole	SPEAG	D835V2	4d139	Aug. 24, 2015	1 Year
System Validation Dipole	SPEAG	D1900V2	5d159	Aug. 21, 2015	1 Year
System Validation Dipole	SPEAG	D2450V2	893	Aug. 20, 2015	1 Year
System Validation Dipole	SPEAG	D5GHzV2	1133	Aug. 28, 2015	1 Year
Dosimetric E-Field Probe	SPEAG	EX3DV4	3873	Aug. 26, 2015	1 Year
Data Acquisition Electronics	SPEAG	DAE4	1341	Aug. 25, 2015	1 Year
Wireless Communication Test Set	Agilent	E5515C	MY50260600	Aug. 05, 2015	2 Years
ENA Series Network Analyzer	Agilent	E5071C	MY46214638	Sep. 07, 2015	1 Year
Spectrum Analyzer	KEYSIGHT	N9020A	MY52090163	May. 27, 2014	2 Years
MXG Analog Signal Generator	KEYSIGHT	N5183A	MY50143024	Mar. 18, 2015	1 Year
Power Meter	Agilent	N1914A	MY52180044	Aug. 28, 2014	2 Years
Power Sensor	Agilent	E9304A H18	MY52050011	Oct. 22, 2015	1 Year
Temp. & Humi. Recorder	HUATO	A2000TH	HE20107684	Jun. 25, 2015	1 Year
Electronic Thermometer	YONGFA	YF-160A	120100323	Oct. 15, 2015	1 Year
Coupler	Woken	0110A056020-10	CON27RW1A3	Sep. 18, 2015	1 Year

6. Measurement Uncertainty

Source of Uncertainty	Tolerance (± %)	Probability Distribution	Divisor	Ci (1g)	Ci (10g)	Standard Uncertainty (± %, 1g)	Standard Uncertainty (± %, 10g)	Vi
Measurement System								
Probe Calibration	6.0	Normal	1	1	1	6.0	6.0	∞
Axial Isotropy	4.7	Rectangular	√3	0.707	0.707	1.9	1.9	∞
Hemispherical Isotropy	9.6	Rectangular	√3	0.707	0.707	3.9	3.9	∞
Boundary Effect	1.0	Rectangular	√3	1	1	0.6	0.6	∞
Linearity	4.7	Rectangular	√3	1	1	2.7	2.7	∞
System Detection Limits	0.25	Rectangular	√3	1	1	0.14	0.14	∞
Readout Electronics	0.3	Normal	1	1	1	0.3	0.3	∞
Response Time	0.0	Rectangular	√3	1	1	0.0	0.0	∞
Integration Time	1.7	Rectangular	√3	1	1	1.0	1.0	∞
RF Ambient Conditions - Noise	3.0	Rectangular	√3	1	1	1.7	1.7	∞
RF Ambient Conditions - Reflections	3.0	Rectangular	√3	1	1	1.7	1.7	∞
Probe Positioner Mechanical Tolerance	0.4	Rectangular	√3	1	1	0.2	0.2	∞
Probe Positioning with Respect to Phantom Shell	2.9	Rectangular	√3	1	1	1.7	1.7	∞
Extrapolation, interpolation, and integration algorithms for max. SAR evaluation	2.0	Rectangular	√3	1	1	1.2	1.2	∞
Test Sample Related								
Test Sample Positioning	1.5 / 0.7	Normal	1	1	1	1.5	0.7	32
Device Holder Uncertainty	4.2 / 1.8	Normal	1	1	1	4.2	1.8	32
Output Power Variation - SAR Drift Measurement	5.0	Rectangular	√3	1	1	2.9	2.9	∞
Phantom and Tissue Parameters								
Phantom Uncertainty (Shape and Thickness Tolerances)	7.2	Rectangular	√3	1	1	4.2	4.2	∞
Liquid Conductivity - Deviation from Target Values	5.0	Rectangular	√3	0.64	0.43	1.8	1.2	∞
Liquid Conductivity - Measurement Uncertainty	1.0	Normal	1	0.64	0.43	0.6	0.4	25
Liquid Permittivity - Deviation from Target Values	5.0	Rectangular	√3	0.60	0.49	1.7	1.4	∞
Liquid Permittivity - Measurement Uncertainty	0.5	Normal	1	0.60	0.49	0.3	0.2	25
Combined Standard Uncertainty						± 11.2 %	± 10.4 %	
Expanded Uncertainty (K=2)						**± 22.4 %**	**± 20.8 %**	

Uncertainty budget for frequency range 300 MHz to 3 GHz

Source of Uncertainty	Tolerance (± %)	Probability Distribution	Divisor	Ci (1g)	Ci (10g)	Standard Uncertainty (± %, 1g)	Standard Uncertainty (± %, 10g)	Vi
Measurement System								
Probe Calibration	6.55	Normal	1	1	1	6.55	6.55	∞
Axial Isotropy	4.7	Rectangular	√3	0.707	0.707	1.9	1.9	∞
Hemispherical Isotropy	9.6	Rectangular	√3	0.707	0.707	3.9	3.9	∞
Boundary Effect	2.0	Rectangular	√3	1	1	1.2	1.2	∞
Linearity	4.7	Rectangular	√3	1	1	2.7	2.7	∞
System Detection Limits	0.25	Rectangular	√3	1	1	0.14	0.14	∞
Readout Electronics	0.3	Normal	1	1	1	0.3	0.3	∞
Response Time	0.0	Rectangular	√3	1	1	0.0	0.0	∞
Integration Time	1.7	Rectangular	√3	1	1	1.0	1.0	∞
RF Ambient Conditions - Noise	3.0	Rectangular	√3	1	1	1.7	1.7	∞
RF Ambient Conditions - Reflections	3.0	Rectangular	√3	1	1	1.7	1.7	∞
Probe Positioner Mechanical Tolerance	0.4	Rectangular	√3	1	1	0.2	0.2	∞
Probe Positioning with Respect to Phantom Shell	6.7	Rectangular	√3	1	1	3.9	3.9	∞
Extrapolation, interpolation, and integration algorithms for max. SAR evaluation	4.0	Rectangular	√3	1	1	2.3	2.3	∞
Test Sample Related								
Test Sample Positioning	1.5 / 0.7	Normal	1	1	1	1.5	0.7	32
Device Holder Uncertainty	4.2 / 1.8	Normal	1	1	1	4.2	1.8	32
Output Power Variation - SAR Drift Measurement	5.0	Rectangular	√3	1	1	2.9	2.9	∞
Phantom and Tissue Parameters								
Phantom Uncertainty (Shape and Thickness Tolerances)	7.6	Rectangular	√3	1	1	4.4	4.4	∞
Liquid Conductivity - Deviation from Target Values	5.0	Rectangular	√3	0.64	0.43	1.8	1.2	∞
Liquid Conductivity - Measurement Uncertainty	1.0	Normal	1	0.64	0.43	0.6	0.4	25
Liquid Permittivity - Deviation from Target Values	5.0	Rectangular	√3	0.60	0.49	1.7	1.4	∞
Liquid Permittivity - Measurement Uncertainty	0.5	Normal	1	0.60	0.49	0.3	0.2	25
Combined Standard Uncertainty						± 12.3 %	± 11.5 %	
Expanded Uncertainty (K=2)						**± 24.6 %**	**± 23.0 %**	

Uncertainty budget for frequency range 3 GHz to 6 GHz

7. Information on the Testing Laboratories

We, Bureau Veritas Shenzhen Co., Ltd. Dongguan Branch, were founded in 2002 to provide our best service in EMC, Radio, Telecom and Safety consultation. Our laboratories are accredited and approved according to ISO/IEC 17025.

If you have any comments, please feel free to contact us at the following:

China Dongguan Lab:
No. 34, Guantai Rd., Houjie Town, Dongguan, Guangdong 523942, China
Tel: 86-769-8593-5656
Fax: 86-769-8599-1080

Email: service.dg@cn.bureauveritas.com
Web Site: www.adt.com.tw

The road map of all our labs can be found in our web site also.

---END---

Appendix A. SAR Plots of System Verification

The plots for system verification with largest deviation for each SAR system combination are shown as follows.

Test Laboratory: Bureau Veritas ADT SAR/HAC Testing Lab Date: 2015/12/03

System Check_H835_151203

DUT: Dipole:835 MHz; Type:D835V2; SN;4d139

Communication System: CW; Frequency: 835 MHz;Duty Cycle: 1:1
Medium: H835_1203 Medium parameters used: f = 835 MHz; σ = 0.89 S/m; ε_r = 41.41; ρ = 1000 kg/m^3
Ambient Temperature：22.1 ℃； Liquid Temperature：21.2 ℃

DASY5 Configuration:
- Probe: EX3DV4 - SN3873; ConvF(9.53, 9.53, 9.53); Calibrated: 2015/08/26;
- Sensor-Surface: 1.4mm (Mechanical Surface Detection)
- Electronics: DAE4 Sn1341; Calibrated: 2015/08/25
- Phantom: Left Phantom with CRP v5.0; Type: QD000P40CD; Serial: TP:1722
- Measurement SW: DASY52, Version 52.8 (8); SEMCAD X Version 14.6.10 (7331)

Pin=250mW/Area Scan (61x101x1): Interpolated grid: dx=1.500 mm, dy=1.500 mm
Maximum value of SAR (interpolated) = 2.93 W/kg

Pin=250mW/Zoom Scan (5x5x7)/Cube 0: Measurement grid: dx=8mm, dy=8mm, dz=5mm
Reference Value = 56.54 V/m; Power Drift = 0.12 dB
Peak SAR (extrapolated) = 3.46 W/kg
SAR(1 g) = 2.34 W/kg; SAR(10 g) = 1.53 W/kg
Maximum value of SAR (measured) = 2.96 W/kg

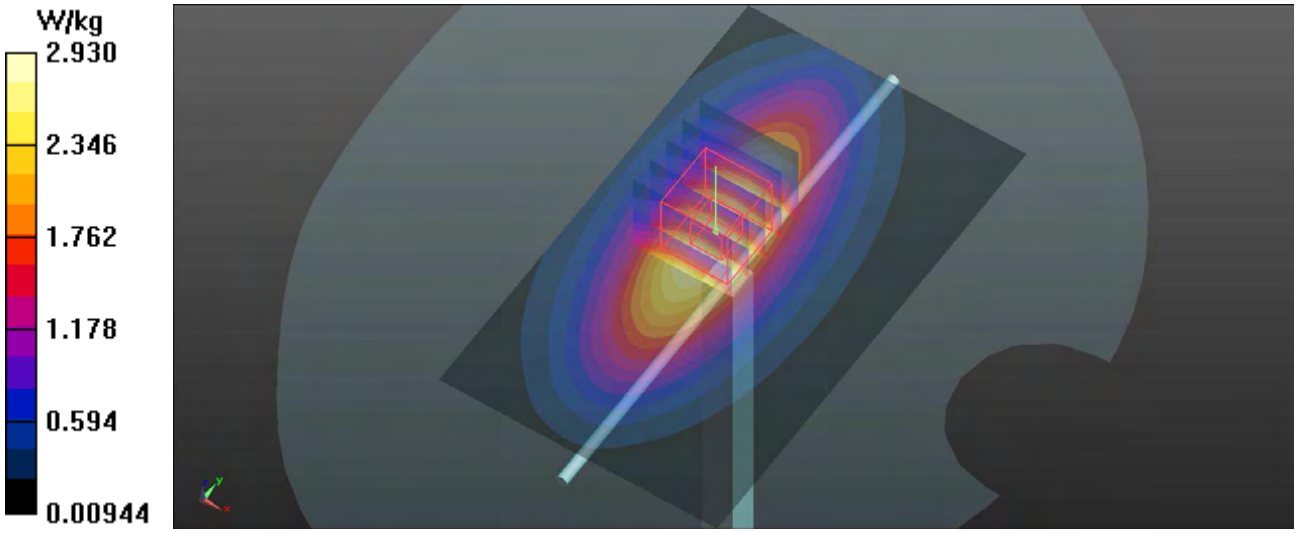

Test Laboratory: Bureau Veritas ADT SAR/HAC Testing Lab Date: 2015/12/03

System Check_H1900_151203

DUT: Dipole 1900 MHz;Type: D1900V2; SN: 5d159

Communication System: CW; Frequency: 1900 MHz;Duty Cycle: 1:1
Medium: H1900_1203 Medium parameters used: f = 1900 MHz; σ = 1.441 S/m; ε_r = 39.728; ρ = 1000 kg/m^3
Ambient Temperature：22.1 ℃； Liquid Temperature：21.2 ℃

DASY5 Configuration:
- Probe: EX3DV4 - SN3873; ConvF(7.98, 7.98, 7.98); Calibrated: 2015/08/26;
- Sensor-Surface: 1.4mm (Mechanical Surface Detection)
- Electronics: DAE4 Sn1341; Calibrated: 2015/08/25
- Phantom: Front Phantom with CRP v5.0; Type: QD000P40CD; Serial: TP:1695
- Measurement SW: DASY52, Version 52.8 (8); SEMCAD X Version 14.6.10 (7331)

Pin=250mW/Area Scan (61x61x1): Interpolated grid: dx=1.500 mm, dy=1.500 mm
Maximum value of SAR (interpolated) = 13.9 W/kg

Pin=250mW/Zoom Scan (5x5x7)/Cube 0: Measurement grid: dx=8mm, dy=8mm, dz=5mm
Reference Value = 90.88 V/m; Power Drift = 0.04 dB
Peak SAR (extrapolated) = 18.2 W/kg
SAR(1 g) = 9.93 W/kg; SAR(10 g) = 5.15 W/kg
Maximum value of SAR (measured) = 14.2 W/kg

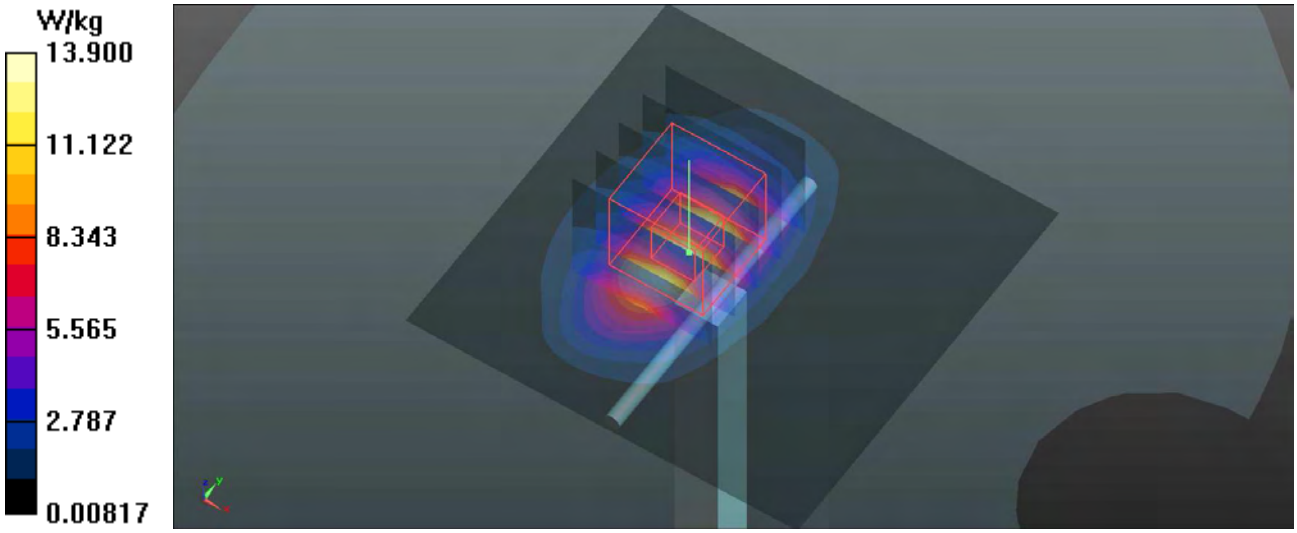

Test Laboratory: Bureau Veritas ADT SAR/HAC Testing Lab Date: 2015/12/07

System Check_H2450_151207

DUT: Dipole 2450 MHz; Type:D2450V2; SN:893

Communication System: CW; Frequency: 2450 MHz;Duty Cycle: 1:1
Medium: H2450_1207 Medium parameters used: f = 2450 MHz; σ = 1.832 S/m; ε_r = 38.661; ρ = 1000 kg/m^3
Ambient Temperature：21.7 ℃； Liquid Temperature：20.8 ℃

DASY5 Configuration:
- Probe: EX3DV4 - SN3873; ConvF(7.24, 7.24, 7.24); Calibrated: 2015/08/26;
- Sensor-Surface: 1.4mm (Mechanical Surface Detection)
- Electronics: DAE4 Sn1341; Calibrated: 2015/08/25
- Phantom: Front Phantom with CRP v5.0; Type: QD000P40CD; Serial: TP:1695
- Measurement SW: DASY52, Version 52.8 (8); SEMCAD X Version 14.6.10 (7331)

Pin=250mW/Area Scan (81x81x1): Interpolated grid: dx=1.200 mm, dy=1.200 mm
Maximum value of SAR (interpolated) = 20.1 W/kg

Pin=250mW/Zoom Scan (7x7x7)/Cube 0: Measurement grid: dx=5mm, dy=5mm, dz=5mm
Reference Value = 98.57 V/m; Power Drift = 0.14 dB
Peak SAR (extrapolated) = 28.6 W/kg
SAR(1 g) = 12.8 W/kg; SAR(10 g) = 5.76 W/kg
Maximum value of SAR (measured) = 20.3 W/kg

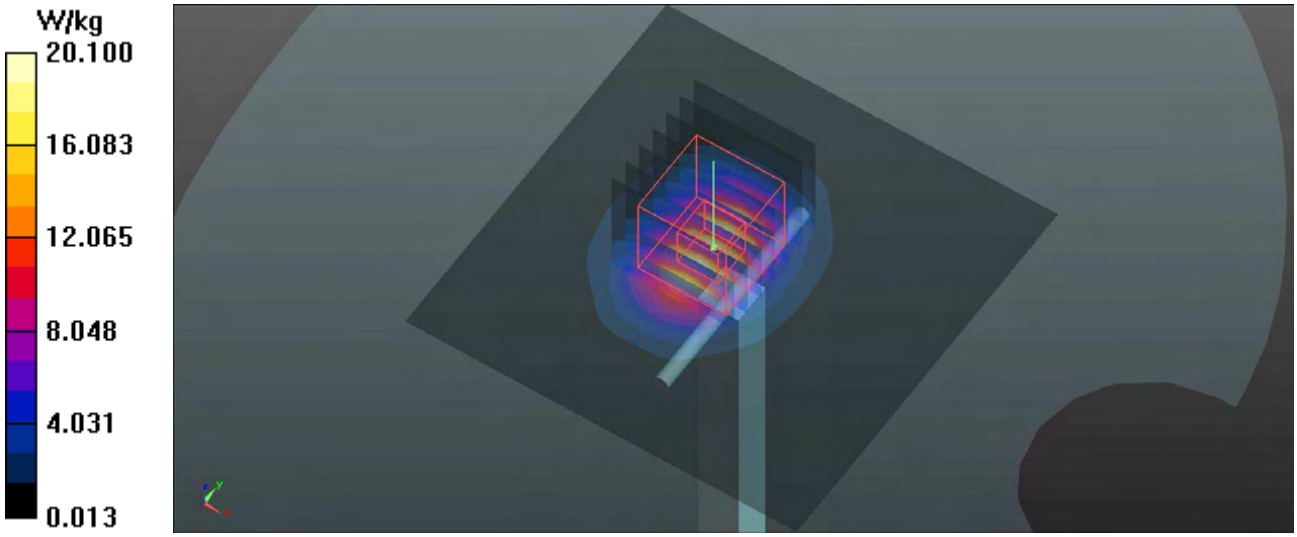

Test Laboratory: Bureau Veritas ADT SAR/HAC Testing Lab Date: 2015/12/07

System Check_H5250_151207

DUT: Dipole D5GHzV2; Type:D5GHzV2; SN:1133

Communication System: CW; Frequency: 5250 MHz;Duty Cycle: 1:1
Medium: H5G_1207 Medium parameters used: f = 5250 MHz; σ = 4.721 S/m; ε_r = 36.359; ρ = 1000 kg/m^3
Ambient Temperature：21.7 ℃； Liquid Temperature：20.8 ℃

DASY5 Configuration:
- Probe: EX3DV4 - SN3873; ConvF(4.95, 4.95, 4.95); Calibrated: 2015/08/26;
- Sensor-Surface: 1.4mm (Mechanical Surface Detection)
- Electronics: DAE4 Sn1341; Calibrated: 2015/08/25
- Phantom: Left Phantom with CRP v5.0; Type: QD000P40CD; Serial: TP:1722
- Measurement SW: DASY52, Version 52.8 (8); SEMCAD X Version 14.6.10 (7331)

Pin=100mW/Area Scan (91x91x1): Interpolated grid: dx=1.000 mm, dy=1.000 mm
Maximum value of SAR (interpolated) = 15.3 W/kg

Pin=100mW/Zoom Scan (7x7x12)/Cube 0: Measurement grid: dx=4mm, dy=4mm, dz=2mm
Reference Value = 62.35 V/m; Power Drift = 0.04 dB
Peak SAR (extrapolated) = 32.3 W/kg
SAR(1 g) = 7.93 W/kg; SAR(10 g) = 2.26 W/kg
Maximum value of SAR (measured) = 16.6 W/kg

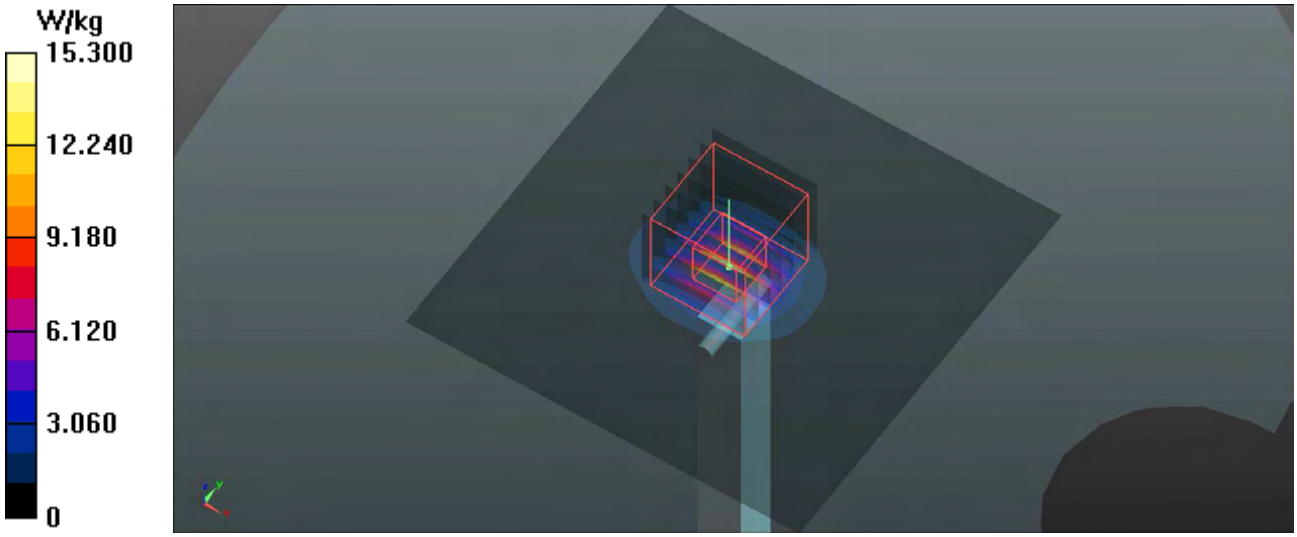

Test Laboratory: Bureau Veritas ADT SAR/HAC Testing Lab Date: 2015/12/07

System Check_H5800_151207

DUT: Dipole D5GHzV2; Type:D5GHzV2; SN:1133

Communication System: CW; Frequency: 5800 MHz;Duty Cycle: 1:1
Medium: H5G_1207 Medium parameters used: f = 5800 MHz; σ = 5.273 S/m; ε_r = 35.577; ρ = 1000 kg/m^3
Ambient Temperature：21.7 ℃； Liquid Temperature：20.8 ℃

DASY5 Configuration:
- Probe: EX3DV4 - SN3873; ConvF(4.64, 4.64, 4.64); Calibrated: 2015/08/26;
- Sensor-Surface: 1.4mm (Mechanical Surface Detection)
- Electronics: DAE4 Sn1341; Calibrated: 2015/08/25
- Phantom: Left Phantom with CRP v5.0; Type: QD000P40CD; Serial: TP:1722
- Measurement SW: DASY52, Version 52.8 (8); SEMCAD X Version 14.6.10 (7331)

Pin=100mW/Area Scan (91x91x1): Interpolated grid: dx=1.000 mm, dy=1.000 mm
Maximum value of SAR (interpolated) = 19.3 W/kg

Pin=100mW/Zoom Scan (7x7x11)/Cube 0: Measurement grid: dx=4mm, dy=4mm, dz=2mm
Reference Value = 52.49 V/m; Power Drift = 0.12 dB
Peak SAR (extrapolated) = 35.2 W/kg
SAR(1 g) = 7.63 W/kg; SAR(10 g) = 2.15 W/kg
Maximum value of SAR (measured) = 19.8 W/kg

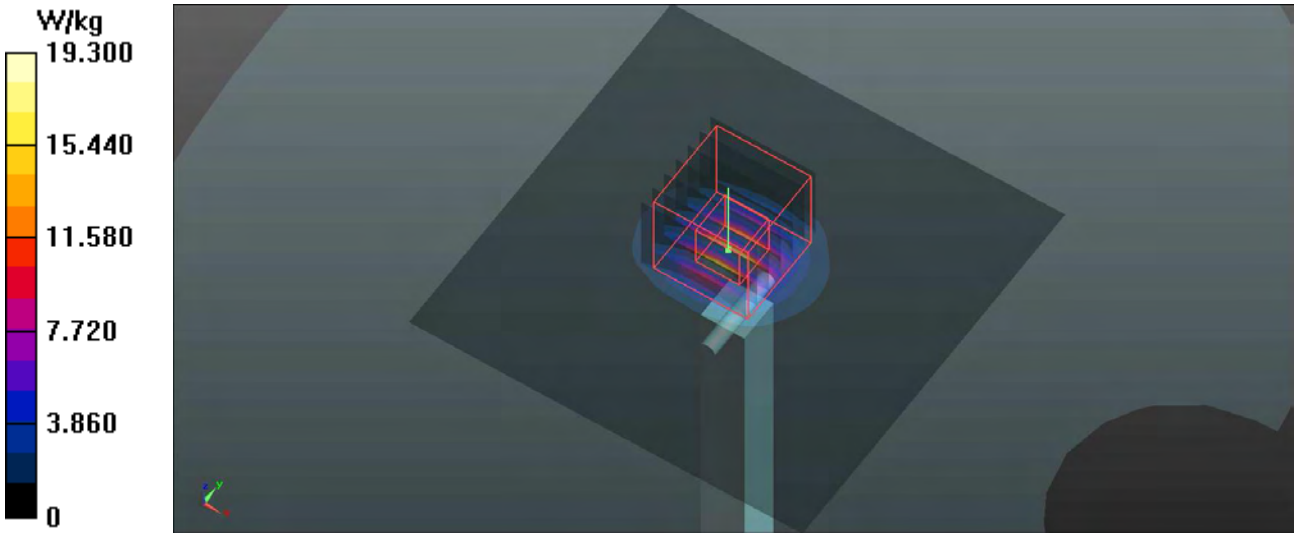

Test Laboratory: Bureau Veritas ADT SAR/HAC Testing Lab Date: 2015/12/04

System Check_B835_151204

DUT: Dipole:835 MHz; Type:D835V2; SN:4d139

Communication System: CW; Frequency: 835 MHz;Duty Cycle: 1:1
Medium: B835_1204 Medium parameters used: f = 835 MHz; σ = 0.978 S/m; ε_r = 55.648; ρ = 1000 kg/m^3
Ambient Temperature：21.8 ℃； Liquid Temperature：20.9 ℃

DASY5 Configuration:
- Probe: EX3DV4 - SN3873; ConvF(9.72, 9.72, 9.72); Calibrated: 2015/08/26;
- Sensor-Surface: 1.4mm (Mechanical Surface Detection)
- Electronics: DAE4 Sn1341; Calibrated: 2015/08/25
- Phantom: Left Phantom with CRP v5.0; Type: QD000P40CD; Serial: TP:1722
- Measurement SW: DASY52, Version 52.8 (8); SEMCAD X Version 14.6.10 (7331)

Pin=250mW/Area Scan (61x101x1): Interpolated grid: dx=1.500 mm, dy=1.500 mm
Maximum value of SAR (interpolated) = 2.85 W/kg

Pin=250mW/Zoom Scan (5x5x7)/Cube 0: Measurement grid: dx=8mm, dy=8mm, dz=5mm
Reference Value = 55.92 V/m; Power Drift = -0.05 dB
Peak SAR (extrapolated) = 3.31 W/kg
SAR(1 g) = 2.28 W/kg; SAR(10 g) = 1.52 W/kg
Maximum value of SAR (measured) = 2.85 W/kg

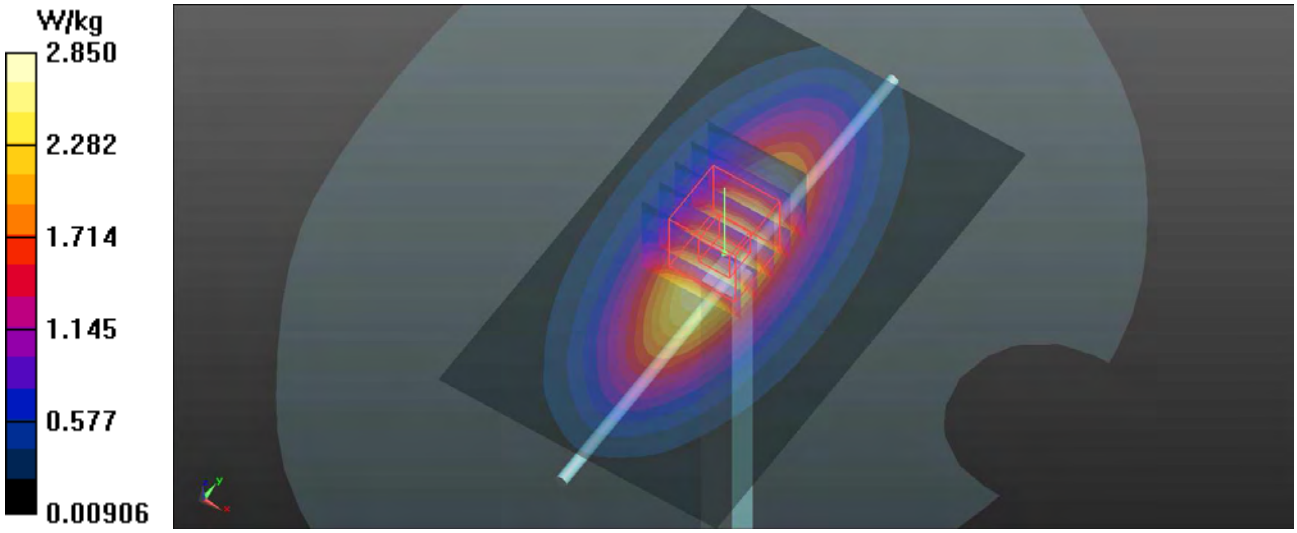

Test Laboratory: Bureau Veritas ADT SAR/HAC Testing Lab Date: 2015/12/04

System Check_B1900_151204

DUT: Dipole:1900MHz; Type:D1900V2; SN:5d159

Communication System: CW; Frequency: 1900 MHz;Duty Cycle: 1:1
Medium: B1900_1204 Medium parameters used: f = 1900 MHz; σ = 1.561 S/m; ε_r = 54.788; ρ = 1000 kg/m^3
Ambient Temperature：21.8 ℃; Liquid Temperature：20.9 ℃

DASY5 Configuration:
- Probe: EX3DV4 - SN3873; ConvF(7.62, 7.62, 7.62); Calibrated: 2015/08/26;
- Sensor-Surface: 1.4mm (Mechanical Surface Detection)
- Electronics: DAE4 Sn1341; Calibrated: 2015/08/25
- Phantom: Front Phantom with CRP v5.0; Type: QD000P40CD; Serial: TP:1695
- Measurement SW: DASY52, Version 52.8 (8); SEMCAD X Version 14.6.10 (7331)

Pin=250mW/Area Scan (61x61x1): Interpolated grid: dx=1.500 mm, dy=1.500 mm
Maximum value of SAR (interpolated) = 12.8 W/kg

Pin=250mW/Zoom Scan (5x5x7)/Cube 0: Measurement grid: dx=8mm, dy=8mm, dz=5mm
Reference Value = 85.59 V/m; Power Drift = 0.14 dB
Peak SAR (extrapolated) = 16.5 W/kg
SAR(1 g) = 9.37 W/kg; SAR(10 g) = 4.91 W/kg
Maximum value of SAR (measured) = 13.2 W/kg

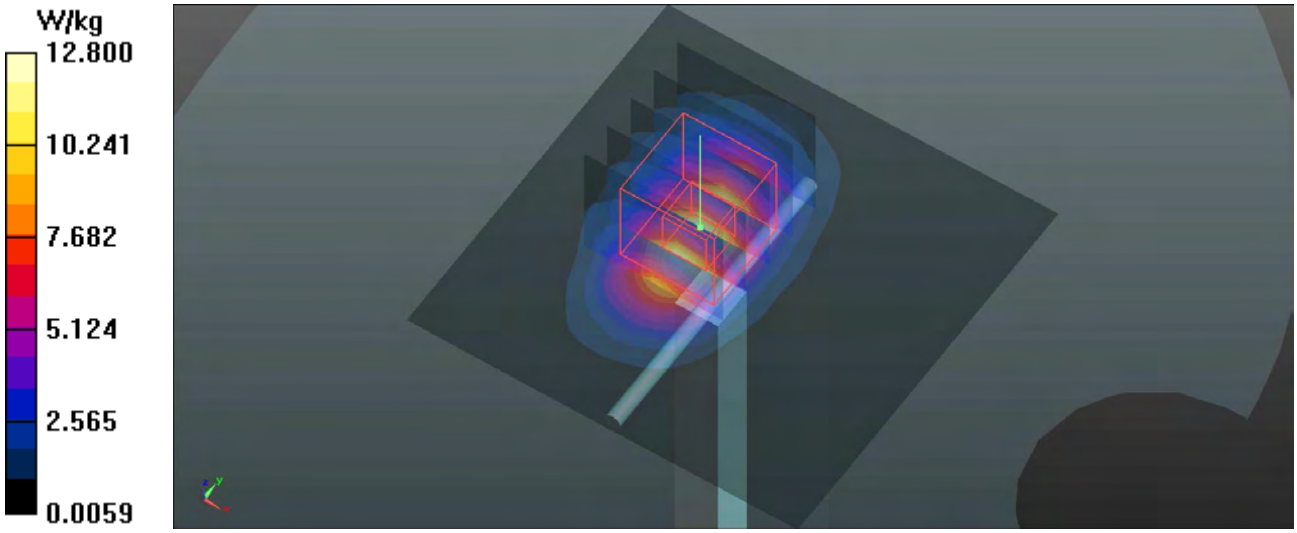

Test Laboratory: Bureau Veritas ADT SAR/HAC Testing Lab Date: 2015/12/08

System Check_B2450_151208

DUT: Dipole 2450 MHz; Type:D2450V2; SN:893

Communication System: CW; Frequency: 2450 MHz;Duty Cycle: 1:1
Medium: B2450_1208 Medium parameters used: f = 2450 MHz; σ = 1.906 S/m; ε_r = 51.411; ρ = 1000 kg/m^3
Ambient Temperature：22.1 ℃； Liquid Temperature：21.2 ℃

DASY5 Configuration:
- Probe: EX3DV4 - SN3873; ConvF(7.3, 7.3, 7.3); Calibrated: 2015/08/26;
- Sensor-Surface: 1.4mm (Mechanical Surface Detection)
- Electronics: DAE4 Sn1341; Calibrated: 2015/08/25
- Phantom: Front Phantom with CRP v5.0; Type: QD000P40CD; Serial: TP:1695
- Measurement SW: DASY52, Version 52.8 (8); SEMCAD X Version 14.6.10 (7331)

Pin=250mW/Area Scan (61x81x1): Interpolated grid: dx=1.200 mm, dy=1.200 mm
Maximum value of SAR (interpolated) = 20.0 W/kg

Pin=250mW/Zoom Scan (7x7x7)/Cube 0: Measurement grid: dx=5mm, dy=5mm, dz=5mm
Reference Value = 100.6 V/m; Power Drift = 0.06 dB
Peak SAR (extrapolated) = 26.7 W/kg
SAR(1 g) = 12.6 W/kg; SAR(10 g) = 5.75 W/kg
Maximum value of SAR (measured) = 19.3 W/kg

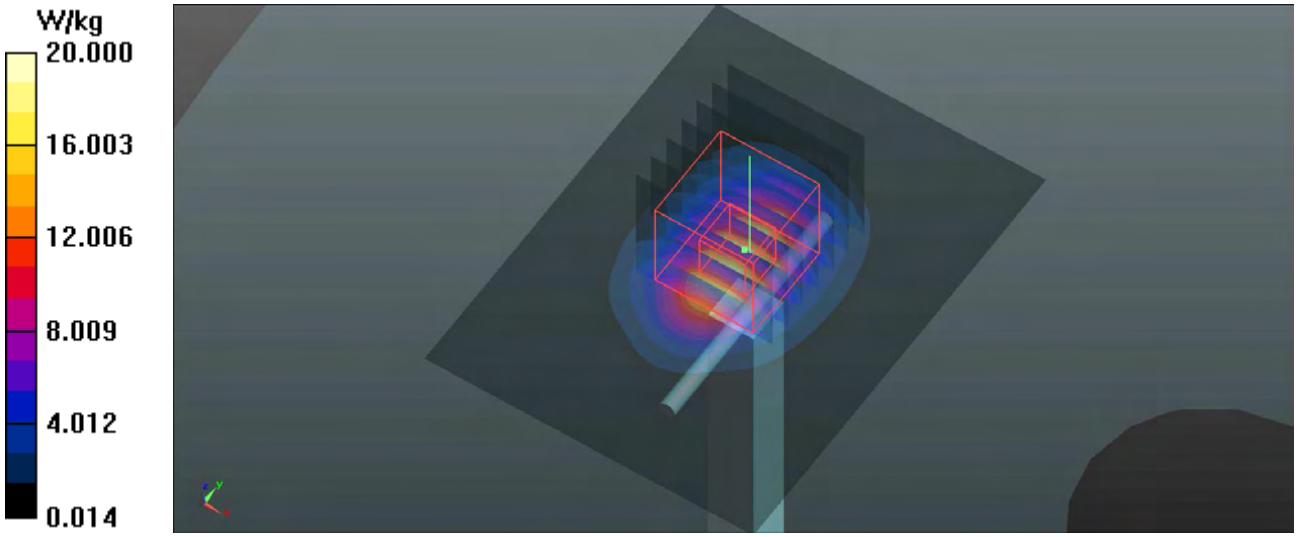

System Check_B5250_151208

DUT: Dipole D5GHzV2; Type:D5GHzV2; SN:1133

Communication System: CW; Frequency: 5250 MHz;Duty Cycle: 1:1
Medium: B5G_1208 Medium parameters used: f = 5250 MHz; σ = 5.379 S/m; ε_r = 48.856; ρ = 1000 kg/m^3
Ambient Temperature：22.1 ℃； Liquid Temperature：21.2 ℃

DASY5 Configuration:
- Probe: EX3DV4 - SN3873; ConvF(4.4, 4.4, 4.4); Calibrated: 2015/08/26;
- Sensor-Surface: 1.4mm (Mechanical Surface Detection)
- Electronics: DAE4 Sn1341; Calibrated: 2015/08/25
- Phantom: Left Phantom with CRP v5.0; Type: QD000P40CD; Serial: TP:1722
- Measurement SW: DASY52, Version 52.8 (8); SEMCAD X Version 14.6.10 (7331)

Pin=100mW/Area Scan (91x91x1): Interpolated grid: dx=1.000 mm, dy=1.000 mm
Maximum value of SAR (interpolated) = 18.9 W/kg

Pin=100mW/Zoom Scan (7x7x5)/Cube 0: Measurement grid: dx=4mm, dy=4mm, dz=2mm
Reference Value = 47.63 V/m; Power Drift = 0.05 dB
Peak SAR (extrapolated) = 34.2 W/kg
SAR(1 g) = 7.44 W/kg; SAR(10 g) = 2.08 W/kg
Maximum value of SAR (measured) = 19.9 W/kg

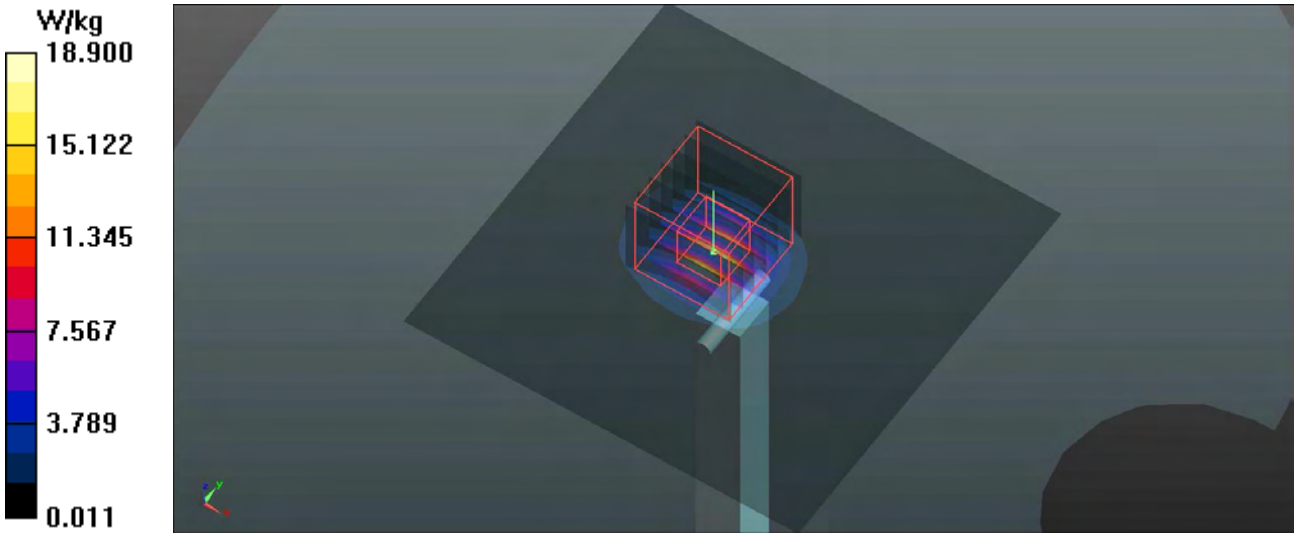

System Check_B5800_151208

DUT: Dipole D5GHzV2; Type:D5GHzV2; SN:1133

Communication System: CW; Frequency: 5800 MHz;Duty Cycle: 1:1
Medium: B5G_1208 Medium parameters used: f = 5800 MHz; σ = 6.123 S/m; ε_r = 47.668; ρ = 1000 kg/m^3
Ambient Temperature：22.1 ℃； Liquid Temperature：21.2 ℃

DASY5 Configuration:
- Probe: EX3DV4 - SN3873; ConvF(4.02, 4.02, 4.02); Calibrated: 2015/08/26;
- Sensor-Surface: 1.4mm (Mechanical Surface Detection)
- Electronics: DAE4 Sn1341; Calibrated: 2015/08/25
- Phantom: Left Phantom with CRP v5.0; Type: QD000P40CD; Serial: TP:1722
- Measurement SW: DASY52, Version 52.8 (8); SEMCAD X Version 14.6.10 (7331)

Pin=100mW/Area Scan (91x91x1): Interpolated grid: dx=1.000 mm, dy=1.000 mm
Maximum value of SAR (interpolated) = 18.7 W/kg

Pin=100mW/Zoom Scan (7x7x5)/Cube 0: Measurement grid: dx=4mm, dy=4mm, dz=2mm
Reference Value = 48.71 V/m; Power Drift = 0.03 dB
Peak SAR (extrapolated) = 35.4 W/kg
SAR(1 g) = 7.5 W/kg; SAR(10 g) = 2.08 W/kg
Maximum value of SAR (measured) = 20.4 W/kg

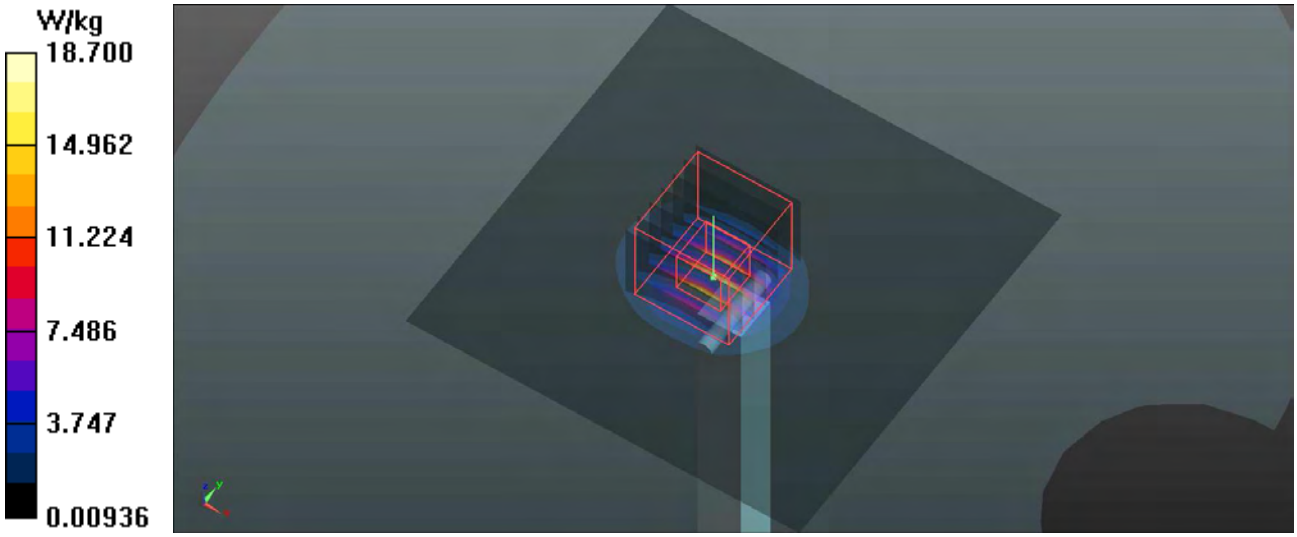

Appendix B. SAR Plots of SAR Measurement

The SAR plots for highest measured SAR in each exposure configuration, wireless mode and frequency band combination, and measured SAR > 1.5 W/kg are shown as follows.

P01 GSM850_GSM_Right Cheek_Ch189

DUT: 151125W002

Communication System: GSM; Frequency: 836.4 MHz;Duty Cycle: 1:8.3
Medium: H835_1203 Medium parameters used: f = 836.4 MHz; σ = 0.891 S/m; ε_r = 41.391; ρ = 1000 kg/m^3
Ambient Temperature：22.1 ℃； Liquid Temperature：21.2 ℃

DASY5 Configuration:
- Probe: EX3DV4 - SN3873; ConvF(9.53, 9.53, 9.53); Calibrated: 2015/08/26;
- Sensor-Surface: 1.4mm (Mechanical Surface Detection)
- Electronics: DAE4 Sn1341; Calibrated: 2015/08/25
- Phantom: Left Phantom with CRP v5.0; Type: QD000P40CD; Serial: TP:1722
- Measurement SW: DASY52, Version 52.8 (8); SEMCAD X Version 14.6.10 (7331)

- Area Scan (81x131x1): Interpolated grid: dx=1.500 mm, dy=1.500 mm
Maximum value of SAR (interpolated) = 0.182 W/kg

- Zoom Scan (5x5x7)/Cube 0: Measurement grid: dx=8mm, dy=8mm, dz=5mm
Reference Value = 5.234 V/m; Power Drift = 0.03 dB
Peak SAR (extrapolated) = 0.191 W/kg
SAR(1 g) = 0.154 W/kg; SAR(10 g) = 0.118 W/kg
Maximum value of SAR (measured) = 0.177 W/kg

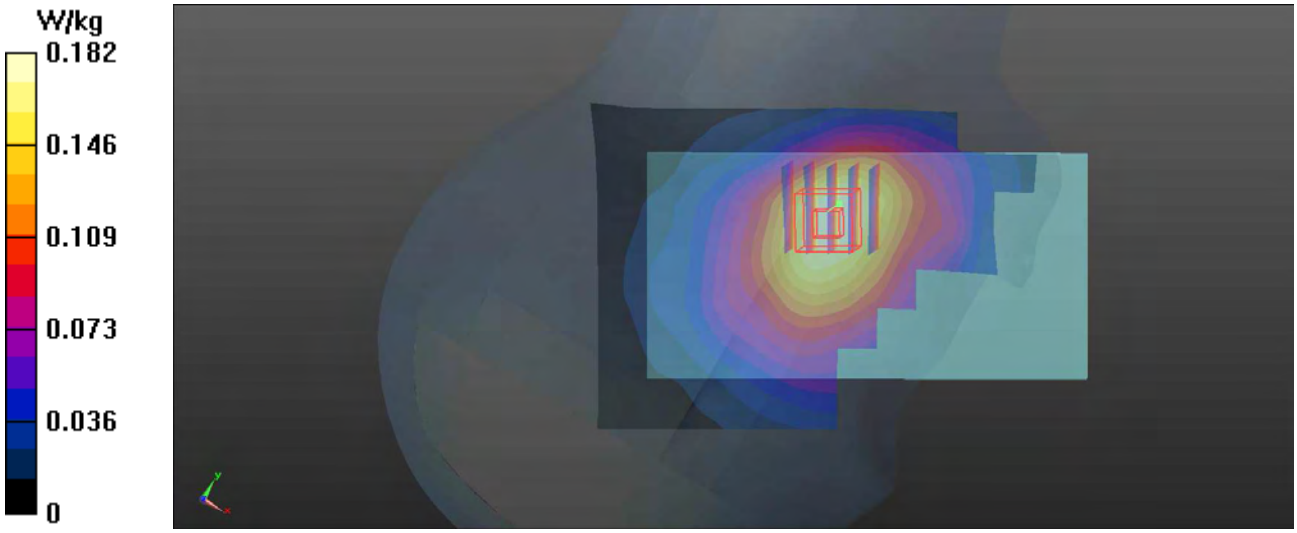

P02 GSM1900_GSM_Left Cheek_Ch512

DUT: 151125W002

Communication System: GSM; Frequency: 1850.2 MHz;Duty Cycle: 1:8.3
Medium: H1900_1203 Medium parameters used: f = 1850.2 MHz; σ = 1.39 S/m; ε_r = 39.96; ρ = 1000 kg/m^3
Ambient Temperature：22.1 ℃； Liquid Temperature：21.2 ℃

DASY5 Configuration:
- Probe: EX3DV4 - SN3873; ConvF(7.98, 7.98, 7.98); Calibrated: 2015/08/26;
- Sensor-Surface: 1.4mm (Mechanical Surface Detection)
- Electronics: DAE4 Sn1341; Calibrated: 2015/08/25
- Phantom: Front Phantom with CRP v5.0; Type: QD000P40CD; Serial: TP:1695
- Measurement SW: DASY52, Version 52.8 (8); SEMCAD X Version 14.6.10 (7331)

- Area Scan (81x131x1): Interpolated grid: dx=1.500 mm, dy=1.500 mm
Maximum value of SAR (interpolated) = 0.108 W/kg

- Zoom Scan (5x5x7)/Cube 0: Measurement grid: dx=8mm, dy=8mm, dz=5mm
Reference Value = 4.519 V/m; Power Drift = 0.03 dB
Peak SAR (extrapolated) = 0.123 W/kg
SAR(1 g) = 0.080 W/kg; SAR(10 g) = 0.051 W/kg
Maximum value of SAR (measured) = 0.107 W/kg

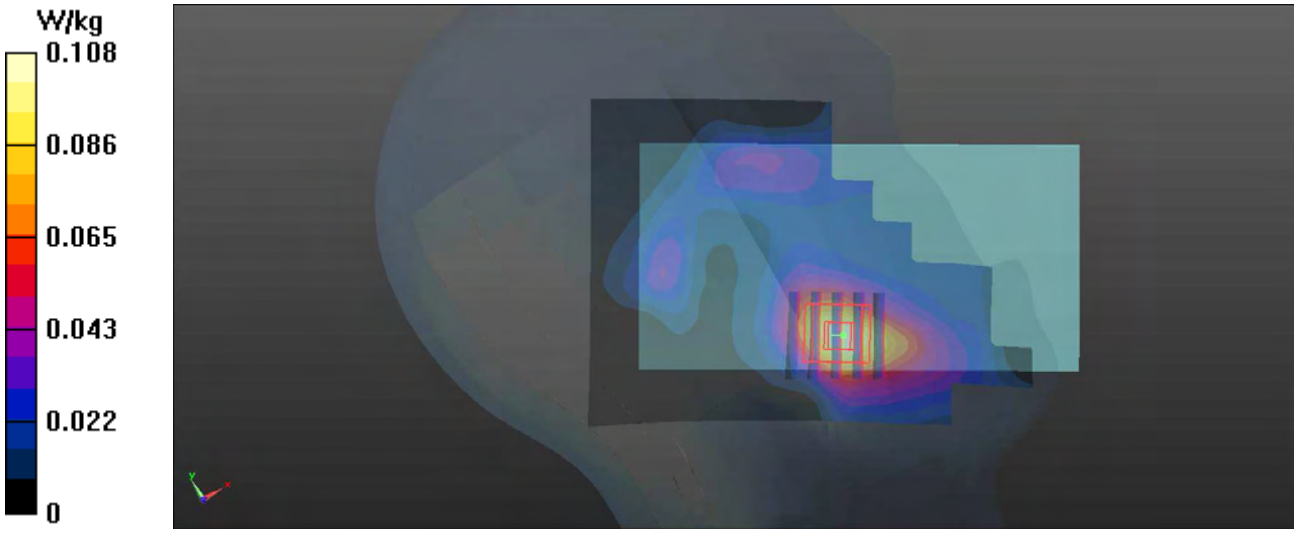

P03 WCDMA II_RMC12.2K_Left Cheek_Ch9400

DUT: 151125W002

Communication System: WCDMA; Frequency: 1880 MHz;Duty Cycle: 1:1
Medium: H1900_1203 Medium parameters used: f = 1880 MHz; σ = 1.421 S/m; ε_r = 39.823; ρ = 1000 kg/m^3
Ambient Temperature：22.1 ℃； Liquid Temperature：21.2 ℃

DASY5 Configuration:
- Probe: EX3DV4 - SN3873; ConvF(7.98, 7.98, 7.98); Calibrated: 2015/08/26;
- Sensor-Surface: 1.4mm (Mechanical Surface Detection)
- Electronics: DAE4 Sn1341; Calibrated: 2015/08/25
- Phantom: Front Phantom with CRP v5.0; Type: QD000P40CD; Serial: TP:1695
- Measurement SW: DASY52, Version 52.8 (8); SEMCAD X Version 14.6.10 (7331)

- Area Scan (81x131x1): Interpolated grid: dx=1.500 mm, dy=1.500 mm
Maximum value of SAR (interpolated) = 0.188 W/kg

- Zoom Scan (5x5x7)/Cube 0: Measurement grid: dx=8mm, dy=8mm, dz=5mm
Reference Value = 5.944 V/m; Power Drift = 0.01 dB
Peak SAR (extrapolated) = 0.204 W/kg
SAR(1 g) = 0.136 W/kg; SAR(10 g) = 0.086 W/kg
Maximum value of SAR (measured) = 0.176 W/kg

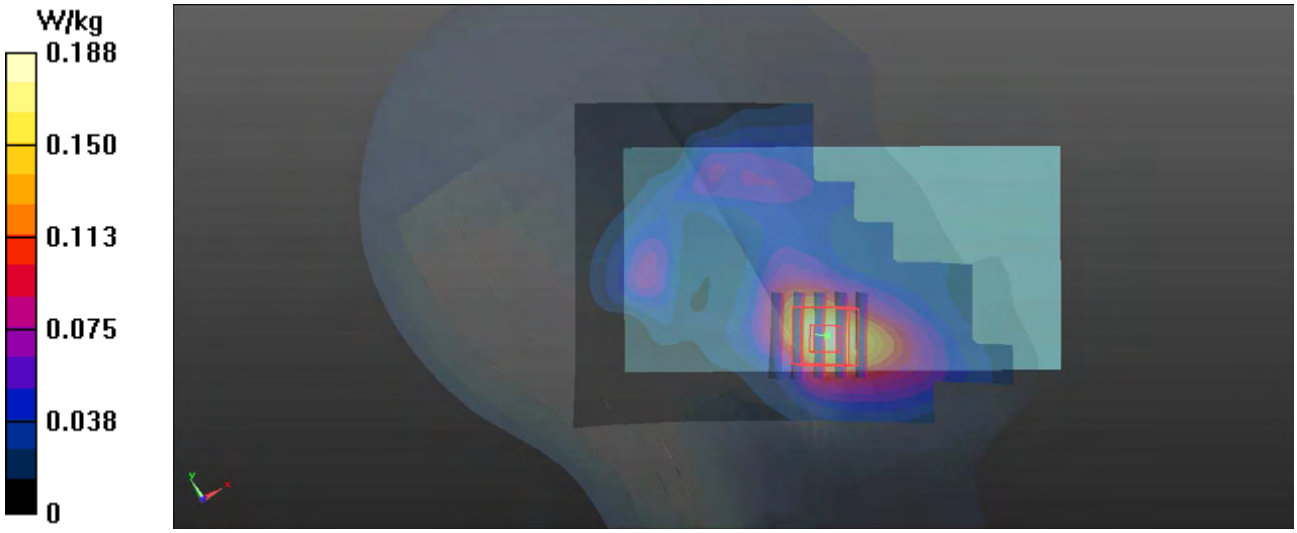

P04 WCDMA V_RMC12.2K_Right Cheek_Ch4182

DUT: 151125W002

Communication System: WCDMA; Frequency: 836.4 MHz;Duty Cycle: 1:1
Medium: H835_1203 Medium parameters used: f = 836.4 MHz; σ = 0.891 S/m; ε_r = 41.391; ρ = 1000 kg/m^3
Ambient Temperature：22.1 ℃； Liquid Temperature：21.2 ℃

DASY5 Configuration:
- Probe: EX3DV4 - SN3873; ConvF(9.53, 9.53, 9.53); Calibrated: 2015/08/26;
- Sensor-Surface: 1.4mm (Mechanical Surface Detection)
- Electronics: DAE4 Sn1341; Calibrated: 2015/08/25
- Phantom: Left Phantom with CRP v5.0; Type: QD000P40CD; Serial: TP:1722
- Measurement SW: DASY52, Version 52.8 (8); SEMCAD X Version 14.6.10 (7331)

- Area Scan (81x131x1): Interpolated grid: dx=1.500 mm, dy=1.500 mm
Maximum value of SAR (interpolated) = 0.170 W/kg

- Zoom Scan (5x5x7)/Cube 0: Measurement grid: dx=8mm, dy=8mm, dz=5mm
Reference Value = 4.849 V/m; Power Drift = 0.16 dB
Peak SAR (extrapolated) = 0.179 W/kg
SAR(1 g) = 0.143 W/kg; SAR(10 g) = 0.111 W/kg
Maximum value of SAR (measured) = 0.166 W/kg

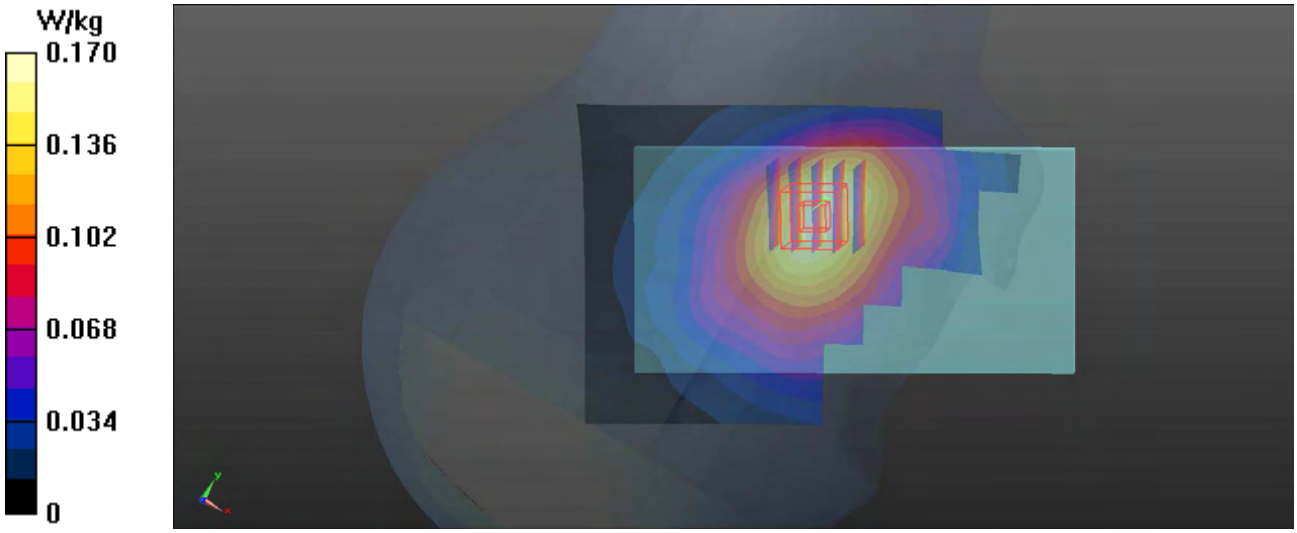

P05 802.11b_Right Cheek_Ch6

DUT: 151125W002

Communication System: 802.11b; Frequency: 2437 MHz;Duty Cycle: 1:1
Medium: H2450_1207 Medium parameters used: f = 2437 MHz; σ = 1.816 S/m; ε_r = 38.711; ρ = 1000 kg/m^3
Ambient Temperature：21.7 ℃; Liquid Temperature：20.8 ℃

DASY5 Configuration:
- Probe: EX3DV4 - SN3873; ConvF(7.24, 7.24, 7.24); Calibrated: 2015/08/26;
- Sensor-Surface: 1.4mm (Mechanical Surface Detection)
- Electronics: DAE4 Sn1341; Calibrated: 2015/08/25
- Phantom: Front Phantom with CRP v5.0; Type: QD000P40CD; Serial: TP:1695
- Measurement SW: DASY52, Version 52.8 (8); SEMCAD X Version 14.6.10 (7331)

- Area Scan (91x161x1): Interpolated grid: dx=1.200 mm, dy=1.200 mm
Maximum value of SAR (interpolated) = 0.479 W/kg

- Zoom Scan (5x5x7)/Cube 0: Measurement grid: dx=8mm, dy=8mm, dz=5mm
Reference Value = 4.905 V/m; Power Drift = 0.04 dB
Peak SAR (extrapolated) = 0.575 W/kg
SAR(1 g) = 0.225 W/kg; SAR(10 g) = 0.099 W/kg
Maximum value of SAR (measured) = 0.436 W/kg

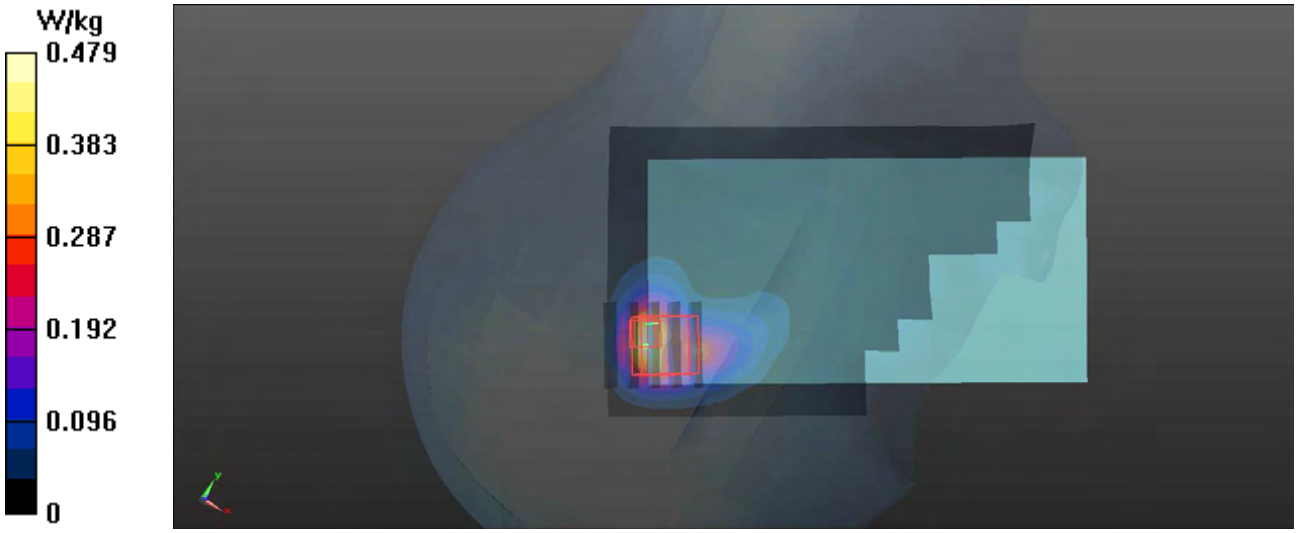

P06 802.11a_Right Cheek_Ch64

DUT: 151125W002

Communication System: 802.11a; Frequency: 5320 MHz;Duty Cycle: 1:1.03
Medium: H5G_1207 Medium parameters used: f = 5320 MHz; σ = 4.785 S/m; ε_r = 36.286; ρ = 1000 kg/m^3
Ambient Temperature：21.7 ℃； Liquid Temperature：20.8 ℃

DASY5 Configuration:
- Probe: EX3DV4 - SN3873; ConvF(4.95, 4.95, 4.95); Calibrated: 2015/08/26;
- Sensor-Surface: 1.4mm (Mechanical Surface Detection)
- Electronics: DAE4 Sn1341; Calibrated: 2015/08/25
- Phantom: Left Phantom with CRP v5.0; Type: QD000P40CD; Serial: TP:1722
- Measurement SW: DASY52, Version 52.8 (8); SEMCAD X Version 14.6.10 (7331)

- Area Scan (111x191x1): Interpolated grid: dx=1.000 mm, dy=1.000 mm
Maximum value of SAR (interpolated) = 0.341 W/kg

- Zoom Scan (7x7x12)/Cube 0: Measurement grid: dx=5mm, dy=5mm, dz=2mm
Reference Value = 3.104 V/m; Power Drift = 0.08 dB
Peak SAR (extrapolated) = 0.517 W/kg
SAR(1 g) = 0.118 W/kg; SAR(10 g) = 0.033 W/kg
Maximum value of SAR (measured) = 0.325 W/kg

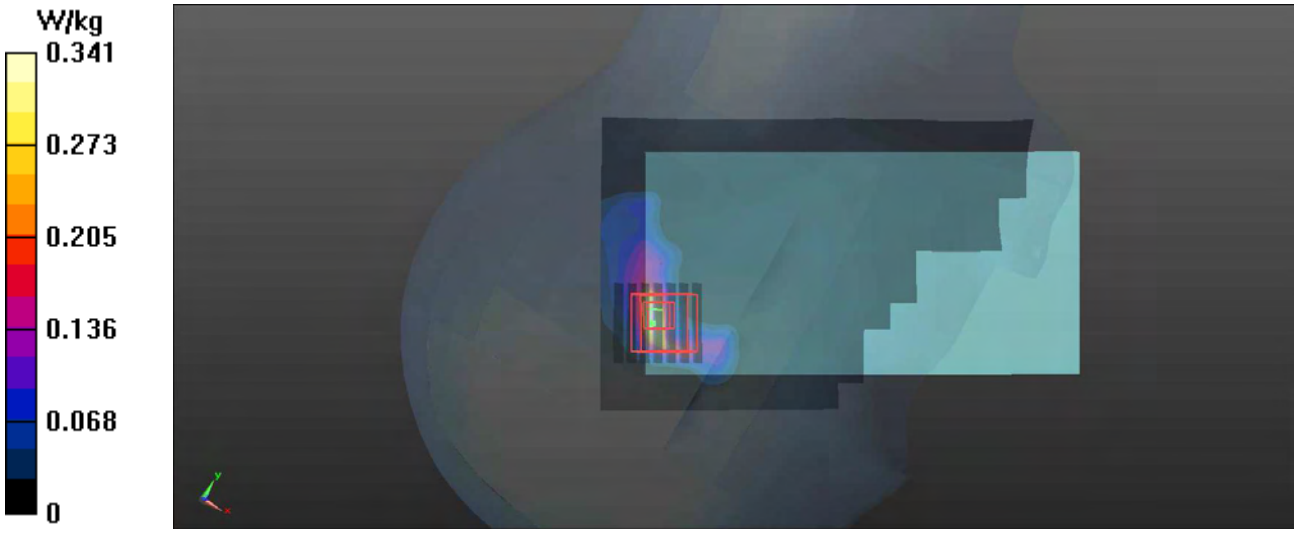

P07 802.11a_Right Cheek_Ch153

DUT: 151125W002

Communication System: 802.11a; Frequency: 5765 MHz;Duty Cycle: 1:1.03
Medium: H5G_1207 Medium parameters used: f = 5765 MHz; σ = 5.234 S/m; ε_r = 35.622; ρ = 1000 kg/m^3
Ambient Temperature：21.7 ℃; Liquid Temperature：20.8 ℃

DASY5 Configuration:
- Probe: EX3DV4 - SN3873; ConvF(4.64, 4.64, 4.64); Calibrated: 2015/08/26;
- Sensor-Surface: 1.4mm (Mechanical Surface Detection)
- Electronics: DAE4 Sn1341; Calibrated: 2015/08/25
- Phantom: Left Phantom with CRP v5.0; Type: QD000P40CD; Serial: TP:1722
- Measurement SW: DASY52, Version 52.8 (8); SEMCAD X Version 14.6.10 (7331)

- Area Scan (111x191x1): Interpolated grid: dx=1.000 mm, dy=1.000 mm
Maximum value of SAR (interpolated) = 0.647 W/kg

- Zoom Scan (7x7x12)/Cube 0: Measurement grid: dx=5mm, dy=5mm, dz=2mm
Reference Value = 2.202 V/m; Power Drift = 0.01 dB
Peak SAR (extrapolated) = 0.943 W/kg
SAR(1 g) = 0.193 W/kg; SAR(10 g) = 0.047 W/kg
Maximum value of SAR (measured) = 0.634 W/kg

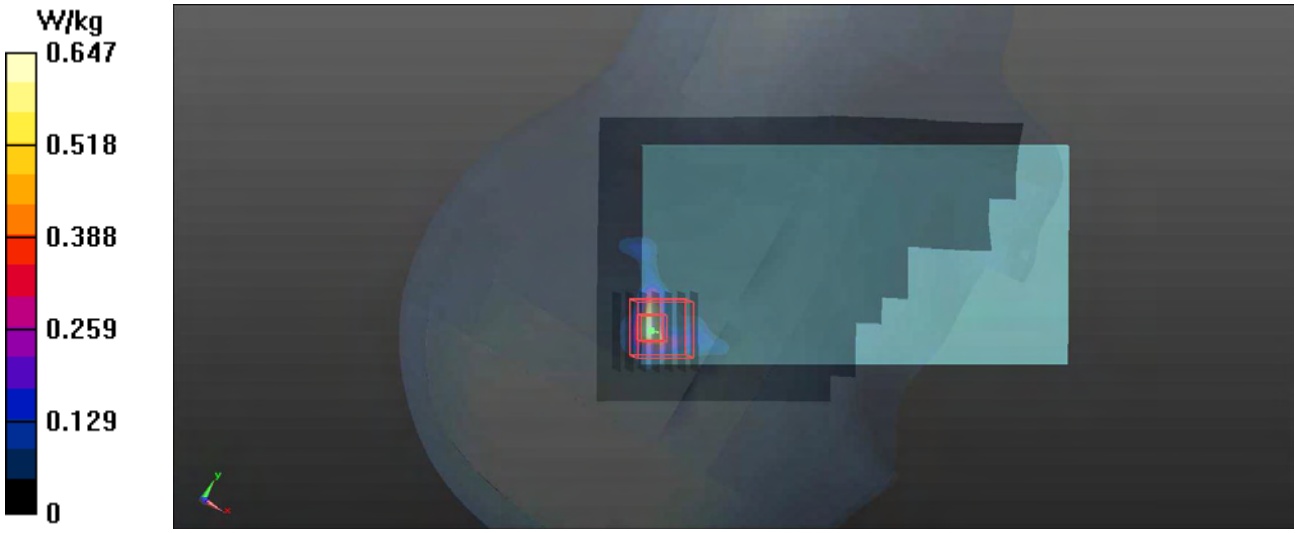

P08 GSM850_GSM_Rear Face_1cm_Ch189

DUT: 151125W002

Communication System: GSM; Frequency: 836.4 MHz;Duty Cycle: 1:8.3
Medium: B835_1204 Medium parameters used: f = 836.4 MHz; σ = 0.979 S/m; ε_r = 55.638; ρ = 1000 kg/m^3
Ambient Temperature：21.8 ℃； Liquid Temperature：20.9 ℃

DASY5 Configuration:
- Probe: EX3DV4 - SN3873; ConvF(9.72, 9.72, 9.72); Calibrated: 2015/08/26;
- Sensor-Surface: 1.4mm (Mechanical Surface Detection)
- Electronics: DAE4 Sn1341; Calibrated: 2015/08/25
- Phantom: Left Phantom with CRP v5.0; Type: QD000P40CD; Serial: TP:1722
- Measurement SW: DASY52, Version 52.8 (8); SEMCAD X Version 14.6.10 (7331)

- Area Scan (71x131x1): Interpolated grid: dx=1.500 mm, dy=1.500 mm
Maximum value of SAR (interpolated) = 0.459 W/kg

- Zoom Scan (5x5x7)/Cube 0: Measurement grid: dx=8mm, dy=8mm, dz=5mm
Reference Value = 17.94 V/m; Power Drift = 0.07 dB
Peak SAR (extrapolated) = 0.564 W/kg
SAR(1 g) = 0.314 W/kg; SAR(10 g) = 0.180 W/kg
Maximum value of SAR (measured) = 0.435 W/kg

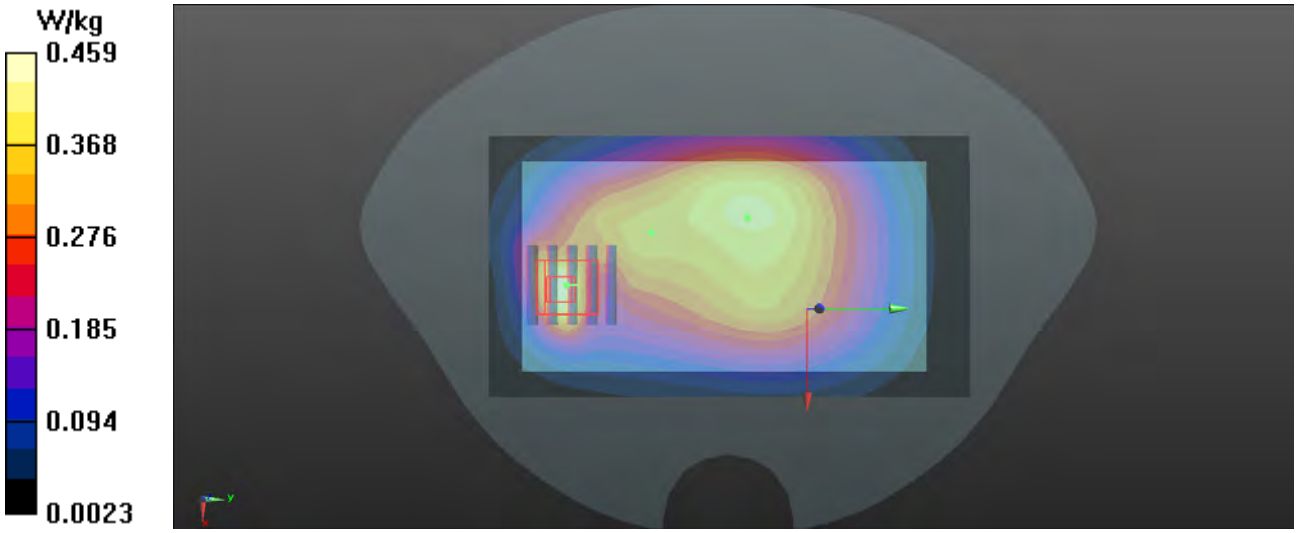

P09 GSM1900_GSM_Rear Face_1cm_Ch512

DUT: 151125W002

Communication System: GSM; Frequency: 1850.2 MHz;Duty Cycle: 1:8.3
Medium: B1900_1204 Medium parameters used: f = 1850.2 MHz; σ = 1.502 S/m; ε_r = 54.945; ρ = 1000 kg/m^3
Ambient Temperature：21.8 ℃； Liquid Temperature：20.9 ℃

DASY5 Configuration:
- Probe: EX3DV4 - SN3873; ConvF(7.62, 7.62, 7.62); Calibrated: 2015/08/26;
- Sensor-Surface: 1.4mm (Mechanical Surface Detection)
- Electronics: DAE4 Sn1341; Calibrated: 2015/08/25
- Phantom: Front Phantom with CRP v5.0; Type: QD000P40CD; Serial: TP:1695
- Measurement SW: DASY52, Version 52.8 (8); SEMCAD X Version 14.6.10 (7331)

- Area Scan (81x131x1): Interpolated grid: dx=1.500 mm, dy=1.500 mm
Maximum value of SAR (interpolated) = 0.338 W/kg

- Zoom Scan (5x5x7)/Cube 0: Measurement grid: dx=8mm, dy=8mm, dz=5mm
Reference Value = 6.804 V/m; Power Drift = 0.12 dB
Peak SAR (extrapolated) = 0.410 W/kg
SAR(1 g) = 0.251 W/kg; SAR(10 g) = 0.146 W/kg
Maximum value of SAR (measured) = 0.345 W/kg

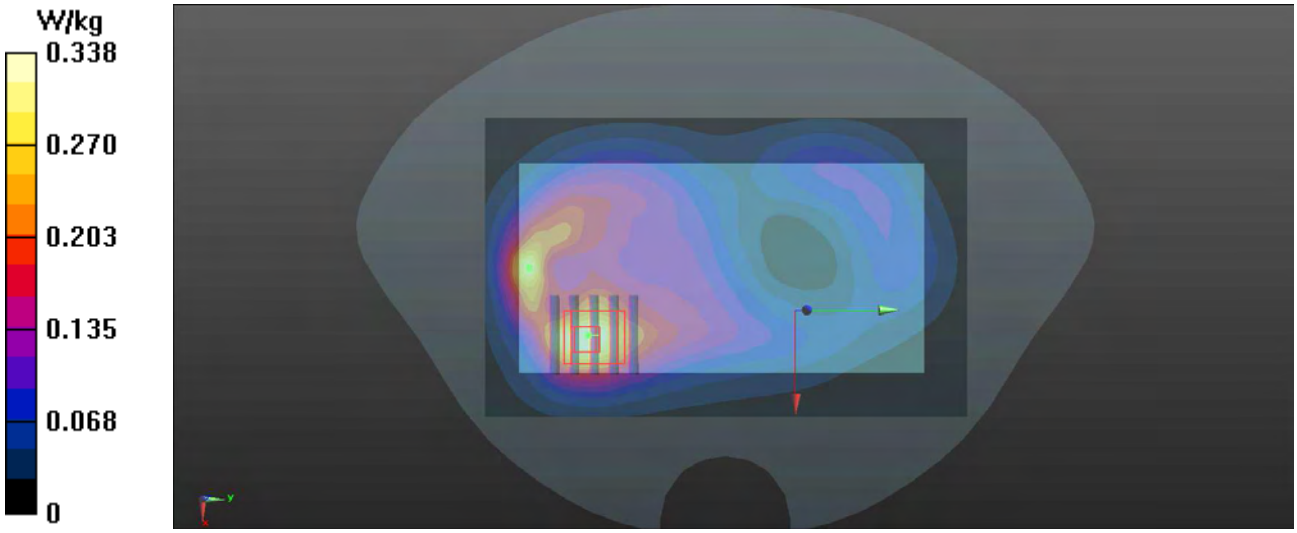

P10 WCDMA II_RMC12.2K_Rear Face_1cm_Ch9400

DUT: 151125W002

Communication System: WCDMA; Frequency: 1880 MHz;Duty Cycle: 1:1
Medium: B1900_1204 Medium parameters used: f = 1880 MHz; σ = 1.539 S/m; ε_r = 54.827; ρ = 1000 kg/m^3
Ambient Temperature：21.8 ℃； Liquid Temperature：20.9 ℃

DASY5 Configuration:
- Probe: EX3DV4 - SN3873; ConvF(7.62, 7.62, 7.62); Calibrated: 2015/08/26;
- Sensor-Surface: 1.4mm (Mechanical Surface Detection)
- Electronics: DAE4 Sn1341; Calibrated: 2015/08/25
- Phantom: Front Phantom with CRP v5.0; Type: QD000P40CD; Serial: TP:1695
- Measurement SW: DASY52, Version 52.8 (8); SEMCAD X Version 14.6.10 (7331)

- Area Scan (81x131x1): Interpolated grid: dx=1.500 mm, dy=1.500 mm
Maximum value of SAR (interpolated) = 0.621 W/kg

- Zoom Scan (5x5x7)/Cube 0: Measurement grid: dx=8mm, dy=8mm, dz=5mm
Reference Value = 10.14 V/m; Power Drift = -0.05 dB
Peak SAR (extrapolated) = 0.705 W/kg
SAR(1 g) = 0.435 W/kg; SAR(10 g) = 0.253 W/kg
Maximum value of SAR (measured) = 0.607 W/kg

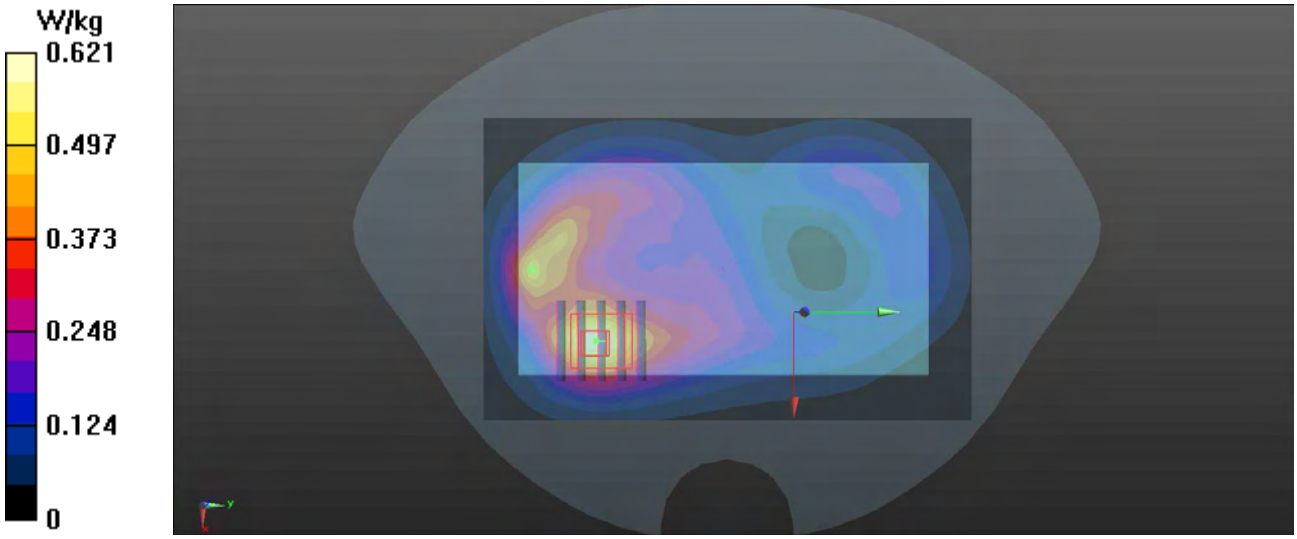

P11 802.11a_Rear Face_1cm_Ch64

DUT: 151125W002

Communication System: 802.11a; Frequency: 5320 MHz;Duty Cycle: 1:1.03
Medium: B5G_1208 Medium parameters used: f = 5320 MHz; σ = 5.438 S/m; ε_r = 48.649; ρ = 1000 kg/m^3
Ambient Temperature：22.1 ℃； Liquid Temperature：21.2 ℃

DASY5 Configuration:
- Probe: EX3DV4 - SN3873; ConvF(4.4, 4.4, 4.4); Calibrated: 2015/08/26;
- Sensor-Surface: 1.4mm (Mechanical Surface Detection)
- Electronics: DAE4 Sn1341; Calibrated: 2015/08/25
- Phantom: Left Phantom with CRP v5.0; Type: QD000P40CD; Serial: TP:1722
- Measurement SW: DASY52, Version 52.8 (8); SEMCAD X Version 14.6.10 (7331)

- Area Scan (101x191x1): Interpolated grid: dx=1.000 mm, dy=1.000 mm
Maximum value of SAR (interpolated) = 0.146 W/kg

- Zoom Scan (7x7x12)/Cube 0: Measurement grid: dx=5mm, dy=5mm, dz=2mm
Reference Value = 1.209 V/m; Power Drift = 0.06 dB
Peak SAR (extrapolated) = 0.162 W/kg
SAR(1 g) = 0.031 W/kg; SAR(10 g) = 0.011 W/kg
Maximum value of SAR (measured) = 0.0848 W/kg

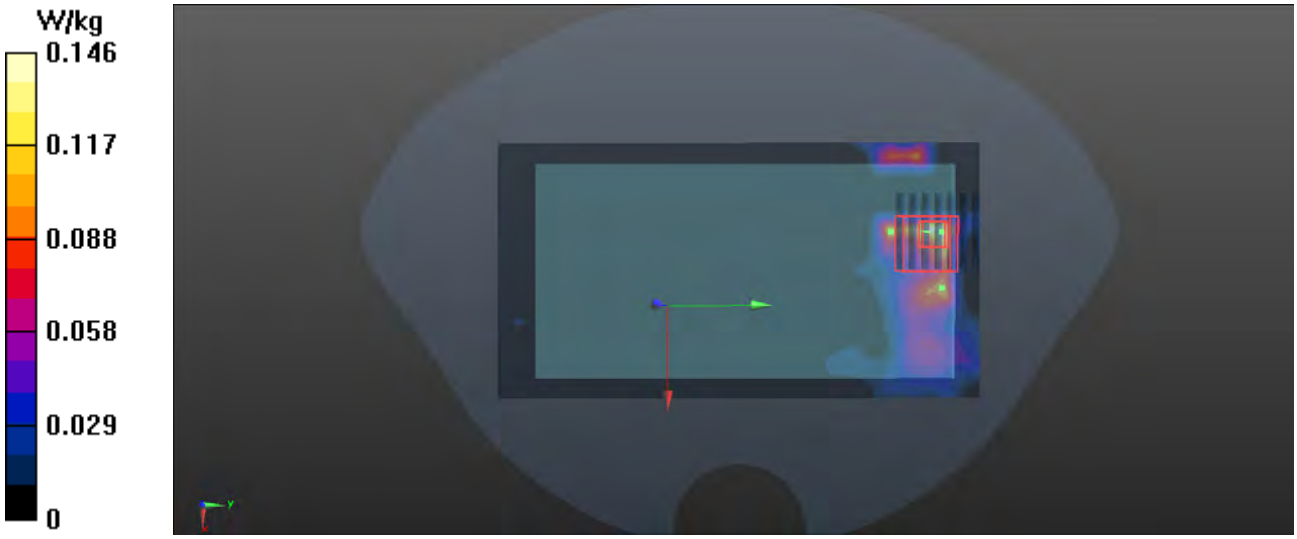

P12 GSM850_GPRS11_Rear Face_1cm_Ch189

DUT: 151125W002

Communication System: GPRS11; Frequency: 836.4 MHz;Duty Cycle: 1:2.67
Medium: B835_1204 Medium parameters used: f = 836.4 MHz; σ = 0.979 S/m; ε_r = 55.638; ρ = 1000 kg/m^3
Ambient Temperature：21.8 ℃； Liquid Temperature：20.9 ℃

DASY5 Configuration:
- Probe: EX3DV4 - SN3873; ConvF(9.72, 9.72, 9.72); Calibrated: 2015/08/26;
- Sensor-Surface: 1.4mm (Mechanical Surface Detection)
- Electronics: DAE4 Sn1341; Calibrated: 2015/08/25
- Phantom: Left Phantom with CRP v5.0; Type: QD000P40CD; Serial: TP:1722
- Measurement SW: DASY52, Version 52.8 (8); SEMCAD X Version 14.6.10 (7331)

- Area Scan (71x131x1): Interpolated grid: dx=1.500 mm, dy=1.500 mm
Maximum value of SAR (interpolated) = 1.09 W/kg

- Zoom Scan (5x5x7)/Cube 0: Measurement grid: dx=8mm, dy=8mm, dz=5mm
Reference Value = 27.18 V/m; Power Drift = 0.09 dB
Peak SAR (extrapolated) = 1.29 W/kg
SAR(1 g) = 0.725 W/kg; SAR(10 g) = 0.417 W/kg
Maximum value of SAR (measured) = 1.04 W/kg

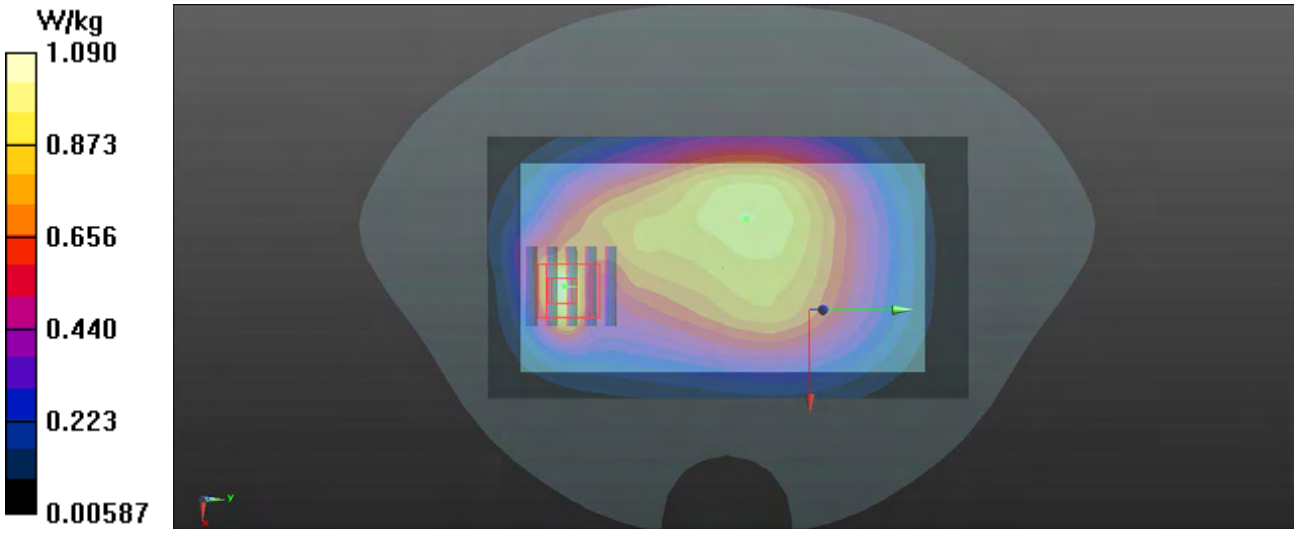

P13 GSM1900_GPRS11_Bottom Side_1cm_Ch512

DUT: 151125W002

Communication System: GPRS11; Frequency: 1850.2 MHz;Duty Cycle: 1:2.67
Medium: B1900_1204 Medium parameters used: f = 1850.2 MHz; σ = 1.502 S/m; ε_r = 54.945; ρ = 1000 kg/m^3
Ambient Temperature：21.8 ℃； Liquid Temperature：20.9 ℃

DASY5 Configuration:
- Probe: EX3DV4 - SN3873; ConvF(7.62, 7.62, 7.62); Calibrated: 2015/08/26;
- Sensor-Surface: 1.4mm (Mechanical Surface Detection)
- Electronics: DAE4 Sn1341; Calibrated: 2015/08/25
- Phantom: Front Phantom with CRP v5.0; Type: QD000P40CD; Serial: TP:1695
- Measurement SW: DASY52, Version 52.8 (8); SEMCAD X Version 14.6.10 (7331)

- Area Scan (61x81x1): Interpolated grid: dx=1.500 mm, dy=1.500 mm
Maximum value of SAR (interpolated) = 1.02 W/kg

- Zoom Scan (5x5x7)/Cube 0: Measurement grid: dx=8mm, dy=8mm, dz=5mm
Reference Value = 20.52 V/m; Power Drift = 0.02 dB
Peak SAR (extrapolated) = 1.26 W/kg
SAR(1 g) = 0.766 W/kg; SAR(10 g) = 0.423 W/kg
Maximum value of SAR (measured) = 1.09 W/kg

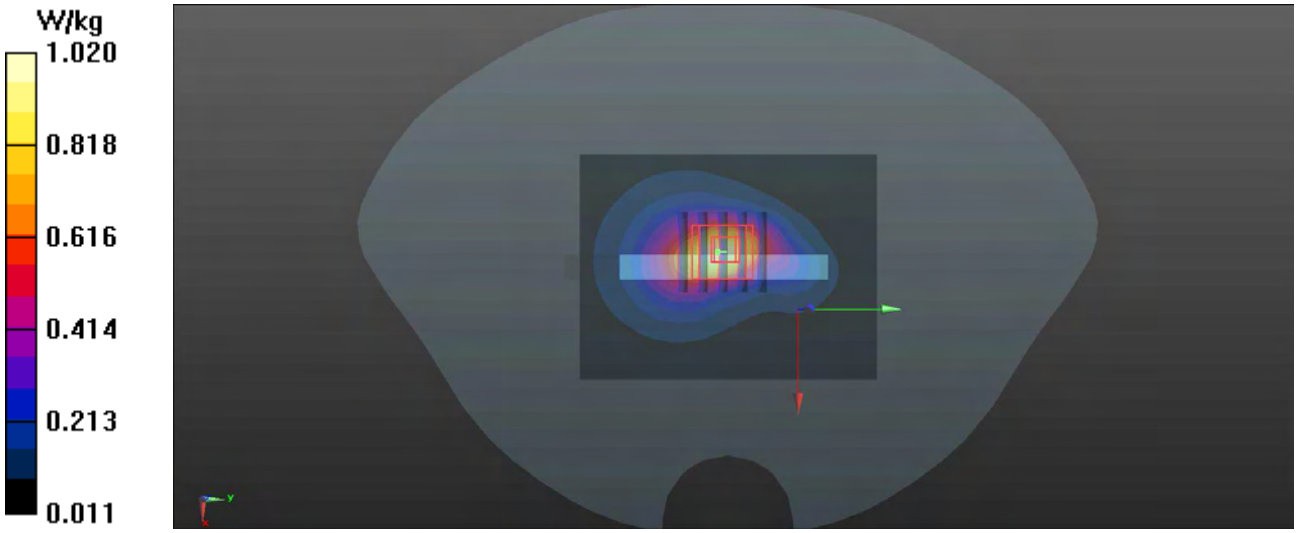

P14 WCDMA II_RMC12.2K_Bottom Side_1cm_Ch9400

DUT: 151125W002

Communication System: WCDMA; Frequency: 1880 MHz;Duty Cycle: 1:1
Medium: B1900_1204 Medium parameters used: f = 1880 MHz; σ = 1.539 S/m; ε_r = 54.827; ρ = 1000 kg/m^3
Ambient Temperature：21.8 ℃; Liquid Temperature：20.9 ℃

DASY5 Configuration:
- Probe: EX3DV4 - SN3873; ConvF(7.62, 7.62, 7.62); Calibrated: 2015/08/26;
- Sensor-Surface: 1.4mm (Mechanical Surface Detection)
- Electronics: DAE4 Sn1341; Calibrated: 2015/08/25
- Phantom: Front Phantom with CRP v5.0; Type: QD000P40CD; Serial: TP:1695
- Measurement SW: DASY52, Version 52.8 (8); SEMCAD X Version 14.6.10 (7331)

- Area Scan (61x81x1): Interpolated grid: dx=1.500 mm, dy=1.500 mm
Maximum value of SAR (interpolated) = 0.898 W/kg

- Zoom Scan (5x5x7)/Cube 0: Measurement grid: dx=8mm, dy=8mm, dz=5mm
Reference Value = 18.86 V/m; Power Drift = 0.02 dB
Peak SAR (extrapolated) = 1.13 W/kg
SAR(1 g) = 0.674 W/kg; SAR(10 g) = 0.369 W/kg
Maximum value of SAR (measured) = 0.970 W/kg

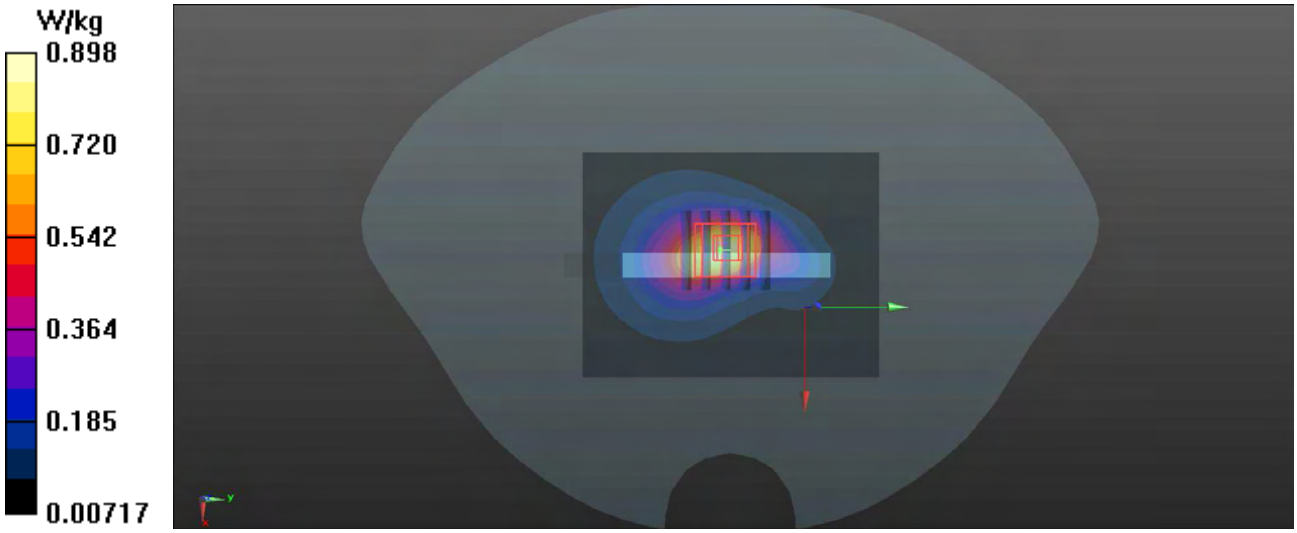

P15 WCDMA V_RMC12.2K_Rear Face_1cm_Ch4182

DUT: 151125W002

Communication System: WCDMA; Frequency: 836.4 MHz;Duty Cycle: 1:1
Medium: B835_1204 Medium parameters used: f = 836.4 MHz; σ = 0.979 S/m; ε_r = 55.638; ρ = 1000 kg/m^3
Ambient Temperature：21.8 ℃； Liquid Temperature：20.9 ℃

DASY5 Configuration:
- Probe: EX3DV4 - SN3873; ConvF(9.72, 9.72, 9.72); Calibrated: 2015/08/26;
- Sensor-Surface: 1.4mm (Mechanical Surface Detection)
- Electronics: DAE4 Sn1341; Calibrated: 2015/08/25
- Phantom: Left Phantom with CRP v5.0; Type: QD000P40CD; Serial: TP:1722
- Measurement SW: DASY52, Version 52.8 (8); SEMCAD X Version 14.6.10 (7331)

- Area Scan (81x131x1): Interpolated grid: dx=1.500 mm, dy=1.500 mm
Maximum value of SAR (interpolated) = 0.406 W/kg

- Zoom Scan (5x5x7)/Cube 0: Measurement grid: dx=8mm, dy=8mm, dz=5mm
Reference Value = 16.75 V/m; Power Drift = 0.01 dB
Peak SAR (extrapolated) = 0.503 W/kg
SAR(1 g) = 0.275 W/kg; SAR(10 g) = 0.158 W/kg
Maximum value of SAR (measured) = 0.424 W/kg

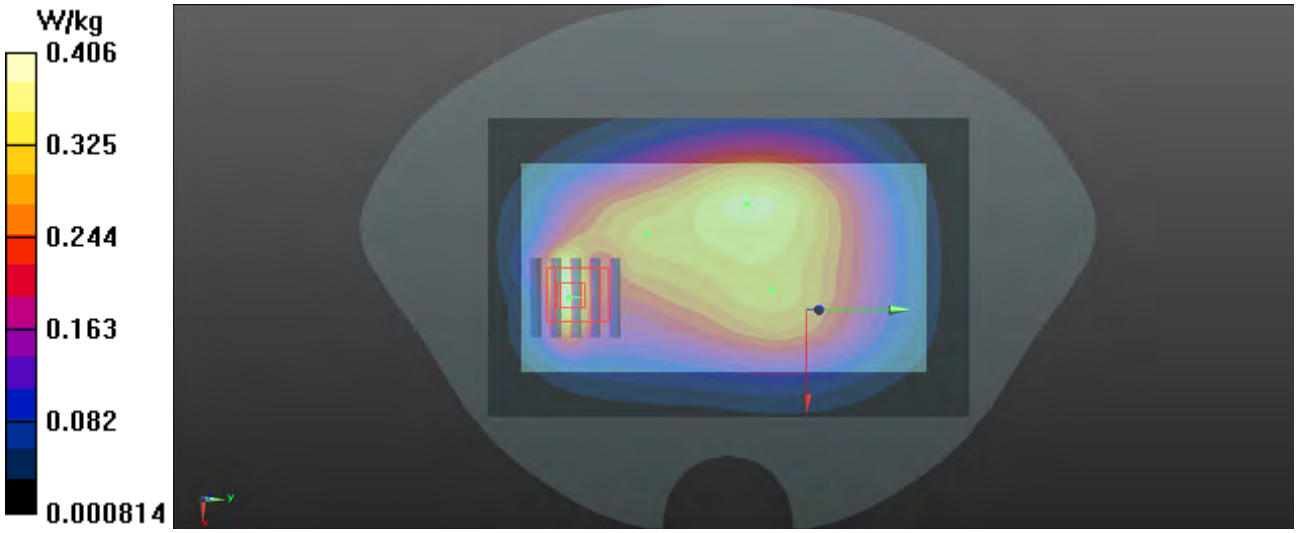

P16 802.11b_Rear Face_1cm_Ch6

DUT: 151125W002

Communication System: 802.11b; Frequency: 2437 MHz;Duty Cycle: 1:1
Medium: B2450_1208 Medium parameters used: f = 2437 MHz; σ = 1.887 S/m; ε_r = 51.45; ρ = 1000 kg/m^3
Ambient Temperature：22.1 ℃； Liquid Temperature：21.2 ℃

DASY5 Configuration:
- Probe: EX3DV4 - SN3873; ConvF(7.3, 7.3, 7.3); Calibrated: 2015/08/26;
- Sensor-Surface: 1.4mm (Mechanical Surface Detection)
- Electronics: DAE4 Sn1341; Calibrated: 2015/08/25
- Phantom: Front Phantom with CRP v5.0; Type: QD000P40CD; Serial: TP:1695
- Measurement SW: DASY52, Version 52.8 (8); SEMCAD X Version 14.6.10 (7331)

- Area Scan (91x161x1): Interpolated grid: dx=1.200 mm, dy=1.200 mm
Maximum value of SAR (interpolated) = 0.158 W/kg

- Zoom Scan (5x5x7)/Cube 0: Measurement grid: dx=8mm, dy=8mm, dz=5mm
Reference Value = 1.893 V/m; Power Drift = 0.04 dB
Peak SAR (extrapolated) = 0.210 W/kg
SAR(1 g) = 0.100 W/kg; SAR(10 g) = 0.048 W/kg
Maximum value of SAR (measured) = 0.171 W/kg

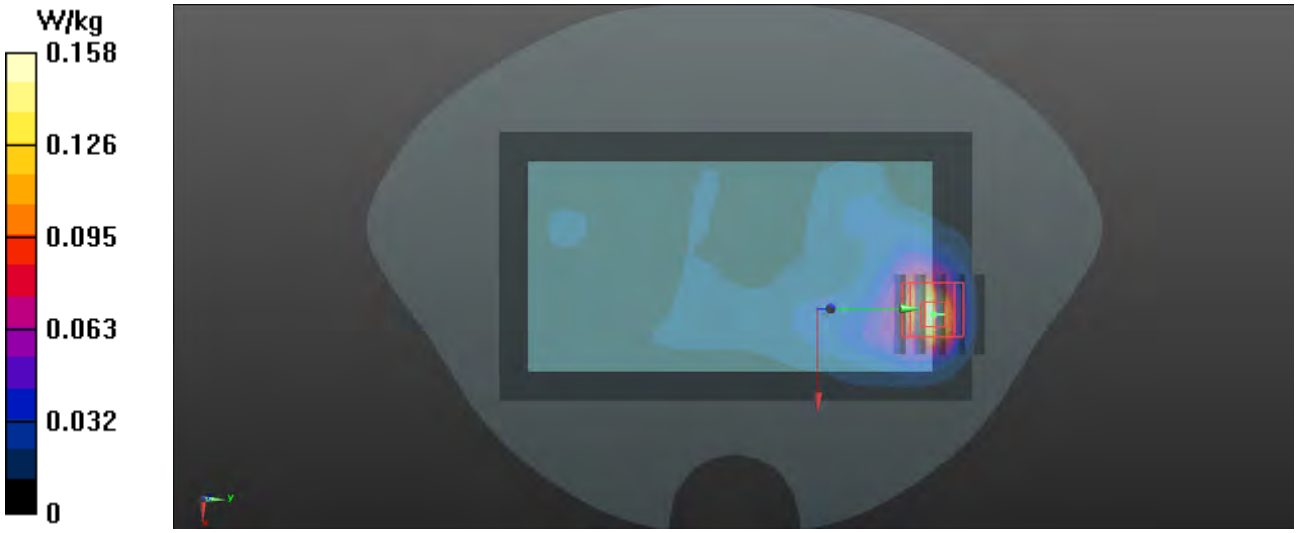

P17 802.11a_Rear Face_0cm_Ch64

DUT: 151125W002

Communication System: 802.11a; Frequency: 5320 MHz;Duty Cycle: 1:1.03
Medium: B5G_1208 Medium parameters used: f = 5320 MHz; σ = 5.438 S/m; ε_r = 48.649; ρ = 1000 kg/m^3
Ambient Temperature：22.1 ℃； Liquid Temperature：21.2 ℃

DASY5 Configuration:
- Probe: EX3DV4 - SN3873; ConvF(4.4, 4.4, 4.4); Calibrated: 2015/08/26;
- Sensor-Surface: 1.4mm (Mechanical Surface Detection)
- Electronics: DAE4 Sn1341; Calibrated: 2015/08/25
- Phantom: Left Phantom with CRP v5.0; Type: QD000P40CD; Serial: TP:1722
- Measurement SW: DASY52, Version 52.8 (8); SEMCAD X Version 14.6.10 (7331)

- Area Scan (101x191x1): Interpolated grid: dx=1.000 mm, dy=1.000 mm
Maximum value of SAR (interpolated) = 1.67 W/kg

- Zoom Scan (7x7x12)/Cube 0: Measurement grid: dx=5mm, dy=5mm, dz=2mm
Reference Value = 1.356 V/m; Power Drift = 0.04 dB
Peak SAR (extrapolated) = 2.58 W/kg
SAR(1 g) = 0.457 W/kg; SAR(10 g) = 0.145 W/kg
Maximum value of SAR (measured) = 1.41 W/kg

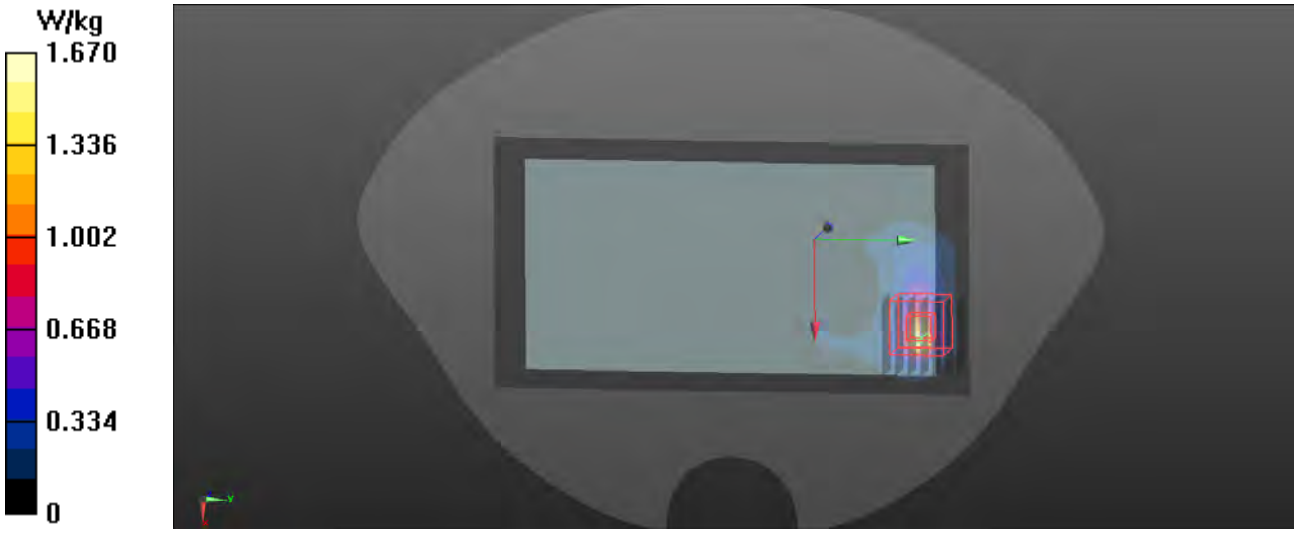

P18 802.11a_Rear Face_0cm_Ch153

DUT: 151125W002

Communication System: 802.11a; Frequency: 5765 MHz;Duty Cycle: 1:1.03
Medium: B5G_1208 Medium parameters used: f = 5765 MHz; σ = 6.034 S/m; ε_r = 47.907; ρ = 1000 kg/m^3
Ambient Temperature：22.1 ℃； Liquid Temperature：21.2 ℃

DASY5 Configuration:
- Probe: EX3DV4 - SN3873; ConvF(4.02, 4.02, 4.02); Calibrated: 2015/08/26;
- Sensor-Surface: 1.4mm (Mechanical Surface Detection)
- Electronics: DAE4 Sn1341; Calibrated: 2015/08/25
- Phantom: Left Phantom with CRP v5.0; Type: QD000P40CD; Serial: TP:1722
- Measurement SW: DASY52, Version 52.8 (8); SEMCAD X Version 14.6.10 (7331)

- Area Scan (101x191x1): Interpolated grid: dx=1.000 mm, dy=1.000 mm
Maximum value of SAR (interpolated) = 3.12 W/kg
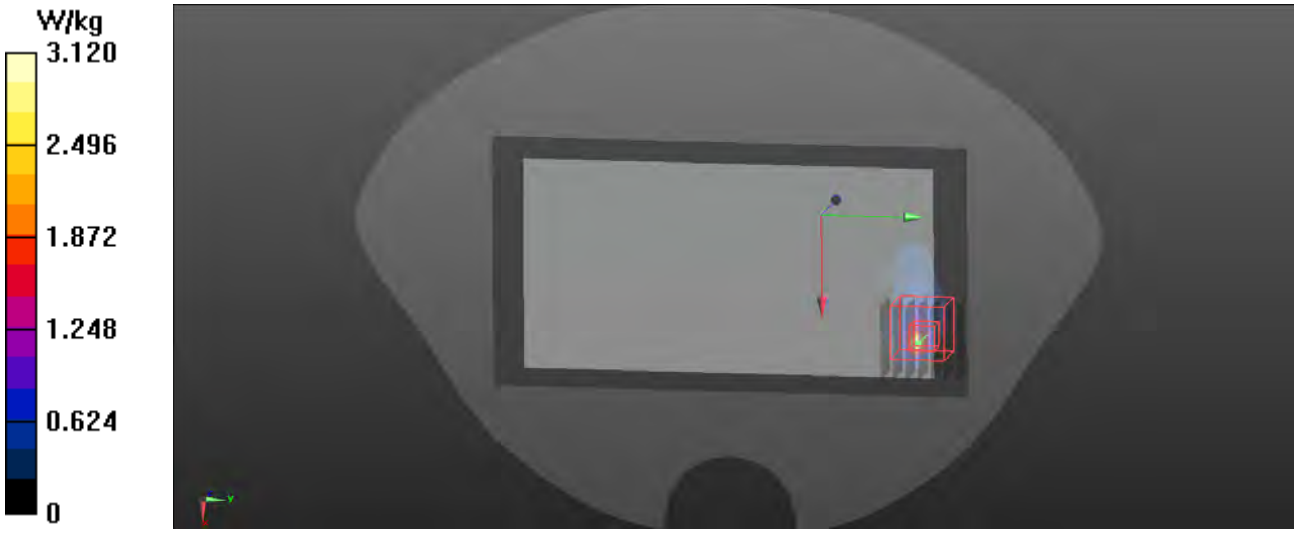
- Zoom Scan (7x7x12)/Cube 0: Measurement grid: dx=5mm, dy=5mm, dz=2mm
Reference Value = 1.560 V/m; Power Drift = -0.05 dB
Peak SAR (extrapolated) = 5.65 W/kg
SAR(1 g) = 0.787 W/kg; SAR(10 g) = 0.177 W/kg
Maximum value of SAR (measured) = 2.99 W/kg