Electrohome
Since 1907

RR75 7-in-1 Vinyl Record Player

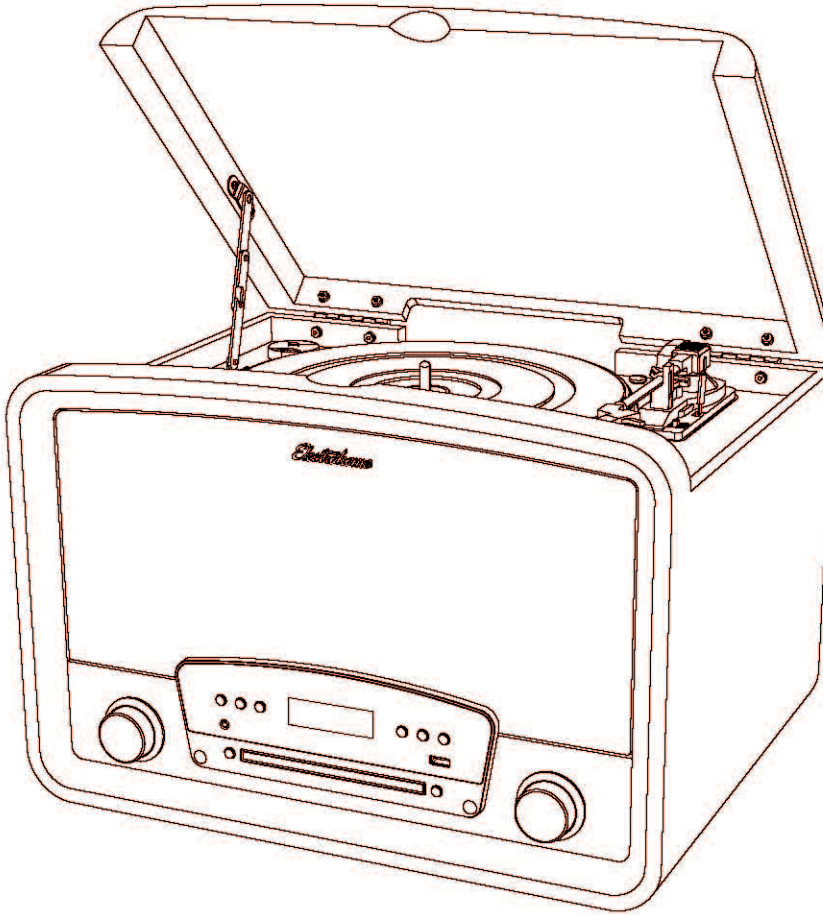

User Manual v1.0

INTRODUCTION

Since 1907 Electrohome has been developing high fidelity audio products & has been welcomed into homes for generations. One thing that remains the same in our more than 100 year history is our unmatched dedication to design and premium craftsmanship.

Thank you for your purchase of this Electrohome® product.
We hope you enjoy your experience.

Questions?
Give us a chance to help, we're just a click away.

Electrohome.com/resources

Electrohome.com/videos

Electrohome.com/support

Electrohome.com/contact

Don't forget to register your product with us!

Electrohome.com/registration

TABLE OF CONTENTS

What's Included **3**

Product Information **4**
- Front Panel 4
- Back Panel 4
- Remote Control 5
- Turntable 5

First Time Setup **6**
- Positioning the System 6
- Connecting to Power 6
- Turning the Unit ON/OFF 7
- Changing Sources 7
- Adjusting the EQ Settings 7
- Playing a Record 7
- Adjusting the Volume 7
- Playing the Radio and Radio Presets 8
- Playing From a Bluetooth® Device 8
- Playing from an AUX Device 8
- Playing a CD 8
- Playing from USB 9
- Recording to USB 9
- Recording from PHONO/AUX/Bluetooth® 9
- Recording from CD 9
- Connecting Headphones 10
- Connecting to an Amplifier 10

Care and Maintenance **11**
- Cleaning the System 11
- Stylus Care 11
- Replacing the Stylus 11
- Record Care 11

Frequently Asked Questions **12**

Specifications **14**

Certification Information **15**

Important Safety Instructions **16**

Warranty Information **18**

WHAT'S INCLUDED

- 7-in-1 Vinyl Record Player
- RCA Cable
- 45 Adapter
- Power Cable
- Remote Control
- 2 'AAA' Batteries
- Quick Start Guide
- User Manual
- 1 Year Warranty
- Lifetime Customer Support

PRODUCT INFORMATION

Front Panel

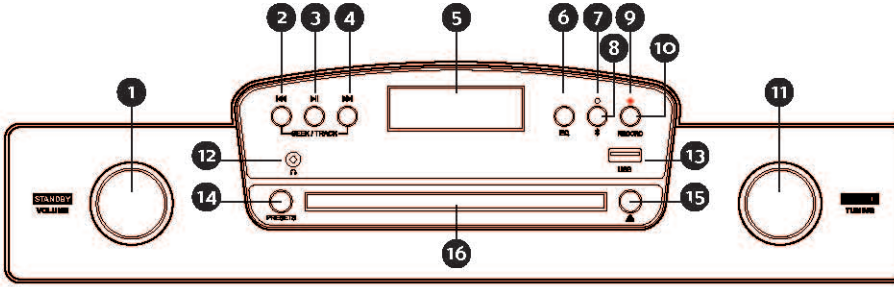

1. Standby Knob
   - Press - Power ON/OFF
   - Turn - Volume UP/DOWN
2. Previous Track/Rewind/Tuning
3. Play/Pause
4. Next Track/Fast Forward/Tuning
5. LCD Screen
6. EQ Settings - Bass/Treble
7. Bluetooth® Pairing LED
   - Solid - Paired
   - Flashing - Pairing Mode
8. Bluetooth®
   - Tap - Bluetooth Source
   - Hold - Reset Bluetooth Pairing
9. Recording LED
   - Flashing - Recording
10. USB Recording
11. Source Knob
    - Press - Source
    - Turn - AM/FM Tuning
12. Headphone Jack
13. USB Port - Recording/Playback
14. AM/FM Presets - Cycle/Set
    - Play Mode - Repeat/Shuffle
15. CD Eject
16. CD Tray

Back Panel

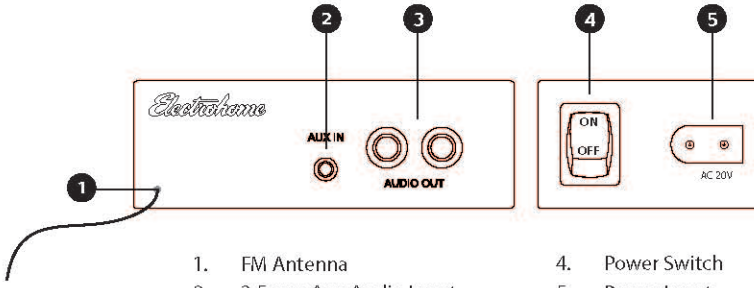

1. FM Antenna
2. 3.5 mm Aux Audio Input
3. RCA Audio Output
4. Power Switch
5. Power Input

Remote Control

1. Power
2. Source Selection
3. Up/Down Arrow (Preset/Folder)
4. Play/Pause
5. Left/Right Arrow (Tuning/Track)
6. EQ Settings – Bass/Treble
7. AM/FM Presets - Cycle/Set
   Play Mode - Repeat/Shuffle
8. Bluetooth®
   Tap - Bluetooth Source
   Hold - Reset Bluetooth Pairing
9. Volume Up/Down

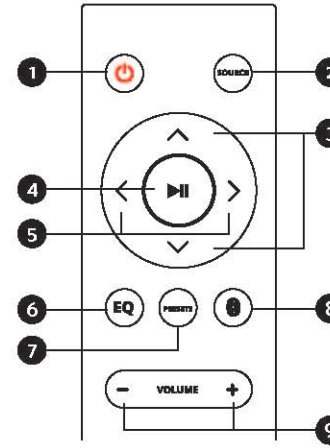

Turntable

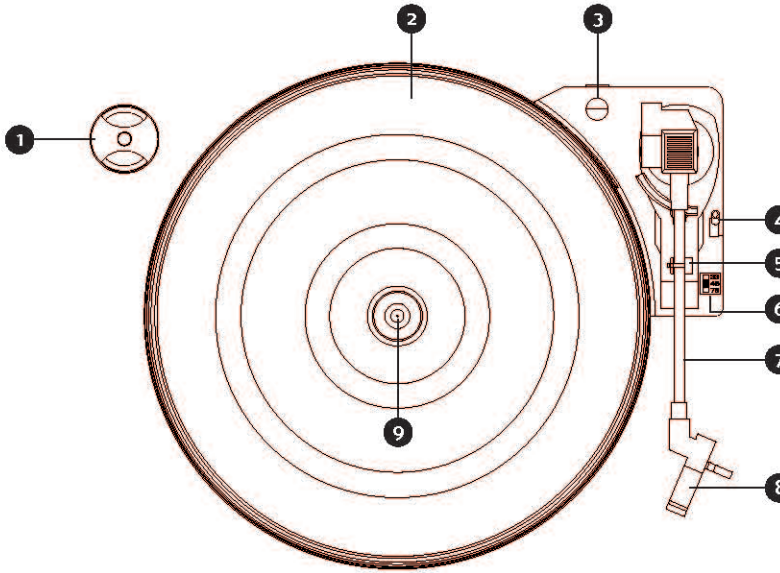

1. 45 Adapter
2. Platter
3. Transit Screw
4. Cueing Lever
5. Tonearm Lock
6. Speed Selection Switch
7. Tonearm
8. Stylus
9. Spindle

FIRST TIME SETUP

Positioning the System

1. Unpack the system and remove all protective packaging. Please keep packaging for warranty and transportation purposes.

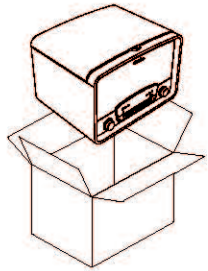

2. Place the system on a sturdy and level surface.

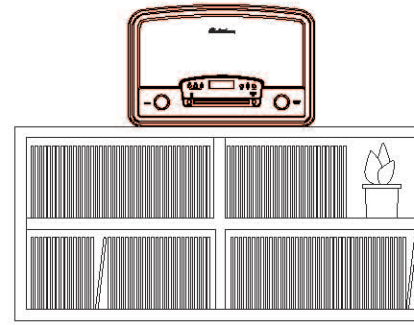

3. Open the lid and turn the Transit Screw Clockwise to release the turntable for playback.

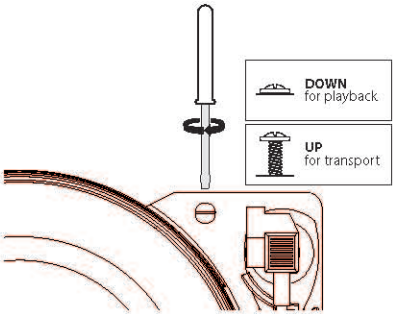

4. Extend the FM antenna and position for optimal FM reception.

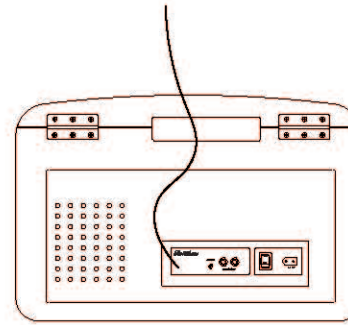

Connecting to Power

Connect the power cable to the power input on the back of the system and connect the other end of the power cable to a power outlet. Set the power switch on the back of the unit to the ON position.

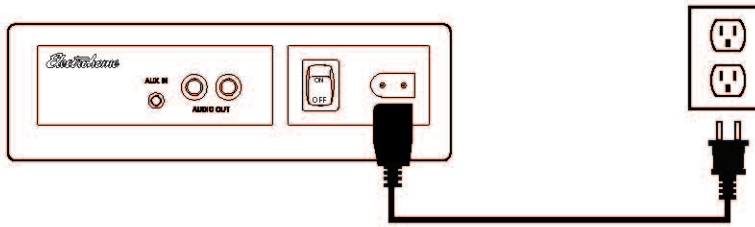

Turning the Unit ON/OFF

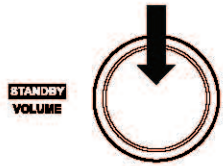

Press the STANDBY knob on the unit or POWER button on the remote control to turn the unit on or off.

Note: Ensure the power switch on the back of the unit is set to ON.

Adjusting the Volume

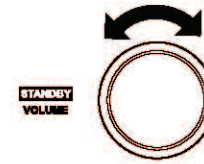

Turn the STANDBY knob on the unit to raise or lower the volume on the system.

IMPORTANT: When playing music from an external source, such as a smartphone, ensure the volume is adjusted on it as well.

Adjusting the EQ Settings

1. Press EQ on the unit or the remote to enter EQ Settings starting with Bass
2. Use ❮ or ❯ on remote or TUNING knob on the unit to adjust the EQ value (-3 to +3)
3. Press EQ to change to EQ settings for Treble
4. Use ❮ or ❯ on remote or TUNING knob on the unit to adjust the EQ value (-3 to +3)
5. Press EQ again to exit the EQ Settings

Changing Sources

Press the SOURCE knob on the unit or SOURCE button on the remote control to change sources. The selected source will be shown on the display.

PHONO AUX CD USB BT FM AM

PHONO Playing a Record

1. Change to PHONO source
2. Lift the lid and lock the hinge to secure it in place
3. Place a record on the turntable platter
4. Ensure the transit screw is fully lowered
5. Set the speed selection switch to match your record
6. Remove the stylus protector from the stylus on the end of the tonearm
7. Unlock the tonearm lock
8. Lift the cueing lever to lift the tonearm
9. Position the tonearm over the record
10. Lower the cueing lever to lower the tonearm to the record
11. The turntable will automatically stop spinning at the end of the record
12. Once playback is complete return the tonearm to the tonearm rest and lock in place
13. To close the lid, lift the lid to unlock the hinge and pull the hinge toward you allowing the lid to fully lower

Note: The RR75 features an auto stop function but does not have an automatic tonearm return function. The tonearm must be manually returned to the tonearm rest.

See page 9 for steps on Recording from the turntable.

FM AM Playing the Radio and Radio Presets

1. Change to FM or AM source
2. Use TUNING knob or ⏮ and ⏭ on the unit or ❮ and ❯ on the remote to change to desired station
3. To set as a radio preset press and hold PRESETS on the unit or on the remote to enter preset setting
4. Use tuning knob or ⏮ and ⏭ on the unit or ❮ and ❯ on the remote to select desired preset number
5. Press PRESETS to set the preset
6. Use PRESETS on the unit or PRESETS and ⌃ and ⌄ on the remote to select presets

Note: The RR75 supports up to 5 presets for AM stations and 5 presets for FM stations.

BT Playing From a Bluetooth® Device

The RR75 can pair to one Bluetooth® device at a time. The amber Bluetooth® Pairing LED will flash when in pairing mode and will be solid when paired.

The RR75 also features auto-pairing which means that it will re-pair with the last connected Bluetooth® device when the Bluetooth® source is selected.

1. Change to Bluetooth® source using Bluetooth button on unit or remote
2. Pair to "Electrohome RR75" on your source device (smartphone or tablet)
3. Use the playback buttons on the unit and remote to control playback or use the source device itself
4. Adjust the volume on your source device as well as on the unit

Note: If your device cannot find "Electrohome RR75", you can reset Bluetooth® pairing. Press and hold the Bluetooth® button on the unit or the remote for 3 seconds to reset pairing.

AUX Playing from an AUX Device

1. Connect a 3.5mm Aux cable to the headphone jack on your source device (smartphone or tablet)
2. Connect the other end of the Aux cable to the AUX port on the back of the unit
3. Change to AUX source
4. Control playback on your source device
5. Adjust the volume on your source device as well as on the unit

CD Playing a CD

1. Change to CD source
2. Press the eject button on the front of the unit
3. Place a CD in the tray
4. Press the eject button to close the tray
5. Use ⏮ and ⏭ on the unit or ❮ and ❯ on the remote to change songs
6. Hold ⏮ and ⏭ or ❮ and ❯ to rewind/fast forward
7. Use ⌃ and ⌄ on the remote to change folders on MP3 CDs
8. Press ⏯ on the unit or on the remote to pause and resume playback
9. Press PRESETS on the unit or on the remote to toggle between Repeat Track, Repeat Folder, Repeat All, and Shuffle

USB Playing from USB

1. Change to USB source
2. Insert USB Thumb Drive into USB port on the front of the unit
3. Use ⏮ and ⏭ on the unit or ❮ and ❯ on the remote to change songs
4. Hold ⏮ and ⏭ or ❮ and ❯ to rewind/fast forward
5. Use ⌃ and ⌄ on the remote to change folders
6. Press ▶II on the unit or on the remote to pause and resume playback
7. Press PRESETS on the unit or on the remote to toggle between Repeat Track, Repeat Folder, Repeat All, and Shuffle

PHONO AUX CD BT

Recording to USB

The RR75 can record from PHONO, AUX, CD, and Bluetooth®. Files are saved in 128kbps quality. **The USB drive must be formatted in FAT32 and 32GB or less**. If the USB is not compatible or not recognized the display will show "Error".

Recording from PHONO/AUX/Bluetooth®

1. Change to PHONO/AUX/Bluetooth® source
2. Insert USB drive into USB Port on front of the unit
3. Play music and press RECORD on the unit to begin recording. The Recording LED will be flashing red when recording
4. Press ⏭ on the unit or ❯ on the remote to split the track. This can be used to split songs during recording without stopping recording
5. Press ▶II on the unit or on the remote to pause recording and press again to resume recording
6. Press RECORD to stop recording

Note: Files will be saved in the following location on the USB drive: /RECORD/EXREC

Recording from CD

When recording from CD the RR75 will lock playback control until recording is finished. Recording can be stopped at anytime but cannot be paused or tracks changed during recording.

1. Change to CD source
2. Insert USB drive into USB Port on front of the unit
3. Press RECORD on the unit to begin recording
4. Use ⏮ and ⏭ on the unit or ❮ and ❯ on the remote to select RECORD ONE, RECORD FOLDER, RECORD ALL
5. Press RECORD to start recording. The Recording LED will be flashing red when recording
6. Press RECORD to stop recording

Note: Files will be saved in the following location on the USB drive: /RECORD/COPY

Connecting Headphones

1. Connect the headphones to the headphone jack on the front of the system
2. Use the desired source on the RR75
3. Adjust playback volume on the RR75

IMPORTANT: The speakers on the RR75 are disabled when headphones are connected to the headphone jack. To resume normal playback the headphones must be disconnected.

Connecting to an Amplifier

The RR75 can be connected to an external amplifier to integrate it into an existing home audio system. It is recommended to lower volume on RR75 to 0 when using an external home audio system as each device's volume is controlled independently. The RCA Audio Output signal is not affected by the RR75's volume or EQ settings.

1. Connect an RCA cable to the RCA Audio Output on the back of the RR75
2. Connect the other end of the RCA cable to an audio input on your amplifier
3. Select the selected audio input your amplifier
4. Use the desired source on the RR75
5. Adjust playback volume on your amplifier

NOTE: Ensure the RCA cable is not connected to a PHONO input on your amplifier as this can over-amplify the audio signal causing damage to the amplifier and speakers.

CARE AND MAINTENANCE

Cleaning the System

1. Use a soft dry cloth to wipe dust from the RR75
2. Keep the lid closed to ensure the turntable components remain dust free

Stylus Care

The jeweled stylus installed in your turntable should last for up to 300 hours of playback with 33 RPM albums or 45 RPM 'Singles'. If you are playing older 78 RPM records, which are made from a much harder material, the life expectancy of the stylus will be reduced.

When the playback sound becomes distorted and unsatisfactory:

1. Please confirm that no dust or lint has accumulated on the stylus tip.
2. If there is visible foreign matter on the tip of the stylus, please remove it carefully with a soft stylus-cleaning brush.

If there is no visible foreign matter on the stylus and the sound is still unsatisfactory, it is likely that the stylus is worn and needs to be replaced.

Replacement stylus is available at www.electrohome.com

Replacing the Stylus

1. Lift the tonearm off the tonearm rest
2. Place the tip of your fingernail between the stylus and the cartridge housing
3. Press down on the stylus until it separates from the cartridge housing
4. Completely remove the stylus with worn stylus and discard it
5. Place the new stylus under the cartridge housing and press upward on the back edge of the stylus holder
6. Then press up on the front edge of the stylus until it snaps into place on the cartridge housing

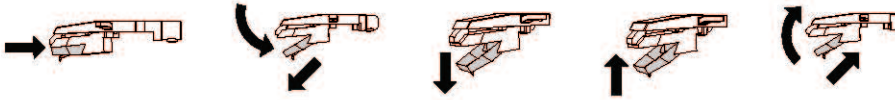

Record Care

1. Records should be stored vertically in a dry environment away from sources of heat.
2. An anti-static brush can be used to remove dirt from the record's grooved surface. Use a record cleaning solution to further clean your records to ensure crystal clear playback.
3. It is important to use the cueing lever when lifting or lowering the tonearm to prevent accidental slipping and scratching.

FREQUENTLY ASKED QUESTIONS

The RR75 is not turning on
Confirm the power cable is fully inserted into the back of the RR75 and that the power switch on the back on the unit is set to the ON position. Try to turn the system on by pressing the Standby knob or use the Power button on the remote. If the issue persists connect the RR75 in a different power outlet.

My turntable will not spin or play a record
Please ensure the system is plugged into a known good outlet and that the power is turned on. Raise the lid to expose the turntable. Moving the tonearm above the record should trigger the platter to start spinning.

My turntable seems to wobble
It is normal for a turntable to have a slight wobble, however this should not affect audio quality. If your turntable is wobbling and you are concerned, first make sure you have the turntable on a flat surface. Next check the transit screw to ensure it was fully lowered.

What do I do if my records are skipping?
Ensure that the RR75 is setup on a level and sturdy surface. It is also important to ensure your records are kept clean and stored properly to prevent warping. If the issue persists it is recommended to test with other records.

I'm experiencing feedback when listening to records
Feedback can occur when the volume is too loud in the environment where the record is being played. The stylus can pick up this noise and send it back into the system causing feedback. If you experience feedback adjust the EQ settings on the RR75 to decrease Bass or lower the RR75 volume. If using external speakers it is recommended to place the speakers on a separate surface directed away from the RR75.

Is it normal to hear pops and crackling when playing a record?
Dirt and debris on a record can cause popping and crackling noises. It is important to properly clean your records to ensure they are in the best condition for playback. Popping and crackling can also be caused by scratches, wear over time, or inherent flaws from vinyl production.

I have poor radio reception
Ensure the FM radio wire is unraveled and is secured in a location free from sources of interference. If AM and FM stations are still not coming in clearly try moving the unit to a new location and test again.

Tonearm auto stop is not functioning properly
If your unit's tonearm auto stop is not stopping or stopping too early it is recommended to test with additional records. Due to variances in vinyl record production some records may not work correctly with the auto stop function. Please note that the RR75 does not have an automatic tonearm return function. The tonearm must be manually returned to the tonearm rest.

Can I charge my MP3 player with the USB port?
The USB port is for playback or recording. The USB port will not charge a device, nor allow an MP3 player to play music. If you would like to play audio from an iPod, iPhone, or an Android device please use the Aux In or Bluetooth functions.

My records play too fast or too slow
There is a speed selector switch located under the lid of the turntable. The speed selector switch has 3 different speed settings (33 RPM, 45 RPM or 78 RPM). Please ensure that you have selected the correct setting based on the record you are attempting to play. To change the speed, please adjust the selector switch to the required speed for the record you are playing.

My CD player will not play a CD
If you are experiencing difficulties with your CD player, please try testing the unit with a store bought CD to rule out any incompatibility issues. If the issue is on a specific CD it is recommended to clean the CD and test again.

I think I need to replace my stylus
The jeweled stylus installed in your turntable should last for up to 300 hours of playback with 33 RPM albums or 45 RPM 'Singles'. If you are playing older 78 RPM records, which are made from a much harder material, the life expectancy of the stylus will be reduced. First we would recommend ensuring that the stylus is free of debris. Using a soft stylus cleaning brush to gently clean the stylus tip may improve sound quality. If this does not improve the sound quality a new stylus is available at: www.electrohome.com

What is "auto-pairing" and how does it work?
Auto-pairing is a convenient connection feature included on this system. If the connected Bluetooth®-enabled device leaves the connection range of the system and returns at a later time, the device will automatically connect. If the device's Bluetooth® function is disabled and then enabled at a later time, the device will automatically connect as well.
**Note: The Electrohome RR75 will only auto-pair to the last device that it was connected to.*

Another device is connected to my Electrohome RR75 and I want to connect my device.
You can reset any Bluetooth® connection by pressing and holding the Bluetooth® button on the unit or remote for 3 seconds.

What is the range of my Bluetooth® Connection?
The Electrohome RR75 operates with Power Class 2 Bluetooth® devices, which have a range of approximately 33 feet (line of sight).

Electrohome RR75 is not showing as an available device on my Bluetooth device.
Ensure the RR75 is not paired to another device. You can reset Bluetooth using the Bluetooth button on the unit or on the remote. Next turn Bluetooth off and back on in your device's Bluetooth settings. If the RR75 is still not available you can reboot your device and check again.

SPECIFICATIONS

Finish	Real Wood Veneer
Cabinet Material	MDF (Medium Density Fiberboard)
Record Player	Yes, Belt drive
Cartridge	Ceramic
Record Speeds	33 1/3, 45, 78 RPM
Auto Return	No
FM Radio	Yes, 88 - 108 MHz
AM Radio	Yes, 530-1710 kHz
Radio Station Presets	5 AM, 5 FM
Bluetooth	Yes
CD	Yes, MP3/WMA/WAV
USB Playback	Yes, MP3/WMA/WAV, USB Drive (FAT32/exFAT)
USB Charging	No
USB Recording	Yes, USB (MP3 128 kbps)
Headphone Jack	Yes, 3.5 mm
Auxiliary Input	Yes, 3.5 mm
Audio Output	RCA (L/R) Output
Speaker Size	2 x 2", 10 W, 8 Ohms, 2 x 3.5", 30 W, 6 Ohms
Equalizer	Yes (Bass, Treble)
Power Input	120 V, 60 Hz
Power Consumption	50 Watts
Dimensions	17.25 x 12.25 x 13.75 inches
Unit Weight	23.75 lbs
Certifications	ICES, FCC Certified, NRCAN, ETL/CETL

CERTIFICATION INFORMATION

FCC Statement

This device complies with Part 15 of the FCC Rules. Operation is subject to the following two conditions: (1) This device may not cause harmful interference, and (2) this device must accept any interference received, including interference that may cause undesired operation.

NOTE: This equipment has been tested and found to comply with the limits for a Class B digital device, pursuant to Part 15 of the FCC Rules. These limits are designed to provide reasonable protection against harmful interference in a residential installation. This equipment generates uses and can radiate radio frequency energy and, if not installed and used in accordance with the instructions, may cause harmful interference to radio communications. However, there is no guarantee that interference will not occur in a particular installation. If this equipment does cause harmful interference to radio or television reception, which can be determined by turning the equipment off and on, the user is encouraged to try to correct the interference by one of the following measures:

- Reorient or relocate the receiving antenna.
- Increase the separation between the equipment and receiver.
- Connect the equipment into an outlet on a circuit different from that to which the receiver is connected.
- Consult the dealer or an experienced radio/TV technician for help.

WARNING: Any changes or modifications not expressly approved by the party responsible for compliance could void the user's authority to operate this equipment.

The device must not be co-located or operating in conjunction with any other antenna or transmitter.

To maintain compliance with the FCC's RF exposure guidelines, place the product at least 20cm from nearby

IC Statement

This device complies with RSS247 of Industry Canada. *Cet appareil se conforme à RSS247 de Canada d'Industrie.*
This device complies with Industry Canada license-exempt RSS standard(s). Operation is subject to the following two conditions: (1) this device may not cause interference, and (2) this device must accept any interference, including interference that may cause undesired operation of the device.
appareils radio exempts de licence. Son fonctionnement est sujet aux deux conditions suivantes: (1) le dispositif ne doit pas produire de brouillage prejudiciable, et (2) ce dispositif doit accepter tout brouillage recu, y compris un brouillage susceptible de provoquer un fonctionnement indesirable.

The device must not be co-located or operating in conjunction with any other antenna or transmitter.
L'appareil ne doit pas être localisé ou fonctionner avec d'autres antennes ou transmetteurs.

This device complies with IC radiation exposure limits set forth for an uncontrolled environment.
Cet appareil est conforme aux limites d'exposition aux rayonnements de la IC établies pour un incontrôlé environnement.

The device should be installed and operated with a minimum distance of 20cm between the radiator and your body.
L'appareil doit être installé et utilisé avec une distance minimale de 20 cm entre le radiate et votre corps.

The lightning flash with arrowhead symbol within an equilateral triangle is intended to alert the user to the presence of uninsulated "dangerous voltage" within the product's enclosure that may be of sufficient magnitude to constitute a risk of electric shock to persons.

CAUTION

RISK OF ELECTRIC SHOCK
DO NOT OPEN

CAUTION: TO PREVENT RISK OF ELECTRIC SHOCK, DO NOT REMOVE COVER (OR BACK). NO USER-SERVICEABLE PARTS INSIDE. REFER SERVICING TO QUALIFIED SERVICE PERSONNEL.

The exclamation point within an equilateral triangle is intended to alert the user to the presence of important operating and maintenance (servicing) instructions in the literature accompanying the appliance.

CAUTION: To reduce the risk of fire or electric shock, do not expose this appliance to rain or moisture.
WARNING: To prevent electric shock, do not use this (polarized) plug with an extension cord, receptacle or other outlet unless the blades can be fully inserted to prevent blade exposure

WARNING: Invisible laser radiation when open and interlock failed or defeated. Avoid direct exposure to laser beam.

This equipment is a Class II or double insulated electrical appliance. It has been designed in such a way that it does not require a safety connection to electrical earth.

IMPORTANT SAFETY INSTRUCTIONS

1. Read these instructions – All the safety and operating instructions should be read before this product is operated.
2. Keep these instructions- The safety and operating instructions should be retained for future reference.
3. Heed all warnings – All warnings on the appliance and in the operating instructions should be adhered to.
4. Follow all instructions – All operating and use instructions should be followed.
5. Do not use this apparatus near water – The appliance should not be used near water or moisture – for example, in a wet basement or near a swimming pool, and the like.
6. Clean only with dry cloth.
7. Do not block any ventilation openings. Install in accordance with the manufacturer's instructions.
8. Do not install near any heat sources such as radiations, heat registers, stoves, or other apparatus (including amplifiers) that produce heat.
9. Do not defeat the safety purpose of the polarized or grounding plug. A polarized plug has two blades with one wider than the other. A grounding plug has two blades and a third grounding prong. The wide blade or the third prong is provided for your safety. If the provided plug does not fit into your outlet, consult an electrician for replacement of the obsolete outlet.
10. Protect the power cord from being walked on or pinched particularly at the plugs, convenience receptacles, and at the point where they exit from the apparatus.
11. Only use attachments/accessories specified by the manufacturer.
12. Use only with the cart, stand, tripod, bracket, or table specified by the manufacturer, or sold with the apparatus. When a cart or rack is used, use caution when moving the cart/apparatus combination to avoid injury from tip-over.

13. Unplug the apparatus during lighting storms or when unused for long periods of time.
14. Refer all servicing to qualified personnel. Servicing is required when the apparatus has been damaged in any way, such as power supply cord or plug is damaged, liquid has been spilled or objects have fallen into the apparatus has been exposed to rain or moisture, does not operate normally, or has been dropped.

CAUTION/ATTENTION:

RISK OF ELECTRIC SHOCK. DO NOT OPEN. / ATTENTION RISQUE DE CHOC ÉLECTRIQUE. NE PAS OUVRIR.

15. This lightning flash with arrowhead symbol within an equilateral triangle is intended to alert the user to the presence of non-insulated "dangerous voltage" within the product's enclosure that may be of sufficient magnitude to constitute a risk of electric shock.

- Warning: To reduce the risk of electric shock, do not remove cover (or back) as there are no user-serviceable parts inside. Refer servicing to qualified personnel.
- The exclamation point within and equilateral triangle is intended to alert the user to the presence of important operating and maintenance instructions in the literature accompanying the appliance

16. This equipment is a Class II or double insulated electrical appliance. It has been designed in such a way that it does not require a safety connection to electrical earth.
17. The mains plug is used as disconnect device, the disconnect device shall remain readily operable.
18. WARNING: To reduce the risk of fire or electric shock, do not expose this apparatus to rain or moisture. The apparatus shall not be exposed to dripping or splashing and that no objects filled with liquids, such as vases, shall not be placed on apparatus.
19. The use of the equipment in moderate climate.
20. The ventilation should not be impeded by covering the ventilation openings with items, such as newspapers, table-cloths, curtains, etc.
21. No naked flame sources, such as lighted candles, should be placed on the apparatus.
22. The symbol with ∼ Indication AC voltage.
23. The symbol with ⎓ indicate DC voltage.
24. The batteries (battery pack or batteries installed) shall not be exposed to excessive heat such as sunshine, fire or the like.
25. Attention should be drawn to the environmental aspects of battery disposal.