Bluetooth Module Data Sheet

Document Type: SA-20

Document Version: V1.1

Release Date: November 12. 2021

Release Record

Version Number	Release Date	Comments
Revision 1.0	2021-02-25	First Release

1. INTRODUCTION

FSC-BT816S is a fully integrated Bluetooth module that complies with Bluetooth 4.2 dual mode protocols(BR/EDR/LE). It provides several interfaces such as UART, I^2C, PCM, AIO, PIO, etc,which can customized different applications.

FSC-BT816S supports various profiles. It integrates MCU, Baseband controller, RF, etc. in a small package, so the designers can have better flexibilities for the product shapes.

FSC-BT816S can be controlled by UART port or other interfaces. Please refer to Feasycom software design guide for the interfacing protocol.

1.1 Block Diagram

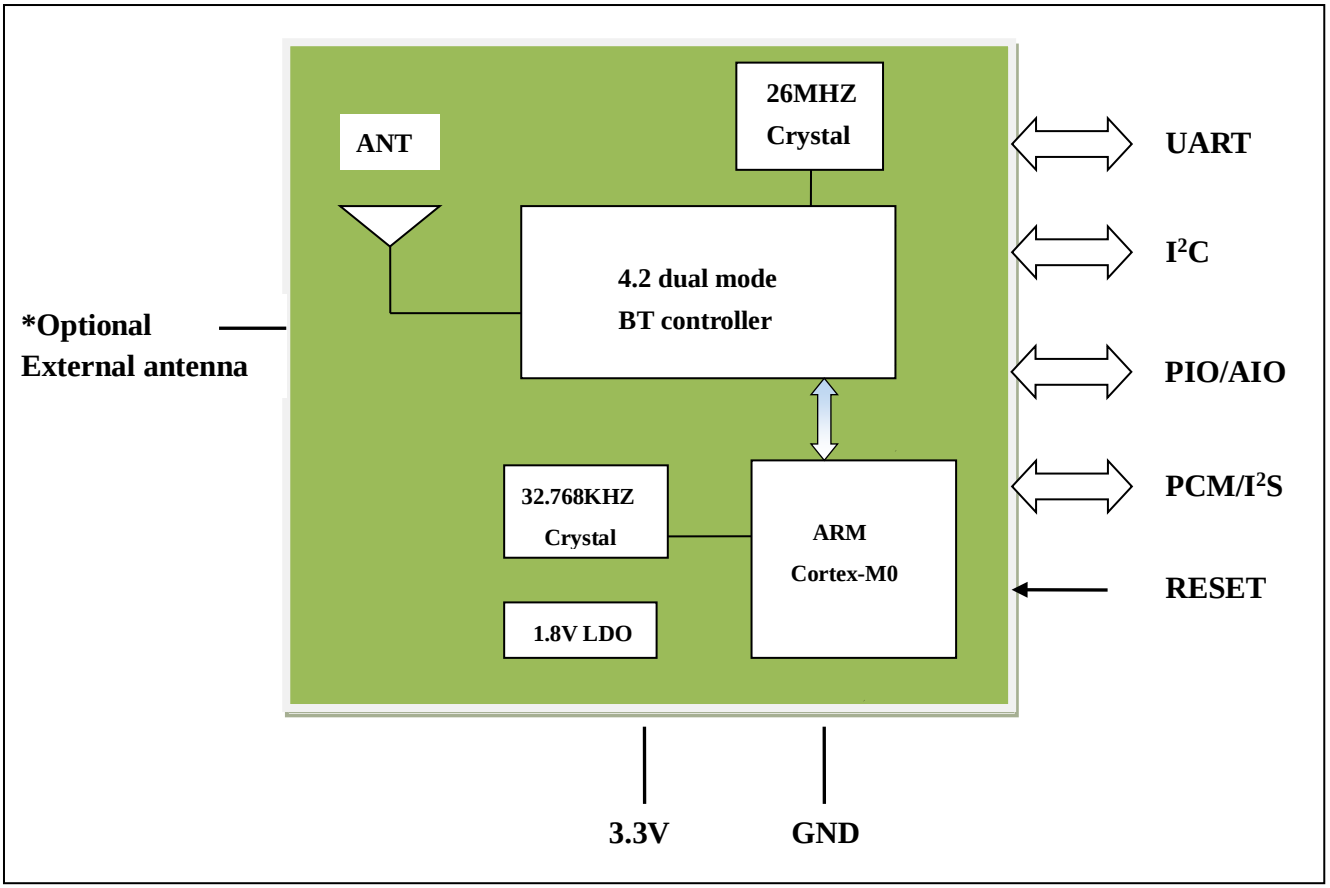

Figure 1

1.2 Feature

- Fully qualified Bluetooth 4.2/3.0/2.1/2.0/1.2/1.1
- Postage stamp sized form factor.
- Low power.
- Class 1.5 support(high output power).
- The default UART Baud rate is 115.2Kbps and can support from 1200bps up to 921Kbps,.
- UART, I^2C , PCM/I^2S data connection interfaces.
- Embedded Bluetooth stack profiles support(requires no host stack): SPP, HID, and all LE protocols.

1.3 Application

- Smart Watch and Bluetooth Bracelet
- Health & Medical devices
- Measurement and monitoring systems
- Industrial sensors and controls
- Asset tracking

1.4 Module picture as below showing

Figure 2

2. GENERAL SPECIFICATION

General Specification	
Chipset	CC2564C
Product ID	SMQSA-20
Dimension	13mm(W) x 26.9mm(L) x 2.0mm(H) (Tolerance: ±0.2mm)
Bluetooth Specification	Bluetooth V4.2 (Dual Mode)
Power Supply	3.3 Volt DC
Output Power	5.06 dBm
Sensitivity	-90dBm@0.1%BER
Frequency Band	2.402GHz -2.480GHz ISM band
Modulation	FHSS,GFSK,DPSK,DQPSK
Baseband Crystal OSC	26MHz
Hopping & channels	1600hops/sec, 1MHz channel space,79 Channels(BT 4.2 to 2MHz channel space)
RF Input Impedance	50 ohms
Antenna	PCB antenna
Interface	Data: UART (Standard), I^2C Audio: PCM/I^2S Others: PIO, AIO, Touch sensor, PWM.
Profile	SPP, GATT(BLE Standard) MFI, Airsync, ANCS, iBeacon, HID
Temperature	-40ºC to +85ºC
Humidity	10%~95% Non-Condensing
Environmental	RoHS Compliant
MSL grade:	MSL 3
ESD grade	Human Body Model: Class-2 Machine Model: Class-B

Table 1

3. PHYSICAL CHARACTERISTIC

- Dimension: 13mm(W) x 26.9mm(L) x 2.0mm(H) Tolerance: ±0.2mm
- Module size: 13mm X 26.9mm Tolerance: ±0.2mm
- Pad size: 1mmX0.8mm Tolerance: ±0.2mm
- Pad pitch: 1.5mm Tolerance: ±0.1mm

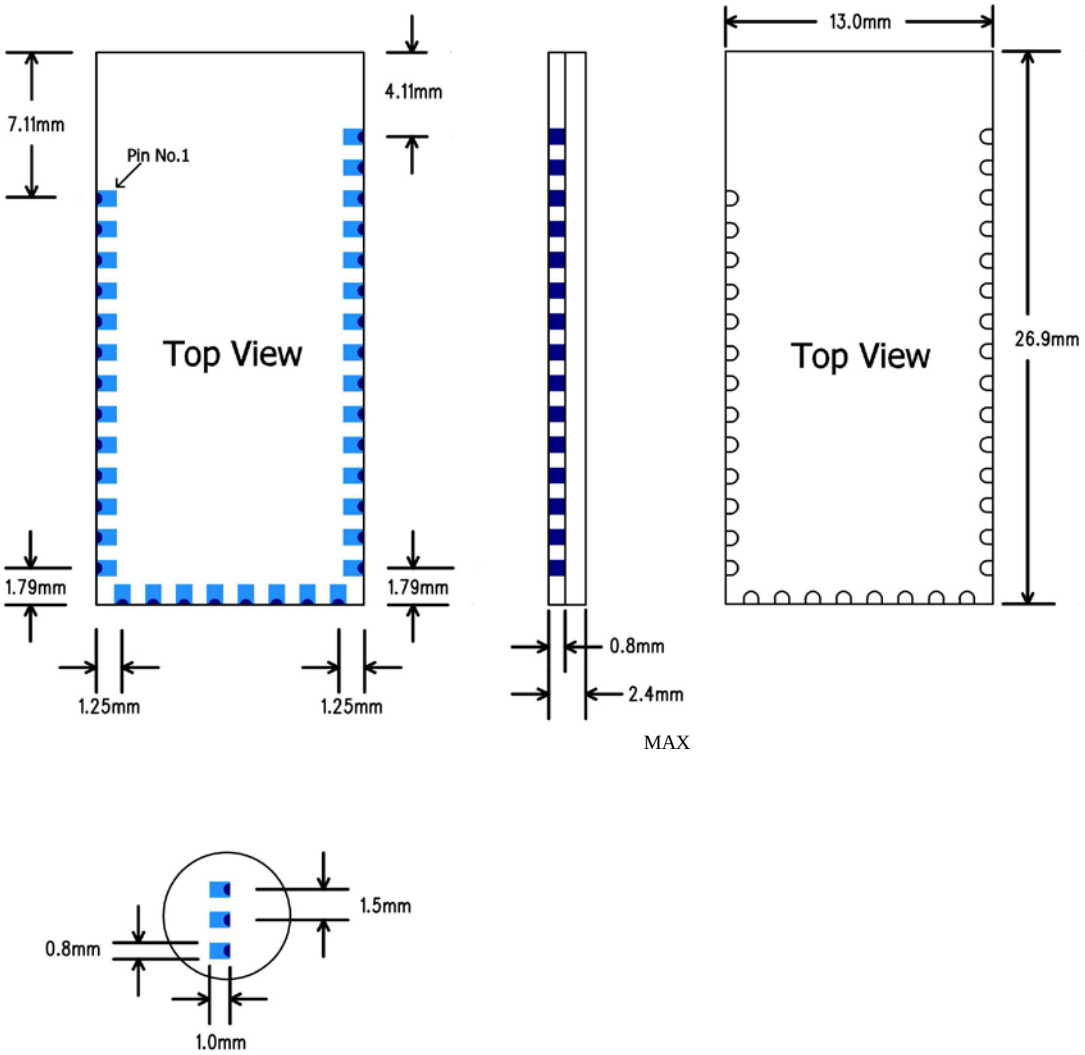

Figure 3

4. PIN DEFINITION DESCRIPTIONS

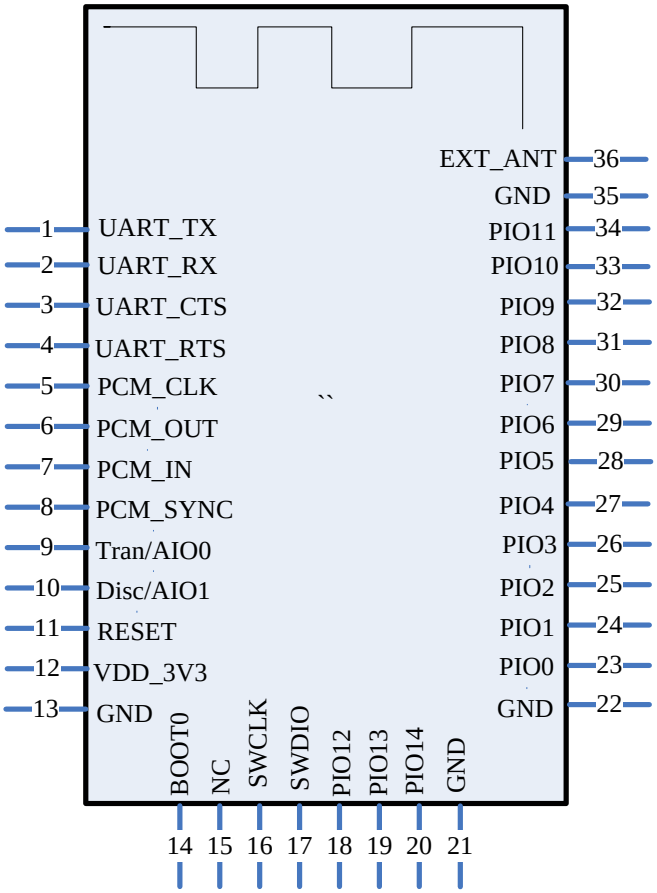

Figure 4: FSC-BT816S PIN Diagram

Pin NO.	Pin Name	Type	Pin Descriptions
1	UART_TX	CMOS output	UART data output
2	UART_RX	CMOS input	UART data input
3	UART_CTS	CMOS input	UART clear to send active low Alternative Function: Programmable input/output line
4	UART_RTS	CMOS output	UART request to send active low Alternative Function: Programmable input/output line
5	PCM_CLK	Bi-directional	Synchronous data clock(**Operating voltage level: 1.8V**)
6	PCM_OUT	CMOS output	Synchronous data output(**Operating voltage level: 1.8V**)
7	PCM_IN	CMOS input	Synchronous data input(**Operating voltage level: 1.8V**)
8	PCM_SYNC	Bi-directional	Synchronous data sync(**Operating voltage level: 1.8V**)

9	Tran/AIO0	I/O	Alternative Function 1: Analogue programmable I/O line. Alternative Function 2: Host MCU change UART transmission mode. ***When bluetooth connection established,*** ***H = instruction mode*** ***L = throughput mode***
10	Disc/AIO1	I/O	Alternative Function 1: Analogue programmable I/O line. Alternative Function 2: Host MCU disconnect bluetooth. ***When bluetooth connection established, a rising edge of the PIN will cause disconnection with remote device.***
11	RESET	CMOS input	Reset if low. Input debounced so must be low for >5ms to cause a reset.
12	VDD_3V3	VDD	Power supply voltage 3.3V
13	GND	VSS	Power Ground
14	BOOT0	CMOS input	The default is low. (internal 10K resistance drop) When writing to MCU when using the serial port, this pin is connected with the high level.
15	PIO15	Bi-directional	Programmable input/output line
16	SWCLK	Bi-directional	Debugging through the clk line(Default)
17	SWDIO	Bi-directional	Debugging through the data line(Default)
18	PIO12	Bi-directional	Programmable input/output line ***Alternative Function: UART3 data output***
19	PIO13	Bi-directional	Programmable input/output line ***Alternative Function: UART3 data input***
20	PIO14	Bi-directional	Programmable input/output line
21	GND	VSS	Power Ground
22	GND	VSS	Power Ground
23	PIO0	Bi-directional	Programmable input/output line
24	PIO1	Bi-directional	Programmable input/output line
25	PIO2	Bi-directional	Programmable input/output line
26	PIO3	Bi-directional	Programmable input/output line
27	PIO4	Bi-directional	Programmable input/output line

			Alternative Function: BT Power Mode, low level in run mode, it will be set to high level when fall asleep.
28	PIO5	Bi-directional	Programmable input/output line
29	PIO6	Bi-directional	Programmable input/output line Alternative Function: I^2C Serial Clock input/output
30	PIO7	Bi-directional	Programmable input/output line Alternative Function:I^2C Serial Data input/output
31	PIO8	Bi-directional	Programmable input/output line
32	PIO9	Bi-directional	Programmable input/output line Alternative Function: LED(Default)
33	PIO10	Bi-directional	Programmable input/output line Alternative Function: BT Status(Default)
34	PIO11	Bi-directional	Programmable input/output line
35	GND	VSS	Power Ground
36	EXT_ANT	RF signal output	By default, this PIN is an empty feet. This PIN can connect to an external antenna to improve the Bluetooth signal coverage. If you need to use an external antenna, by modifying the module on the 0R resistance to block out the on-board antenna; Or contact Feasycom for modification.

Table 2

5. Interface Characteristics

5.1 UART Interface

Four signals are used to implement the UART function. When FSC-BT816S is connected to another digital device, UART_RX and UART_TX transfer data between the two devices. The remaining two signals, UART_CTS and UART_RTS, can be used to implement RS232 hardware flow control where both are active low indicators.

The interface consists of four-line connection as described in below:

Signal name	Driving source	Description
UART-TX	FSC-BT816S module	Data from FSC-BT816S module
UART-RX	Host	Data from Host
UART-RTS	FSC-BT816S module	Request to send output of FSC-BT816S module
UART-CTS	Host	Clear to send input of FSC-BT816S module

Table 3

Possible UART Settings

Property	Possible Values
BCSP-Specific Hardware	Enable or Disable
Baud Rate	1200bps to 921Kbps
Flow Control	RTS/CTS or None
Data bit length	8bits
Parity	None, Odd or Even
Number of Stop Bits	1 or 2

Table 4

Default Data Format

Property	Possible Values
Baud Rate	115.2Kbps
Flow Control	None
Data bit length	8bit
Parity	None
Number of Stop Bits	1

Table 5

5.2 PCM CODEC Interface

The PCM signal level 1.8V.

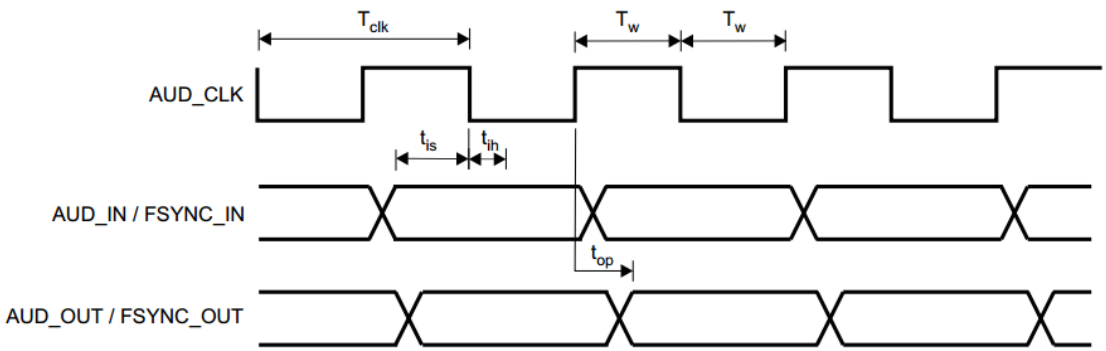

Figure 5： PCM Interface Timing

5.2.1 PCM Master

Symbol	Parameter	Condition	Min	Max	Unit
Tclk	Cycle time		244.14 (4.296MHZ)	15625(64kHZ)	ns
Tw	High or low pulse width		50% of Tclk min		
Tis	PCM-IN setup time		25		
Tih	PCM-IN hold time		0		
Top	PCM-OUT propagation time	40pF load	0	10	
Top	PCM-SYNC propagation time	40pF load	0	10	

Table 6

5.2.2 PCM Slave

Symbol	Parameter	Condition	Min	Max	Unit
Tclk	Cycle time		62.67(15MHZ)		ns
Tw	High or low pulse width		40% of Tclk		
Tis	PCM-IN setup time		8		
Tih	PCM-IN hold time		0		
tis	PCM-SYNC setup time		8		
tih	PCM-SYNC hold time		0		
Top	PCM-OUT propagation time	40pF load	0	21	

Table 7

5.3 AIO , PIO lines and I^2C

Up to 19 programmable bidirectional input/output (I/O) can be used.
Two general purpose analogue interface pin can be used.
PIO6 and PIO7 can be used as I^2C interface.

Inter-Integrated Circuit Interface (I^2C)

The I^2C module provides an interface between the MCU and a serial I^2C-bus. It is capable of acting as both a master and a slave, and supports multi-master buses. Both standard-mode, fast-mode and fast-mode plus speeds are supported, allowing transmission rates all the way from 10 kbit/s up to 1 Mbit/s. Slave arbitration and timeouts are also provided to allow implementation of an SMBus compliant system. The interface provided to software by the I^2C module, allows both fine-grained control of the transmission process and close to automatic transfers. Automatic recognition of slave addresses is provided in all energy modes.

Analog to Digital Converter (ADC)

The ADC is a Successive Approximation Register (SAR) architecture, with a resolution of up to 12 bits at up to one million samples per second. The integrated input max can select inputs from 4 external pins and 6 internal signals.

6. RECOMMENDED TEMPERATURE REFLOW PROFILE

Prior to any reflow, it is important to ensure the modules were packaged to prevent moisture absorption. New packages contain desiccate (to absorb moisture) and a humidity indicator card to display the level maintained during storage and shipment. If directed to bake units on the card, please check the below **Table 8** and follow instructions specified by IPC/JEDEC J-STD-033.

Note: The shipping tray cannot be heated above 65°C. If baking is required at the higher temperatures displayed in the below **Table 8**, the modules must be removed from the shipping tray.

Any modules not manufactured before exceeding their floor life should be re-packaged with fresh desiccate and a new humidity indicator card. Floor life for MSL (Moisture Sensitivity Level) 3 devices is 168 hours in ambient environment 30°C/60%RH.

Table 8: Recommended baking times and temperatures

MSL	125°C Baking Temp.		90°C/≤ 5%RH Baking Temp.		40°C/ ≤ 5%RH Baking Temp.	
	Saturated @ 30°C/85%	Floor Life Limit + 72 hours @ 30°C/60%	Saturated @ 30°C/85%	Floor Life Limit + 72 hours @ 30°C/60%	Saturated @ 30°C/85%	Floor Life Limit + 72 hours @ 30°C/60%
3	9 hours	7 hours	33 hours	23 hours	13 days	9 days

Feasycom surface mount modules are designed to be easily manufactured, including reflow soldering to a PCB. Ultimately it is the responsibility of the customer to choose the appropriate solder paste and to ensure oven temperatures during reflow meet the requirements of the solder paste. Feasycom surface mount modules conform to J-STD-020D1 standards for reflow temperatures.

The soldering profile depends on various parameters necessitating a set up for each application. The data here is given only for guidance on solder reflow.

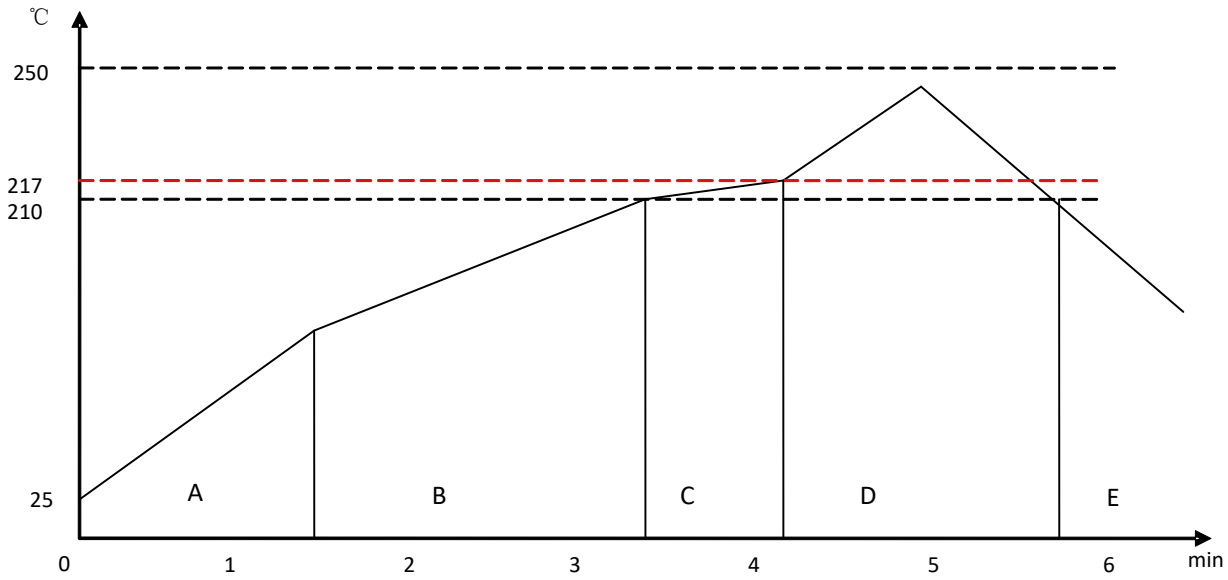

Figure 6: Typical Lead-free Re-flow

Pre-heat zone (A) — This zone raises the temperature at a controlled rate, **typically 0.5 – 2 °C/s**. The purpose of this zone is to preheat the PCB board and components to 120 ~ 150 °C. This stage is required to distribute the heat uniformly to the PCB board and completely remove solvent to reduce the heat shock to components.

Equilibrium Zone 1 (B) — In this stage the flux becomes soft and uniformly encapsulates solder particles and spread over PCB board, preventing them from being re-oxidized. Also with elevation of temperature and liquefaction of flux, each activator and rosin get activated and start eliminating oxide film formed on the surface of each solder particle and PCB board. **The temperature is recommended to be 150° to 210° for 60 to 120 second for this zone.**

Equilibrium Zone 2 (C) (optional) — In order to resolve the upright component issue, it is recommended to keep the temperature in 210 – 217 ° for about 20 to 30 second.

Reflow Zone (D) — The profile in the figure is designed for Sn/Ag3.0/Cu0.5. It can be a reference for other lead-free solder. The peak temperature should be high enough to achieve good wetting but not so high as to cause component discoloration or damage. Excessive soldering time can lead to intermetallic growth which can result in a brittle joint. The recommended peak temperature (Tp) is 230 ~ 250 °C. The soldering time should be 30 to 90 second when the temperature is above 217 °C.

Cooling Zone (E) — The cooling ate should be fast, to keep the solder grains small which will give a longer-lasting joint. **Typical cooling rate should be 4 °C.**

7. Reliability and Environmental Specification

7.1 Temperature test

Put the module in demo board which uses exit power supply, power on the module and connect to mobile. Then put the demo in the －40℃ space for 1 hour and then move to +85℃ space within 1minute, after 1 hour move back to －40℃ space within1 minute. This is 1 cycle. The cycles are 32 times and the units have to pass the testing.

7.2 Vibration Test

The module is being tested without package. The displacement requests 1.5mm and sample is vibrated in three directions(X,Y,Z).Vibration frequency set as 0.5G , a sweep rate of 0.1 octave/min from 5Hz to 100Hz last for 90 minutes each direction. Vibration frequency set as 1.5G, a sweep rate of 0.25 octave/min from 100Hz to 500Hz last for 20 minutes each direction.

7.3 Desquamation test

Use clamp to fix the module, measure the pull of the component in the module, make sure the module`s soldering is good.

7.4 Drop test

Free fall the module (condition built in a wrapper which can defend ESD) from 150cm height to cement ground, each side twice, total twelve times. The appearance will not be damaged and all functions OK.

7.5 Packaging information

After unpacking, the module should be stored in environment as follows:

Temperature: 25℃ ± 2℃

Humidity: <60%

No acidity, sulfur or chlorine environment

The module must be used in four days after unpacking.

8. Layout and Soldering Considerations

8.1 Soldering Recommendations

FSC-BT816S is compatible with industrial standard reflow profile for Pb-free solders. The reflow profile used is dependent on the thermal mass of the entire populated PCB, heat transfer efficiency of the oven and particular type of solder paste used. Consult the datasheet of particular solder paste for profile configurations.

Feasycom will give following recommendations for soldering the module to ensure reliable solder joint and operation of the module after soldering. Since the profile used is process and layout dependent, the optimum profile should be studied case by case. Thus following recommendation should be taken as a starting point guide.

8.2 Layout Guidelines

It is strongly recommended to use good layout practices to ensure proper operation of the module. Placing copper or any metal near antenna deteriorates its operation by having effect on the matching properties. Metal shield around the antenna will prevent the radiation and thus metal case should not be used with the module. Use grounding vias separated max 3 mm apart at the edge of grounding areas to prevent RF penetrating inside the PCB and causing an unintentional resonator. Use GND vias all around the PCB edges.

The mother board should have no bare conductors or vias in this restricted area, because it is not covered by stop mask print. Also no copper (planes, traces or vias) are allowed in this area, because of mismatching the on-board antenna.

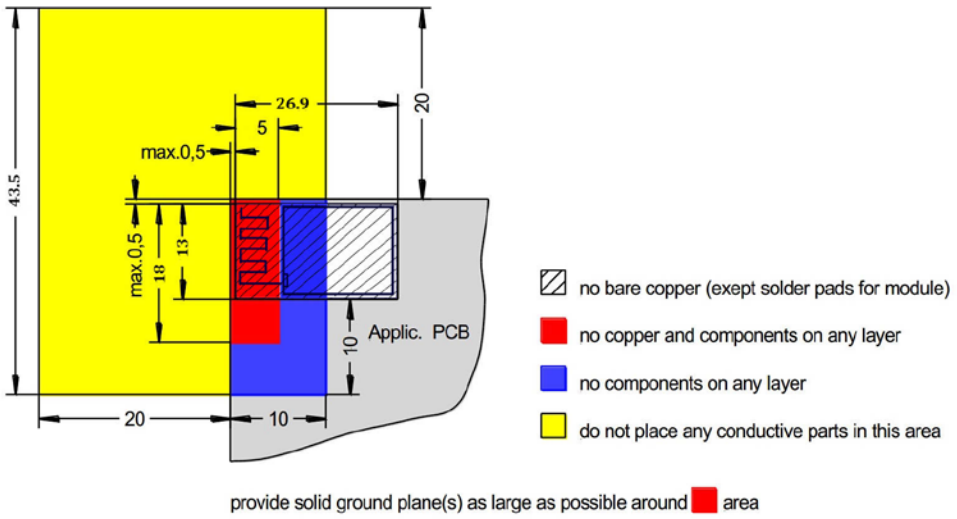

Figure 7: FSC-BT816S Restricted Area

Following recommendations helps to avoid EMC problems arising in the design. Note that each design is unique and the following list do not consider all basic design rules such as avoiding capacitive coupling between signal lines. Following list is aimed to avoid EMC

problems caused by RF part of the module. Use good consideration to avoid problems arising from digital signals in the design.

Ensure that signal lines have return paths as short as possible. For example if a signal goes to an inner layer through a via, always use ground vias around it. Locate them tightly and symmetrically around the signal vias. Routing of any sensitive signals should be done in the inner layers of the PCB. Sensitive traces should have a ground area above and under the line. If this is not possible, make sure that the return path is short by other means (for example using a ground line next to the signal line).

9. Product Packaging Information

9.1 Packing

a, Tray vacuum

b, Tray Dimension: 180mm * 195mm

Figure 8,9,10: Product Packaging Information (Tray)

9.2 Packing box(Optional)

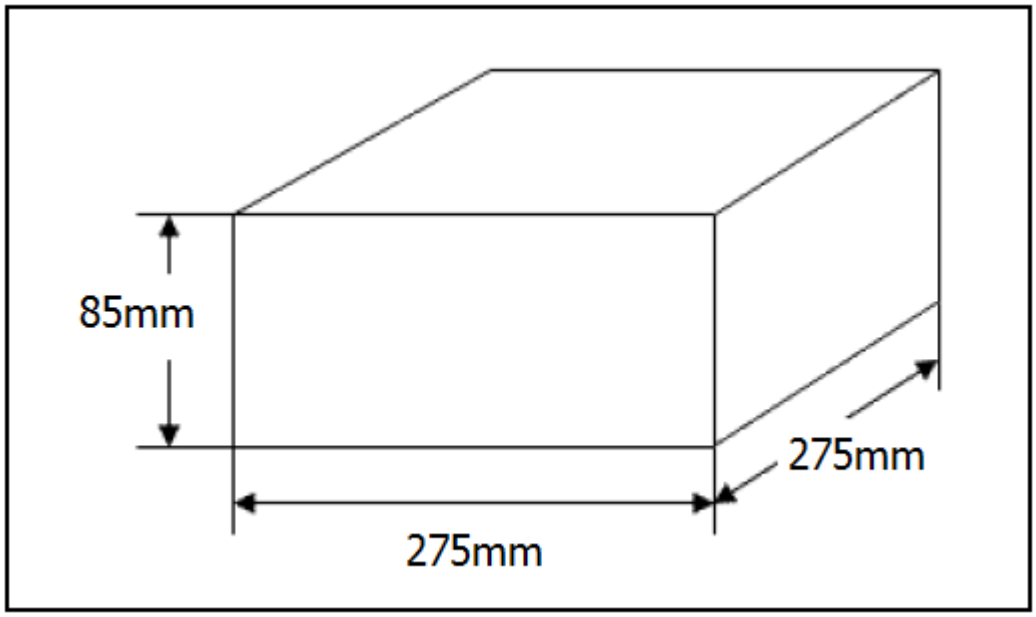

* If require any other packing, must be confirmed with customer

Figure 11: Packing Box

Integration instructions for host product manufacturers according to KDB 996369 D03 OEM Manual v01

2.2 List of applicable FCC rules

FCC Part 15 Subpart C 15.247 & 15.209 .

2.3 Specific operational use conditions

The module can be used for mobile applications with a maximum 2dBi antenna.
The host manufacturer installing this module into their product must ensure that the final compos it product complies with the FCC requirements by a technical assessment or evaluation to the FCC rules, including the transmitter operation.
The host manufacturer has to be aware not to provide information to the end user regarding how to install or remove this RF module in the user's manual of the end product which integrates this module. The end user manual shall include all required regulatory information/warning as show in this manual.

2.4 Limited module procedures

This module is Limited single modular without shielding, host manufacturer have to consult with module manufacturer for the module limiting conditions when integrate the module in the host. module manufacturer should reviews detailed test data or host designs prior to giving the host manufacturer approval.

2.5 Trace antenna designs

Not applicable. The module has its own antenna, and doesn.t need a host. sprinted board microstrip trace antenna etc.

2.6 RF exposure considerations

This equipment complies with FCC radiation exposure limits set forth for an uncontrolled environment. If RF exposure statement or module layout is changed, then the host product manufacturer required to take responsibility of the module through a change in FCC ID or new application. The FCC ID of the module cannot be used on the final product. In these circumstances, the host manufacturer will be responsible for re-evaluating the end product (including the transmitter) and obtaining a separate FCC authorization.

2.7 Antennas

Antenna Specification are as follows:
Type: PCB Antenna
Gain: 2dBi Max.
This device is intended only for host manufacturers under the following conditions:
The transmitter module may not be co-located with any other transmitter or antenna;
The module shall be only used with the internal antenna(s) that has been originally tested and certified with this module. The antenna must be either permanently attached or employ a ?unique? antenna coupler.
As long as the conditions above are met, further transmitter test will not be required. However, the host manufacturer is still responsible for testing their end-product for any additional compliance requirements required with this module installed (for example, digital device emissions, PC peripheral requirements, etc.).

2.8 Label and compliance information

Host product manufacturers need to provide a physical or e-label stating “Contains FCC ID: SMQ-SA20” with their finished product

2.9 Information on test modes and additional testing requirements

Host manufacturer must perform test of radiated & conducted emission and spurious emission, e.t.c according to the actual test modes for a stand-alone modular transmitter in a host, as well as for multiple simultaneously transmitting modules or other transmitters in a host product.
Only when all the test results of test modes comply with FCC requirements, then the end product can be sold legally.

2.10 Additional testing, Part 15 Subpart B disclaimer

The modular transmitter is only FCC authorized for FCC Part 15 Subpart C 15.247 & 15.209 and that the host product manufacturer is responsible for compliance to any other FCC rules that apply to the host not covered by the modular transmitter grant of certification. If the grantee markets their product as being Part 15 Subpart B compliant (when it also contains unintentional-radiator digital circuity), then the grantee shall provide a notice stating that the final host product still requires Part 15 Subpart B compliance testing with the modular transmitter installed.

Federal Communication Commission Statement (FCC, U.S.)

This equipment has been tested and found to comply with the limits for a Class B digital device, pursuant to Part 15 of the FCC Rules. These limits are designed to provide reasonable protection against harmful interference in a residential installation. This equipment generates, uses and can radiate radio frequency energy and, if not installed and used in accordance with the instructions, may cause harmful interference to radio communications. However, there is no guarantee that interference will not occur in a particular installation. If this equipment does cause harmful interference to radio or television reception, which can be determined by turning the equipment off and on, the user is encouraged to try to correct the interference by one of the following measures:

- Reorient or relocate the receiving antenna.
- Increase the separation between the equipment and receiver.
- Connect the equipment into an outlet on a circuit different from that to which the receiver is connected.
- Consult the dealer or an experienced radio/TV technician for help.

This device complies with Part 15 of the FCC Rules. Operation is subject to the following two conditions: (1) This device may not cause harmful interference, and (2) this device must accept any interference received, including interference that may cause undesired operation.

FCC Caution:

Any changes or modifications not expressly approved by the party responsible for compliance could void the user's authority to operate this equipment.

IMPORTANT NOTES

Co-location warning:

This transmitter must not be co-located or operating in conjunction with any other antenna or transmitter.

Validity of using the module certification:
In the event that these conditions cannot be met (for example certain laptop configurations or co-location with another transmitter), then the FCC authorization for this module in combination with the host equipment is no longer considered valid and the FCC ID of the module cannot be used on the final product. In these circumstances, the OEM integrator will be responsible for re-evaluating the end product (including the transmitter) and obtaining a separate FCC authorization.
End product labeling:
The final end product must be labeled in a visible area with the following: “Contains Transmitter Module FCC ID: SMQSA-20”.
Information that must be placed in the end user manual:
The OEM integrator has to be aware not to provide information to the end user regarding how to install or remove this RF module in the user's manual of the end product which integrates this module. The end user manual shall include all required regulatory information/warning as show in this manual.