MATX

Tire Monitor

OWNER's MANUAL

TABLE OF CONTENT

Notices - ii

1. Objectives - 01

2. Descriptions - 02 - 03

3. Normal Operations - 04

Automatic and Manual Scroll

Pressure or Temperature Display

Power saver Mode

4. Alerts - 05

5. Others - 06 - 07

Switching off Display Module

Low Battery Warning

Changing Tire Position

Tire Replacement

Wheel Rim Replacement

Sensor Module Replacement

6. Installation - 08 - 13

Install Sensor Modules

Configure Display Module

Install Display Module

De-installation of Tire

7. Programming - 14 - 19

8. Troubleshooting - 20 - 21

9. Technical Specifications - 22

Record of Sensor Module Position - Back Cover

● System Usage

MATX TIRE MONITOR is a safety device that issues audio and visual alerts to users upon predefined tire conditions. It is the user's responsibility to react promptly and appropriately to alerts, and to rectify the conditions as soon as possible.

MATX TIRE MONITOR is suitable for use in passenger cars and light trucks with not more than 5 radial (tubeless) tires. For vehicles with more tires, use ***MATX TIRE MONITOR*** for trucks and buses. This system will not function in bias tires.

● System Installation

Use of ***MATX TIRE MONITOR*** requires that it has been properly installed and programmed by qualified personnel according to ***MATX TIRE MONITOR'S*** documentation. This includes the Owner's Manual, any supplementary instructions included with the product, and any installation guide issued to dealers or installers.

● Reacting to Alerts

When an alert is shown, reduce vehicle speed to an appropriate safe level and proceed to a safe stopping location where tires can be inspected.

Low pressure alerts indicate tire inflation is needed at the soonest opportunity. Rapid deflation alert is normally triggered by a puncture and therefore, the wheel needs to be replaced before continuing the journey. High pressure alert implies that tire needs to be deflated and re-inflated to the optimum pressure. High temperature alert may be caused by severe under inflation, hard sustained braking, vehicle overload and sustained high speeds, and need to be rectified accordingly.

● Use of Chemicals

Temporary resealing or re-inflation products that require addition of sealant or propellant chemicals inside any tire may adversely affect the operation of the sensor module.

● Power Consumption

If a display module is connected in such a way that it is always on (e.g. via cigarette lighter power socket that is always 'live' or hardwiring before the ignition switch), it is advisable to switch it off before extended period of parking (more than three days), in order to avoid battery draining.

DISCLAIMER

A properly installed, programmed and functioning ***MATX TIRE MONITOR*** is capable of alerting the user on pre-determined low and high tire inflation pressure, and high tire internal temperature conditions. It is the user's responsibility to react promptly and appropriately to alerts, and to rectify the conditions as soon as possible. TS Matrix Auto Sdn. Bhd., and its holding companies are not responsible for any loss of life, physical and psychological injuries, as well as property damages due to improper installation or inappropriate use of ***MATX TIRE MONITOR***, or failure to response promptly to alerts issued by ***MATX TIRE MONITOR***.

1. OBJECTIVES

MATX TIRE MONITOR continuously measures inflation pressure and internal temperature of individual tires. It displays the measurement data and issues audio and visual alerts during any of the following conditions:

- ***Pressure of any tire is lower than an user-determined level***
- ***Pressure of any tire is lower than the recommended safety level***
- ***Pressure of any tire is higher than the recommended safety level***
- ***Internal temperature of any tire is higher than the recommended safety level***
- ***Pressure of any tire is decreasing rapidly (e.g. when tire is punctured)***

Upon detection of any alert, users are advised to slow down immediately and gently bring the vehicle to a stop at a safe location to inspect the tires. It is the users' responsibility to react promptly and to rectify the situation as soon as possible.

2. DESCRIPTIONS

A ***MATX TIRE MONITOR*** consists of 2 principal parts - sensor modules and display module.

A sensor module is to be mounted on each wheel rim using metal strap provided. Each sensor module measures temperature and pressure inside the tire, processes measurement data, and wirelessly transmits signals to the display module. Sensor modules are powered by built-in battery with minimum life of 5 years or 100,000 km (60,000 miles). Optional sensor modules can be purchased separately to monitor spare tire or to replace existing parts. Each sensor module is uniquely coded.

A display module is to be installed inside the vehicle cabin using sticky tape provided. It receives wireless signals from dedicated sensor modules, display the information and show audio and visual alerts at user-determined and pre-programmed levels. Display module can be plugged into the vehicle's cigarette lighter power outlet or hardwired into vehicle's main power circuitry.

Complete System

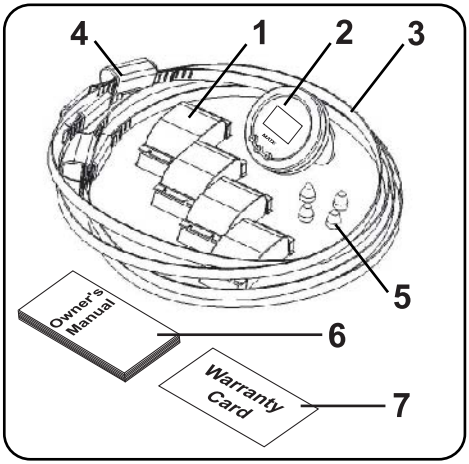

1. Sensor Modules
2. Display Module
3. Metal Strap
4. Fastener
5. Valve Cap
6. Owner's Manual
7. Warranty Card

Sensor Module

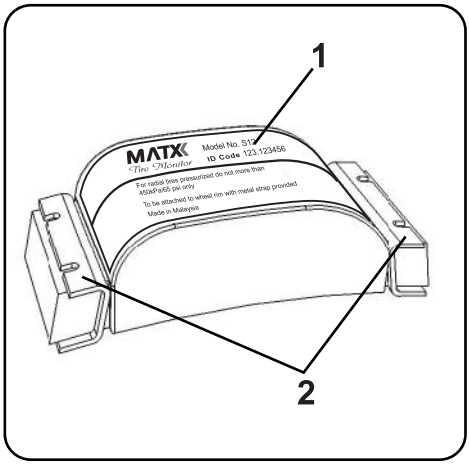

1. Unique Identity Code
2. Loops for Metal Straps

2. DESCRIPTIONS

Display Module

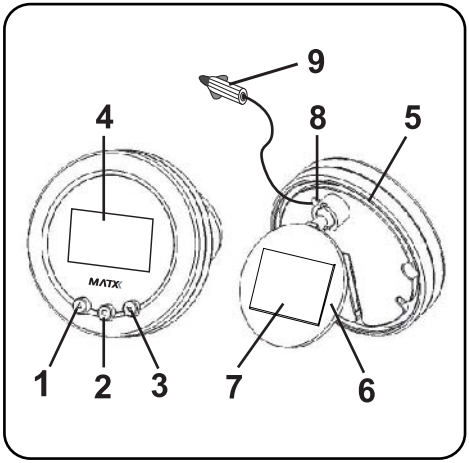

Screen Display

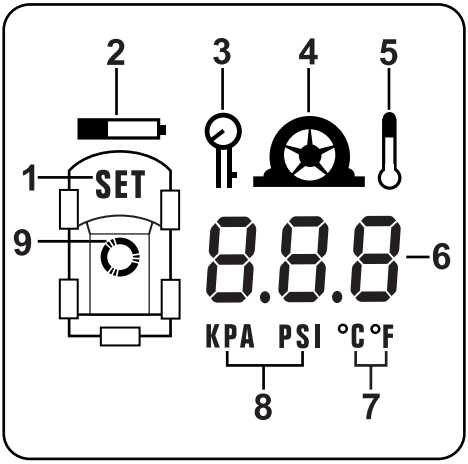

1. 'Up' button
2. 'Mode' button
3. 'Down' button
4. Screen
5. Antenna
6. Holder
7. Sticky tape
8. Power cord
9. Power plug

1. Programming Mode
2. Low battery alert
3. Pressure data indicator
4. Low pressure alert
5. Temperature data indicator
6. Pressure or temperature reading
7. Temperature units
8. Pressure units
9. Automatic scroll

3. NORMAL OPERATIONS

● *Automatic and Manual Scroll*

During normal operations, a display module shows pressure or temperature data for one tire at a time. The display will automatically scroll on to show the reading of the next tire after 3 seconds. The user may press 'Up' or 'Down' button to manually select any tire for data display.

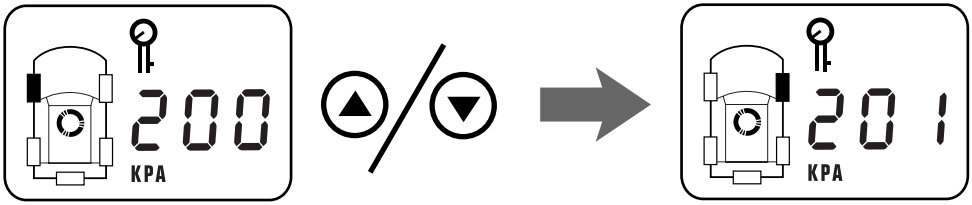

● *Pressure or Temperature Display*

To toggle between pressure and temperature display, press 'Mode' button once. Pressure data displayed is compensated for temperature variation during operation of vehicle.

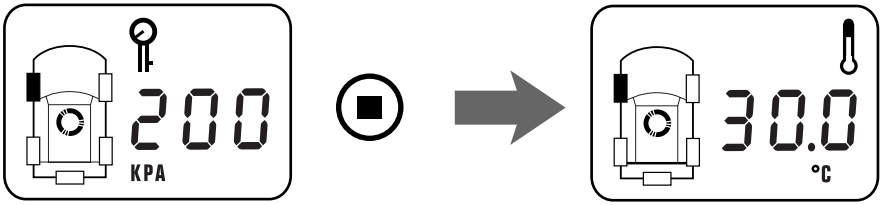

● *Power Saver Mode*

When the vehicle is stationary, sensor modules enter a power saver mode that temporarily stops the transmission of data. The transmission will resume to normal interval as soon as the vehicle is in motion.

4. ALERTS

MATX TIRE MONITOR is capable of showing 5 types of alert:

Audio	*Visual*	*Reason*
Short single beep	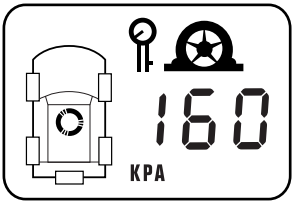	Pressure falls below the user-determined 1st warning level.
Double beep	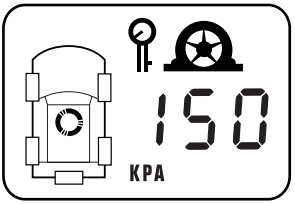	Pressure falls below the system-calculated 2nd warning level.
Short single beep followed by double deep.	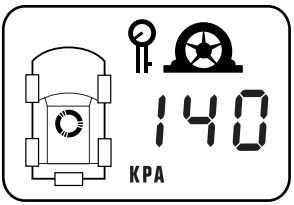	Pressure decreases rapidly.
Double beep	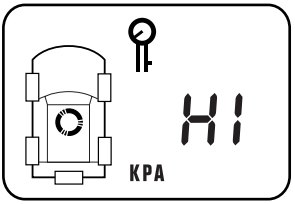	Pressure exceeds the system-calculated safe level.
Continuous beep	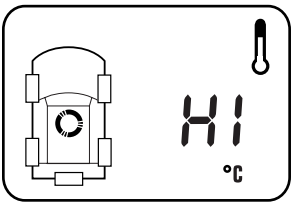	Tire internal temperature exceeds the system-calculated safe level.

Audio alert can be switched off by pressing any button. Visual alert will only be deactivated when the situation is rectified.

During alert, data is transmitted at a shorter interval, providing updated information about the situation and giving the driver ample time to response.

● *Switching Off Display Module*

For connection via some cigarette lighter power outlets or hardwiring through ignition switch, a display module will be switched off when the vehicle's engine is off.

Some cigarette lighter power outlets are always live, even when the engines are switched off. Similarly, a display module will be always on if it is hardwired before the ignition switch. In these cases, the display module needs to be switched off before an extended period of vehicle inactivity (e.g. parked for more than 3 days) to avoid battery draining.

A display module can be switched off by pressing 'Mode' for 3 seconds, and switched back on using any button.

NOTE: It is advisable to have the display module switched on at all time while driving in order to provide maximum protection to the users.

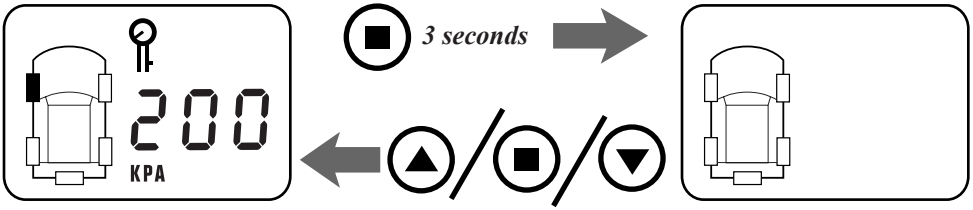

● *Low Battery Warning*

Display of low battery icon indicates low battery in one or more of the sensor modules. It is recommended that all sensor modules to be replaced if they were installed at the same time.

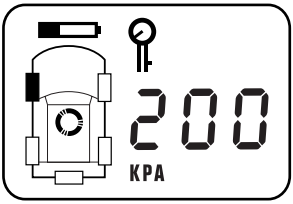

● *Changing Tire Position*

After changing tire position, a display module can be reprogrammed to show the new position of each tire. Color-coded valve caps are used to demarcate unique ID code of sensor module used in programming. Refer to Chapter 7 for step-by-step programming guide.

● *Tire Replacement*

A tire can be replaced without affecting the functionality of sensor module installed. Refer to Chapter 6 for a few considerations during tire replacement.

● *Wheel Rim Replacement*

A sensor module can be detached from the wheel rim by unfastening the metal strap. Thereafter, it can be reattached to a new wheel rim and remounted to the vehicle. The color-coded valve cap needs to be transferred to the new wheel rim to identify the sensor module. If the wheel is remounted to the same position, no reprogramming is necessary.

● *Sensor Module Replacement*

A sensor module can be replaced without re-installing the whole system. The last 2 digits of the ID code need to be different from other sensor modules installed. The new ID code needs to be programmed in. Refer to chapter 7 for step-by-step programming guide.

Install Sensor Modules

CAUTION: Installation of sensor modules must be performed by qualified personnel with skills and facilities capable of installing tires. This is to ensure functionality of the system as well as safety of the users.

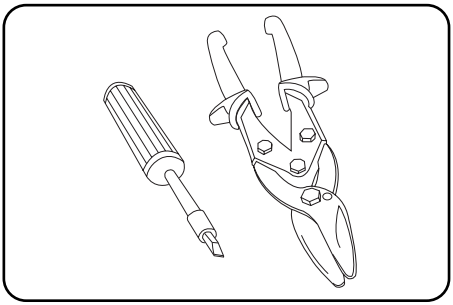

TOOLS REQUIRED
- Tire changing equipment
- Tire balancing equipment
- Screwdriver
- Metal cutter

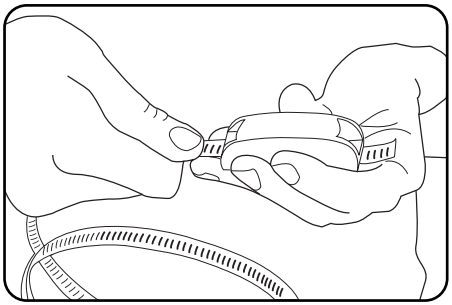

1. Slide a metal strap through the metal loops of sensor module.

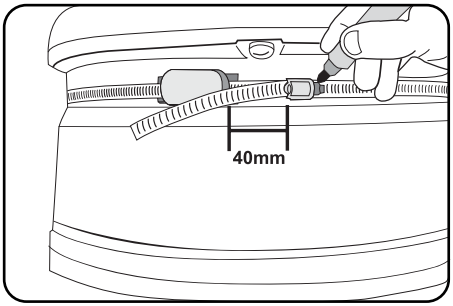

2. Wrap a metal strap with sensor module around the smallest circumference of a wheel rim. Estimate the length of metal strap required (include 40 mm or 1.5 inch extra length at the end).

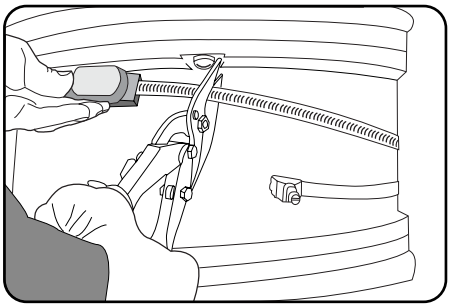

3. Cut and remove any excessive length of metal strap.

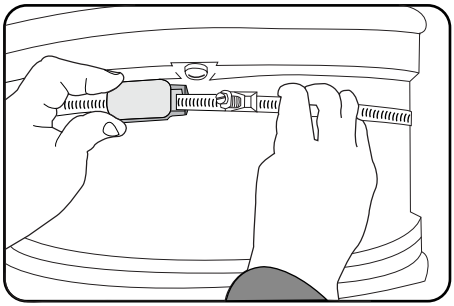

4. Guide the end of metal strap into the fastener. Position the sensor module near the valve.

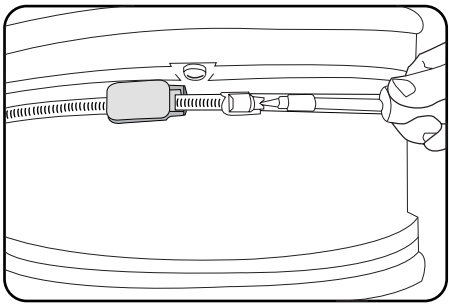

5. Tighten the fastener using a screwdriver. Ensure there is enough torque (4N-m or 30 inch pounds) to prevent the sensor module from slipping.

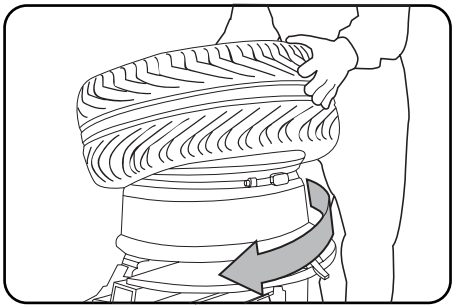

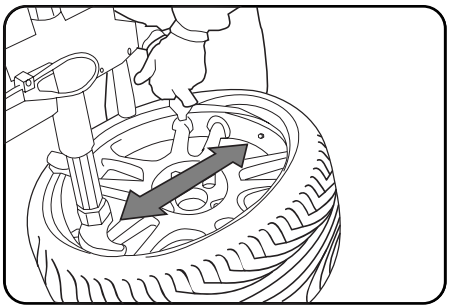

6. Affix the tire back onto the wheel rim by positioning the sensor module (indicated by the position of the valve) 180° away from the mount head. Ensure that the tire bead does not press against the sensor module during installation.

7. Inflate the tire. Put on a valve cap with the same colour as the label of sensor module. Perform a dynamic balancing test on the wheel. Use balancing weights to achieve balance if necessary.

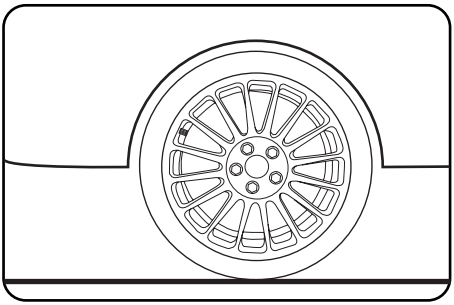

8. Mount the installed wheel back to the appropriate position. Record the code and the position in this manual. For new installation, the following factory default position may be used :

Front Left	-	Red
Front Right	-	Yellow
Rear Right	-	Green
Rear Left	-	Blue

9. Repeat step 1 to 8 for other wheels.

Configure Display Module

10. Plug the power plug into the cigarette lighter power outlet. Turn the vehicle ignition key to 'on' to power up the display module.

11. Enter programming mode by pressing 'Mode' button and 'Down' button together until the word 'SET' appear on the screen.

12. Refer to Chapter 7 for step-by-step guide to program the display module.

Install Display Module

13. Place the holder with display module at the appropriate location in your vehicle cabin. Secure with sticky tapes.
NOTE: Display module must be installed securely at a location such that it does not obstruct driver's view and is within the reach of driver but not in the path of airbag deployment.

14. Instead of using the provided cigarette lighter plug, the user may choose to hardwiring the display module into the vehicle's main power circuitry.
CAUTION: Hardwiring of display module must be performed by qualified personnel with skills and facilities capable of electrical installation for vehicles.

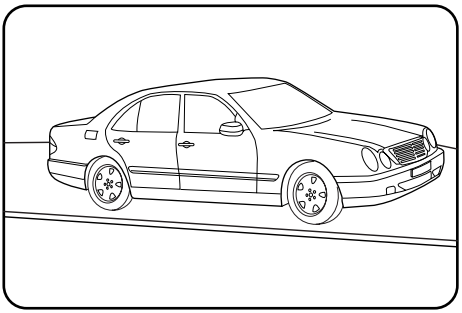

15. Drive the vehicle for several minutes to allow learning of ID codes into system memory and to initialize normal operation.

De-installation of Tire

A few steps of precaution need to be taken into consideration:

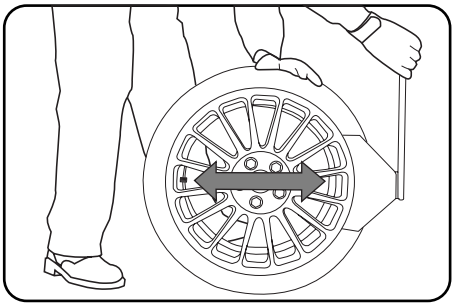

1. Insert the loosener shoe at a position 180° from the valve where sensor module is located.

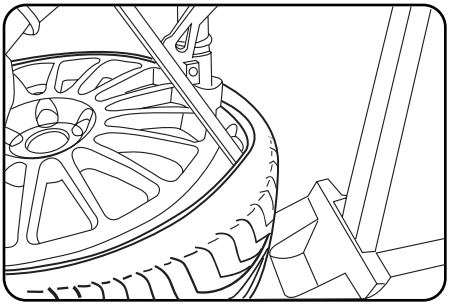

2. Insert the mount head and mounting bar at a position 180° from the valve where sensor module is located.

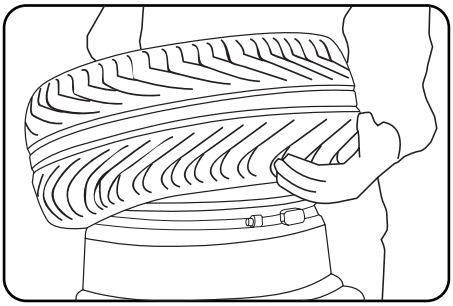

3. Verify the position of the sensor module before lifting the lower bead. Ensure that the tire bead does not press against the sensor module.

4. The sensor module should be checked for correct positioning and fit prior to tire replacement.

7. PROGRAMMING

MATX TIRE MONITOR is programmable to suit the specification of all vehicles and the preference of all users. It can be easily reprogrammed after each tire position change, or after addition or replacement of any sensor module.

Each sensor module is uniquely coded to identify position of tires and to prevent interference from other systems. The unique ID code can be found on the label of a sensor module. For future reference, DO NOT REMOVE THE LABEL. Color-coded valve caps are provided to distinguish between sensor modules installed. Users are advised to record the ID codes and their corresponding positions in this manual.

The last 2 digits of ID code are used for programming. These 2-digits need to be different for all sensor modules installed.

Optimum pressure should be programmed in according to vehicle manufacturer's recommendation. ***MATX TIRE MONITOR*** uses optimum pressure settings to decide the 2nd low pressure warning levels, the high-pressure limits and the high-temperature limit. As for the 1st low pressure warning levels, users may customize according to their preferences.

Programming procedures of MATX TIRE MONITOR are as followed:

1. Unit selection for pressure and temperature
2. Optimum pressure, followed by 1st warning pressure settings for front wheels, rear wheels and spare wheel
3. Code input (last 2 digits of sensor module's ID code) for front left position, front right position, rear right position, rear left position and spare wheel position
4. Initialization and learning of full unique ID codes

Step-by-step Programming Guide

Buttons / Action	Objective	Result Screen
1. ■ + ▼ *3 seconds*	Enter pressure setting mode. Enable pressure unit setting.	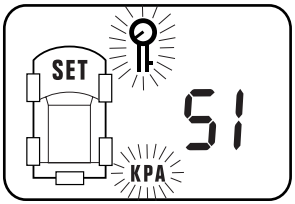
2. ▲ / ▼	Select between 'kPa' (SI unit) and 'psi' (Imperial Unit) for pressure measurement unit.	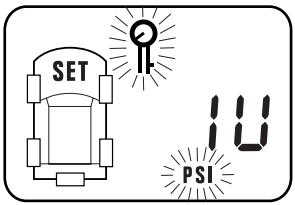

Buttons / Action	Objective	Result Screen
3.	Save pressure unit selection. Enable temperature unit setting.	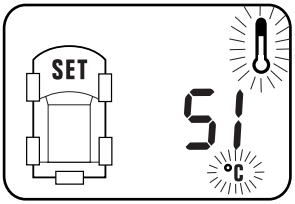
4.	Select between °C (SI unit) and °F (Imperial Unit) for temperature measurement unit.	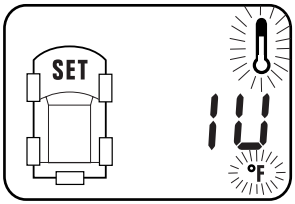
5.	Save temperature unit selection. Enable optimum pressure setting for front wheels.	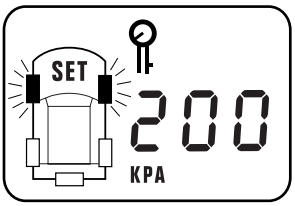
6.	Enter optimum pressure for front wheels. (Optimum pressure could be found at the side of the vehicle's door for the driver seat, or in the vehicle's instruction manual.)	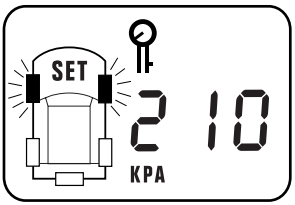
7.	Save optimum pressure for front wheels. Enable 1st warning pressure setting for front wheels.	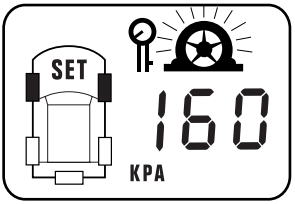
8.	Enter 1st warning pressure for front wheels. (Suggested 1st warning pressure = 20% below the optimum pressure. User may choose a pressure level lower than this to reduce the sensitivity of the system.)	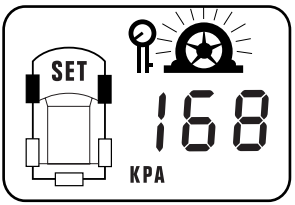

Buttons / Action	Objective	Result Screen
9. ■	Save 1st warning pressure for front wheels. Enable optimum pressure setting for rear wheels.	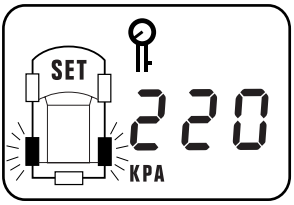
10. ▲/▼	Enter optimum pressure for rear wheels. (Optimum pressure could be found at the side of the vehicle's door for the driver seat, or in the vehicle's instruction manual.)	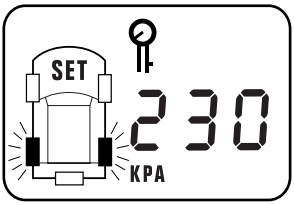
11. ■	Save optimum pressure for rear wheels. Enable 1st warning pressure setting for rear wheels.	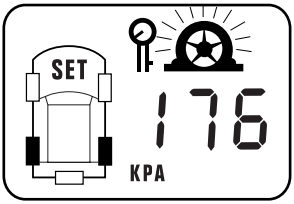
12. ▲/▼	Enter 1st warning pressure for rear wheels. (Suggested 1st warning pressure = 20% below the optimum pressure. User may choose a pressure level lower than this to reduce the sensitivity of the system.)	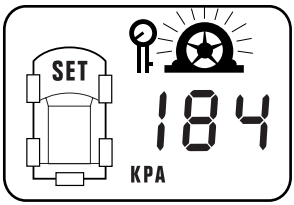
13. ■ *(Optional for selected model only)*	Save 1st warning pressure for rear wheels. Enable optimum pressure setting for spare wheel.	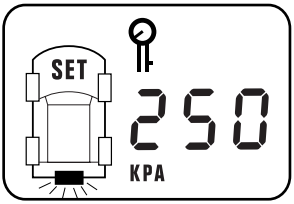
14. ▲/▼ *(Optional for selected model only)*	Enter optimum pressure for spare wheel. Enter '---' if no sensor module is installed on the spare wheel. (Optimum pressure must not exceed the maximum pressure written on the tire.)	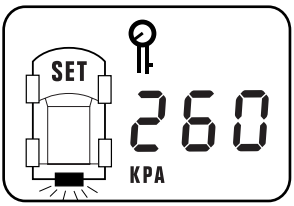

Buttons / Action	Objective	Result Screen
15. ■ *(Optional for selected model only)*	Save optimum pressure for spare wheel. Enable 1st warning pressure setting for spare wheel.	SET 200 KPA
16. ▲/▼ *(Optional for selected model only)*	Enter 1st warning pressure for spare wheel. Enter '---' if no sensor module is installed on the spare wheel.	SET 208 KPA
17. ■	Enter position setting mode.	SET 01
18. ▲/▼	Enter code for front left position.	SET 06
19. ■	Save code for front left position and select front right position.	SET 02
20. ▲/▼	Enter code for front right position.	SET 07

Buttons / Action	Objective	Result Screen
21. ■	Save code for front right position and select rear right position.	SET 03
22. ▲/▼	Enter code for rear right position.	SET 08
23. ■	Save code for rear right position and select rear left position.	SET 04
24. ▲/▼	Enter code for rear left position.	SET 09
25. ■ *(Optional for selected model only)*	Save code for rear left position and select spare tire position.	SET 05
26. ▲/▼ *(Optional for selected model only)*	Enter code for spare tire position. Enter '-' if no sensor module is installed for spare tire.	SET - -

Buttons / Action	Objective	Result Screen
27. ■	Save code for spare tire position and enter learning stage.	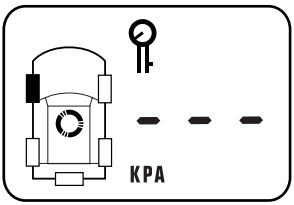
28. ***Drive the car for several minutes***	Save the unique ID codes into memory so that only data from these sensor modules are displayed, eliminating interference from other systems. Enter normal operation mode.	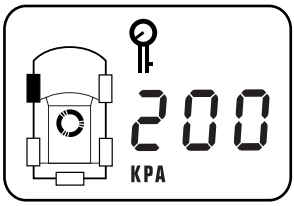
or ■ + ▼ ***3 seconds***	Re-enter programming mode.	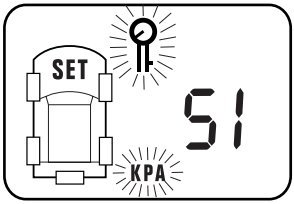

8. TROUBLESHOOTING

Symptom	Reason	Solution
Display module is blank 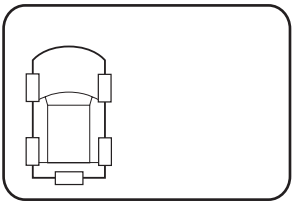	● Power is switched off. ● Power connection is loose.	● Press any button to switch on the power. ● Make sure that the power plug is securely plugged into the cigarette lighter power outlet. ● Make sure the fuse for the powerplug and power outlet is intact. ● Make sure that the wiring and connections are intact if hardwiring was done.
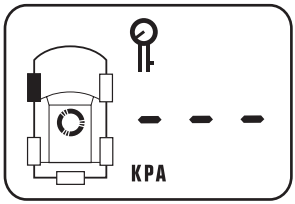	● Learning stage	● None ● The system will resume normal operation after all the unique ID codes have been learned and stored in the memory
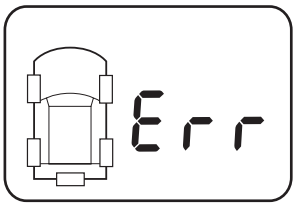	● Same ID code is allocated for more than 1 tire position	● Enter programming mode and make sure all positions are programmed with different codes ● Check the valve caps and record and make sure that the codes correspond to their programmed positions
False alert/ too frequent alert 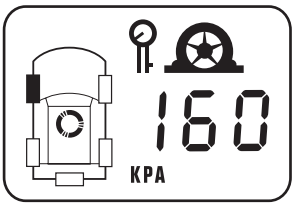	● 1st low pressure warning level is set too close to the optimum tire pressure. ● Tire quality problem.	● Enter programming mode and set a lower pressure for 1st warning. ● Check with your tire expert.

8. TROUBLESHOOTING

Symptom	Reason	Solution
Visual alert still there even after the tires are optimally inflated 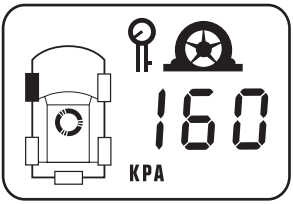	● Sensor modules have gone into power saver mode, hence not transmitted new data yet.	● Drive the vehicle in order to restart the transmission.
Pressure or temperature icon disappears momentarily 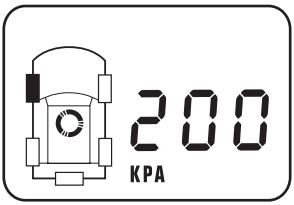	● Data is not refreshed yet.	● None. ● Data will be refreshed after driving for several minutes. ● Pull out the antenna or adjust the position of the display module to facilitate optimum signal reception.
Audio alert can not be disabled 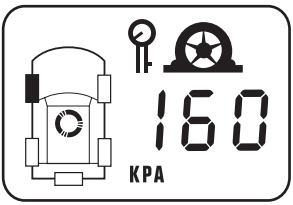	● Pressure fluctuates close to the warning level. Alert mode was activated repeatedly.	● Inflate the tire. ● Enter programming mode and set a lower pressure for 1st warning.

9. TECHNICAL SPECIFICATIONS

Sensor Module

Weight: 42 g or 1.5 oz
Size: 75 mm x 36 mm x 24 mm or 2.9" x 1.4" x 0.9"
Operating temperature range: -40°C to 125°C or -40°F to 257°F
Operating Humidity: 100% non-condensing
Pressure Measurement Range: 0 - 540 kPa or 0 - 78 psi relative pressure
Optimized Measurement Range: 150 - 350 kPa or 22 - 51 psi relative pressure
Pressure Measurement Accuracy: ±7.5 kPa or ±1 psi
Temperature Measurement Range: -40℃ to 125℃ or -40℉ to 257℉
Temperature Measurement Accuracy: ±4°C or ±7°F
Transmission Frequency: 433.92 MHz ±75 KHz
Transmission power: 50 m open field
Coding: Unique ID code to avoid interference with other systems
Battery Life (Projected): > 5 Years or 100,000 km

Display Module

Weight: 39 g or 1.4 oz
Size: 60 mm diameter x 16 mm height or 2.4" diameter x 0.6" height
1st low pressure alert: User programmable. Suggested 20% below the optimum pressure
2nd low pressure alert: System determined. 25% below the optimum pressure
High pressure alert: System determined. 35% above the optimum pressure
High temperature alert: System determined
Rapid deflation alert: System determined
Visual Alert: LCD text, icons, backlight
Audio Alert: Single beep, double beep and continuous beep. Can be deactivated via push of button
Operating Temperature Range: -40℃ to 85℃ or -40℉ to 185℉
Operating Humidity: 100% non-condensing
Receiving Frequency: 433.92 MHz ±75 KHz
Memory: Retains user's settings and unique ID code of sensor modules
Power source: Cigarette lighter power outlet or vehicle's power circuit hardwiring (<0.5A)

RECORD OF SENSOR MODULE POSITION

Color Code of Sensor Module

Color of Valve Cap	*Last 2 digits of ID Code*
Red	01
Yellow	02
Green	03
Blue	04
Black	Optional

Last 2 digits of ID Code				
Position	*Factory Default*	*Date*	*Date*	*Date*
FL	01			
FR	02			
RR	03			
RL	04			
SP	Optional			

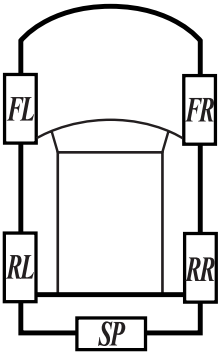

MATX TIRE MONITOR reserves the right to change the contents of this document at any time and without prior notice. The information contained in this document is proprietary and must not be reproduced without prior consent from TS MATRIX AUTO SDN. BHD.

©2004 TS MATRIX AUTO SDN. BHD.