Prüfbericht-Nr.: *Test report no.:*	CN23WDRF 001	**Auftrags-Nr.:** *Order no.:*	48224502	Seite 1 von 44 *Page 1 of 44*
Kunden-Referenz-Nr.: *Client reference no.:*	N/A	**Auftragsdatum:** *Order date:*	2023-09-25	
Auftraggeber: *Client:*	Eve Systems LLC 100 Pine St., Suite 1250, San Francisco CA 94111 USA			
Prüfgegenstand: *Test item:*	Eve Outdoor Cam			
Bezeichnung / Typ-Nr.: *Identification / Type no.:*	20ECA4102			
Auftrags-Inhalt: *Order content:*	FCC Part 15E Test report (WiFi 5GHz)			
Prüfgrundlage: *Test specification:*	FCC 47CFR Part 15: Subpart E Section 15.407			

Wareneingangsdatum: *Date of sample receipt:*	2023-09-28
Prüfmuster-Nr.: *Test sample no:*	A003572740-005 A003572740-006
Prüfzeitraum: *Testing period:*	2023-10-24 - 2023-11-06
Ort der Prüfung: *Place of testing:*	EMC/RF Taipei Testing Site
Prüflaboratorium: *Testing laboratory:*	Taipei Testing Laboratories
Prüfergebnis*: *Test result*:*	Pass

zusammengestellt von: *compiled by:*		**genehmigt von:** authorized by:	
Datum: *Date:* 2023-11-21		**Ausstellungsdatum:** *Issue date:* 2023-11-21	
Stellung / *Position:*	Ryan Chen Senior Project Manager	**Stellung** / *Position:*	Brenda Chen Senior Project Manager

Sonstiges / *Other:*

Zustand des Prüfgegenstandes bei Anlieferung: Prüfmuster vollständig und unbeschädigt
Condition of the test item at delivery: *Test item complete and undamaged*

* Legende:	1 = sehr gut	2 = gut	3 = befriedigend	4 = ausreichend	5 = mangelhaft
	P(ass) = entspricht o.g. Prüfgrundlage(n)		F(ail) = entspricht nicht o.g. Prüfgrundlage(n)	N/A = nicht anwendbar	N/T = nicht getestet
** Legend:*	*1 = very good*	*2 = good*	*3 = satisfactory*	*4 = sufficient*	*5 = poor*
	P(ass) = passed a.m. test specification(s)		*F(ail) = failed a.m. test specification(s)*	*N/A = not applicable*	*N/T = not tested*

Dieser Prüfbericht bezieht sich nur auf das o.g. Prüfmuster und darf ohne Genehmigung der Prüfstelle nicht auszugsweise vervielfältigt werden. Dieser Bericht berechtigt nicht zur Verwendung eines Prüfzeichens.
This test report only relates to the a. m. test sample. Without permission of the test center this test report is not permitted to be duplicated in extracts. This test report does not entitle to carry any test mark.

TEST SUMMARY

Report Section	FCC Clause	Test Item	Result
5.1.1	15.407(a) & 15.203	Antenna Requirement	Pass
5.1.2	15.407(a)	Maximum Conducted Output Power	Pass
5.1.3	15.407(h)(1)	Transmit Power Control (TPC)	Not Applicable
5.1.4	15.407(a)	26 dB Bandwidth	Pass
5.1.4	2.1049	99% Occupied Bandwidth	Pass
5.1.5	15.407(e)	6 dB Bandwidth (U-NII-3 Band only)	Pass
5.1.6	15.407(g)	Frequency Stability	Pass
5.1.7	15.407(a)	Power Spectral Density	Pass
5.1.8	15.407(b) & 15.205 & 15.209	Radiated Spurious Emissions and Band Edges	Pass
5.1.9	15.407(h) & KDB 905462 D02	Dynamic Frequency Selection	Pass
5.2.1	15.207	Mains Conducted Emission	Pass

Note: Determining compliance based on the results of the compliance measurement, not taking into account measurement instrumentation uncertainty.

Contents

HISTORY OF THIS TEST REPORT **5**

1. GENERAL REMARKS **6**
1.1 COMPLEMENTARY MATERIALS **6**
1.2 DECISION RULE OF CONFORMITY **6**

2. TEST SITES **7**
2.1 TEST LABORATORY **7**
2.2 TEST FACILITY **7**
2.3 TRACEABILITY **8**
2.4 CALIBRATION **8**
2.5 MEASUREMENT UNCERTAINTY **8**

3. GENERAL PRODUCT INFORMATION **9**
3.1 PRODUCT FUNCTION AND INTENDED USE **9**
3.2 SYSTEM DETAILS AND RATINGS **9**
3.3 NOISE GENERATING AND NOISE SUPPRESSING PARTS **11**
3.4 SUBMITTED DOCUMENTS **11**

4. TEST SET-UP AND OPERATION MODES **12**
4.1 PRINCIPLE OF CONFIGURATION SELECTION **12**
4.2 CARRIER FREQUENCY AND CHANNEL **13**
4.3 TEST OPERATION AND TEST SOFTWARE **14**
4.4 SPECIAL ACCESSORIES AND AUXILIARY EQUIPMENT **17**
4.5 TEST SETUP DIAGRAM **18**
4.6 DUTY CYCLE OF TEST SIGNAL **19**

5. TEST RESULTS **21**
5.1 TRANSMITTER REQUIREMENT & TEST SUITES **21**
5.1.1 Antenna Requirement *21*
5.1.2 Maximum Conducted Output Power *22*
5.1.3 Transmit Power Control (TPC) *26*
5.1.4 26 dB Bandwidth and 99% Occupied Bandwidth *27*
5.1.5 6 dB Bandwidth (5725-5850MHz) *28*
5.1.6 Frequency Stability Measurement *29*
5.1.7 Power Spectral Density *31*
5.1.8 Radiated Spurious Emissions *33*
5.1.9 Dynamic Frequency Selection *37*

5.2 MAINS EMISSION **43**
5.2.1 Mains Conducted Emission *43*

APPENDIX A - TEST RESULT OF CONDUCTED

APPENDIX B - TEST RESULT OF RADIATED EMISSIONS & MAINS CONDUCTED EMISSION

APPENDIX SP - PHOTOGRAPHS OF TEST SETUP

APPENDIX EP - PHOTOGRAPHS OF EUT

HISTORY OF THIS TEST REPORT

Revision	Description	Date Issued
R01	Original Release	2023-11-21

1. General Remarks

1.1 Complementary Materials

All attachments are integral parts of this test report. This applies especially to the following appendix:
Appendix A - Test Result of Conducted
Appendix B - Test Result of Radiated Emissions & Mains Conducted Emission
Appendix SP - Photographs of Test Setup
Appendix EP - Photographs of EUT

Applied Standard and Test Levels

Radio
FCC 47CFR Part 15: Subpart E Section 15.407
FCC 47CFR Part 2: Subpart J Section 2.1049
ANSI C63.10:2013
KDB 789033 D02 General UNII Test Procedures New Rules v02r01
KDB 905462 D02 UNII DFS Compliance Procedures New Rules v02
KDB 662911 D01 Multiple Transmitter Output v02r01

1.2 Decision Rule of Conformity

The decision rule of conformity of this test report is following the requirements of the requested standard in the quotation, and agreed among testing laboratory and manufacturer (applicant) to exclude the consideration of Measurement Uncertainty, unless it is required by the specific standard.

2. Test Sites

2.1 Test Laboratory

Taipei Testing Laboratories

11F. No.758, Sec. 4, Bade Rd., Songshan Dist.
Taipei City 105
Taiwan (R.O.C.)

2.2 Test Facility

Taipei Testing Laboratories

No.458-18, Sec. 2, Fenliao Rd., Linkou Dist.,
New Taipei City 244
Taiwan (R.O.C.)
FCC Registration No.: 180491
ISED Registration No.: 25563

2.3 Traceability

All measurement equipment calibrations are traceable to NML(Taiwan)/NIST(USA) or where calibration is performed outside Taiwan, to equivalent nationally recognized standards organizations.

2.4 Calibration

Equipment requiring calibration is calibrated periodically in a suitably accredited Calibration Lab. Additionally all equipment is verified for proper performance on a regular basics using in house standards or comparisons.

2.5 Measurement Uncertainty

All measurement uncertainty values are shown with a coverage factor of k=2 to indicate a 95% level of confidence.

Emission Measurement Uncertainty

Parameter	Uncertainty
Radiated Emission (9 kHz ~ 30 MHz)	± 1.15 dB
Radiated Emission (30 MHz ~ 200 MHz)	± 1.30 dB
Radiated Emission (200 MHz ~ 1 GHz)	± 1.30 dB
Radiated Emission (1 GHz ~ 18 GHz)	± 1.54 dB
Radiated Emission (18 GHz ~ 40 GHz)	± 2.52 dB
Mains Conducted Emission	± 1.65 dB

3. General Product Information

3.1 Product Function and Intended Use

The EUT is a Eve Outdoor Cam. It contains a WLAN compatible module enabling the user to communicate data through a Wireless interface.
For details refer to the User Guide, Data Sheet and Circuit Diagram.

3.2 System Details and Ratings

Basic Information of EUT

Item	EUT information
Kind of Equipment/Test Item	Eve Outdoor Cam
Type Identification	20ECA4102
FCC ID	SNE-ODC-002

Technical Specification of EUT

Item	EUT information
Operating Frequency	Band 1: 5180 MHz ~ 5240 MHz Band 2: 5260 MHz ~ 5320 MHz Band 3: 5500 MHz ~ 5700 MHz Band 4: 5745 MHz ~ 5825 MHz
Channel Number	Band 1: 4 for 802.11a, 802.11n HT20, 802.11ac VHT20 2 for 802.11n HT40, 802.11ac VHT40 1 for 802.11ac VHT80 Band 2: 4 for 802.11a, 802.11n HT20, 802.11ac VHT20 2 for 802.11n HT40, 802.11ac VHT40 1 for 802.11ac VHT80 Band 3: 11 for 802.11a, 802.11n HT20, 802.11ac VHT20 5 for 802.11n HT40, 802.11ac VHT40 2 for 802.11ac VHT80 Band 4: 5 for 802.11a, 802.11n HT20, 802.11ac VHT20 2 802.11n HT40, 802.11ac VHT40 1 for 802.11ac VHT80
Data Rate	802.11a: 54.0 / 48.0 / 36.0 / 24.0 / 18.0 / 12.0 / 9.0 / 6.0 Mbps 802.11n: up to MCS7 802.11ac: up to MCS9
Operation Voltage	120Vac (Tested at USB 5Vdc)
Modulation	OFDM (BPSK, QPSK, 16QAM, 64QAM, 256QAM)
Maximum Output Power (mW)	5180 ~ 5240 MHz: 81.10 5260 ~ 5320 MHz: 78.70 5500 ~ 5720 MHz: 75.68 5745 ~ 5825 MHz: 137.09
Maximum EIRP (mW)	5260 ~ 5320 MHz: 485.29 5500 ~ 5720 MHz: 435.51
DFS Mode	Slave without radar detection

Antenna Information	Refer to 5.1.1
Accessory Device	Refer to 4.4

3.3 Noise Generating and Noise Suppressing Parts

Refer to the Circuit Diagram.

3.4 Submitted Documents

- Circuit Diagram
- Instruction Manual
- Rating Label
- Technical Description

4. Test Set-up and Operation Modes

4.1 Principle of Configuration Selection

The test modes were adapted accordingly in reference to the instructions for use.
During testing, Channel and Power Controlling Software provided by the customer was used to control the operating channel as well as the output power level. The RF output power selection is for the setting of RF output expected by the customer and is going to be fixed on the firmware of the final end product.

Table for Parameters of Test Software Setting

802.11a		802.11n HT20 802.11ac VHT20		802.11n HT40 802.11ac VHT40		802.11ac VHT80	
Channel	Power Setting	Channel	Power Setting	Channel	Power Setting	Channel	Power Setting
36	14.5	36	14.5	38	11.5	42	9.5
40	18.5	40	20.5	46	18.5	58	11.5
48	20	48	19	54	20.5	106	10.5
52	20	52	20.5	62	12.5	155	19.5
60	20.5	60	20.5	102	12.5		
64	17.5	64	20.5	110	18.5		
100	13.5	100	15	134	17.5		
116	20.5	116	20.5	151	21.5		
140	13.5	140	15.5	159	23		
149	20	149	22.5				
157	22.5	157	24				
165	20	165	24				

4.2 Carrier Frequency and Channel

Band	Channel	Frequency (MHz)	802.11a 802.11n HT20 802.11ac VHT20	802.11n HT40 802.11ac VHT40	802.11ac VHT80
U-NII-1 (Band 1)	36	5180	V		
	38	5190		V	
	40	5200	V		
	42	5210			V
	44	5220	V		
	46	5230		V	
	48	5240	V		
U-NII-2A (Band 2)	52	5260	V		
	54	5270		V	
	56	5280	V		
	58	5290			V
	60	5300	V		
	62	5310		V	
	64	5320	V		
U-NII-2C (Band 3)	100	5500	V		
	102	5510		V	
	104	5520	V		
	106	5530			V
	108	5540	V		
	110	5550		V	
	112	5560	V		
	116	5580	V		
	118	5590		V	
	120	5600			
	122	5610			
	124	5620			
	126	5630			
	128	5640			
	132	5660	V		
	134	5670		V	
	136	5680	V		
	140	5700	V		
Straddle Channel	138	5690			
	142	5710			
	144	5720			
U-NII-3 (Band 4)	149	5745	V		
	151	5755		V	
	153	5765	V		
	155	5775			V
	157	5785	V		
	159	5795		V	
	161	5805	V		
	165	5825	V		

4.3 Test Operation and Test Software

Setup for testing: Test samples are provided with a USB interface which makes it possible to control them through a test software installed on a notebook computer.
This software was running on the laptop computer connected to the EUT. It was used to enable the operation modes listed as below.

Test Software	Tera Term

The samples were used as follows:
A003572740-005
A003572740-006
Full test was applied on all test modes, but only worst case was shown.

Modulation Mode	Tx Function
802.11a	1TX (SISO)
802.11n HT20	1TX (SISO)
802.11n HT40	1TX (SISO)
802.11ac VHT20	1TX (SISO)
802.11ac VHT40	1TX (SISO)
802.11ac VHT80	1TX (SISO)

EUT Configure Mode	Applicable To				Description
	Antenna Port Conducted Measurement	Radiated Spurious Emissions above 1 GHz	Radiated Spurious Emissions below 1 GHz	Mains Conducted Emission	
-	√	√	√	√	-

Note:
1. The EUT had been pre-tested on the positioned of each 3 axis. The worst case was found when position on Y-plane.
2. "-" means no effect.

Antenna Port Conducted Measurement

☒ Pre-Scan full test was applied on all test modes, but only worst case was shown.
☒ Following channel(s) was (were) selected for the final test as listed below.

EUT Configure Mode	Mode	Frequency (MHz)	Available Channel	Tested Channel	Date Rate (Mbps)
-	802.11a	5180-5240	36 to 48	36, 40, 48	6.0
-		5260-5320	52 to 64	52, 60, 64	
-		5500-5700	100 to 140	100, 116, 140	
-		5745-5825	149 to 165	149, 157, 165	
-	802.11n HT20	5180-5240	36 to 48	36, 40, 48	MCS0
-		5260-5320	52 to 64	52, 60, 64	
-		5500-5700	100 to 140	100, 116, 140	
-		5745-5825	149 to 165	149, 157, 165	
-	802.11n HT40	5180-5240	38 to 46	38, 46	MCS0
-		5260-5320	54 to 62	54, 62	
-		5500-5700	102 to 134	102, 110, 134	
-		5745-5825	151 to 159	151, 159	
-	802.11ac VHT20	5180-5240	36 to 48	36, 40, 48	NSS1 MCS0
-		5260-5320	52 to 64	52, 60, 64	
-		5500-5700	100 to 140	100, 116, 140	
-		5745-5825	149 to 165	149, 157, 165	
-	802.11ac VHT40	5180-5240	38 to 46	38, 46	NSS1 MCS0
-		5260-5320	54 to 62	54, 62	
-		5500-5700	102 to 134	102, 110, 134	
-		5745-5825	151 to 159	151, 159	
-	802.11ac VHT80	5180-5240	42	42	NSS1 MCS0
-		5260-5320	58	58	
-		5500-5700	106 to 122	106	
-		5745-5825	155	155	

Radiated Spurious Emissions (Above 1 GHz)

☒ Pre-Scan full test was applied on all test modes, but only worst case was shown.
☒ Following channel(s) was (were) selected for the final test as listed below.

EUT Configure Mode	Mode	Frequency (MHz)	Available Channel	Tested Channel	Date Rate (Mbps)
-	802.11a	5180-5240	36 to 48	36, 40, 48	6.0
-		5260-5320	52 to 64	52, 60, 64	
-		5500-5700	100 to 140	100, 116, 140	
-		5745-5825	149 to 165	149, 157, 165	
-	802.11ac VHT20	5180-5240	36 to 48	36, 40, 48	NSS1 MCS0
-		5260-5320	52 to 64	52, 60, 64	
-		5500-5700	100 to 140	100, 116, 140	
-		5745-5825	149 to 165	149, 157, 165	
-	802.11ac VHT40	5180-5240	38 to 46	38, 46	NSS1 MCS0
-		5260-5320	54 to 62	54, 62	
-		5500-5700	102 to 134	102, 110, 134	
-		5745-5825	151 to 159	151, 159	
-	802.11ac VHT80	5180-5240	42	42	NSS1 MCS0
-		5260-5320	58	58	
-		5500-5700	106 to 122	106	
-		5745-5825	155	155	

Radiated Spurious Emissions (Below 1 GHz)

☒ Pre-Scan full test was applied on all test modes, but only worst case was shown.

☒ Following channel(s) was (were) selected for the final test as listed below.

EUT Configure Mode	Mode	Frequency (MHz)	Available Channel	Tested Channel	Date Rate (Mbps)
-	802.11ac VHT40	5180-5240	38 to 46	38	NSS1 MCS0

Mains Conducted Emission Test

☒ Pre-Scan full test was applied on all test modes, but only worst case was shown.

☒ Following channel(s) was (were) selected for the final test as listed below.

EUT Configure Mode	Mode	Frequency (MHz)	Available Channel	Tested Channel	Date Rate (Mbps)
-	802.11ac VHT40	5180-5240	38 to 46	38	NSS1 MCS0

Test Condition

Test Item	Ambient Temperature	Relative Humidity	Tested by
Conducted Measurement	24.4-24.5 °C	61-57 %	Zeke Wang
Radiated Spurious Emissions above 1 GHz	24.1-25.9 °C	58-59 %	Ivan Chiang
Radiated Spurious Emissions below 1 GHz	24.1-25.9 °C	58-59 %	Ivan Chiang
Mains Conducted Emission	19.1-25.9 °C	50.2-58.9 %	Roger Liao

4.4 Special Accessories and Auxiliary Equipment

The product has been tested together with the following additional accessories:

Accessory of EUT

None.

Support Unit

No.	Description	Brand	Model	S/N	Remark
Radiated and Mains Conducted Test					
1	Power Cord	TUV	TUV-001	--	175 cm length
Conducted Test					
-	Notebook	Lenovo	81BL	MP1DCD6Y	NB-09
DFS Test					
-	Notebook	HP	TPN-C139	CND93662WT	NB-07
-	UART：USB To TTL	JIN HUA	CP2102	--	--
-	AP-5G	NetGear	R7800	4H75745800509	--

4.5 Test Setup Diagram

<Radiated Spurious Emissions Mode>

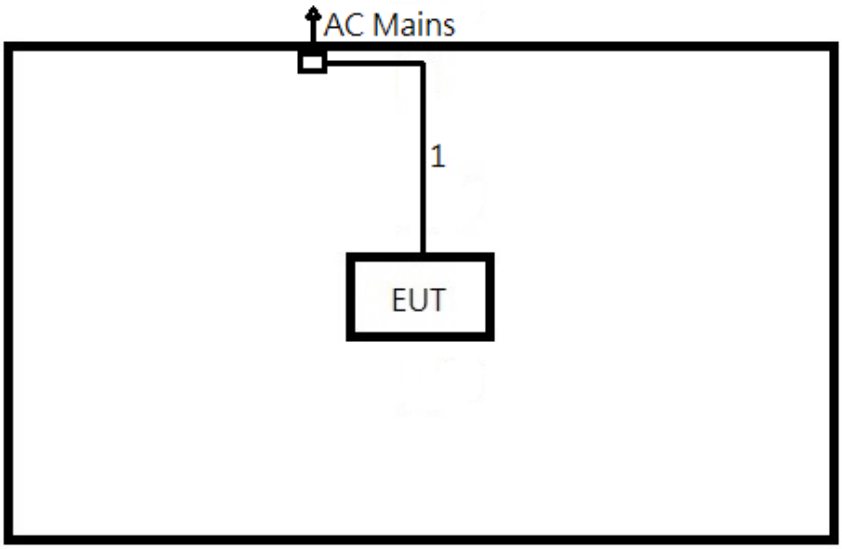

<Mains Conducted Emission Mode>

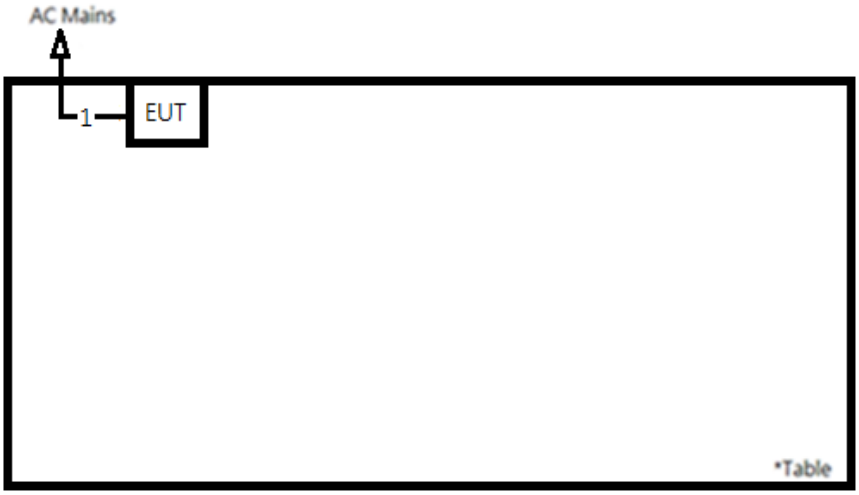

4.6 Duty Cycle of Test Signal

Mode	On + Off Time (ms)	On Time (ms)	Duty Cycle (%)	Duty Factor (dB)
802.11a	1.535	1.43	93.16	0.31
802.11n HT20	1.44	1.335	92.71	0.33
802.11n HT40	1.44	1.34	93.06	0.31
802.11ac VHT20	1.445	1.345	93.08	0.31
802.11ac VHT40	0.77	0.668	86.75	0.62
802.11ac VHT80	0.434	0.332	76.50	1.16

802.11a

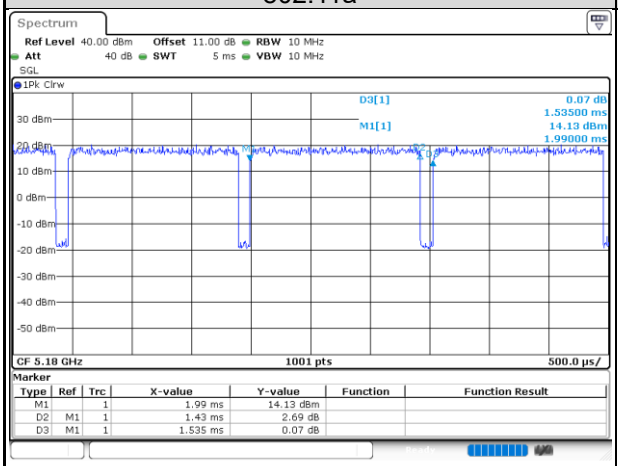

802.11n HT20

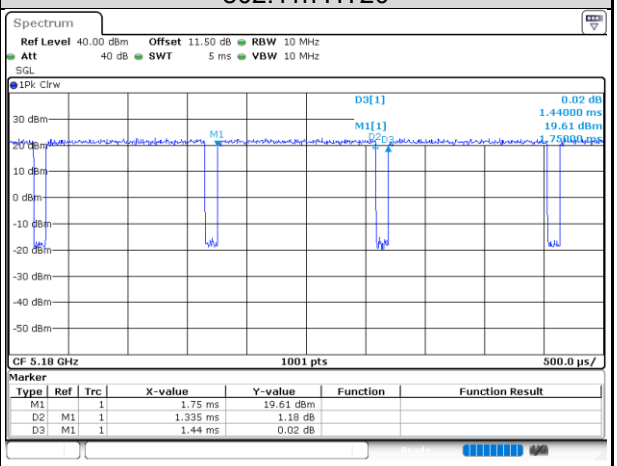

802.11n HT40

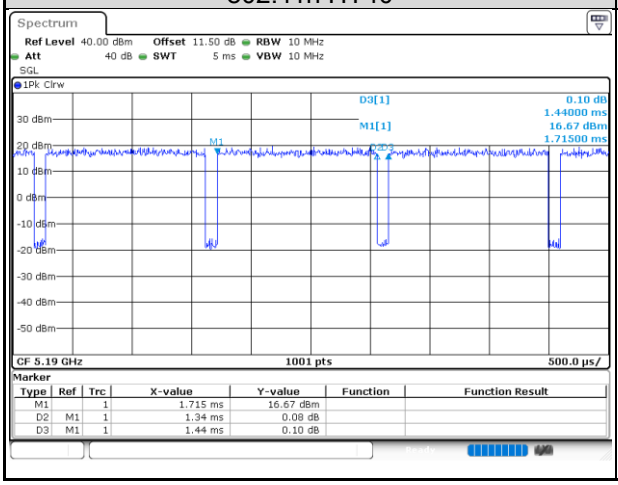

802.11ac VHT20

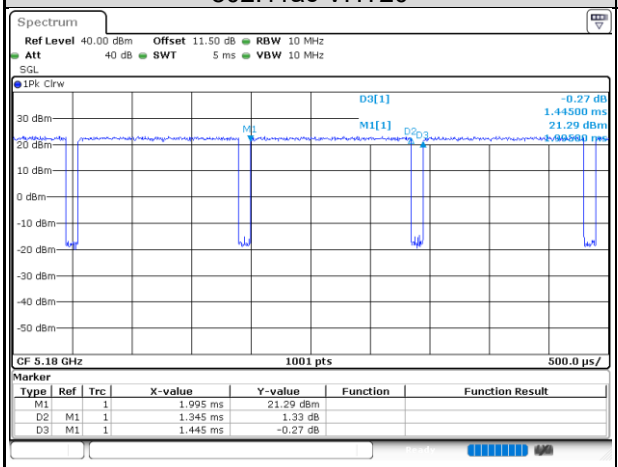

802.11ac VHT40

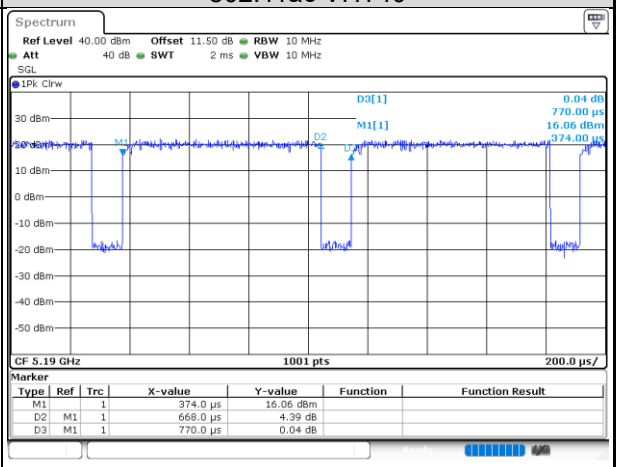

802.11ac VHT80

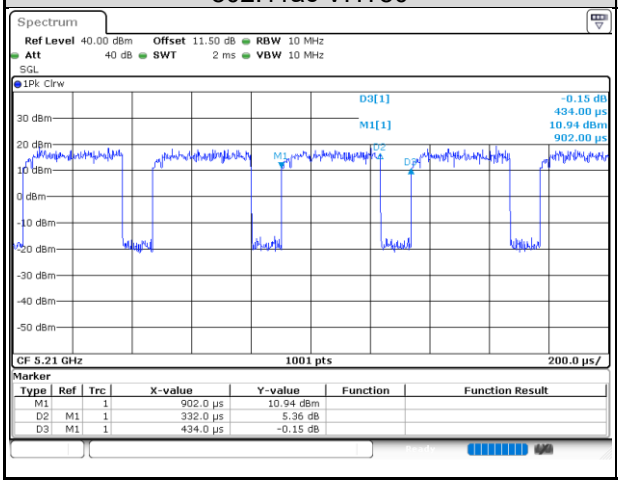

5. Test Results

5.1 Transmitter Requirement & Test Suites

5.1.1 Antenna Requirement

Requirement Use of approved antennas only

According to the manufacturer declaration, the EUT's antenna specifications are described as below. The antenna is used with no possibility of replacement with a non-approved antenna by the end-user. Therefore, the EUT is considered to comply with this provision.

PCB antenna with 7.9 dBi gain (5180 ~ 5240 MHz)
PCB antenna with 7.9 dBi gain (5260 ~ 5320 MHz)
PCB antenna with 7.6 dBi gain (5500 ~ 5700 MHz)
PCB antenna with 8.1 dBi gain (5745 ~ 5825 MHz)

Refer to EUT photo for details.

5.1.2 Maximum Conducted Output Power

Limit

Operation Band	EUT Category	Limit
U-NII-1	Outdoor Access Point	1 Watt (30 dBm) (Max. e.i.r.p ≦ 125 mW (21 dBm) at any elevation angle above 30 degrees as measured from the horizon)
	Fixed point-to-point Access Point	1 Watt (30 dBm)
	Indoor Access Point	1 Watt (30 dBm)
	Mobile and Portable client device	250 mW (24 dBm)
U-NII-2A	---	250 mW (24 dBm) or 11 dBm + 10 log B*
U-NII-2C	---	250 mW (24 dBm) or 11 dBm + 10 log B*
U-NII-3	---	1 Watt (30 dBm)

Note: B* is the 26 dB emission bandwidth in megahertz

Per KDB 662911 Method of conducted output power measurement on IEEE 802.11 devices,

Array Gain = 0 dB (i.e., no array gain) for $N_{ANT} \leq 4$;

Array Gain = 0 dB (i.e., no array gain) for channel widths ≥ 40 MHz for any N_{ANT};

Array Gain = 5 log(N_{ANT}/N_{SS}) dB or 3 dB, whichever is less for 20 MHz channel widths with $N_{ANT} \geq 5$.

For power measurements on all other devices: Array Gain = 10 log(N_{ANT}/N_{SS}) dB.

Kind of Test Site Shielded room

Test Setup

Test Instruments

Kind of Equipment	Manufacturer	Type	S/N	Calibration Date	Calibration Due Date	Test Date	
						From	Until
Power Meter	Anritsu	ML2495A	1901008	2023/3/17	2024/3/16	2023/10/24	2023/11/6
Power Sensor	Anritsu	MA2411B	1725269	2023/3/17	2024/3/16	2023/10/24	2023/11/6

Test Procedures

Method PM is used to perform output power measurement, trigger and gating function of wide band power meter is enabled to measure max output power of TX on burst and set the detector to AVERAGE. Duty factor is not added to measured value.

Test Result

<802.11a>

Channel	Channel Frequency (MHz)	Average Output Power		Limit (dBm)
		(dBm)	(mW)	
36	5180	14.36	27.29	22.10
40	5200	17.56	57.02	22.10
48	5240	19.09	81.10	22.10
52	5260	18.78	75.51	22.10
60	5300	18.89	77.45	22.10
64	5320	16.48	44.46	22.10
100	5500	12.89	19.45	22.40
116	5580	18.79	75.68	22.40
140	5700	12.42	17.46	22.40
149	5745	18.58	72.11	27.90
157	5785	19.62	91.62	27.90
165	5825	18.04	63.68	27.90

Note:
For U-NII-2A, U-NII-2C Band:
1. 11 dBm + 10log (33.17) = 26.21 dBm > 24 dBm.
2. 11 dBm + 10log (33.17) = 26.21 dBm > 24 dBm.
3. 11 dBm + 10log (23.34) = 24.68 dBm > 24 dBm.
4. 11 dBm + 10log (21.90) = 24.40 dBm > 24 dBm.
5. 11 dBm + 10log (33.33) = 26.23 dBm > 24 dBm.
6. 11 dBm + 10log (21.94) = 24.41 dBm > 24 dBm.

<802.11n HT20>

Channel	Channel Frequency (MHz)	Average Output Power		Limit (dBm)
		(dBm)	(mW)	
36	5180	13.90	24.55	22.10
40	5200	18.85	76.74	22.10
48	5240	17.95	62.37	22.10
52	5260	18.56	71.78	22.10
60	5300	18.64	73.11	22.10
64	5320	18.57	71.94	22.10
100	5500	14.32	27.04	22.40
116	5580	18.40	69.18	22.40
140	5700	14.05	25.41	22.40
149	5745	19.71	93.54	27.90
157	5785	21.31	135.21	27.90
165	5825	21.20	131.83	27.90

<802.11n HT40>

Channel	Channel Frequency (MHz)	Average Output Power		Limit (dBm)
		(dBm)	(mW)	
38	5190	11.55	14.29	22.10
46	5230	17.45	55.59	22.10
54	5270	18.94	78.34	22.10
62	5310	12.45	17.58	22.10
102	5510	12.15	16.41	22.40
110	5550	17.21	52.60	22.40
134	5670	16.20	41.69	22.40
151	5755	19.52	89.54	27.90
159	5795	21.33	135.83	27.90

<802.11ac VHT20>

Channel	Channel Frequency (MHz)	Average Output Power		Limit (dBm)
		(dBm)	(mW)	
36	5180	13.93	24.72	22.10
40	5200	18.88	77.27	22.10
48	5240	17.97	62.66	22.10
52	5260	18.59	72.28	22.10
60	5300	18.67	73.62	22.10
64	5320	18.58	72.11	22.10
100	5500	14.34	27.16	22.40
116	5580	18.41	69.34	22.40
140	5700	14.07	25.53	22.40
149	5745	19.73	93.97	27.90
157	5785	21.33	135.83	27.90
165	5825	21.27	133.97	27.90

Note:
For U-NII-2A, U-NII-2C Band:
1. 11 dBm + 10log (35.16) = 26.46 dBm > 24 dBm.
2. 11 dBm + 10log (33.97) = 26.31 dBm > 24 dBm.
3. 11 dBm + 10log (35.01) = 26.44 dBm > 24 dBm.
4. 11 dBm + 10log (22.54) = 24.53 dBm > 24 dBm.
5. 11 dBm + 10log (34.09) = 26.33 dBm > 24 dBm.
6. 11 dBm + 10log (22.50) = 24.52 dBm > 24 dBm.

<802.11ac VHT40>

Channel	Channel Frequency (MHz)	Average Output Power		Limit (dBm)
		(dBm)	(mW)	
38	5190	11.58	14.39	22.10
46	5230	17.49	56.10	22.10
54	5270	18.96	78.70	22.10
62	5310	12.49	17.74	22.10
102	5510	12.19	16.56	22.40
110	5550	17.23	52.84	22.40
134	5670	16.21	41.78	22.40
151	5755	19.55	90.16	27.90
159	5795	21.37	137.09	27.90

Note:
For U-NII-2A, U-NII-2C Band:
1. 11 dBm + 10log (74.25) = 29.71 dBm > 24 dBm.
2. 11 dBm + 10log (39.88) = 27.01 dBm > 24 dBm.
3. 11 dBm + 10log (39.88) = 27.01 dBm > 24 dBm.
4. 11 dBm + 10log (51.47) = 28.12 dBm > 24 dBm.
5. 11 dBm + 10log (47.71) = 27.79 dBm > 24 dBm.

<802.11ac VHT80>

Channel	Channel Frequency (MHz)	Average Output Power		Limit (dBm)
		(dBm)	(mW)	
42	5210	8.79	7.57	22.10
58	5290	10.91	12.33	22.10
106	5530	9.82	9.59	22.40
155	5775	17.33	54.08	27.90

Note:
For U-NII-2A, U-NII-2C Band:
1. 11 dBm + 10log (81.52) = 30.11 dBm > 24 dBm.
2. 11 dBm + 10log (81.52) = 30.11 dBm > 24 dBm.

5.1.3 Transmit Power Control (TPC)

Requirement U-NII devices operating in the 5.25-5.35 GHz band and the 5.47-5.725 GHz band shall emply a TPC mechanism. The U-NII device is required to have capability to operate at least 6 dB below the mean EIRP value of 30 dBm. A TPC mechanism is not required for systems with an e.i.r.p of less than 500 mW.

Maximum EIRP of this device is 485.29mW which is less than 500mW, therefor it's not require TPC function.

TPC	E.I.R.P	15.407(h)(1)
	> 500mW	The TPC mechanism is required for system with an E.I.R.P. of above 500mW
V	< 500mW	-

5.1.4 26 dB Bandwidth and 99% Occupied Bandwidth

Kind of Test Site Shielded room

Test Setup

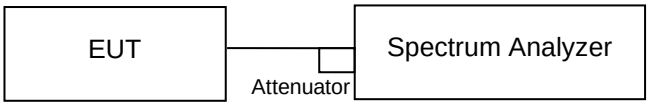

Test Instruments

Kind of Equipment	Manufacturer	Type	S/N	Calibration Date	Calibration Due Date	Test Date	
						From	Until
Spectrum Analyzer	R&S	FSV	101512	2023/02/23	2024/02/22	2023/10/24	2023/11/6
Thermal Chamber	Giant Force	GHT-150-40-CP-SD	MAA1902-011	2023/04/10	2024/04/09	2023/10/24	2023/11/6

Test Procedure

a. Set RBW = approximately 1% of the emission bandwidth.
b. Set the VBW > RBW.
c. Detector = Peak.
d. Trace mode = max hold.
e. Measure the maximum width of the emission that is 26 dB down from the peak of the emission. Compare this with the RBW setting of the analyzer. Readjust RBW and repeat measurement as needed until the RBW/EBW ratio is approximately 1%.
f. For 99% Bandwidth Measurement, the transmitter output was connected to the spectrum analyzer through an attenuator. The bandwidth of the fundamental frequency was measured by spectrum analyzer with resolution bandwidth in the range of 1% to 5% of the anticipated emission bandwidth, and a video bandwidth at least 3x the resolution bandwidth and set the detector to PEAK. The width of a frequency band such that, below the lower and above the upper frequency limits, the mean powers emitted are each equal to a specified percentage 0.5% of the total mean power of a given emission.

Test Results

Please refer to Appendix A

5.1.5 6 dB Bandwidth (5725-5850MHz)

Kind of Test Site Shielded room

Test Setup

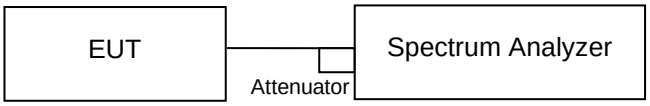

Test Instruments

Kind of Equipment	Manufacturer	Type	S/N	Calibration Date	Calibration Due Date	Test Date	
						From	Until
Spectrum Analyzer	R&S	FSV	101512	2023/02/23	2024/02/22	2023/10/24	2023/11/6
Thermal Chamber	Giant Force	GHT-150-40-CP-SD	MAA1902-011	2023/04/10	2024/04/09	2023/10/24	2023/11/6

Test Procedure

MEASUREMENT PROCEDURE REF

a. Set resolution bandwidth (RBW) = 100 kHz
b. Set the video bandwidth (VBW) ≥ 3 x RBW, Detector = Peak.
c. Trace mode = max hold.
d. Sweep = auto couple.
e. Measure the maximum width of the emission that is constrained by the frequencies associated with the two amplitude points (upper and lower) that are attenuated by 6 dB relative to the maximum level measured in the fundamental emission.

Test Results

Please refer to Appendix A

5.1.6 Frequency Stability Measurement

Kind of Test Site Shielded room

Test Setup

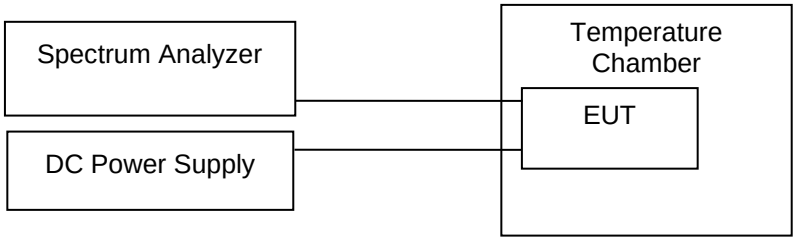

Test Instruments

Kind of Equipment	Manufacturer	Type	S/N	Calibration Date	Calibration Due Date	Test Date	
						From	Until
Spectrum Analyzer	R&S	FSV	101512	2023/02/23	2024/02/22	2023/10/24	2023/11/6
Thermal Chamber	Giant Force	GHT-150-40-CP-SD	MAA1902-011	2023/04/10	2024/04/09	2023/10/24	2023/11/6

Test Procedure

a. To ensure emission at the band edge is maintained within the authorized band, those values shall be measured by radiation emissions at upper and lower frequency points, and finally compensated by frequency deviation as procedures below.

b. The EUT was operated at the maximum output power, and connected to the spectrum analyzer, which is set to maximum hold function and peak detector. The peak value of the power envelope was measured and noted. The upper and lower frequency points were respectively measured relatively 10 dB lower than the measured peak value.

c. The frequency deviation was calculated by adding the upper frequency point and the lower frequency point divided by two. Those detailed values of frequency deviation are provided in table below.

Test Results

U-NII-3

Frequency (MHz)	5785			
Voltage (V)	Measurement Frequency (MHz)			Max. Deviation (ppm)
132	5785.009803			1.695
120	5785.007986			1.380
108	5785.002641			0.457
Temperature (°C)	Measurement Frequency (MHz)			
	0 Minute	2 Minute	5 Minute	10 Minute
50	5785.017355	5785.009672	5785.010534	5785.007017
40	5785.009287	5785.019602	5785.010649	5785.006240
30	5785.015407	5785.018002	5785.016552	5785.012338
20	5785.002057	5785.014207	5785.017426	5785.010019
10	5785.002078	5785.003082	5785.007248	5785.002372
0	5785.011454	5785.007898	5785.016721	5785.012625
-10	5785.000534	5785.01064	5785.009615	5785.012277
-20	5785.009938	5785.00015	5785.019968	5785.013408
Max. Deviation (ppm)	3.262	3.685	3.753	2.520

5.1.7 Power Spectral Density

Limit

For the 5.15~5.25GHz Bands:
For mobile and portable client devices in the 5.15~5.25GHz band, the Maximum Power spectral density shall not exceed 11dBm/MHz. For an indoor access point operating in the band 5.15~5.25GHz, the maximum power spectral density shall not exceed 17dBm/MHz.

For the 5.25~5.35GHz and 5.47~5.725GHz Bands:
The maximum power spectral density shall not exceed 11dBm/MHz.

For the 5.745~5.85GHz Bands:
The maximum power spectral density shall not exceed 30dBm/500kHz.

Kind of Test Site Shielded room

Test Setup

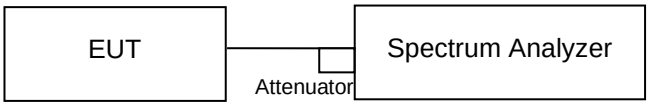

Test Instruments

Kind of Equipment	Manufacturer	Type	S/N	Calibration Date	Calibration Due Date	Test Date	
						From	Until
Spectrum Analyzer	R&S	FSV	101512	2023/02/23	2024/02/22	2023/10/24	2023/11/6
Thermal Chamber	Giant Force	GHT-150-40-CP-SD	MAA1902-011	2023/04/10	2024/04/09	2023/10/24	2023/11/6

Test Procedure

For U-NII-1, U-NII-2A, U-NII-2C band:
Using method SA-2

1. Set span to encompass the entire emission bandwidth (EBW) of the signal.
2. Set RBW = 1 MHz, Set VBW ≥ 3 MHz, Detector = RMS
3. Sweep time = auto, trigger set to “free run”.
4. Trace average at least 100 traces in power averaging mode.
5. Record the max value and add 10 log (1/duty cycle)

※For U-NII-3:

1. Set span to encompass the entire emission bandwidth (EBW) of the signal.
2. Set RBW = 500 kHz, Set VBW ≥ 3 RBW, Detector = RMS
3. Use the peak marker function to determine the maximum power level in any 500 kHz band segment within the fundamental EBW.
4. Sweep time = auto, trigger set to “free run”.
5. Trace average at least 100 traces in power averaging mode.
6. Record the max value and add 10 log (1/duty cycle)

For MIMO mode, calculation method follows FCC KDB 662911 Method 2) a) of power density measurement using for calculating total power density. Total power density is summing entire spectra across corresponding frequency bins on the various outputs by computer.

Test Results

Please refer to Appendix A

5.1.8 Radiated Spurious Emissions

Limit

Radiated emissions which fall in the restricted bands, as defined in §15.205(a), must comply with the radiated emission limits specified in §15.209(a).
Emissions radiated outside the restricted and authorized frequency bands must either comply with the radiated emission limits specified for the restricted bands or in §15.407(b).

Kind of Test Site 3m Semi-Anechoic Chamber

Test Setup

<Radiated Emissions below 30 MHz>

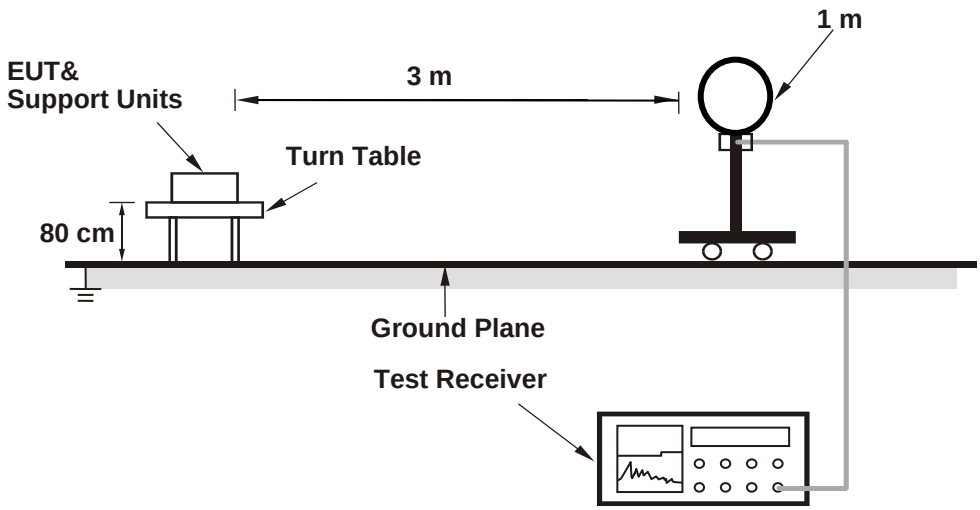

<Radiated Emissions 30 MHz to 1 GHz>

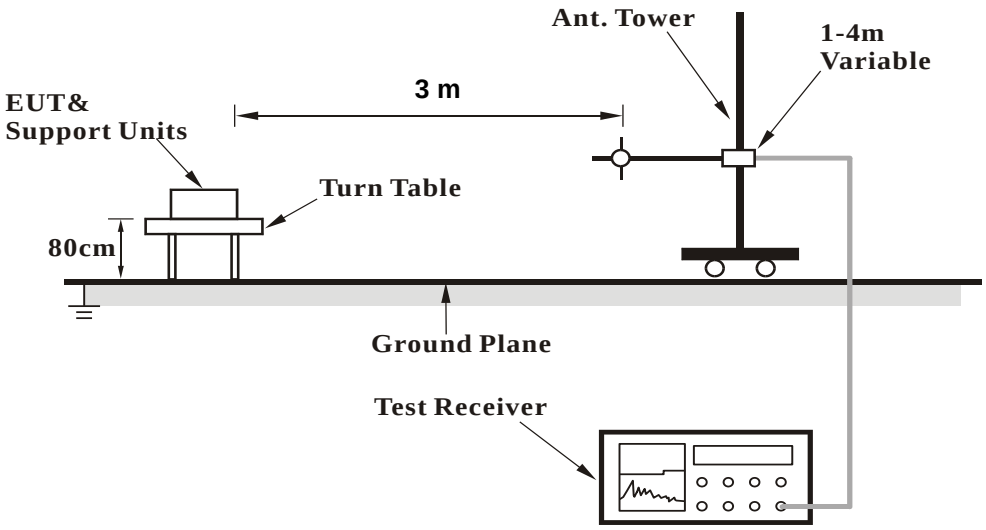

<Radiated Emissions above 1 GHz>

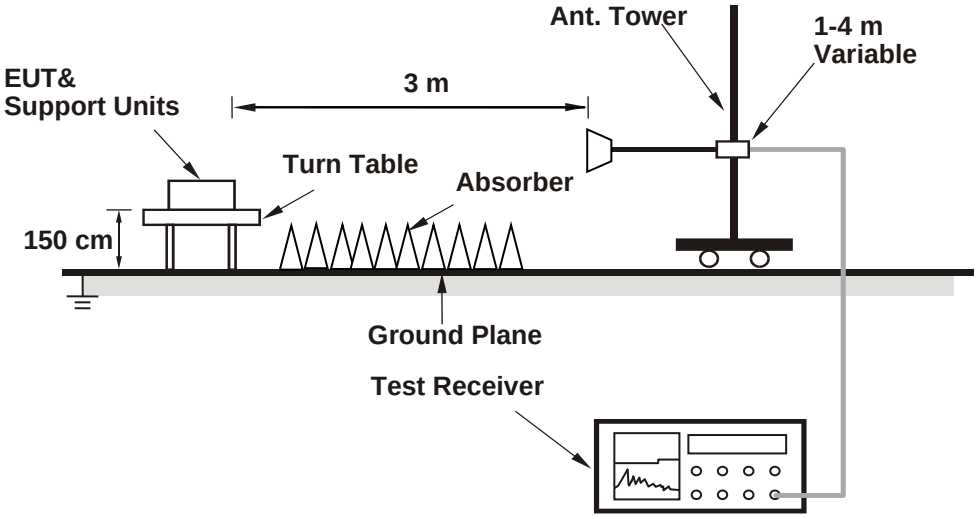

For the actual test configuration, please refer to the attached file (Test Setup Photo).

Test Instruments

Test Date: 2023/10/27 ~ 2023/10/31

Kind of Equipment	Manufacturer	Type	S/N	Calibration Date	Calibration Due Date
Above 1GHz					
Signal Analyzer	R&S	FSV40	101508	2023/4/20	2024/4/18
Horn Antenna	ETS-Lindgren	3117	00218929	2022/12/8	2023/12/7
HF-AMP + AC source	EMCI	EMC051845SE	980633	2023/2/22	2024/2/21
HF-AMP + AC source	EMCI	EMC184045SE	980657	2023/2/16	2024/2/15
Horn Antenna	SCHWARZBECK	BBHA 9170	00218930	2022/12/8	2023/12/7
30MHz – 1GHz					
Receiver	R&S	ESR7	102109	2023/2/24	2024/2/23
Bilog Antenna	SCHWARZBECK	VULB9618	00951	2023/3/31	2024/3/30
LF-AMP	Agilent	8447D	2944A10772 2	2023/3/22	2024/3/20
Below 30MHz					
Receiver	R&S	ESR7	102109	2023/2/24	2024/2/23
Loop Antenna	SCHWARZBECK	FMZB 1519B	00215	2023/1/4	2024/1/3

Test Procedures

For Radiated Emissions below 30 MHz

a. The EUT was placed on the top of a rotating table 0.8 meters above the ground at a 3 meter chamber room. The table was rotated 360 degrees to determine the position of the highest radiation.
b. The EUT was set 3 meters away from the interference-receiving antenna, which was mounted on the top of a variable-height antenna tower.
c. Parallel (OPEN), perpendicular (CLOSE), and ground-parallel (GROUND) orientations of the antenna are set to make the measurement.
d. For each suspected emission, the EUT was arranged to its worst case and the rotatable table was turned from 0 degrees to 360 degrees to find the maximum reading.
e. The test-receiver system was set to Quasi-Peak Detect Function and Specified Bandwidth with Maximum Hold Mode.

Note:

1. The resolution bandwidth and video bandwidth of test receiver/spectrum analyzer is 9 kHz at frequency below 30 MHz.
2. All modes of operation were investigated and the worst-case emissions are reported.

For Radiated Emissions above 30 MHz

a. The EUT was placed on the top of a rotating table 0.8 meters (for 30 MHz ~ 1 GHz) / 1.5 meters (for above 1 GHz) above the ground at 3 meter chamber room for test. The table was rotated 360 degrees to determine the position of the highest radiation.
b. The EUT was set 3 meters away from the interference-receiving antenna, which was mounted on the top of a variable-height antenna tower.
c. The height of antenna is varied from one meter to four meters above the ground to determine the maximum value of the field strength. Both horizontal and vertical polarizations of the antenna are set to make the measurement.
d. For each suspected emission, the EUT was arranged to its worst case and then the antenna was tuned to heights from 1 meter to 4 meters and the rotatable table was turned from 0 degrees to 360 degrees to find the maximum reading.
e. The test-receiver system was set to quasi-peak detect function and specified bandwidth with maximum hold mode when the test frequency is below 1 GHz.
f. The test-receiver system was set to peak and average detected function and specified bandwidth with maximum hold mode when the test frequency is above 1 GHz. If the peak reading value also meets average limit, measurement with the average detector is unnecessary.

Note:

1. The resolution bandwidth and video bandwidth of test receiver/spectrum analyzer is 120 kHz for Quasi-peak detection (QP) or Peak detection (PK) at frequency below 1 GHz.
2. The resolution bandwidth of test receiver/spectrum analyzer is 1 MHz and the video bandwidth is 3 MHz for Peak detection (PK) at frequency above 1 GHz.
3. The resolution bandwidth of test receiver/spectrum analyzer is 1 MHz and the video bandwidth is ≥ 1/T (Duty cycle < 98 %) or 10 Hz (Duty cycle ≥ 98 %) for Average detection (AV) at frequency above 1 GHz.
4. All modes of operation were investigated and the worst-case emissions are reported.
5. The Radiated Emissions testing was performed in the X(E1), Y(H) and Z(E2) axis orientation. The worst-case Axis orientation is recorded in this test report.

6. The emission levels of other frequencies (including the 10th harmonic of the highest fundamental frequency) are very lower than the limit and are not shown in the test report.

Test Results

Factor (dB/m) = Antenna Factor (dB/m) + Cable Loss (dB)
Level (dBuV/m) = Reading (dBuV) + Factor (dB/m)

Please refer to Appendix B.

5.1.9 Dynamic Frequency Selection

Limit

<DFS Detection Thresholds for Master Devices and Client Devices with Radar Detection>

Maximum Transmit Power	Value (See Notes 1, 2, and 3)
EIRP ≥ 200 milliwatt	-64 dBm
EIRP < 200 milliwatt and power spectral density < 10 dBm/MHz	-62 dBm
EIRP < 200 milliwatt that do not meet the power spectral density requirement	-64 dBm
Note 1: This is the level at the input of the receiver assuming a 0 dBi receive antenna. Note 2: Throughout these test procedures an additional 1 dB has been added to the amplitude of the test transmission waveforms to account for variations in measurement equipment. This will ensure that the test signal is at or above the detection threshold level to trigger a DFS response. Note 3: EIRP is based on the highest antenna gain. For MIMO devices refer to KDB Publication 662911 D01.	

<DFS Response Requirement Values>

Parameter	Value
Non-occupancy period	Minimum 30 minutes
Channel Availability Check Time	60 seconds
Channel Move Time	10 seconds See Note 1.
Channel Closing Transmission Time	200 milliseconds + an aggregate of 60 milliseconds over remaining 10 second period. See Notes 1 and 2.
U-NII Detection Bandwidth	Minimum 100% of the U-NII 99% transmission power bandwidth. See Note 3.
Note 1: *Channel Move Time and the Channel Closing Transmission Time* should be performed with Radar Type 0. The measurement timing begins at the end of the Radar Type 0 burst. Note 2: The *Channel Closing Transmission Time* is comprised of 200 milliseconds starting at the beginning of the *Channel Move Time* plus any additional intermittent control signals required to facilitate a *Channel* move (an aggregate of 60 milliseconds) during the remainder of the 10 second period. The aggregate duration of control signals will not count quiet periods in between transmissions. Note 3: During the *U-NII Detection Bandwidth* detection test, radar type 0 should be used. For each frequency step the minimum percentage of detection is 90 percent. Measurements are performed with no data traffic.	

Kind of Test Site Shielded room

Test Setup

<Setup for Master with injection at the Master>

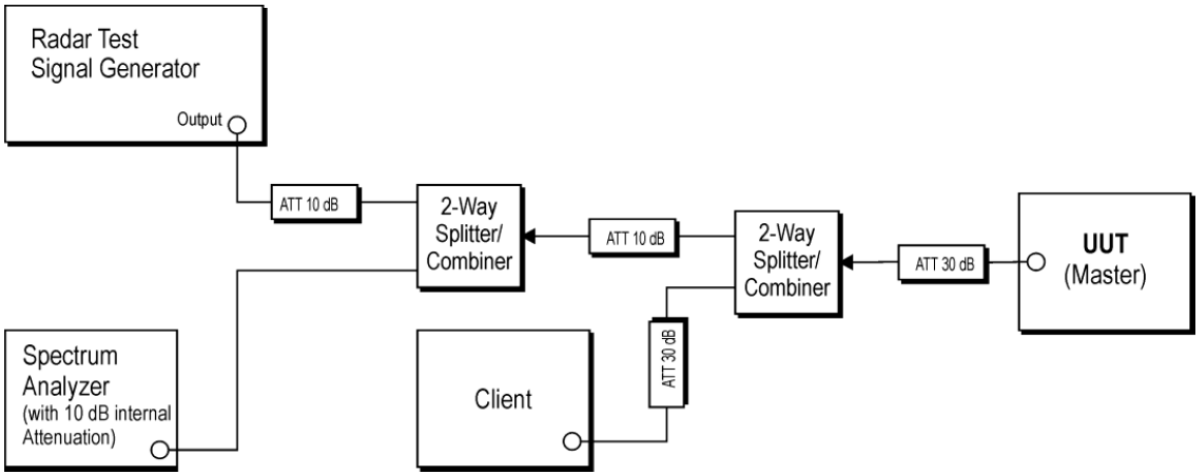

<Setup for Client with injection at the Master>

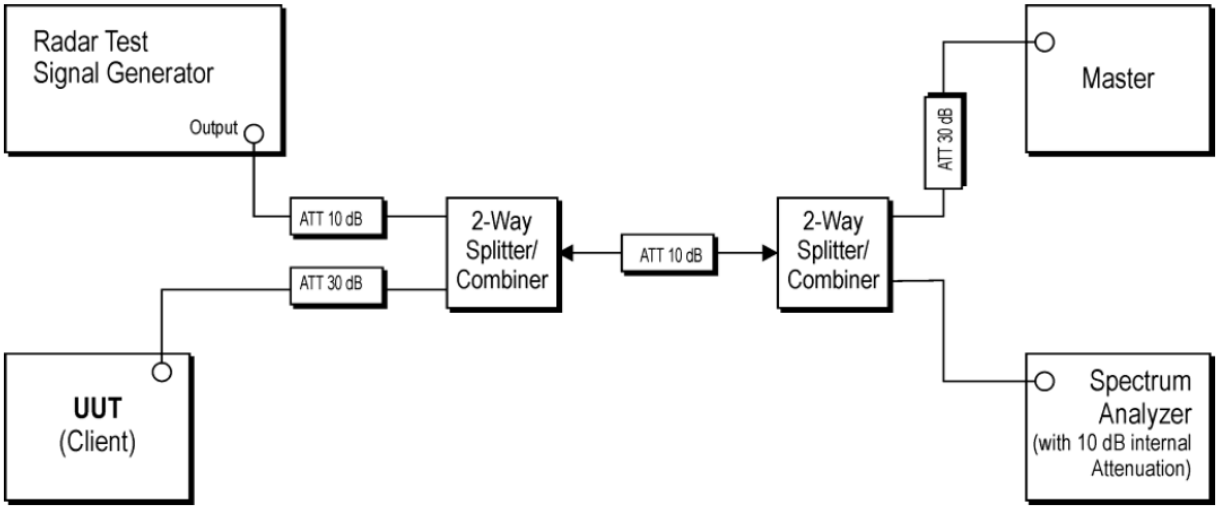

<Setup for Client with injection at the Client>

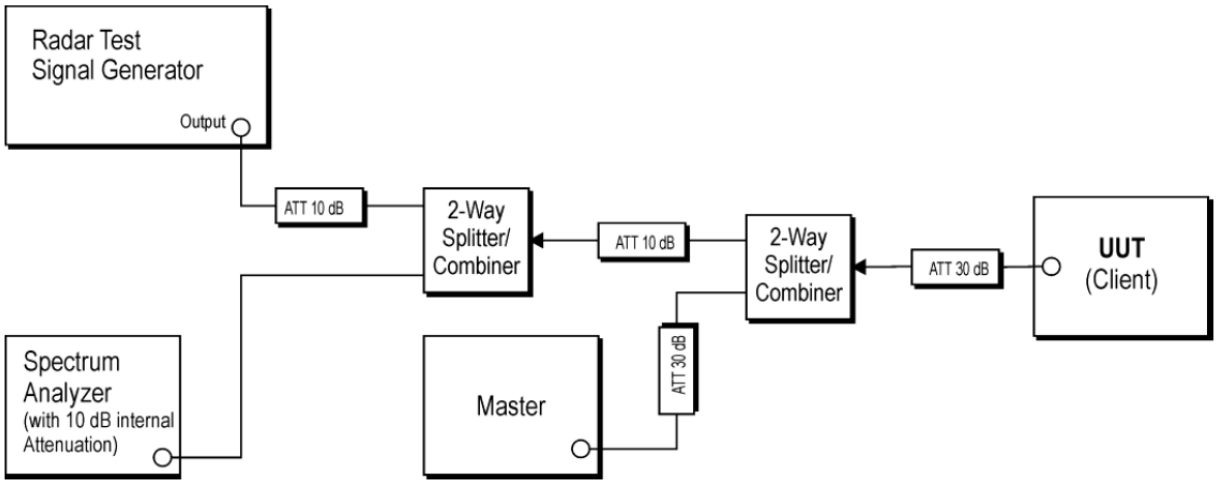

Test Instruments

Kind of Equipment	Manufacturer	Type	S/N	Calibration Date	Calibration Due Date	Test Date	
						From	Until
Spectrum Analyzer	Keysight	N9000B	MY62361339	2023/2/11	2024/2/10	2023/10/30	2023/10/30
EXG Vector Signal Generator	Keysight	N5172B	MY61253270	2022/12/6	2023/12/5	2023/10/30	2023/10/30

Requirement

Requirement	Operational Mode	
	Master Device or Client with Radar Detection	Client Without Radar Detection
DFS Detection Threshold	Yes	Not required
Channel Closing Transmission Time	Yes	Yes
Channel Move Time	Yes	Yes
U-NII Detection Bandwidth	Yes	Not required

Additional requirements for devices with multiple bandwidth modes	Master Device or Client with Radar Detection	Client Without Radar Detection
U-NII Detection Bandwidth and Statistical Performance Check	All BW modes must be tested	Not required
Channel Move Time and Channel Closing Transmission Time	Test using widest BW mode available	Test using the widest BW mode available for the link
All other tests	Any single BW mode	Not required
Note: Frequencies selected for statistical performance check (Section 7.8.4) should include several frequencies within the radar detection bandwidth and frequencies near the edge of the radar detection bandwidth. For 802.11 devices it is suggested to select frequencies in each of the bonded 20 MHz channels and the channel center frequency.		

Test Results

<802.11ac VHT80>

Non-occupancy period

Channel (MHz)	Limit (minute)	Result
5530	30	Pass

Band 3

Channel Moving Time

Channel (MHz)	Channel Move Time (s)	Limit (s)	Result
5530	0.552	10	Pass

Channel Closing Transmission Time

Channel (MHz)	Channel Closing Transmission Time (ms)	Limit (ms)	Result
5530	0.052	60	Pass

Channel Moving Time & Closing Transmission Time	In 500ms
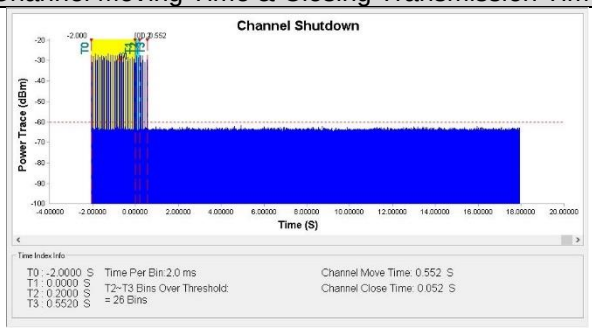	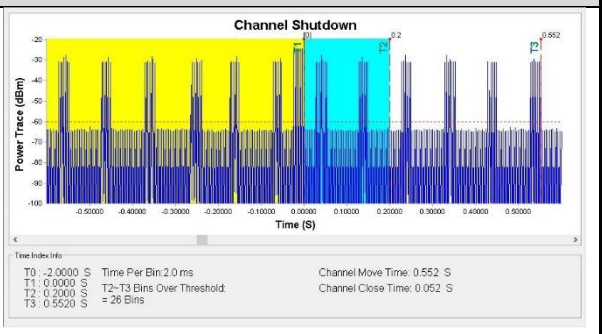

Radar Level

Band 3-R0

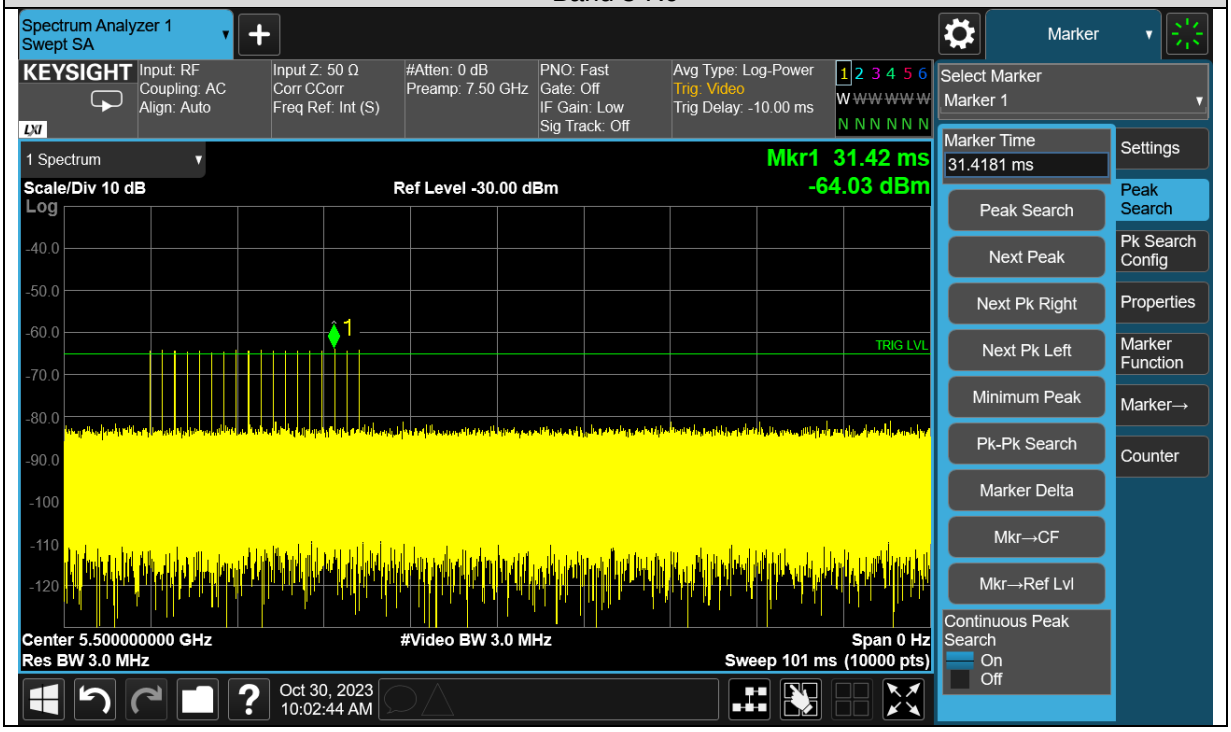

5.2 Mains Emission

5.2.1 Mains Conducted Emission

Limit

Mains Conducted emissions as defined in §15.207 must comply with the mains conducted emission limits.

Kind of Test Site Shielded room

Test Setup

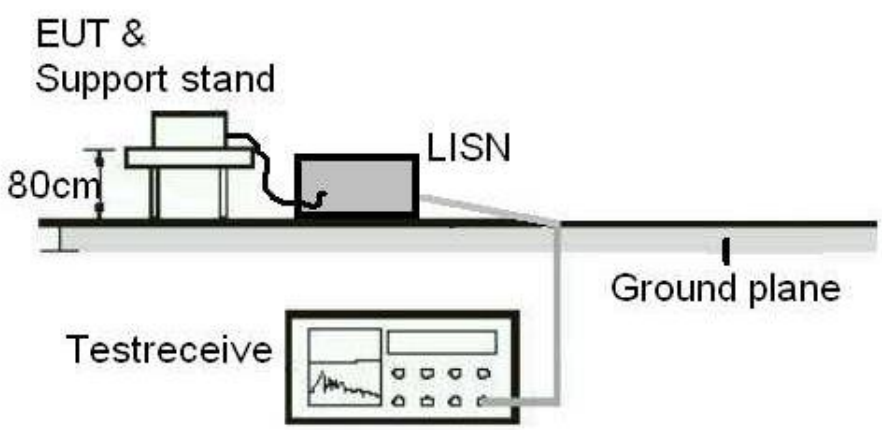

Test Instruments

Test Date: 2023/11/1

Kind of Equipment	Manufacturer	Type	S/N	Calibration Date	Calibration Due Date
Two-Line V-Network	Rohde & Schwarz	ENV216	101262	2022/12/26	2023/12/25
EMI Test Receiver	R&S	ESCI	101094	2022/11/24	2023/11/23

Test Procedures

a. The EUT was placed 0.4 meters from the conducting wall of the shielded room with EUT being connected to the power mains through a line impedance stabilization network (LISN). Other support units were connected to the power mains through another LISN. The two LISNs provide 50 ohm/50 uH of coupling impedance for the measuring instrument.
b. Both lines of the power mains connected to the EUT were checked for maximum conducted interference.
c. The frequency range from 150 kHz to 30 MHz was searched. Emission levels under (Limit – 20 dB) was not recorded.

Note: The resolution bandwidth and video bandwidth of test receiver is 9 kHz for quasi-peak detection (QP) and average detection (AV) at frequency 0.15 MHz – 30 MHz.

Test Results

Please refer to Appendix B.