TEST REPORT

Product Name	:	**AL HydraJolt 2.0**
Model Number	:	**IMW1202, IMW1202-XXXXXXX(XXXXXXX stands for color code. X=A-Z, or blank)**
FCC ID	:	**SP9-00011HJ2**

Prepared for	:	Kysho Multimedia Ltd.
Address	:	Flat F, 5/F Valiant Industrial Centre, 2-12 Au Pui Wan Street, Fo Tan, Shatin, N.T. Hong Kong
Prepared by	:	EMTEK (DONGGUAN) CO., LTD.
Address	:	-1&2/F.,Building 2, Zone A, Zhongda Marine Biotechnology Research and Development Base, No.9, Xincheng Avenue, Songshanhu High-technology Industrial Development Zone, Dongguan, Guangdong, China TEL: +86-0769-22807078 FAX: +86-0769-22807079

Report Number	:	EDG2401090039E00602R
Date(s) of Tests	:	January 09, 2024 to January 22, 2024
Date of issue	:	January 22, 2024

Table of Contents

1 TEST RESULT CERTIFICATION 3

2 EUT TECHNICAL DESCRIPTION 5

3 SUMMARY OF TEST RESULT 6

4 TEST METHODOLOGY 7

4.1 GENERAL DESCRIPTION OF APPLIED STANDARDS 7
4.2 MEASUREMENT EQUIPMENT USED 7
4.3 DESCRIPTION OF TEST MODES 8

5 FACILITIES AND ACCREDITATIONS 9

5.1 FACILITIES 9
5.2 EQUIPMENT 9
5.3 LABORATORY ACCREDITATIONS AND LISTINGS 9

6 TEST SYSTEM UNCERTAINTY 10

7 SETUP OF EQUIPMENT UNDER TEST 11

7.1 RADIO FREQUENCY TEST SETUP 1 11
7.2 RADIO FREQUENCY TEST SETUP 2 11
7.3 CONDUCTED EMISSION TEST SETUP 14
7.4 BLOCK DIAGRAM CONFIGURATION OF TEST SYSTEM 15
7.5 SUPPORT EQUIPMENT 15

8 TEST REQUIREMENTS 16

8.1 DTS 6DB BANDWIDTH 16
8.2 DTS 99% BANDWIDTH 21
8.3 MAXIMUM PEAK CONDUCTED OUTPUT POWER 25
8.4 MAXIMUM POWER SPECTRAL DENSITY 30
8.5 UNWANTED EMISSIONS IN NON-RESTRICTED FREQUENCY BANDS 34
8.6 RADIATED SPURIOUS EMISSION 48
8.7 CONDUCTED EMISSIONS TEST 57
8.8 ANTENNA APPLICATION 60

1 TEST RESULT CERTIFICATION

Applicant	:	Kysho Multimedia Ltd.
Address	:	Flat F, 5/F Valiant Industrial Centre, 2-12 Au Pui Wan Street, Fo Tan, Shatin, N.T. Hong Kong
Manufacturer	:	Kysho Multimedia Ltd.
Address	:	Flat F, 5/F Valiant Industrial Centre, 2-12 Au Pui Wan Street, Fo Tan, Shatin, N.T. Hong Kong
EUT	:	AL HydraJolt 2.0
Model Name	:	IMW1202, IMW1202-XXXXXXX(XXXXXXX stands for color code. X=A-Z, or blank)
Trademark	:	ALTEC LANSING

Measurement Procedure Used:

APPLICABLE STANDARDS	
STANDARD	**TEST RESULT**
FCC 47 CFR Part 2 , Subpart J FCC 47 CFR Part 15, Subpart C	**PASS**
IC RSS-GEN, Issue 5(04-2018)+A1(03-2019)+A2(02-2021) IC RSS-247 Issue 2(02-2017)	**PASS**

The above equipment was tested by EMTEK(DONGGUAN) CO., LTD. The test data, data evaluation, test procedures, and equipment configurations shown in this report were made in accordance with the procedures given in ANSI C63.10 (2013) and the energy emitted by the sample EUT tested as described in this report is in compliance with the requirements of FCC Rules Part 2, Part 15.247, IC RSS-247 Issue 2 and IC RSS-GEN, Issue 5.

The test results of this report relate only to the tested sample identified in this report.

Date of Test :	January 09, 2024 to January 22, 2024
Prepared by :	Warren Deng Warren Deng /Editor
Reviewer :	Tim Dong Tim Dong/ Supervisor
Approve & Authorized Signer :	Sam Lv / Manager

Modified History

Version	Report No.	Revision Date	Summary
	EDG2401090039E00602R	/	Original Report

2 EUT TECHNICAL DESCRIPTION

Characteristics	Description
Product:	AL HydraJolt 2.0
Model Number:	IMW1202, IMW1202-XXXXXXX(XXXXXXX stands for color code. X=A-Z, or blank) (Note: These models are the same, except for the model names and appearance;IMW1202 was selected for full test.)
Sample number:	1#
Device Type：	Bluetooth V5.0
Data Rate :	1Mbps, 2Mbps
Modulation:	GFSK
Operating Frequency Range:	2402-2480MHz
Number of Channels:	40 Channels
Transmit Power Max:	-0.13 dBm(0.000971 W)
Antenna Type:	PCB Antenna
Antenna Gain:	-0.58 dBi
Power Supply:	DC 5V from USB DC 3.7V from battery
Temperature Range:	-10°C ~ +45°C

Note: for more details, please refer to the User's manual of the EUT.

3 SUMMARY OF TEST RESULT

FCC Part Clause	IC Part Clause	Test Parameter	Verdict	Remark
15.247(a)(2)	RSS-247 5.2(a) RSS-Gen 6.7	Emission Bandwidth	PASS	
15.247(b)(3)	RSS-247 5.4(d) RSS-Gen 6.12	Maximum Peak Conducted Output Power	PASS	
15.247(e)	RSS-247 5.2(b) RSS-Gen 6.12	Maximum Power Spectral Density Level	PASS	
15.247(d)	RSS-247 5.5	Unwanted Emission Into Non-Restricted Frequency Bands	PASS	
15.247(d)	RSS-247 5.5	Unwanted Emission Into Restricted Frequency Bands (conducted)	PASS	
15.247(d) 15.209 15.205	RSS-Gen 8.9 RSS-Gen 8.10 RSS-Gen 6.13 RSS-247 3.3 RSS-247 5.5	Radiated Spurious Emission	PASS	
15.207	RSS-Gen 8.8	Conducted Emission Test	PASS	
15.203 15.247(b)	RSS-Gen 6.8 RSS-247 5.4	Antenna Application	PASS	
NOTE1: N/A (Not Applicable) NOTE2: According to FCC OET KDB 558074, the report use radiated measurements in the restricted frequency bands. In addition, the radiated test is also performed to ensure the emissions emanating from the device cabinet also comply with the applicable limits.				

RELATED SUBMITTAL(S)/GRANT(S):

This submittal(s) (test report) is intended for **FCC ID: SP9-00011HJ2** filing to comply with Section 15.247 of the FCC Part 15, Subpart C Rules.

4 TEST METHODOLOGY

4.1 GENERAL DESCRIPTION OF APPLIED STANDARDS

According to its specifications, the EUT must comply with the requirements of the following standards:
FCC 47 CFR Part 2, Subpart J
FCC 47 CFR Part 15, Subpart C
IC RSS-GEN, Issue 5(04-2018)+A1(03-2019)+A2(02-2021)
IC RSS-247 Issue 2(02-2017)
FCC KDB 558074 D01 15.247 Meas Guidance v05r02

4.2 MEASUREMENT EQUIPMENT USED

Conducted Emission Test Equipment

Equipment	Manufacturer	Model No.	Serial No.	Last Cal.	Cal. Interval
EMI Test Receiver	Rohde&Schwarz	ESCI	100137	2023/5/11	1Year
AMN	Rohde&Schwarz	ENV216	101209	2023/5/11	1Year
AMN	Rohde&Schwarz	ENV216	100017	2023/5/11	1Year
RF Switching Unit	CDS	RSU-M2	38401	2023/5/11	1Year
AMN	Schwarzbeck	NNLK8121	8121-641	2023/5/11	1Year
AMN	Rohde&Schwarz	ESH3-Z6	101101	2023/5/11	1Year
AMN	Rohde&Schwarz	ESH3-Z6	101102	2023/5/11	1Year
Power Splitters & Dividers	Weinschel Associates	WA1506A	A1066	2023/5/11	1Year
Current Probe	FCC	F-52	8377	2023/5/11	1Year
Passive voltage probe	Rohde&Schwarz	ESH2-Z3	100122	2023/5/11	1Year

For Spurious Emissions Test

Equipment	Manufacturer	Model No.	Serial No.	Last Cal.	Cal. Interval
EMI Test Receiver	Rohde&Schwarz	ESCI	101415	2023/5/11	1Year
Bi-log Hybrid Antenna	Schwarzbeck	VULB9163	141	2023/5/15	1Year
Pre-Amplifie	HP	8447F	OPTH64	2023/5/11	1 Year
Signal Analyzer	R&S	FSV30	103039	2023/5/11	1 Year
Horn Antenna	Schwarzbeck	BBHA9120D	1272	2023/5/15	1Year
Horn Antenna	Schwarzbeck	BBHA9170	9170-567	2023/5/15	1Year
Pre-Amplifie	LUNAR EM	PM1-18-40	J10100000081	2023/5/11	1Year
Loop antenna	Schwarzbeck	FMZB1519	1519-012	2023/5/15	1Year

For other test items:

Equipment	Manufacturer	Model No.	Serial No.	Last Cal.	Cal. Interval
Wireless Connectivity Tester	R&S	CMW270	102543	2023/05/11	1Year
Automatic Control Unit	Tonscend	JS0806-2	21I8060480	2023/05/11	1Year
Signal Analyzer	KEYSIGHT	N9010B	MY60242456	2023/05/11	1Year
Analog Signal Generator	KEYSIGHT	N5173B	MY61252625	2023/05/11	1Year
UP/DOWN-Converter	R&S	CMW-Z800A	100274	2023/05/11	1Year
Vector Signal Generator	KEYSIGHT	N5182B	MY61252674	2023/05/11	1Year
Frequency Extender	KEYSIGHT	N5182BX07	MY59362541	2023/05/11	1Year
Temperature&Humidity test chamber	ESPEC	EL-02KA	12107166	2023/05/11	1 Year

4.3 DESCRIPTION OF TEST MODES

The EUT has been tested under its typical operating condition.
The EUT configuration for testing is installed on RF field strength measurement to meet the Commissions requirement and operating in a manner which intends to maximize its emission characteristics in a continuous normal application.

The Transmitter was operated in the normal operating mode. The TX frequency was fixed which was for the purpose of the measurements.

Test of channel included the lowest and middle and highest frequency to perform the test, then record on this report.

Those data rates (Bluetooth DTS :1Mbps, 2Mbps) were used for all test.

Pre-defined engineering program for regulatory testing used to control the EUT for staying in continuous transmitting and receiving mode is programmed.

Frequency and Channel list for Bluetooth DTS:

Channel	Frequency (MHz)	Channel	Frequency (MHz)	Channel	Frequency (MHz)
0	2402	19	2440	…	…
1	2404	20	2442	37	2476
2	2406	21	2444	38	2478
…	…	…	…	39	2480
Note: fc=2402MHz+k×2MHz k=1 to 39					

Test Frequency and channel for Bluetooth DTS:

Lowest Frequency		Middle Frequency		Highest Frequency	
Channel	Frequency (MHz)	Channel	Frequency (MHz)	Channel	Frequency (MHz)
0	2402	19	2440	39	2480

5 FACILITIES AND ACCREDITATIONS

5.1 FACILITIES

All measurement facilities used to collect the measurement data are located at:

EMTEK (DONGGUAN) CO., LTD.
-1&2/F.,Building 2, Zone A, Zhongda Marine Biotechnology Research and Development Base, No.9, Xincheng Avenue, Songshanhu High-technology Industrial Development Zone, Dongguan, Guangdong, China
The sites are constructed in conformance with the requirements of ANSI C63.7, ANSI C63.4 and CISPR Publication 22.

5.2 EQUIPMENT

Radiated emissions are measured with one or more of the following types of linearly polarized antennas: tuned dipole, biconical, log periodic, bi-log, and/or ridged waveguide, horn. Spectrum analyzers with preselectors and quasi-peak detectors are used to perform radiated measurements.

Conducted emissions are measured with Line Impedance Stabilization Networks and EMI Test Receivers.

Calibrated wideband preamplifiers, coaxial cables, and coaxial attenuators are also used for making measurements.

All receiving equipment conforms to CISPR Publication 16-1, “Radio Interference Measuring Apparatus and Measurement Methods.”

5.3 LABORATORY ACCREDITATIONS AND LISTINGS

Site Description

EMC Lab.	:	**Accredited by CNAS** The Laboratory has been assessed and proved to be in compliance with CNAS-CL01:2018 The Certificate Registration Number is L3150 **Accredited by FCC** Designation Number: CN1300 Test Firm Registration Number: 945551 **Accredited by A2LA** The Certificate Registration Number is 4321.02 **Accredited by Industry Canada** The Certificate Registration Number is CN0113
Name of Firm	:	EMTEK (DONGGUAN) CO., LTD.
Site Location	:	-1&2/F.,Building 2, Zone A, Zhongda Marine Biotechnology Research and Development Base, No.9, Xincheng Avenue, Songshanhu High-technology Industrial Development Zone, Dongguan, Guangdong, China

6 TEST SYSTEM UNCERTAINTY

The following measurement uncertainty levels have been estimated for tests performed on the apparatus:

Test Parameter	Measurement Uncertainty
Radio Frequency	±1x10^-5
Maximum Peak Output Power Test	±1.0dB
Conducted Emissions Test	±2.0dB
Radiated Emission Test	±2.0dB
Power Density	±2.0dB
Occupied Bandwidth Test	±1.0dB
Band Edge Test	±3dB
All emission, radiated	±3dB
Antenna Port Emission	±3dB
Temperature	±0.5℃
Humidity	±3%

Measurement Uncertainty for a level of Confidence of 95%

7 SETUP OF EQUIPMENT UNDER TEST

7.1 RADIO FREQUENCY TEST SETUP 1

The Bluetooth component's antenna ports(s) of the EUT are connected to the measurement instrument per an appropriate attenuator. The EUT is controlled by PC/software to emit the specified signals for the purpose of measurements.

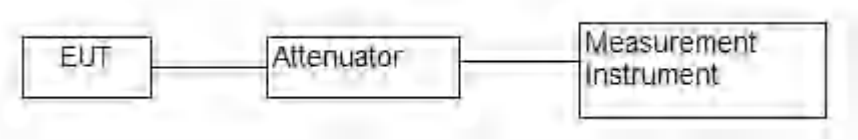

7.2 RADIO FREQUENCY TEST SETUP 2

The test site semi-anechoic chamber has met the requirement of NSA tolerance 4 dB according to the standards: ANSI C63.10. The test distance is 3m.The setup is according to the requirements in Section 13.1.4.1 of ANSI C63.10-2013 and CAN/CSA-CEI/IEC CISPR 22.
The maximal emission value is acquired by adjusting the antenna height, polarisation and turntable azimuth. Normally, the height range of antenna is 1 m to 4 m, the azimuth range of turntable is 0° to 360°, and the receive antenna has two polarizations Vertical (V) and Horizontal (H).

Below 30MHz：
The EUT is placed on a turntable 0.8 meters above the ground in the chamber, 3 meter away from the antenna (loop antenna). The Antenna should be positioned with its plane vertical at the specified distance from the EUT and rotated about its vertical axis for maximum response at each azimuth about the EUT. The center of the loop shall be 1 m above the ground. For certain applications, the loop antenna plane may also need to be positioned horizontally at the specified distance from the EUT.

Above 30MHz：
The EUT is placed on a turntable 0.8 meters above the ground in the chamber, 3 meter away from the antenna. The maximal emission value is acquired by adjusting the antenna height, polarisation and turntable azimuth. Normally, the height range of antenna is 1 m to 4 m, the azimuth range of turntable is 0° to 360°, and the receive antenna has two polarizations Vertical (V) and Horizontal (H).

Above 1GHz:
The EUT is placed on a turntable 1.5 meters above the ground in the chamber, 3 meter away from the antenna. The maximal emission value is acquired by adjusting the antenna height, polarisation and turntable azimuth. Normally, the height range of antenna is 1 m to 4 m, the azimuth range of turntable is 0° to 360°, and the receive antenna has two polarizations Vertical (V) and Horizontal (H).

Measurements shall be taken, using the following steps, at a test site that has been validated using the procedures of ANSI C63.4 or the latest CISPR 16-1-4 for measurements above 1 GHz, so as to simulate a near free-space environment (see RSS-Gen for applicable versions of ANSI and CISPR standards).
(1) Line the ground plane with absorbers between the transmitter and the receive antenna to minimize reflections. The absorbers used should have a minimum-rated attenuation of 20 dB through the measurement frequency range of interest. The absorbers shall be positioned to replicate the layout used when compliance with the applicable acceptability criterion was achieved, as set forth in the aforementioned standards on site validation.
(2) Set the height of the receive antenna to 1.5 m. The receive antenna must be one that was designed and fabricated to operate over the entire frequency range of interest, for example, an appropriate standard gain horn.
(3) The distance between the receive antenna and the radiating source shall be sufficient in order to ensure far-field conditions.
(4) Mount the transmitter at a height of 1.5 m.
(5) Configure the device under test (DUT) to produce the maximum power spectral density as measured while assessing compliance with Section 6.2.2 (i.e. channel frequency, modulation type and data rate). If the DUT is equipped with a detachable antenna and the antenna is intended for remote installation (i.e.

tower-mounted), the DUT may be substituted with a suitable signal generator. The level and frequency settings on the generator shall be set so as to reproduce the maximum power spectral density, measured within a 1 MHz bandwidth, obtained while assessing compliance to Section 6.2.2.
(6) Position the transmitter or the radiating antenna so that elevation pattern measurements can be taken.
(7) Find the 0° reference point in the horizontal plane.
(8) Care should be taken when positioning the receive antenna to avoid cross-polarization. Antennas of known mounting polarization should be assessed with the receive antenna oriented in the same polarity. If the polarization of the transmit antenna is unknown or the transmit antenna can be mounted in either polarization, e.i.r.p. measurements should be performed to find which
mounting polarity provides the highest e.i.r.p. value. Testing shall be carried out with the receive antenna and the DUT mounted in each polarity.
(9) The emission shall be centred on the display of the spectrum analyzer with the following settings:
i. If the power spectral density of the DUT was assessed with a peak detector and the antenna cannot be detached from the DUT, the spectrum analyzer shall be set to a peak detector with a resolution bandwidth and video bandwidth of 1 MHz.
ii. If the power spectral density of the DUT was assessed using a sample detector with power averaging and the antenna cannot be detached from the DUT, the spectrum analyzer shall be set to a sample detector, configured to produce 100 power averages and set with a resolution bandwidth, as well as a video bandwidth of 1 MHz.
iii. If the antenna can be detached from the DUT, a continuous wave (CW) signal equal to that of the power spectral density measurement may be used, the spectrum analyzer shall be set to peak detector with a resolution bandwidth and video bandwidth of 1 MHz.

(10) Rotate the turntable 360° recording the field strength at each step. Throughout the main beam of the antenna, the step size shall be kept to a maximum of 1°.
Once outside the main beam of the antenna, the maximum step size shall be as follows, when compared to the requirements of Section 6.2.2:
i. Between 0° and 8°, maximum step size of 2°;
ii. Between 8° and 40°, maximum step size of 4°;
iii. Between 40° and 45°, maximum step size of 1°;
iv. Between 45° and 90°, maximum step size of 5°.
Once the mask reaches 90°, the mask will be inverted and the step size will follow in the same manner as above.
For the purpose of this procedure, the main beam of the antenna is defined as the 3 dB beamwidth.
(11) Convert the measured field strength values in terms of e.i.r.p. density (dBW/1 MHz) using the following equation:

$$\text{e.i.r.p density(dBW/MHz)}=10\log((E*r)^2/30)$$

E = field strength in V/m
r = measurement distance in metres

(12) Plot the results against the emission mask with reference to the horizontal plane.
(13) Using the plot, the 0° can be rotated to determine the worst-case installation tilt angle.
(14) Testing shall be performed using the highest gain antenna for every antenna type, if applicable.
(15) Antenna type(s), antenna model number(s), and worst-case tilt angle(s) necessary to remain compliant with the elevation mask requirement set forth in Section 6.2.2(3) of RSS-247 shall be clearly indicated in the user manual.
The following figure is an example of a polar elevation mask measured using the Method 1 reference to dBµV/m at 3 m.

(a) Radiated Emission Test Set-Up, Frequency Below 30MHz

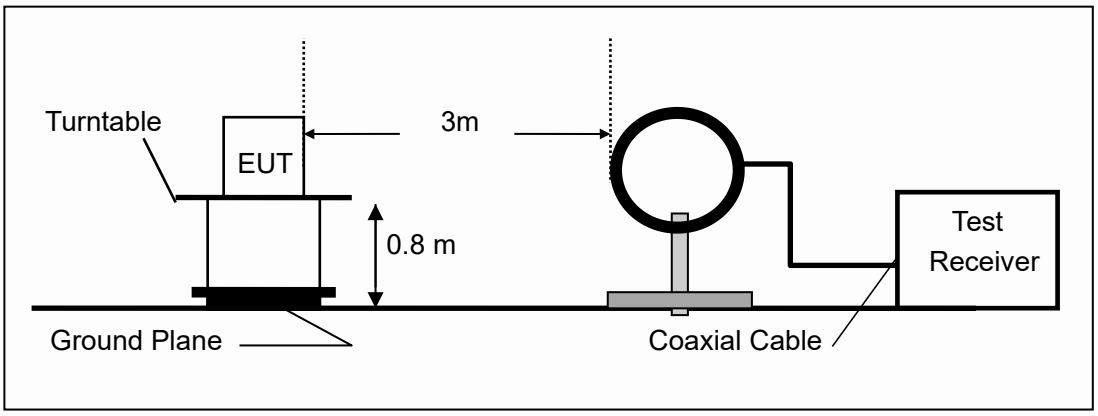

(b) Radiated Emission Test Set-Up, Frequency Below 1000MHz

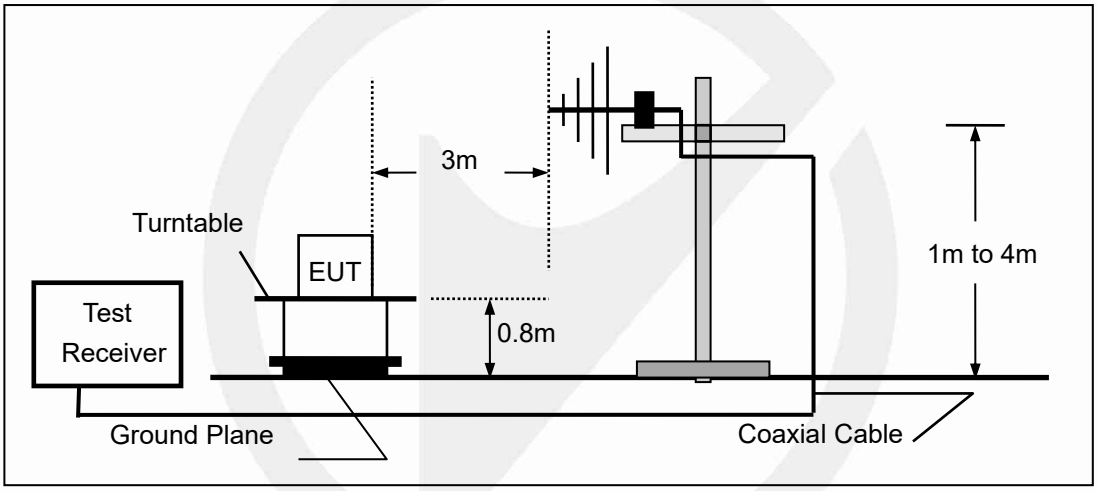

(c) Radiated Emission Test Set-Up, Frequency above 1000MHz

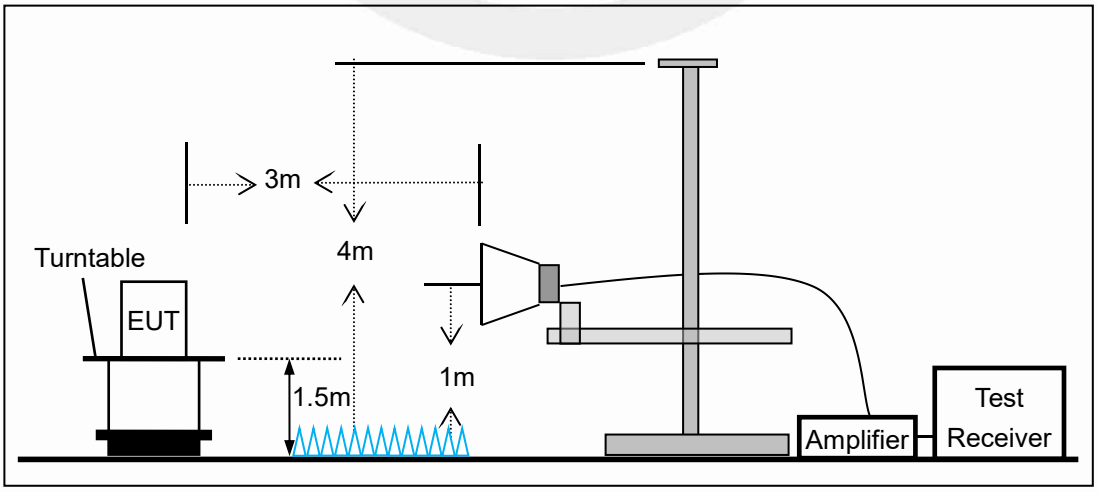

7.3 CONDUCTED EMISSION TEST SETUP

The mains cable of the EUT (maybe per AC/DC Adapter) must be connected to LISN. The LISN shall be placed 0.8 m from the boundary of EUT and bonded to a ground reference plane for LISN mounted on top of the ground reference plane. This distance is between the closest points of the LISN and the EUT. All other units of the EUT and associated equipment shall be at least 0.8m from the LISN.
Ground connections, where required for safety purposes, shall be connected to the reference ground point of the LISN and, where not otherwise provided or specified by the manufacturer, shall be of same length as the mains cable and run parallel to the mains connection at a separation distance of not more than 0.8 m.
According to the requirements in Section 13.1.4.1 of ANSI C63.10-2013 Conducted emissions from the EUT measured in the frequency range between 0.15 MHz and 30 MHz using CISPR Quasi-Peak and average detector mode.

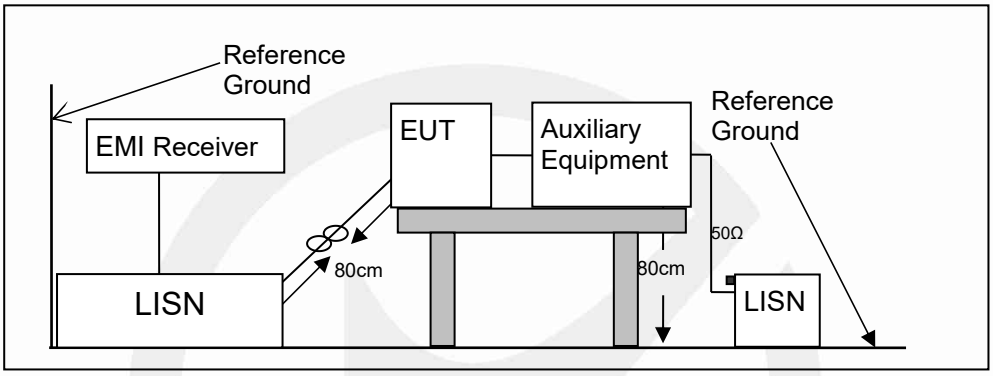

7.4 BLOCK DIAGRAM CONFIGURATION OF TEST SYSTEM

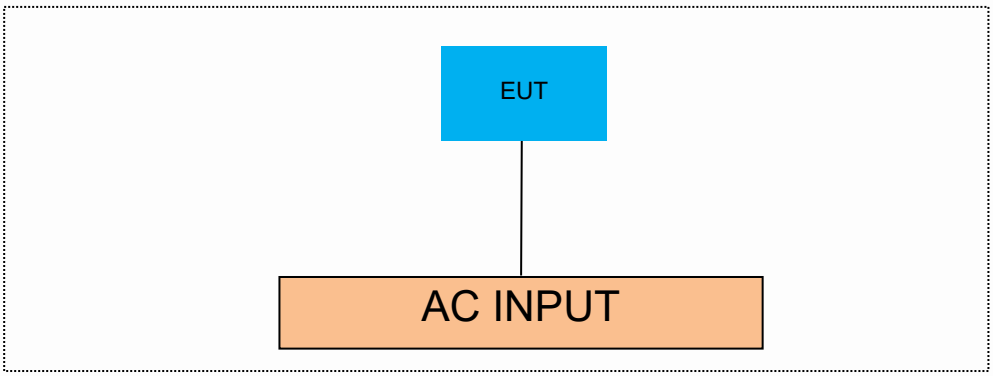

7.5 SUPPORT EQUIPMENT

EUT Cable List and Details			
Description	Manufacturer	Model	Serial Number
/	/	/	/

EUT Cable List and Details			
Cable Description	Length (m)	Shielded/Unshielded	With / Without Ferrite
/	/	/	/

Auxiliary Cable List and Details			
Cable Description	Length (m)	Shielded/Unshielded	With / Without Ferrite
/	/	/	/
/	/	/	/

Auxiliary Equipment List and Details			
Description	Manufacturer	Model	Serial Number
Notebook	Lenovo	E46L	11S168003748Z0LR06E0HG
Adapter	Apple	/	/

Notes:

1. *All the equipment/cables were placed in the worst-case configuration to maximize the emission during the test.*
2. *Grounding was established in accordance with the manufacturer's requirements and conditions for the intended use.*

8 TEST REQUIREMENTS

8.1 DTS 6DB BANDWIDTH

8.1.1 Applicable Standard

According to FCC Part 15.247(a)(2) and KDB 558074 D01 15.247 Meas Guidance v05r02
According to RSS-247 5.2(a)

8.1.2 Conformance Limit

The minimum -6 dB bandwidth shall be at least 500 kHz.

8.1.3 Test Configuration

Test according to clause 7.1 radio frequency test setup 1

8.1.4 Test Procedure

The EUT was operating in Bluetooth mode and controlled its channel. Printed out the test result from the spectrum by hard copy function.
The RF output of EUT was connected to the spectrum analyzer by RF cable and attenuator. The path loss was compensated to the results for each measurement.
Set to the maximum power setting and enable the EUT transmit continuously
Set RBW = 100 kHz.
Set the video bandwidth (VBW) =300 kHz.
Set Span=2 times OBW
Set Detector = Peak.
Set Trace mode = max hold.
Set Sweep = auto couple.
Allow the trace to stabilize.
Measure the maximum width of the emission that is constrained by the frequencies associated with the two outermost amplitude points (upper and lower frequencies) that are attenuated by 6 dB relative to the maximum level measured in the fundamental emission.
Measure and record the results in the test report.

Test Results

Temperature:	25˚C
Relative Humidity:	45%
ATM Pressure:	1011 mbar

Note: N/A

TestMode	Antenna	Frequency[MHz]	DTS BW [MHz]	FL[MHz]	FH[MHz]	Limit[MHz]	Verdict
BLE_1M	Ant1	2402	0.656	2401.676	2402.332	0.5	PASS
BLE_1M	Ant1	2440	0.656	2439.676	2440.332	0.5	PASS
BLE_1M	Ant1	2480	0.652	2479.680	2480.332	0.5	PASS
BLE_2M	Ant1	2402	1.144	2401.424	2402.568	0.5	PASS
BLE_2M	Ant1	2440	1.140	2439.428	2440.568	0.5	PASS
BLE_2M	Ant1	2480	1.144	2479.424	2480.568	0.5	PASS

BLE_1M-Ant1-2402-PASS

BLE_1M-Ant1-2440-PASS

BLE_1M-Ant1-2480-PASS

BLE_2M-Ant1-2402-PASS

BLE_2M-Ant1-2440-PASS

BLE_2M-Ant1-2480-PASS

8.2 DTS 99% BANDWIDTH

8.2.1 Applicable Standard

According to RSS-Gen 6.7 and KDB 558074 D01 DTS Meas Guidance v05r02

8.2.2 Test Configuration

Test according to clause 7.1 radio frequency test setup 1

8.2.3 Test Procedure

The EUT was operating in Bluetooth mode and controlled its channel. Printed out the test result from the spectrum by hard copy function.
The RF output of EUT was connected to the spectrum analyzer by RF cable and attenuator. The path loss was compensated to the results for each measurement.
Set to the maximum power setting and enable the EUT transmit continuously
Set RBW = 1%-5% OBW(43 KHz).
Set the video bandwidth (VBW) =130 kHz.
Set Span=4 MHz
Set Detector = Peak.
Set Trace mode = max hold.
Set Sweep = auto couple.
Allow the trace to stabilize.
Use the 99 % power bandwidth function of the instrument
Measure the maximum width of the emission.
Measure and record the results in the test report.

8.2.4 Test Results

Temperature:	25˚C
Relative Humidity:	45%
ATM Pressure:	1011 mbar

Note: N/A

TestMode	Antenna	Frequency[MHz]	OCB [MHz]	FL[MHz]	FH[MHz]	Limit[MHz]	Verdict
BLE_1M	Ant1	2402	1.0329	2401.4979	2402.5308	---	---
BLE_1M	Ant1	2440	1.0277	2439.5009	2440.5286	---	---
BLE_1M	Ant1	2480	1.0294	2479.4996	2480.5290	---	---
BLE_2M	Ant1	2402	2.0377	2401.0024	2403.0401	---	---
BLE_2M	Ant1	2440	2.0331	2439.0082	2441.0413	---	---
BLE_2M	Ant1	2480	2.0333	2479.0074	2481.0407	---	---

BLE_1M-Ant1-2402

BLE_1M-Ant1-2440

BLE_1M-Ant1-2480

BLE_2M-Ant1-2402

BLE_2M-Ant1-2440

BLE_2M-Ant1-2480

8.3 MAXIMUM PEAK CONDUCTED OUTPUT POWER

8.3.1 Applicable Standard

According to FCC Part 15.247(b)(3) and KDB 558074 D01 15.247 Meas Guidance v05r02
According to RSS-247 5.4(d) and RSS-Gen 6.12

8.3.2 Conformance Limit

The maximum peak conducted output power of the intentional radiator for systems using digital modulation in the 2400 - 2483.5 MHz bands shall not exceed: 1 Watt (30 dBm).

8.3.3 Test Configuration

Test according to clause 7.1 radio frequency test setup 1

8.3.4 Test Procedure

As an alternative to a peak power measurement, compliance with the one Watt limit can be based on a measurement of the maximum conducted output power. For smart system, Maximum Conducted Output Power is defined as the total transmit power delivered to all antennas and antenna elements averaged across all symbols in the signaling alphabet when the transmitter is operating at its maximum power control level. Power must be summed across all antennas and antenna elements. If multiple modes of operation are possible (e.g., alternative modulation methods), the maximum conducted output power is the highest total transmit power occurring in any mode.
Set the RBW ≧DTS bandwidth(about 2MHz).
Set VBW =3*RBW(about 6MHz)
Set the span ≧3*RBW
Set Sweep time = auto couple.
Set Detector = peak.
Set Trace mode = max hold.
Allow trace to fully stabilize. Use peak marker function to determine the peak amplitude level.

Conducted output power limit specified in paragraph (b) of this section is based on the use of antennas with directional gains that do not exceed 6 dBi. If transmitting antennas of directional gain greater than 6 dBi are used, the conducted output power from the intentional radiator shall be reduced below the stated values in paragraphs (b)(3) of this section, as appropriate, by the amount in dB that the directional gain of the antenna exceeds 6 dBi.

8.3.5 Test Results

Temperature:	25 ˚C
Relative Humidity:	45%
ATM Pressure:	1011 mbar

Note: N/A

TestMode	Antenna	Frequency[MHz]	Conducted Peak Powert[dBm]	Conducted Limit[dBm]	EIRP[dBm]	EIRP Limit[dBm]	Verdict
BLE_1M	Ant1	2402	-1.81	≤30	-2.39	≤36	PASS
BLE_1M	Ant1	2440	-0.43	≤30	-1.01	≤36	PASS
BLE_1M	Ant1	2480	-0.17	≤30	-0.75	≤36	PASS
BLE_2M	Ant1	2402	-1.76	≤30	-2.34	≤36	PASS
BLE_2M	Ant1	2440	-0.42	≤30	-1.00	≤36	PASS
BLE_2M	Ant1	2480	-0.13	≤30	-0.71	≤36	PASS

BLE_1M-Ant1-2402-PASS

BLE_1M-Ant1-2440-PASS

BLE_1M-Ant1-2480-PASS

BLE_2M-Ant1-2402-PASS

BLE_2M-Ant1-2440-PASS

BLE_2M-Ant1-2480-PASS

8.4 MAXIMUM POWER SPECTRAL DENSITY

8.4.1 Applicable Standard

According to FCC Part 15.247(e) and KDB 558074 D01 15.247 Meas Guidance v05r02
According to RSS-247 5.2(b) and RSS-Gen 6.12

8.4.2 Conformance Limit

The transmitter power spectral density conducted from the transmitter to the antenna shall not be greater than 8 dBm in any 3 kHz band during any time interval of continuous transmission.

8.4.3 Test Configuration

Test according to clause 7.1 radio frequency test setup 1

8.4.4 Test Procedure

This procedure shall be used if maximum peak conducted output power was used to demonstrate compliance
The transmitter output (antenna port) was connected to the spectrum analyzer
Set analyzer center frequency to DTS channel center frequency.
Set the span to 1.5 times the DTS bandwidth.
Set the RBW to: 3 kHz
Set the VBW to: 10 kHz.
Set Detector = peak.
Set Sweep time = auto couple.
Set Trace mode = max hold.
Allow trace to fully stabilize.
Use the peak marker function to determine the maximum amplitude level within the RBW.

8.4.5 Test Results

Temperature:	25 ˚C
Relative Humidity:	45%
ATM Pressure:	1011 mbar

Note: N/A

TestMode	Antenna	Frequency[MHz]	Result[dBm/3kHz]	Limit[dBm/3kHz]	Verdict
BLE_1M	Ant1	2402	-12.10	≤8.00	PASS
BLE_1M	Ant1	2440	-10.64	≤8.00	PASS
BLE_1M	Ant1	2480	-10.36	≤8.00	PASS
BLE_2M	Ant1	2402	-12.59	≤8.00	PASS
BLE_2M	Ant1	2440	-11.09	≤8.00	PASS
BLE_2M	Ant1	2480	-10.78	≤8.00	PASS

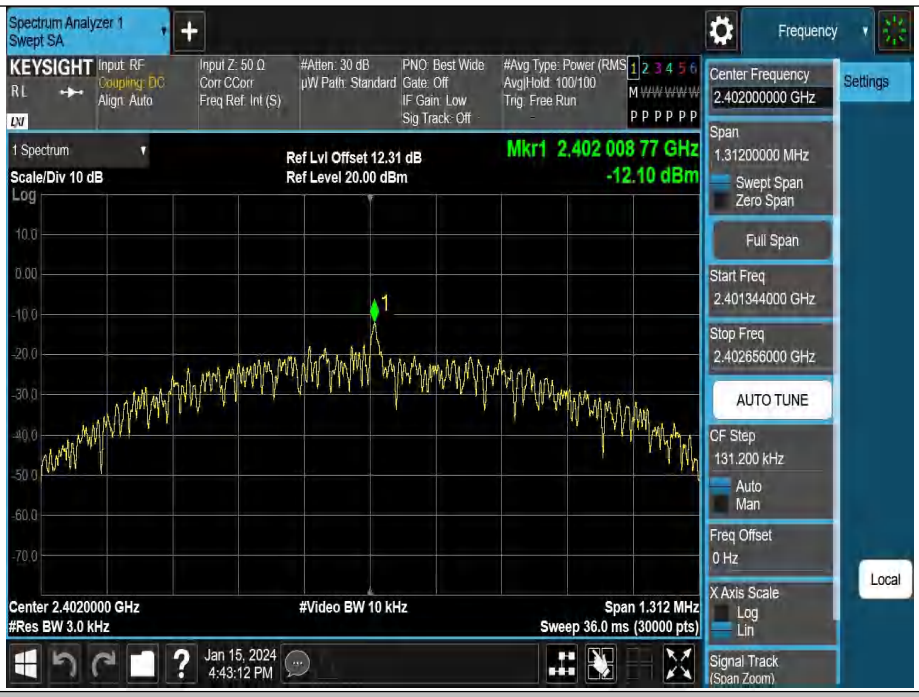

BLE_1M-Ant1-2402-PASS

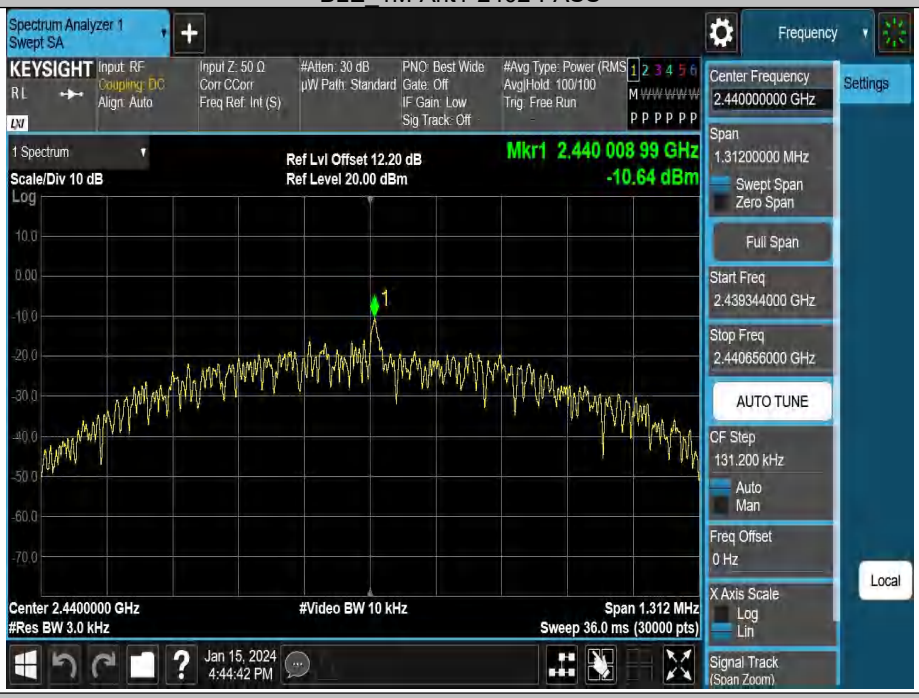

BLE_1M-Ant1-2440-PASS

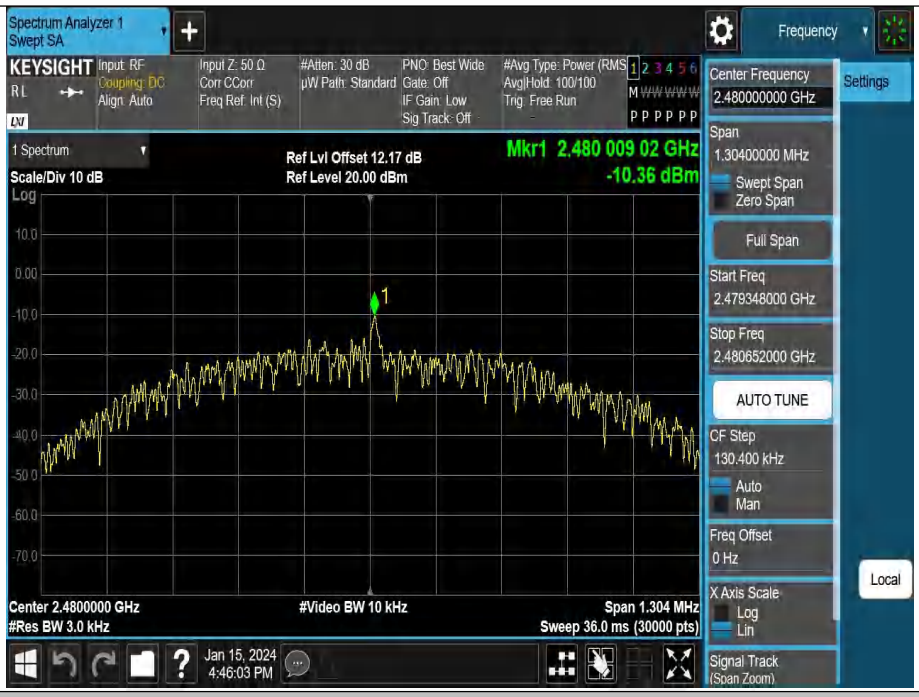

BLE_1M-Ant1-2480-PASS

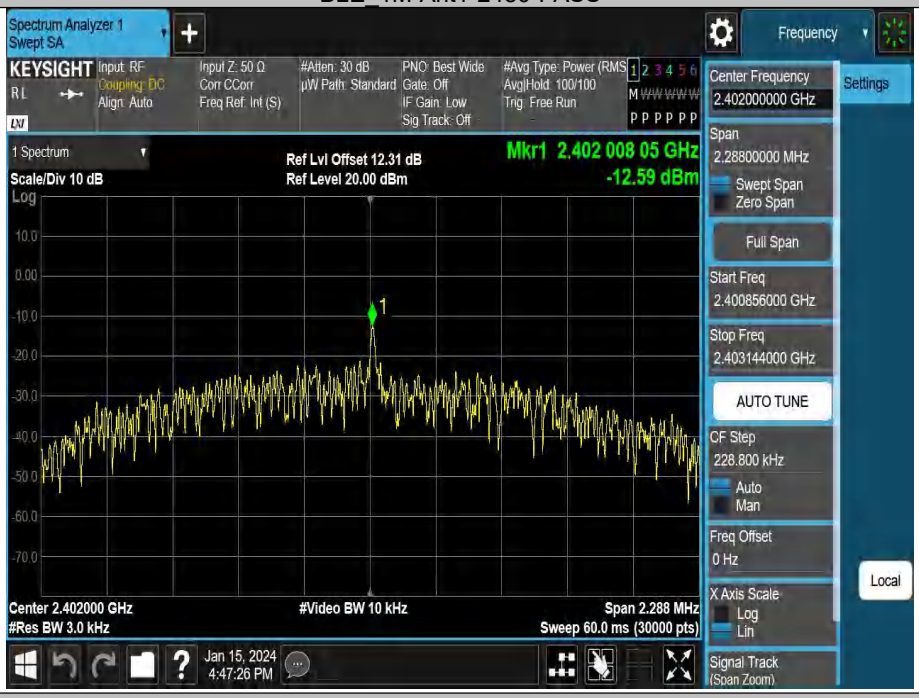

BLE_2M-Ant1-2402-PASS

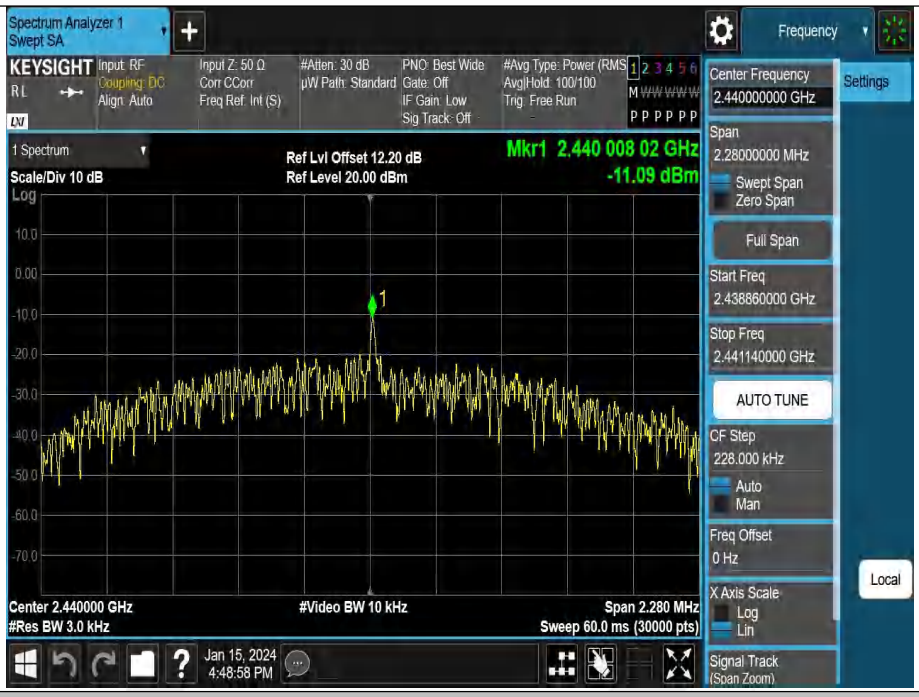

BLE_2M-Ant1-2440-PASS

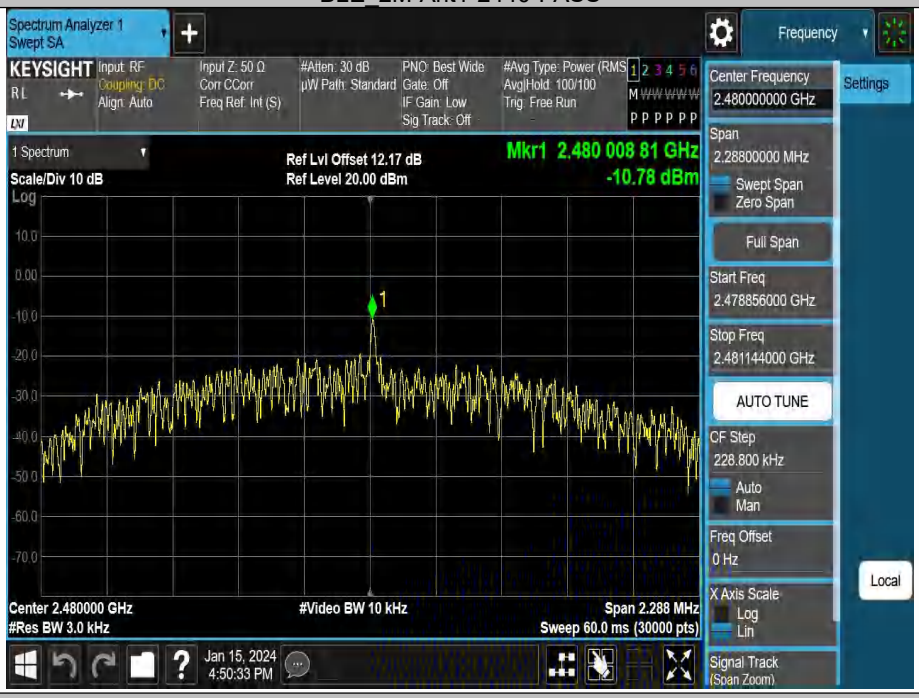

BLE_2M-Ant1-2480-PASS

8.5 UNWANTED EMISSIONS IN NON-RESTRICTED FREQUENCY BANDS

8.5.1 Applicable Standard

According to FCC Part 15.247(d) and KDB 558074 D01 15.247 Meas Guidance v05r02
According to RSS-247 5.5

8.5.2 Conformance Limit

In any 100 kHz bandwidth outside the frequency band in which the spread spectrum or digitally modulated intentional radiator is operating, the radio frequency power that is produced by the intentional radiator shall be at least 20 dB below that in the 100 kHz bandwidth within the band that contains the highest level of the desired power, based on either an RF conducted or a radiated measurement, provided the transmitter demonstrates compliance with the peak conducted power limits. If the transmitter complies with the conducted power limits based on the use of RMS averaging over a time interval, as permitted under paragraph (b)(3) of this section, the attenuation required under this paragraph shall be 30 dB instead of 20 dB.

8.5.3 Test Configuration

Test according to clause 7.1 radio frequency test setup 1

8.5.4 Test Procedure

The transmitter output (antenna port) was connected to the spectrum analyzer

- **Reference level measurement**

Establish a reference level by using the following procedure:
Set instrument center frequency to DTS channel center frequency.
Set the span to = 1.5 times the DTS bandwidth.
Set the RBW = 100 kHz.
Set the VBW ≥ 3 x RBW.
Set Detector = peak.
Set Sweep time = auto couple.
Set Trace mode = max hold.
Allow trace to fully stabilize.
Use the peak marker function to determine the maximum PSD level.
Note that the channel found to contain the maximum PSD level can be used to establish the reference level.

- **Band-edge measurement**

Use the following spectrum analyzer settings:
Span = wide enough to capture the peak level of the emission operating on the channel closest to the band-edge, as well as any modulation products which fall outside of the authorized band of operation
Set RBW ≥ 1% of the span=100kHz Set VBW ≥ 3 x RBW
Set Sweep = auto Set Detector function = peak Set Trace = max hold
Allow the trace to stabilize. Set the marker on the emission at the bandedge, or on the highest modulation product outside of the band, if this level is greater than that at the bandedge. Enable the marker-delta function, then use the marker-to-peak function to move the marker to the peak of the in-band emission. The marker-delta value now displayed must comply with the limit specified in this Section.

- **Emission level measurement**

Set the center frequency and span to encompass frequency range to be measured.
Set the RBW = 100 kHz.
Set the VBW =300 kHz.
Set Detector = peak
Sweep time = auto couple.
Trace mode = max hold.
Allow trace to fully stabilize.

Use the peak marker function to determine the maximum amplitude level.
Ensure that the amplitude of all unwanted emissions outside of the authorized frequency band (excluding restricted frequency bands) are attenuated by at least the minimum requirements . Report the three highest emissions relative to the limit.

8.5.5 Test Results

Temperature:	25 ˚C
Relative Humidity:	45%
ATM Pressure:	1011 mbar

Note: N/A

Band edge

TestMode	Antenna	ChName	Frequency[MHz]	RefLevel[dBm]	Result[dBm]	Limit[dBm]	Verdict
BLE_1M	Ant1	Low	2402	-2.29	-46.83	≤-22.29	PASS
BLE_1M	Ant1	High	2480	-0.57	-48.04	≤-20.57	PASS
BLE_2M	Ant1	Low	2402	-2.27	-34.91	≤-22.27	PASS
BLE_2M	Ant1	High	2480	-0.53	-48.03	≤-20.53	PASS

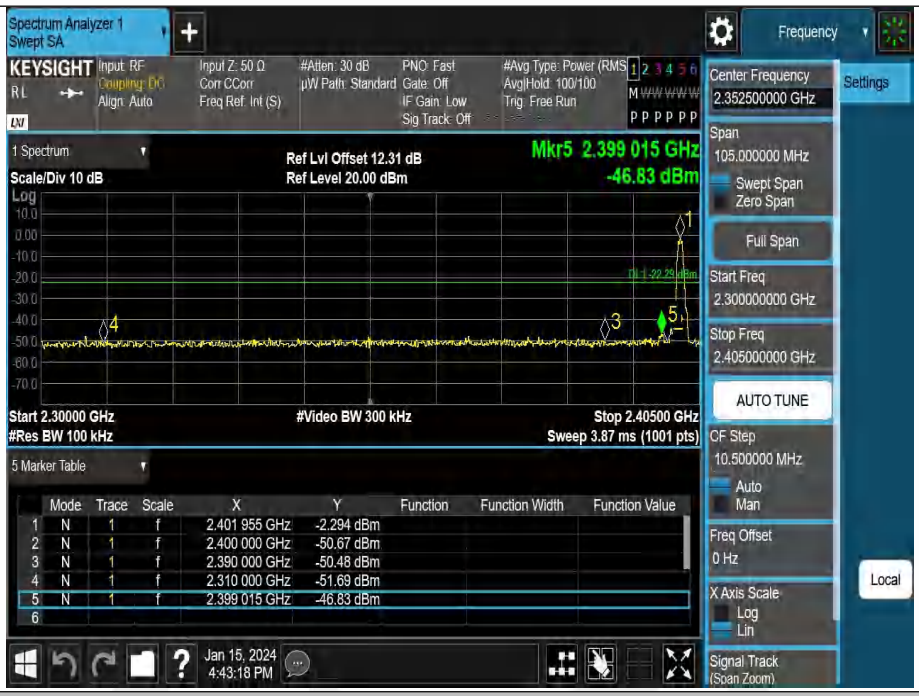

BLE_1M-Ant1-2402-PASS

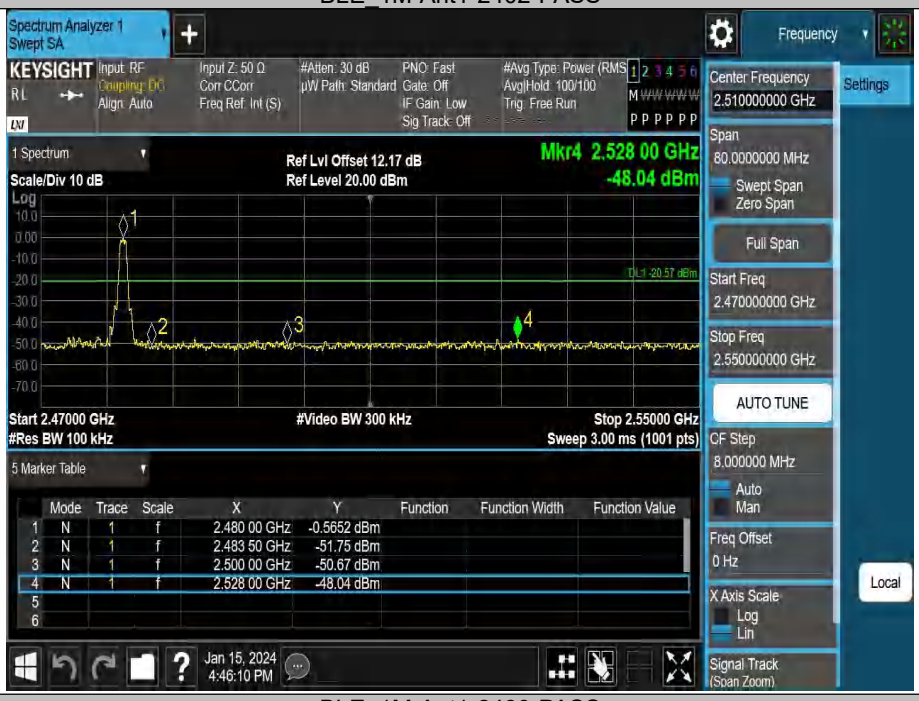

BLE_1M-Ant1-2480-PASS

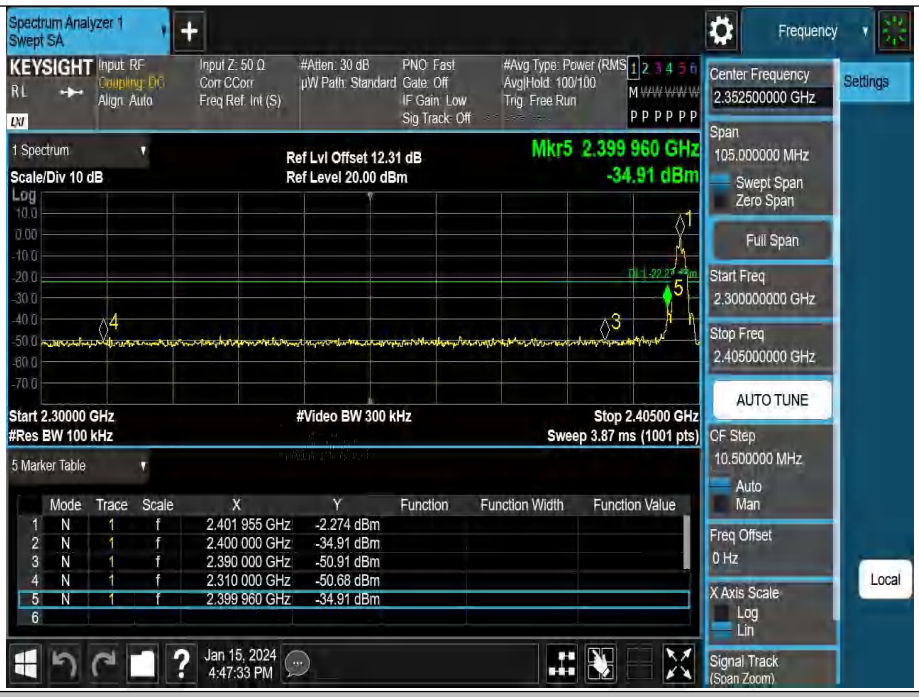

BLE_2M-Ant1-2402-PASS

BLE_2M-Ant1-2480-PASS

Conducted Spurious Emission

TestMode	Antenna	Frequency[MHz]	FreqRange [MHz]	RefLevel [dBm]	Result[dBm]	Limit[dBm]	Verdict
BLE_1M	Ant1	2402	0~Reference	-2.30	-2.30	---	PASS
BLE_1M	Ant1	2402	30~1000	-2.30	-60.7	≤-22.3	PASS
BLE_1M	Ant1	2402	1000~26500	-2.30	-44.48	≤-22.3	PASS
BLE_1M	Ant1	2440	0~Reference	-0.79	-0.79	---	PASS
BLE_1M	Ant1	2440	30~1000	-0.79	-60.83	≤-20.79	PASS
BLE_1M	Ant1	2440	1000~26500	-0.79	-43.13	≤-20.79	PASS
BLE_1M	Ant1	2480	0~Reference	-1.31	-1.31	---	PASS
BLE_1M	Ant1	2480	30~1000	-1.31	-61.18	≤-21.31	PASS
BLE_1M	Ant1	2480	1000~26500	-1.31	-43.96	≤-21.31	PASS
BLE_2M	Ant1	2402	0~Reference	-4.70	-4.70	---	PASS
BLE_2M	Ant1	2402	30~1000	-4.70	-60.96	≤-24.7	PASS
BLE_2M	Ant1	2402	1000~26500	-4.70	-44.09	≤-24.7	PASS
BLE_2M	Ant1	2440	0~Reference	-3.58	-3.58	---	PASS
BLE_2M	Ant1	2440	30~1000	-3.58	-61.08	≤-23.58	PASS
BLE_2M	Ant1	2440	1000~26500	-3.58	-42.48	≤-23.58	PASS
BLE_2M	Ant1	2480	0~Reference	-0.55	-0.55	---	PASS
BLE_2M	Ant1	2480	30~1000	-0.55	-61.24	≤-20.55	PASS
BLE_2M	Ant1	2480	1000~26500	-0.55	-44.96	≤-20.55	PASS

BLE_1M-Ant1-2402-0~Reference-PASS

BLE_1M-Ant1-2402-30~1000-PASS

BLE_1M-Ant1-2402-1000~26500-PASS

BLE_1M-Ant1-2440-0~Reference-PASS

BLE_1M-Ant1-2440-30~1000-PASS

BLE_1M-Ant1-2440-1000~26500-PASS

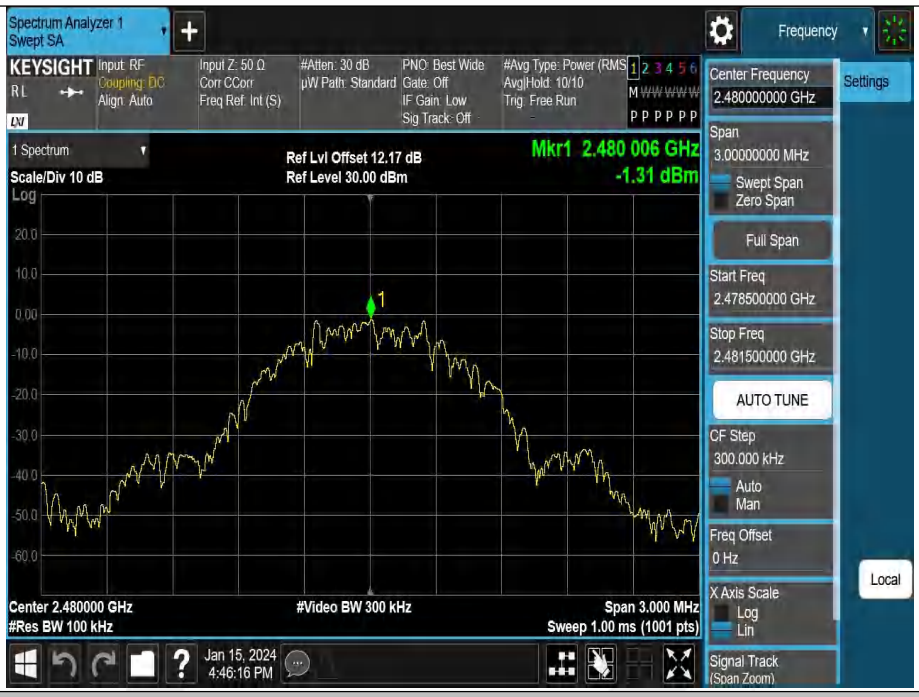

BLE_1M-Ant1-2480-0~Reference-PASS

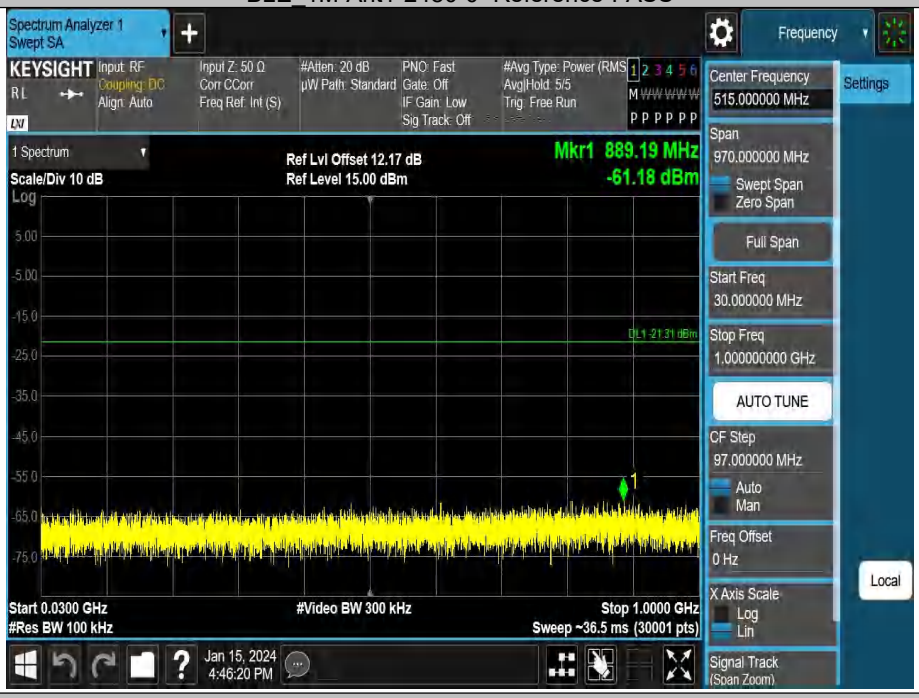

BLE_1M-Ant1-2480-30~1000-PASS

BLE_1M-Ant1-2480-1000~26500-PASS

BLE_2M-Ant1-2402-0~Reference-PASS

BLE_2M-Ant1-2402-30~1000-PASS

BLE_2M-Ant1-2402-1000~26500-PASS

BLE_2M-Ant1-2440-0~Reference-PASS

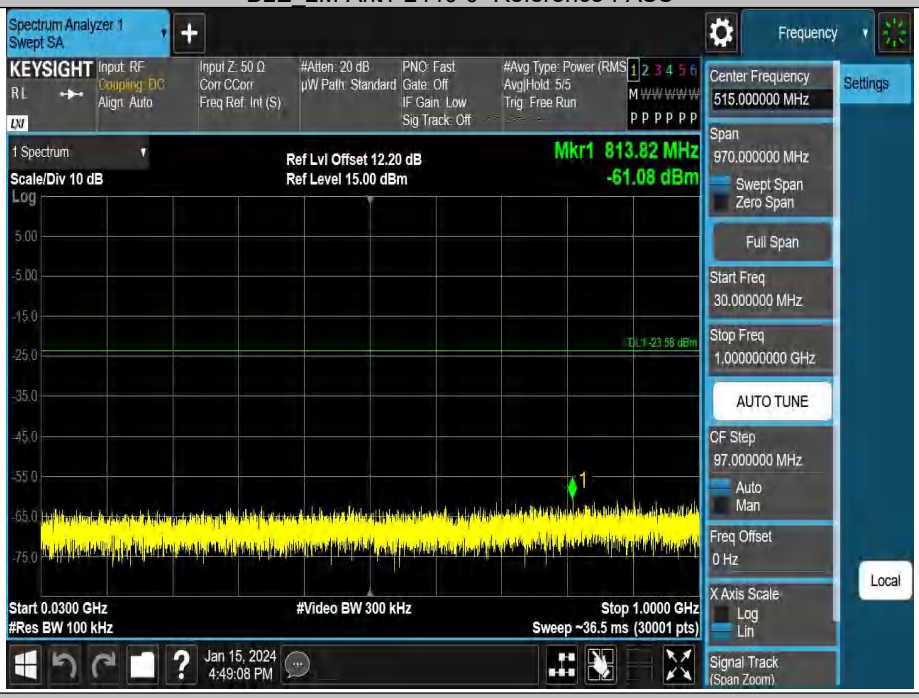

BLE_2M-Ant1-2440-30~1000-PASS

BLE_2M-Ant1-2440-1000~26500-PASS

BLE_2M-Ant1-2480-0~Reference-PASS

BLE_2M-Ant1-2480-30~1000-PASS

BLE_2M-Ant1-2480-1000~26500-PASS

8.6 RADIATED SPURIOUS EMISSION

8.6.1 Applicable Standard

According to FCC Part 15.247(d), 15.205, 15.209 and KDB 558074 D01 15.247 Meas Guidance v05r02
According to IC RSS-Gen and RSS-247

8.6.2 Conformance Limit

According to FCC Part 15.247(d): radiated emissions which fall in the restricted bands, as defined in §15.205(a), must also comply with the radiated emission limits specified in §15.209(a) (see §15.205(c)).
According to FCC Part15.205, Restricted bands

MHz	MHz	MHz	GHz
0.090-0.110	16.42-16.423	399.9-410	4.5-5.15
10.495-0.505	16.69475-16.69525	608-614	5.35-5.46
2.1735-2.1905	16.80425-16.80475	960-1240	7.25-7.75
4.125-4.128	25.5-25.67	1300-1427	8.025-8.5
4.17725-4.17775	37.5-38.25	1435-1626.5	9.0-9.2
4.20725-4.20775	73-74.6	1645.5-1646.5	9.3-9.5
6.215-6.218	74.8-75.2	1660-1710	10.6-12.7
6.26775-6.26825	123-138	2200-2300	14.47-14.5
8.291-8.294	149.9-150.05	2310-2390	15.35-16.2
8.362-8.366	156.52475-156.52525	2483.5-2500	17.7-21.4
8.37625-8.38675	156.7-156.9	2690-2900	22.01-23.12
8.41425-8.41475	162.0125-167.17	3260-3267	23.6-24.0
12.29-12.293	167.72-173.2	3332-3339	31.2-31.8
12.51975-12.52025	240-285	3345.8-3358	36.43-36.5
12.57675-12.57725	322-335.4	3600-4400	(2)
13.36-13.41			

According to FCC Part15.205, the level of any transmitter spurious emission in Restricted bands shall not exceed the level of the emission specified in the following table

Restricted Frequency(MHz)	Field Strength (μV/m)	Field Strength (dBμV/m)	Measurement Distance
0.009-0.490	2400/F(KHz)	20 log (uV/m)	300
0.490-1.705	24000/F(KHz)	20 log (uV/m)	30
1.705-30	30	29.5	30
30-88	100	40	3
88-216	150	43.5	3
216-960	200	46	3
Above 960	500	54	3

8.6.3 Test Configuration

Test according to clause 7.2 radio frequency test setup 2

8.6.4 Test Procedure

This test is required for any spurious emission that falls in a Restricted Band, as defined in Section 15.205. It must be performed with the highest gain of each type of antenna proposed for use with the EUT. Use the following spectrum analyzer settings:
The EUT was placed on a turn table which is 0.8m above ground plane.
Maximum procedure was performed on the highest emissions to ensure EUT compliance.
Span = wide enough to fully capture the emission being measured
RBW = 1 MHz for f ≥ 1 GHz(1GHz to 25GHz), 100 kHz for f < 1 GHz(30MHz to 1GHz)

VBW ≥ RBW
Sweep = auto
Detector function = peak
Trace = max hold
Follow the guidelines in ANSI C63.10-2013 with respect to maximizing the emission by rotating the EUT, measuring the emission while the EUT is situated in three orthogonal planes (if appropriate), adjusting the measurement antenna height and polarization, etc. A pre-amp and a high pass filter are required for this test, in order to provide the measuring system with sufficient sensitivity. Allow the trace to stabilize. The peak reading of the emission, after being corrected by the antenna factor, cable loss, pre-amp gain, etc., is the peak field strength, which must comply with the limit specified in Section 15.35(b). Submit this data.
Now set the VBW to 10 Hz, while maintaining all of the other instrument settings. This peak level, once corrected, must comply with the limit specified in Section 15.209. If the dwell time per channel of the hopping signal is less than 100 ms, then the reading obtained with the 10 Hz VBW may be further adjusted by a "duty cycle correction factor", derived from 20log(dwell time/100 ms), in an effort to demonstrate compliance with the 15.209 limit. Submit this data.
Repeat above procedures until all frequency measured was complete.

8.6.5 Test Results

Temperature:	22° C
Relative Humidity:	43%
ATM Pressure:	1011 mbar

■ Spurious Emission below 30MHz (9KHz to 30MHz)

Freq. (MHz)	Ant.Pol.	Emission Level(dBuV/m)		Limit 3m(dBuV/m)		Over(dB)	
	H/V	PK	AV	PK	AV	PK	AV
--	--	--	--	--	--	--	--

Note: the amplitude of spurious emission that is attenuated by more than 20dB below the permissible limit has no need to be reported.
Distance extrapolation factor =40log(Specific distance/ test distance)(dB);
Limit line=Specific limits(dBuV) + distance extrapolation factor

■ Spurious Emission Above 1GHz (1GHz to 25GHz)

All the antenna(Antenna 1) and modes(BLE_1M, BLE_2M) mode have been tested, and the worst(Antenna 1, BLE_1M) result recorded was report as below:

Test mode: BLE_1M Frequency: Channel 0: 2402MHz

Freq. (MHz)	Ant.Pol.	Emission Level(dBuV/m)		Limit 3m(dBuV/m)		Over(dB)	
	H/V	PK	AV	PK	AV	PK	AV
7829.86	V	55.78	41.83	74.00	54.00	-18.22	-12.17
10247.54	V	56.08	42.22	74.00	54.00	-17.92	-11.78
12509.32	V	55.65	41.80	74.00	54.00	-18.35	-12.20
7737.62	H	57.20	43.36	74.00	54.00	-16.80	-10.64
9852.54	H	57.51	43.60	74.00	54.00	-16.49	-10.40
12319.15	H	56.59	42.72	74.00	54.00	-17.41	-11.28

Test mode: BLE_1M Frequency: Channel 19: 2440MHz

Freq. (MHz)	Ant.Pol.	Emission Level(dBuV/m)		Limit 3m(dBuV/m)		Over(dB)	
	H/V	PK	AV	PK	AV	PK	AV
7809.52	V	56.71	42.84	74.00	54.00	-17.29	-11.16
9901.07	V	57.36	43.50	74.00	54.00	-16.64	-10.50
12397.73	V	56.01	42.14	74.00	54.00	-17.99	-11.86
8317.43	H	57.13	43.22	74.00	54.00	-16.87	-10.78
10670.72	H	56.98	43.11	74.00	54.00	-17.02	-10.89
12455.20	H	57.35	43.53	74.00	54.00	-16.65	-10.47

Test mode: BLE_1M Frequency: Channel 39: 2480MHz

Freq. (MHz)	Ant.Pol.	Emission Level(dBuV/m)		Limit 3m(dBuV/m)		Over(dB)	
	H/V	PK	AV	PK	AV	PK	AV
7786.98	V	56.11	42.24	74.00	54.00	-17.89	-11.76
10822.92	V	56.15	42.31	74.00	54.00	-17.85	-11.69
12883.60	V	56.33	42.42	74.00	54.00	-17.67	-11.58
7760.02	H	56.20	42.32	74.00	54.00	-17.80	-11.68
10816.66	H	56.04	42.17	74.00	54.00	-17.96	-11.83
13973.67	H	56.51	42.62	74.00	54.00	-17.49	-11.38

Note: (1) All Readings are Peak Value (VBW=3MHz) and Average Value (VBW=10Hz).
(2) Emission Level= Reading Level+Correct Factor.
(3) Correct Factor= Ant_F + Cab_L – Preamp
(4) The reading of emissions are attenuated more than 20dB below the permissible limits or the field strength is too small to be measured.

■ Spurious Emission in Restricted Band 2310-2390MHz and 2483.5-2500MHz

All the antenna(Antenna 1) and modes(BLE_1M, BLE_2M) mode have been tested, and the worst(Antenna 1, BLE_1M) result recorded was report as below:

Test mode:	BLE_1M	Frequency:	Channel 0: 2402MHz

Frequency (MHz)	Polarity	PK(dBuV/m) (VBW=3MHz)	Limit 3m (dBuV/m)	AV(dBuV/m) (VBW=10Hz)	Limit 3m (dBuV/m)
2388.71	H	42.60	74.00	29.25	54.00
2386.08	V	42.90	74.00	29.59	54.00

Test mode:	BLE_1M	Frequency:	Channel 39: 2480MHz

Frequency (MHz)	Polarity	PK(dBuV/m) (VBW=3MHz)	Limit 3m (dBuV/m)	AV(dBuV/m) (VBW=10Hz)	Limit 3m (dBuV/m)
2483.50	H	43.25	74.00	29.59	54.00
2483.50	V	43.13	74.00	29.65	54.00

Note:
(1) All Readings are Peak Value (VBW=3MHz) and Average Value (VBW=10Hz).
(2) Emission Level= Reading Level+Correct Factor.
(3) Correct Factor= Ant_F + Cab_L - Preamp
(4) The reading of emissions are attenuated more than 20dB below the permissible limits or the field strength is too small to be measured.

Test Model	Spurious Emission in Restricted Band 2310-2390MHz Channel 0: 2402MHz BLE_1M H

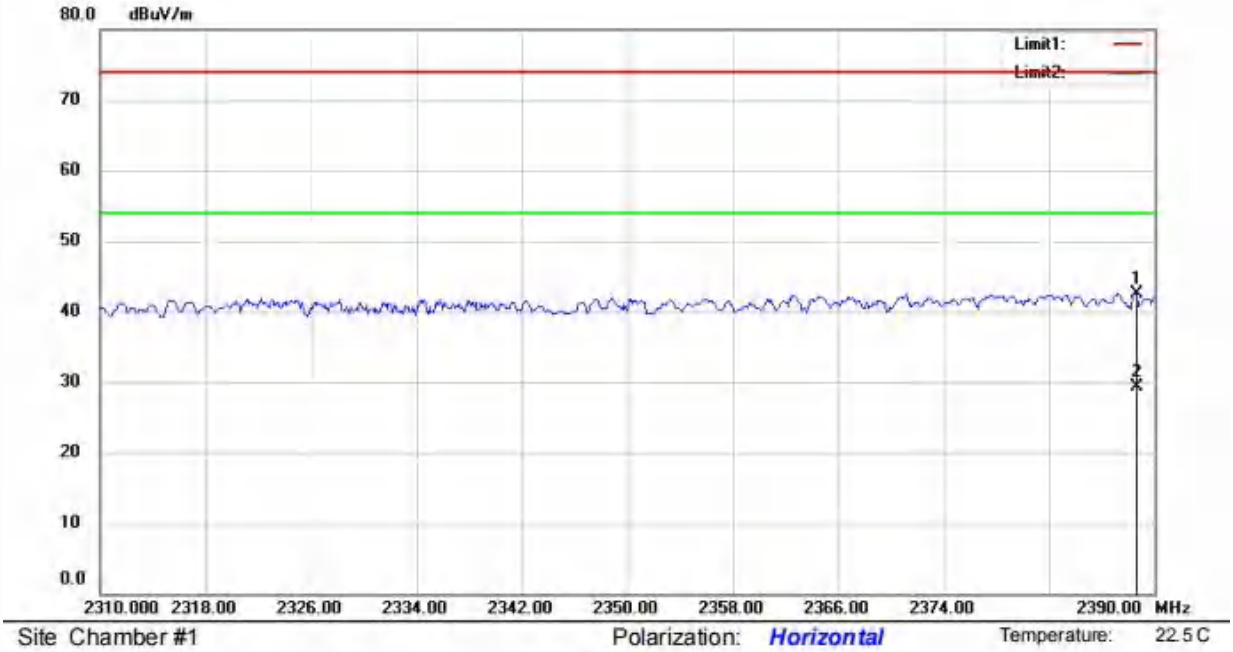

Test Model	Spurious Emission in Restricted Band 2310-2390MHz Channel 0: 2402MHz BLE_1M V

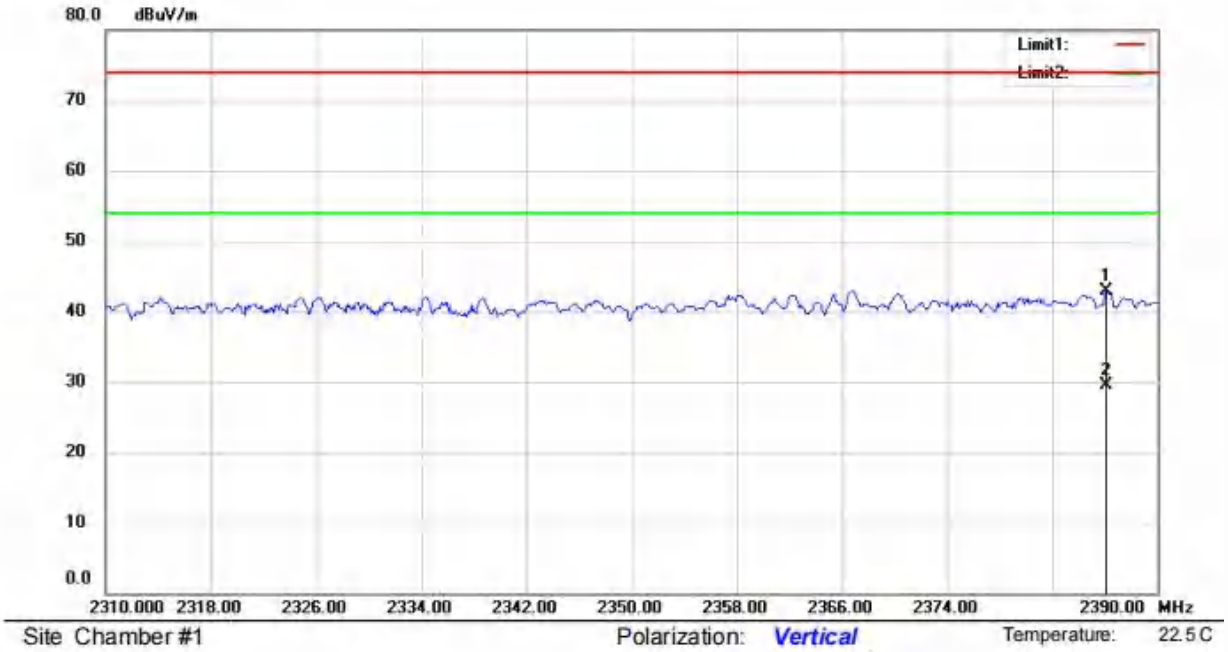

Test Model	Spurious Emission in Restricted Band 2483.5-2500MHz Channel 39: 2480MHz BLE_1M H

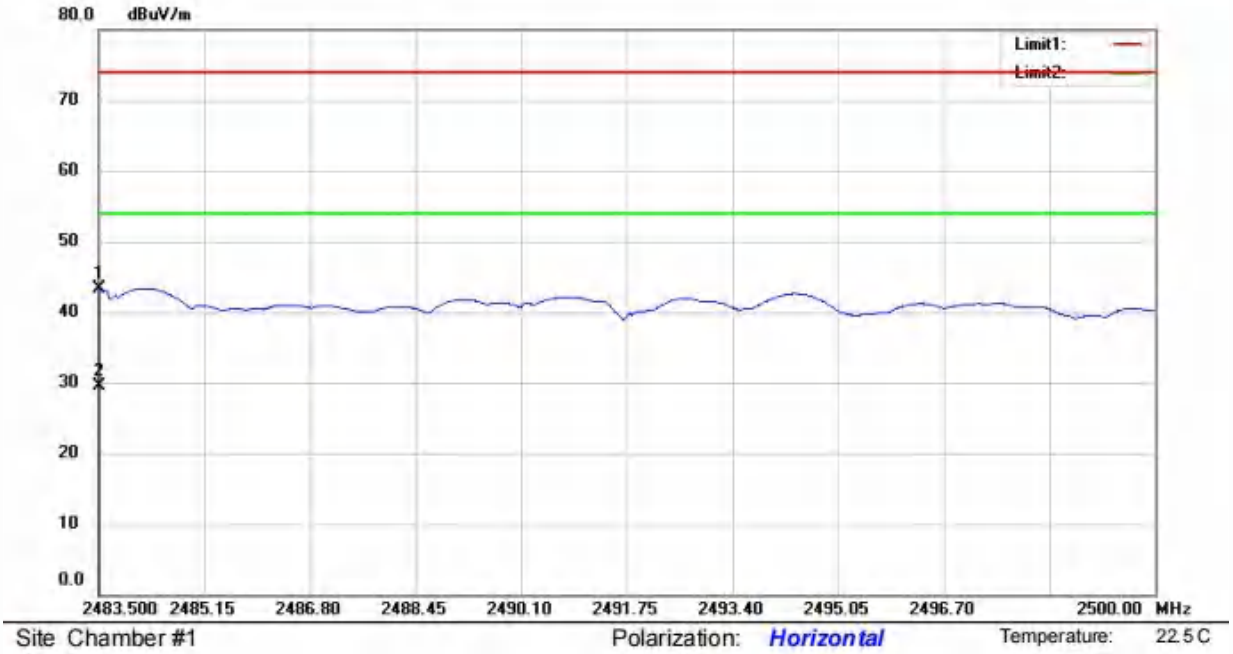

Test Model	Spurious Emission in Restricted Band 2483.5-2500MHz Channel 39: 2480MHz BLE_1M V

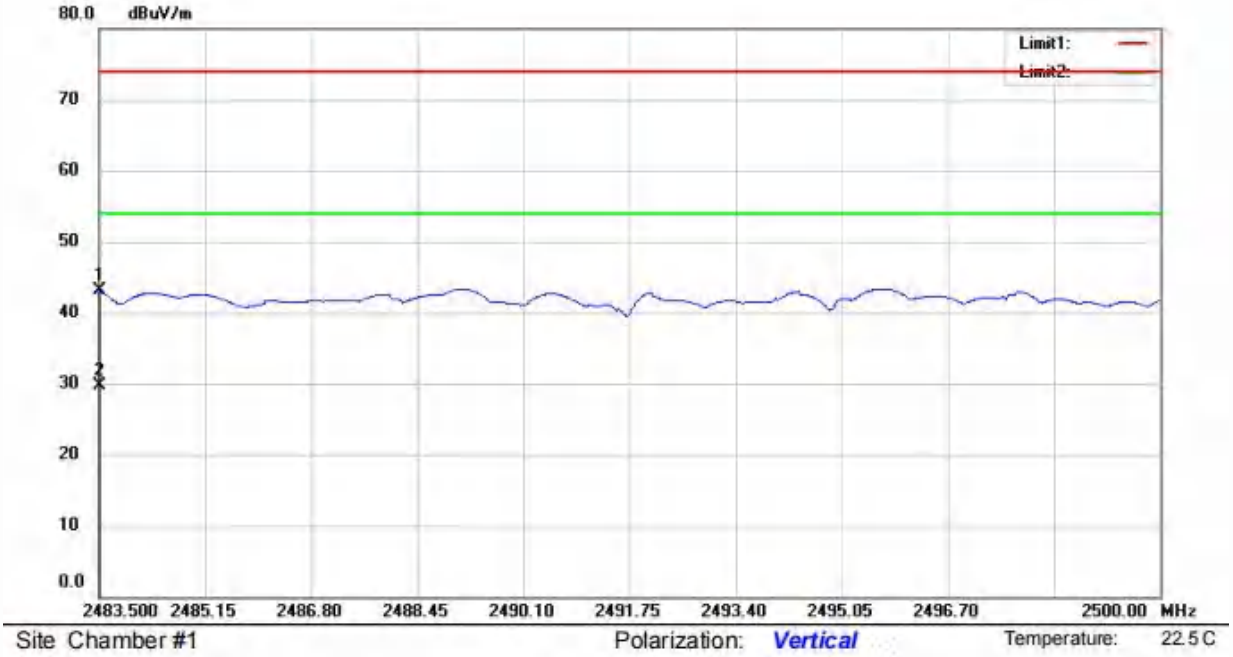

■ Spurious Emission below 1GHz (30MHz to 1GHz)

All the antenna(Antenna 1) and modes(BLE_1M, BLE_2M) mode have been tested, and the worst(Antenna 1, BLE_1M) result recorded was report as below:

Site Chamber #1 Polarization: *Horizontal* Temperature: 21.5C

No.	Mk.	Freq.	Reading Level	Ant. Factor	Pre Amp Gain	Cable loss	Measure-ment	Limit	Over		Hl	Degree	
		MHz	dBuV	dB/m	dB	dB	dBuV/m	dBuV/m	dB	Detector	cm	deg.	Comment
1		112.1305	42.56	11.12	30.83	1.17	24.02	43.50	-19.48	QP			
2		136.9391	53.35	8.16	30.69	1.35	32.17	43.50	-11.33	QP			
3		157.5588	55.36	8.75	30.58	1.48	35.01	43.50	-8.49	QP			
4	*	213.0151	55.77	11.96	30.29	1.81	39.25	43.50	-4.25	QP			
5		241.6763	53.40	12.77	30.14	2.06	38.09	46.00	-7.91	QP			
6		317.7011	47.53	14.29	29.83	2.23	34.22	46.00	-11.78	QP			

*:Maximum data x:Over limit !:over margin Operator: Ccyf

Remark:

1. Measurement (dBμV/m) = Antenna Factor(dB) -Amp Factor(dB) +Cable Loss(dB) + Reading(dBμV/m)
2. Over (dB) = Measurement (dBμV/m) - Limit (dBμV/m)

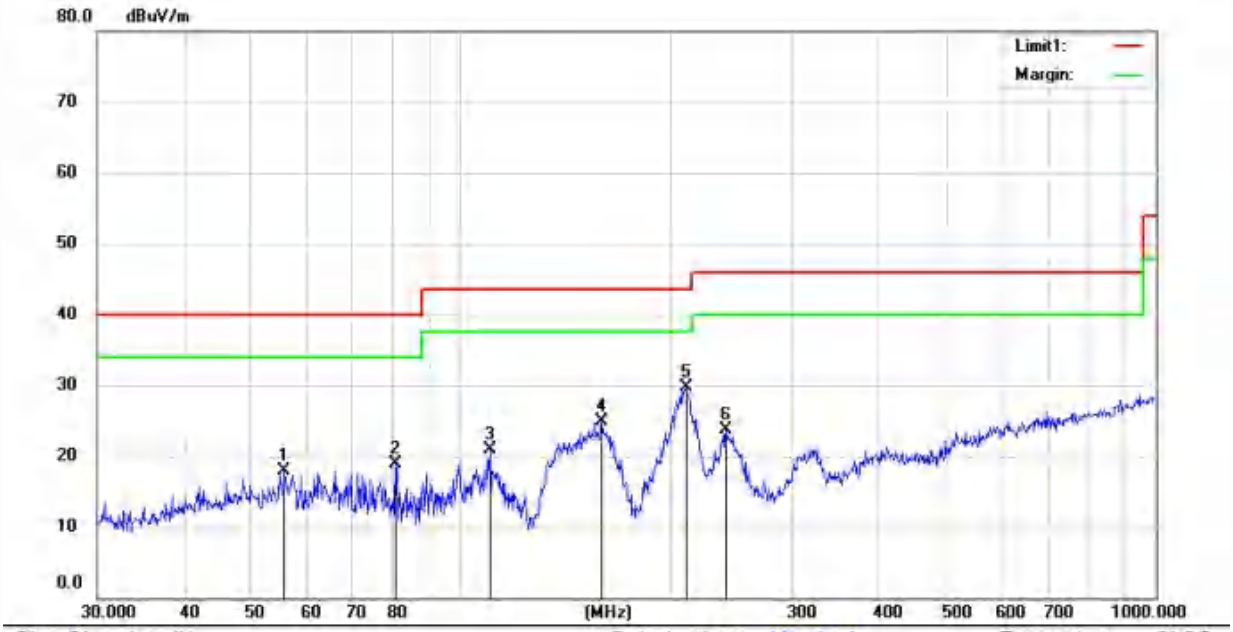

Site Chamber #1 Polarization: *Vertical* Temperature: 21.5 C

No.	Mk.	Freq.	Reading Level	Ant. Factor	Pre Amp Gain	Cable loss	Measure-ment	Limit	Over		Hl	Degree	
		MHz	dBuV	dB/m	dB	dB	dBuV/m	dBuV/m	dB	Detector	cm	deg.	Comment
1		55.8047	34.07	13.31	30.5	0.94	17.82	40.00	-22.18	QP			
2		80.6441	40.39	7.99	30.6	1.05	18.83	40.00	-21.17	QP			
3		110.1816	39.18	11.47	30.84	1.15	20.96	43.50	-22.54	QP			
4		159.7844	45.17	8.8	30.57	1.49	24.89	43.50	-18.61	QP			
5	*	210.7860	46.24	11.9	30.3	1.79	29.63	43.50	-13.87	QP			
6		240.8303	38.97	12.74	30.14	2.05	23.62	46.00	-22.38	QP			

*:Maximum data x:Over limit !:over margin Operator: Ccyf

Remark:
1. Measurement (dBμV/m) = Antenna Factor(dB) -Amp Factor(dB) +Cable Loss(dB) + Reading(dBμV/m)
2. Over (dB) = Measurement (dBμV/m) - Limit (dBμV/m)

8.7 CONDUCTED EMISSIONS TEST

8.7.1 Applicable Standard

According to FCC Part 15.207(a)
According to IC RSS-Gen 8.8

8.7.2 Conformance Limit

Conducted Emission Limit		
Frequency(MHz)	Quasi-peak	Average
0.15-0.5	66-56	56-46
0.5-5.0	56	46
5.0-30.0	60	50

Note: 1. The lower limit shall apply at the transition frequencies
2. The limit decreases in line with the logarithm of the frequency in the range of 0.15 to 0.50MHz.

8.7.3 Test Configuration

Test according to clause 7.3 conducted emission test setup

8.7.4 Test Procedure

The EUT was placed on a table which is 0.8m above ground plane.
Maximum procedure was performed on the highest emissions to ensure EUT compliance.
Repeat above procedures until all frequency measured were complete.

8.7.5 Test Results

Pass

The AC120V &240V voltage have been tested, and the worst result recorded was report as below:

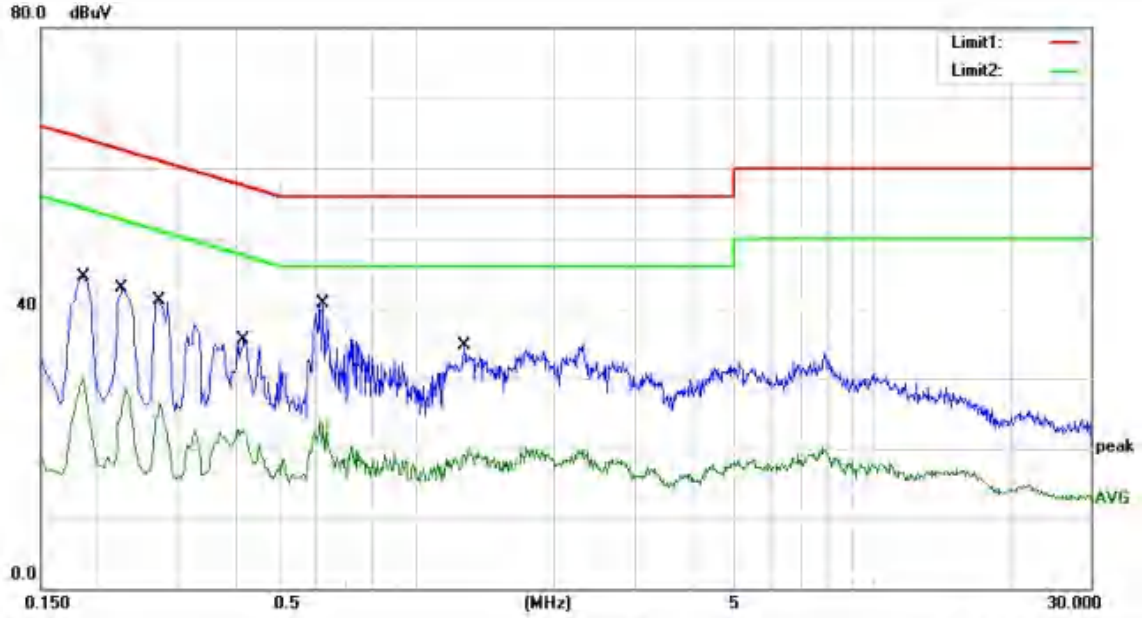

Site site #1 Phase: L1 Temperature: 25

No.	Mk.	Freq.	Reading Level	Correct Factor	Measure-ment	Limit	Over		
		MHz	dBuV	dB	dBuV	dBuV	dB	Detector	Comment
1		0.1860	27.48	17.04	44.52	64.21	-19.69	QP	
2		0.1860	13.18	17.04	30.22	54.21	-23.99	AVG	
3		0.2260	25.84	17.05	42.89	62.60	-19.71	QP	
4		0.2260	11.36	17.05	28.41	52.60	-24.19	AVG	
5		0.2740	23.94	17.09	41.03	61.00	-19.97	QP	
6		0.2740	9.36	17.09	26.45	51.00	-24.55	AVG	
7		0.4180	18.51	17.04	35.55	57.49	-21.94	QP	
8		0.4180	5.62	17.04	22.66	47.49	-24.83	AVG	
9	*	0.6260	23.67	17.05	40.72	56.00	-15.28	QP	
10		0.6260	7.11	17.05	24.16	46.00	-21.84	AVG	
11		1.2740	17.65	17.05	34.70	56.00	-21.30	QP	
12		1.2740	3.12	17.05	20.17	46.00	-25.83	AVG	

*:Maximum data x:Over limit !:over margin Comment: Factor build in receiver. Operator: Jayce

Remark:
1. Measurement (dBμV) = AMN Factor (dB) + Cable Loss (dB) + Reading (dBμV)
2. Over (dB) = Measurement (dBμV) - Limit (dBμV)

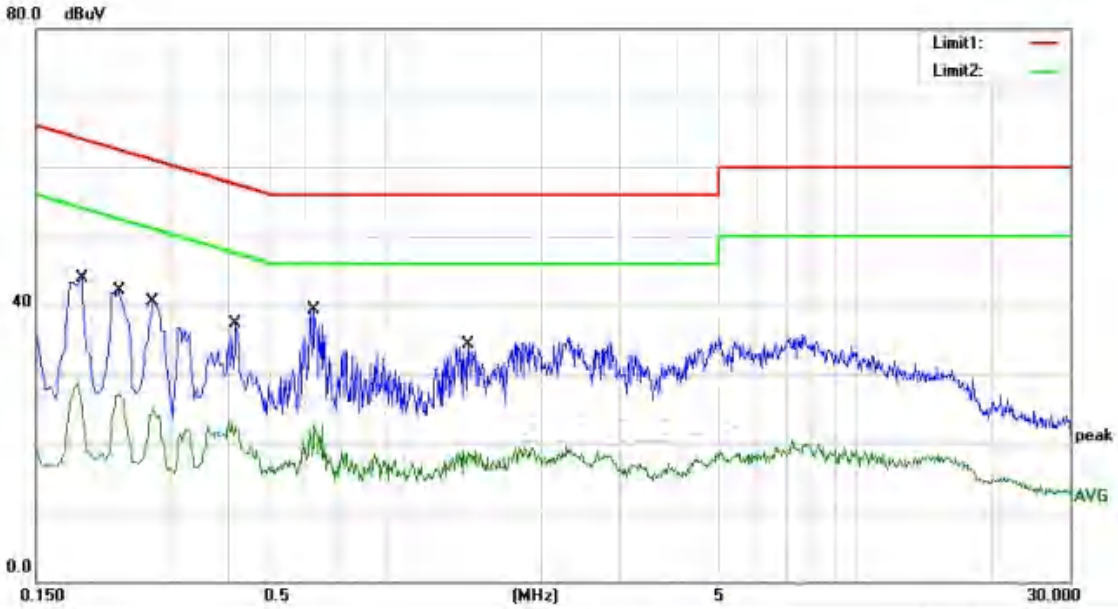

Site site #1 Phase: N Temperature: 25

No.	Mk.	Freq.	Reading Level	Correct Factor	Measure-ment	Limit	Over		
		MHz	dBuV	dB	dBuV	dBuV	dB	Detector	Comment
1		0.1900	26.83	17.04	43.87	64.04	-20.17	QP	
2		0.1900	11.78	17.04	28.82	54.04	-25.22	AVG	
3		0.2300	25.00	17.05	42.05	62.45	-20.40	QP	
4		0.2300	9.96	17.05	27.01	52.45	-25.44	AVG	
5		0.2740	23.40	17.09	40.49	61.00	-20.51	QP	
6		0.2740	7.71	17.09	24.80	51.00	-26.20	AVG	
7		0.4180	20.30	17.04	37.34	57.49	-20.15	QP	
8		0.4180	5.86	17.04	22.90	47.49	-24.59	AVG	
9	*	0.6260	22.16	17.05	39.21	56.00	-16.79	QP	
10		0.6260	5.68	17.05	22.73	46.00	-23.27	AVG	
11		1.3740	17.27	17.06	34.33	56.00	-21.67	QP	
12		1.3740	1.94	17.06	19.00	46.00	-27.00	AVG	

*:Maximum data x:Over limit !:over margin Comment: Factor build in receiver. Operator: Jayce

Remark:
1. Measurement (dBμV) = AMN Factor (dB) + Cable Loss (dB) + Reading (dBμV)
2. Over (dB) = Measurement (dBμV) - Limit (dBμV)

8.8 ANTENNA APPLICATION

8.8.1 Antenna Requirement

Standard	Requirement
FCC CRF Part 15.203	An intentional radiator shall be designed to ensure that no antenna other than that furnished by the responsible party shall be used with the device. The use of a permanently attached antenna or of an antenna that uses a unique coupling to the intentional radiator shall be considered sufficient to comply with the provisions of this section. The manufacturer may design the unit so that a broken antenna can be replaced by the user, but the use of a standard antenna jack or electrical connector is prohibited.
FCC 47 CFR Part 15.247 (b)	If transmitting antennas of directional gain greater than 6dBi are used, the power shall be reduced by the amount in dB that the directional gain of the antenna exceeds 6dBi.
RSS-Gen Section 6.8	The applicant for equipment certification shall provide a list of all antenna types that may be used with the transmitter, where applicable (i.e. for transmitters with detachable antenna), indicating the maximum permissible antenna gain (in dBi) and the required impedance for each antenna. The test report shall demonstrate the compliance of the transmitter with the limit for maximum equivalent isotropically radiated power (e.i.r.p.) specified in the applicable RSS, when the transmitter is equipped with any antenna type, selected from this list.
RSS-247 Section 5.4	If the transmitter employs an antenna system that emits multiple directional beams, but does not emit multiple directional beams simultaneously, the total output power conducted to the array or arrays that comprise the device (i.e. the sum of the power supplied to all antennas, antenna elements, staves, etc., and summed across all carriers or frequency channels) shall not exceed the applicable output power limit. However, the total conducted output power shall be reduced by 1 dB below the specified limits for each 3 dB that the directional gain of the antenna/antenna array exceeds 6 dBi. The directional antenna gain shall be computed as the sum of 10 log (number of array elements or staves) plus the directional gain of the element or stave having the highest gain.

8.8.2 Result

PASS.

Note: ☑ Antenna use a permanently attached antenna which is not replaceable.
☐ Not using a standard antenna jack or electrical connector for antenna replacement
☐ The antenna has to be professionally installed (please provide method of installation)

Please refer to the attached document Internal Photos to show the antenna connector.

Detail of Factor For Radiated Emission

Frequency(MHz)	Ant_F(dB)	Cab_L(dB)	Preamp(dB)	Correct Factor(dB)
0.009	20.6	0.03	\	20.63
0.15	20.7	0.1	\	20.8
1	20.9	0.15	\	21.05
10	20.1	0.28	\	20.38
30	18.8	0.45	\	19.25
30	11.7	0.62	27.9	-15.58
100	12.5	1.02	27.8	-14.28
300	12.9	1.91	27.5	-12.69
600	19.2	2.92	27	-4.88
800	21.1	3.54	26.6	-1.96
1000	22.3	4.17	26.2	0.27
1000	25.6	1.76	41.4	-14.04
3000	28.9	3.27	43.2	-11.03
5000	31.1	4.2	44.6	-9.3
8000	36.2	5.95	44.7	-2.55
10000	38.4	6.3	43.9	0.8
12000	38.5	7.14	42.3	3.34
15000	40.2	8.15	41.4	6.95
18000	45.4	9.02	41.3	13.12
18000	37.9	1.81	47.9	-8.19
21000	37.9	1.95	48.7	-8.85
25000	39.3	2.01	42.8	-1.49
28000	39.6	2.16	46.0	-4.24
31000	41.2	2.24	44.5	-1.06
34000	41.5	2.29	46.6	-2.81
37000	43.8	2.30	46.4	-0.3
40000	43.2	2.50	42.2	3.5

--------- END OF REPORT --------