TEST REPORT

Product Name : AL HydraBoom 2.0
Model Number : IMW1402, IMW1402-XXXXXXXXXX (XXXXXXXXXX stands for color code. X=A-Z, or blank)
FCC ID : SP9-00011HV2

Prepared for : Kysho Multimedia Ltd.
Address : Flat F, 5/F Valiant Industrial Centre, 2-12 Au Pui Wan Street, Fo Tan, Shatin, N.T. Hong Kong

Prepared by : EMTEK (DONGGUAN) CO., LTD.
Address : -1&2/F.,Building 2, Zone A, Zhongda Marine Biotechnology Research and Development Base, No.9, Xincheng Avenue, Songshanhu High-technology Industrial Development Zone, Dongguan, Guangdong, China

TEL: +86-0769-22807078
FAX: +86-0769-22807079

Report Number : EDG2403060171E01403R
Date(s) of Tests : Mar 06, 2024 to Apr 15, 2024
Date of issue : Apr 16, 2024

TABLE OF CONTENT

Test Report Description **Page**

1. TEST REPORT DESCRIPTION 3

2. GENERAL INFORMATION 5

2.1. Description of Device (EUT) 5
2.2. Input / Output Ports 5
2.3. Independent Operation Modes 6
2.4. Test Manner 6
2.5. Description of Test Facility 6
2.6. Test Software 6
2.7. Description of Support Device 7
2.8. Measurement Uncertainty 7

3. SUMMARY OF TEST RESULTS 8

4. MEASURING DEVICE AND TEST EQUIPMENT 9

4.1. Conducted Emission Test Equipment 9
4.2. For 3m Radiated Emission Measurement 9
4.3. For other test items: 9

5. 20DB BANDWIDTH 10

5.1. Test Procedure 10
5.2. Test Results 10

6. POWER LINE CONDUCTED EMISSION MEASUREMENT 11

6.1. Block Diagram of Test Setup 11
6.2. Limits 11
6.3. Test Procedure 11
6.4. Measuring Results 12

7. RADIATED EMISSION TEST 15

7.1. Measurement Procedure 15
7.2. Test SET-UP (Block Diagram of Configuration) 15
7.3. Radiated Emission Limit 16
7.4. Measurement Result 17

8. ANTENNA REQUIREMENT 20

1. TEST REPORT DESCRIPTION

Applicant	:	Kysho Multimedia Ltd.
Address	:	Flat F, 5/F Valiant Industrial Centre, 2-12 Au Pui Wan Street, Fo Tan, Shatin, N.T. Hong Kong
Manufacturer	:	Kysho Multimedia Ltd.
Address	:	Flat F, 5/F Valiant Industrial Centre, 2-12 Au Pui Wan Street, Fo Tan, Shatin, N.T. Hong Kong
Factory	:	Huizhou Shenke Xinfei Technology Co. Ltd.
Address	:	Building C, Tangxia Chanjing industrial Park, Huiyang District, Huizhou City
EUT	:	AL HydraBoom 2.0
Model Name	:	IMW1402, IMW1402-XXXXXXXXXX (XXXXXXXXXX stands for color code. X=A-Z, or blank)
Trademark	:	ALTEC LANSING

Measurement Procedure Used:

APPLICABLE STANDARDS	
STANDARD	TEST RESULT
FCC 47 CFR Part 2, Subpart J FCC 47 CFR Part 15, Subpart C	PASS

The above equipment was tested by DONGGUAN EMTEK CO., LTD. The test data, data evaluation, test procedures, and equipment configurations shown in this report were made in accordance with the procedures given in ANSI C63.10 (2013) and the energy emitted by the sample EUT tested as described in this report is in compliance with conducted and radiated emission limits of FCC Rules Part 15C

The test results of this report relate only to the tested sample identified in this report.

Date of Test : Mar 06, 2024 to Apr 15, 2024

Prepared by : Warren Deng /Editor

Reviewer : Tim Dong /Supervisor

Approve & Authorized Signer : Sam Lv / Manager

Modified History

Version	Report No.	Revision Date	Summary
	EDG2403060171E01403R	/	Original Report

2. GENERAL INFORMATION

2.1. Description of Device (EUT)

Characteristics	Description
Product Name	AL HydraBoom 2.0
Model number	IMW1402, IMW1402-XXXXXXXXXX (XXXXXXXXXX stands for color code. X=A-Z, or blank) (Note: These models are the same, except for the model names and color;IMW1402 was selected for full test.)
Power Supply	DC 5V/2A or DC7.4V built-in battery
Operating Frequency Range	110KHz-205KHz
Modulation Technique	FSK
ANT1 Wireless Output Power	5W(5V/1A)
Antenna1 Type	Induction Coil antenna
Temperature Range	-10°C ~ +60°C

2.2. Input / Output Ports

Port #	Name	Type*	Cable Max. >3m	Cable Shielded	Comments
1	Enclosure	N/E	--	--	None
2	DC IN port	I/O	No	Unshielded	1 port
3	USB port	DC	No	Unshielded	1 port

* Note: For the purposes of the present document, the following symbols apply:

AC AC Power Port
DC DC Power Port
N/E Non-Electrical
I/O Signal Input or Output Port (Not Involved in Process Control)
TP Telecommunication Ports

2.3. Independent Operation Modes

A ON

1. Wireless(100% load)
2. Wireless(50% load)
3. Wireless(0% load)

Note: The mode 1 is the worst mode

2.4. Test Manner

Test Items	Test Voltage	Operation Modes
Conducted Emission	AC 120V/60Hz	Mode A.1
Radiated Emission	AC 120V/60Hz	Mode A.1

2.5. Description of Test Facility

Site Description

EMC Lab. : **Accredited by CNAS**
The Laboratory has been assessed and proved to be in compliance with CNAS/CL01:2018
The Certificate Registration Number is L3150

Accredited by FCC
Designation Number: CN1300
Test Firm Registration Number: 945551

Accredited by A2LA
The Certificate Registration Number is 4321.02
Accredited by Industry Canada
The Certificate Registration Number is CN0113

Name of Firm : EMTEK(DONGGUAN) CO., LTD.

Site Location : -1&2/F.,Buiding 2,Zone A,Zhongda Marine Biotechnology Research and Development Base,N.9,Xincheng Avenue,Songshanhu High-technology Industrial Development Zone, Dongguan, Guangdong, China

2.6. Test Software

Item		Software
Conducted Emission	:	EMTEK(Ver.CON-03A1)
Radiated Emission	:	EMTEK(Ver.RA-03A1)

2.7. Description of Support Device

No.	Equipment	Trade name	Model	S/N	Power Cord
1.	Wireless Load	N/A	5W	N/A	N/A

2.8. Measurement Uncertainty

Test Item		Uncertainty
Conducted Emission Uncertainty	:	3.16dB(9k~150kHz Conduction 2#) 2.90dB(150k-30MHz Conduction 2#)
Radiated Emission Uncertainty (3m Chamber)	:	3.78dB (30M~1GHz Polarize: H) 4.27dB (30M~1GHz Polarize: V) 4.46dB (1~6GHz)

3. SUMMARY OF TEST RESULTS

EMISSION		
Description of Test Item	Standard & Limits	Results
Conducted Emission	FCC Part 15, Subpart C- Section 15.207 ANSI C63.10-2013	Pass
Radiated Emission	FCC Part 15, Subpart C- Section 15.209 ANSI C63.10-2013	Pass
Note: N/A is an abbreviation for Not Applicable.		

4. MEASURING DEVICE AND TEST EQUIPMENT

4.1. Conducted Emission Test Equipment

Equipment	Manufacturer	Model No.	Serial No.	Last Cal.	Cal. Interval
EMI Test Receiver	Rohde&Schwarz	ESCI	100137	2023/5/11	1Year
AMN	Rohde&Schwarz	ENV216	101209	2023/5/11	1Year
AMN	Rohde&Schwarz	ENV216	100017	2023/5/11	1Year
RF Switching Unit	CDS	RSU-M2	38401	2023/5/11	1Year
AMN	Schwarzbeck	NNLK8121	8121-641	2023/5/11	1Year
AMN	Rohde&Schwarz	ESH3-Z6	101101	2023/5/11	1Year
AMN	Rohde&Schwarz	ESH3-Z6	101102	2023/5/11	1Year
Power Splitters & Dividers	Weinschel Associates	WA1506A	A1066	2023/5/11	1Year
Current Probe	FCC	F-52	8377	2023/5/11	1Year
Passive voltage probe	Rohde&Schwarz	ESH2-Z3	100122	2023/5/11	1Year

4.2. For 3m Radiated Emission Measurement

Equipment	Manufacturer	Model No.	Serial No.	Last Cal.	Cal. Interval
EMI Test Receiver	Rohde&Schwarz	ESCI	101415	2023/5/11	1Year
Bi-log Hybrid Antenna	Schwarzbeck	VULB9163	141	2023/5/15	1Year
Pre-Amplifie	HP	8447F	OPTH64	2023/5/11	1 Year
Signal Analyzer	R&S	FSV30	103039	2023/5/11	1 Year
Horn Antenna	Schwarzbeck	BBHA9120D	1272	2023/5/15	1Year
Horn Antenna	Schwarzbeck	BBHA9170	9170-567	2023/5/15	1Year
Pre-Amplifie	LUNAR EM	PM1-18-40	J10100000081	2023/5/11	1Year
Loop antenna	Schwarzbeck	FMZB1519	1519-012	2023/5/15	1Year

4.3. For other test items:

Equipment	Manufacturer	Model No.	Serial No.	Last Cal.	Cal. Interval
Wireless Connectivity Tester	R&S	CMW270	102543	2023/05/11	1Year
Automatic Control Unit	Tonscend	JS0806-2	21I8060480	2023/05/11	1Year
Signal Analyzer	KEYSIGHT	N9010B	MY60242456	2023/05/11	1Year
Analog Signal Generator	KEYSIGHT	N5173B	MY61252625	2023/05/11	1Year
UP/DOWN-Converter	R&S	CMW-Z800A	100274	2023/05/11	1Year
Vector Signal Generator	KEYSIGHT	N5182B	MY61252674	2023/05/11	1Year
Frequency Extender	KEYSIGHT	N5182BX07	MY59362541	2023/05/11	1Year
Temperature&Humidity test chamber	ESPEC	EL-02KA	12107166	2023/05/11	1 Year

5. 20DB BANDWIDTH

5.1. Test Procedure

Set to the maximum power setting and enable the EUT transmit continuously
Set RBW = 1Hz.
Set the video bandwidth (VBW) =3Hz.
Set Span= 100Hz
Set Detector = Peak.
Set Trace mode = max hold.
Set Sweep = auto couple.
Measure and record the results in the test report.

5.2. Test Results

Temperature:	25℃	Test Date:	2024.04.09
Humidity:	57 %	Test By:	Calvin

ANT1 20dB Band=81.62 Hz

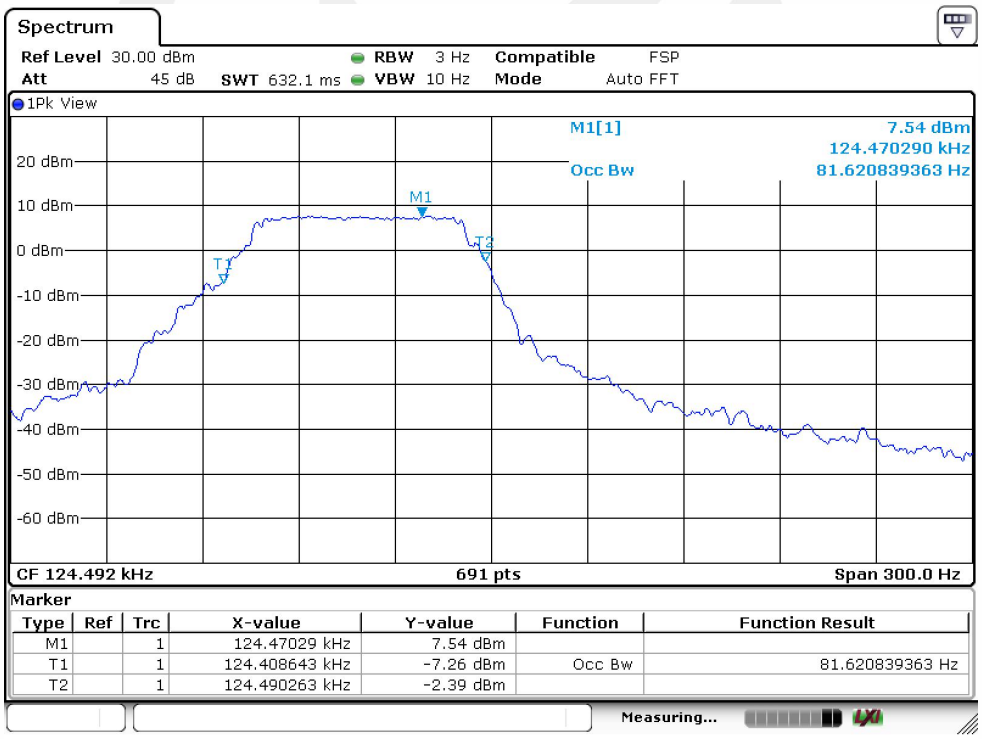

6. POWER LINE CONDUCTED EMISSION MEASUREMENT

6.1. Block Diagram of Test Setup

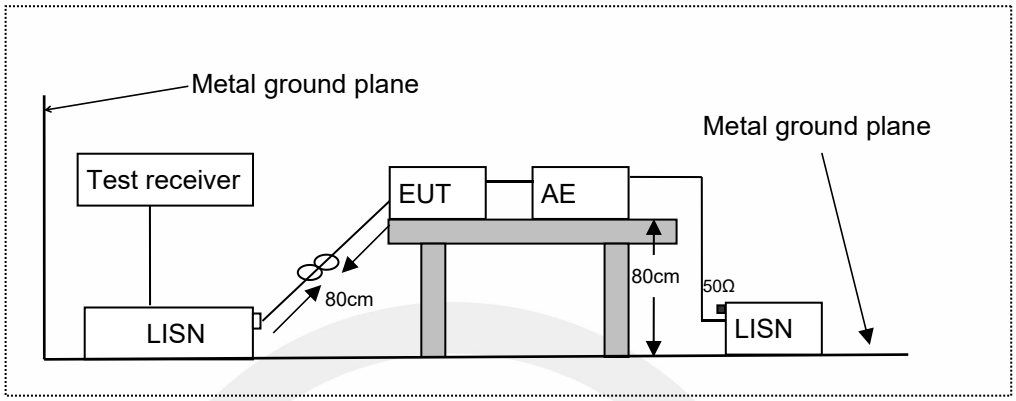

LISN: Line Impedance Stabilization Network
AE: Associated equipment
EUT: Equipment under test

6.2. Limits

FCC Part 15.207

Frequency (MHz)			Limit (dBμV)	
			Quasi-peak Level	Average Level
0.15	~	0.50	66.0 ~ 56.0 *	56.0 ~ 46.0 *
0.50	~	5.00	56.0	46.0
5.00	~	30.00	60.0	50.0

NOTE1-The lower limit shall apply at the transition frequencies.
NOTE2-The limit decreases linearly with the logarithm of the frequency in the range 0.15MHz to 0.50MHz.

6.3. Test Procedure

The EUT was placed on a desk 0.8 m height from the metal ground plane and 0.4 m from the conducting wall of the shielding room and it was kept at least 0.8 m from any other grounded conducting surface. The size of the table will nominally be 1.5 m x1.0 m.

The rear of the arrangement shall be flush with the back of the supporting tabletop unless that would not be possible or typical of normal use.

All units of equipment forming the system under test (includes the EUT as well as connected peripherals and associated equipment or devices) shall be arranged such that a nominal 0.1 m separation is achieved between the neighboring units.

Connect EUT to the power mains through a line impedance stabilization network (LISN). Where the mains cable supplied by the manufacturer is longer than 1 m, the excess should be folded at the centre into a bundle no longer than 0.4 m, so that its length is shortened to 1 m.

All the support units are connecting to the other LISN.

The LISN provides 50 ohm coupling impedance for the measuring instrument.

Both sides of AC line were checked for maximum conducted interference.

The frequency range from 150 kHz to 30 MHz was sweep.

Set the test-receiver system to quasi peak detect function and average detect function, and to measure the conducted emissions values.

Test results were obtained from the following equation:
Emission Level (dBμV) = LISN Factor (dB) + Cable Loss (dB) + Reading (dBμV)
Margin (dB) = Emission Level (dBμV) - Limit (dBμV)

6.4. Measuring Results

PASS.

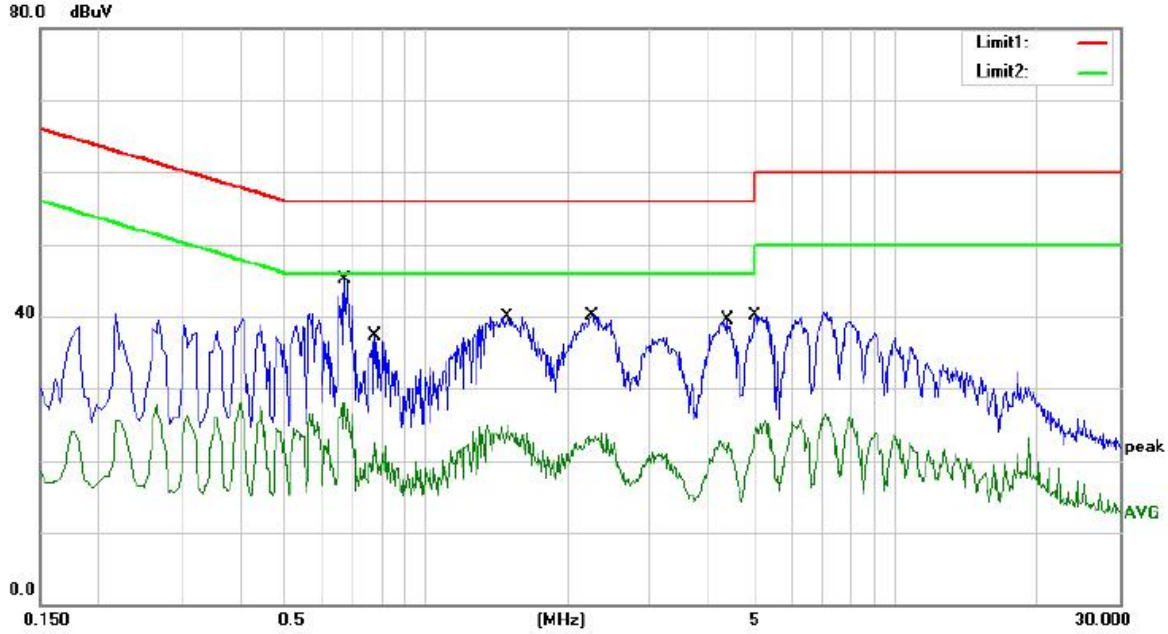

Site site #1 Phase: L1 Temperature: 21.5

No.	Mk.	Freq.	Reading Level	Correct Factor	Measure-ment	Limit	Over		
		MHz	dBuV	dB	dBuV	dBuV	dB	Detector	Comment
1	*	0.6700	28.05	17.03	45.08	56.00	-10.92	QP	
2		0.6700	11.11	17.03	28.14	46.00	-17.86	AVG	
3		0.7780	20.20	17.02	37.22	56.00	-18.78	QP	
4		0.7780	5.50	17.02	22.52	46.00	-23.48	AVG	
5		1.4900	22.91	17.07	39.98	56.00	-16.02	QP	
6		1.4900	7.84	17.07	24.91	46.00	-21.09	AVG	
7		2.2540	23.11	17.09	40.20	56.00	-15.80	QP	
8		2.2540	6.77	17.09	23.86	46.00	-22.14	AVG	
9		4.3740	22.43	16.97	39.40	56.00	-16.60	QP	
10		4.3740	5.65	16.97	22.62	46.00	-23.38	AVG	
11		5.0180	23.14	16.95	40.09	60.00	-19.91	QP	
12		5.0180	8.48	16.95	25.43	50.00	-24.57	AVG	

*:Maximum data x:Over limit !:over margin Comment: Factor build in receiver. Operator: Jian

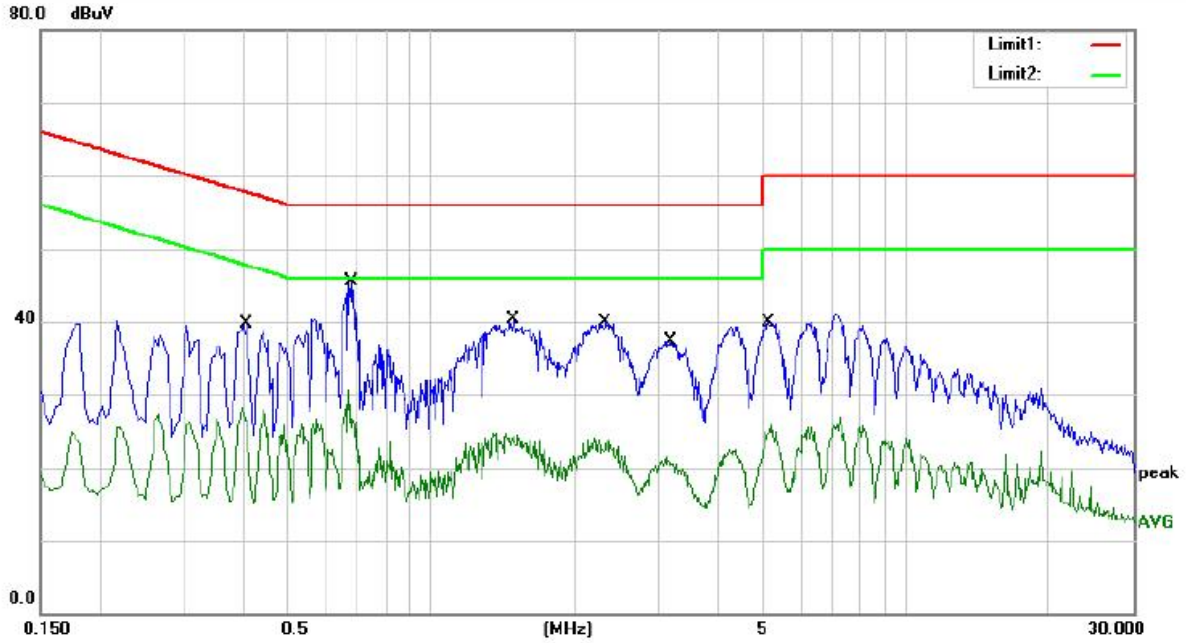

Site site #1 Phase: N Temperature: 21.5

No.	Mk.	Freq.	Reading Level	Correct Factor	Measure-ment	Limit	Over		
		MHz	dBuV	dB	dBuV	dBuV	dB	Detector	Comment
1		0.4100	22.60	17.04	39.64	57.65	-18.01	QP	
2		0.4100	11.31	17.04	28.35	47.65	-19.30	AVG	
3	*	0.6820	28.40	17.02	45.42	56.00	-10.58	QP	
4		0.6820	13.66	17.02	30.68	46.00	-15.32	AVG	
5		1.4900	23.29	17.07	40.36	56.00	-15.64	QP	
6		1.4900	7.63	17.07	24.70	46.00	-21.30	AVG	
7		2.3220	22.75	17.08	39.83	56.00	-16.17	QP	
8		2.3220	7.06	17.08	24.14	46.00	-21.86	AVG	
9		3.1820	20.29	17.01	37.30	56.00	-18.70	QP	
10		3.1820	4.42	17.01	21.43	46.00	-24.57	AVG	
11		5.1220	22.92	16.96	39.88	60.00	-20.12	QP	
12		5.1220	8.90	16.96	25.86	50.00	-24.14	AVG	

*:Maximum data x:Over limit !:over margin Comment: Factor build in receiver. Operator: Jian

Remark:
1. Measurement (dBμV) = AMN Factor (dB) + Cable Loss (dB) + Reading (dBμV)
2. Over (dB) = Measurement (dBμV) - Limit (dBμV)

7. RADIATED EMISSION TEST

7.1.Measurement Procedure

1. The EUT was placed on a turn table which is 0.8m above ground plane.
2. Maximum procedure was performed on the six highest emissions to ensure EUT compliance.
3. And also, each emission was to be maximized by changing the polarization of receiving antenna both horizontal and vertical.
4. Repeat above procedures until all frequency measured were complete.
5. Use the following receiver/spectrum analyzer settings:

   Span = wide enough to fully capture the emission being measured
   RBW=200Hz for 9KHz to 150KHz,
   RBW=9kHz for 150KHz to 30MHz,
   RBW=120KHz for 30MHz to 1GHz
   VBW ≥ 3*RBW
   Sweep = auto
   Detector function = QP
   Trace = max hold

7.2.Test SET-UP (Block Diagram of Configuration)

(A) Radiated Emission Test Set-Up, Frequency Below 30MHz

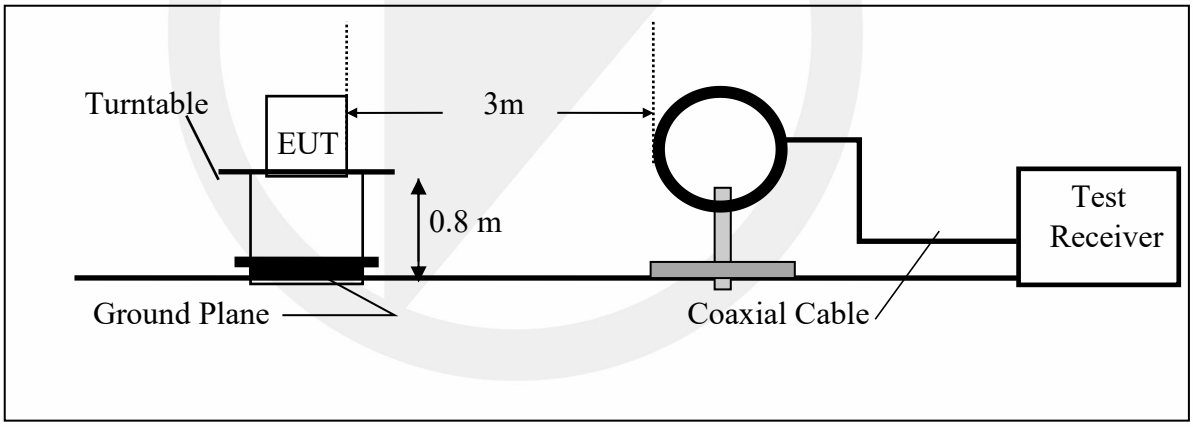

(B) Radiated Emission Test Set-Up, Frequency Below 1000MHz

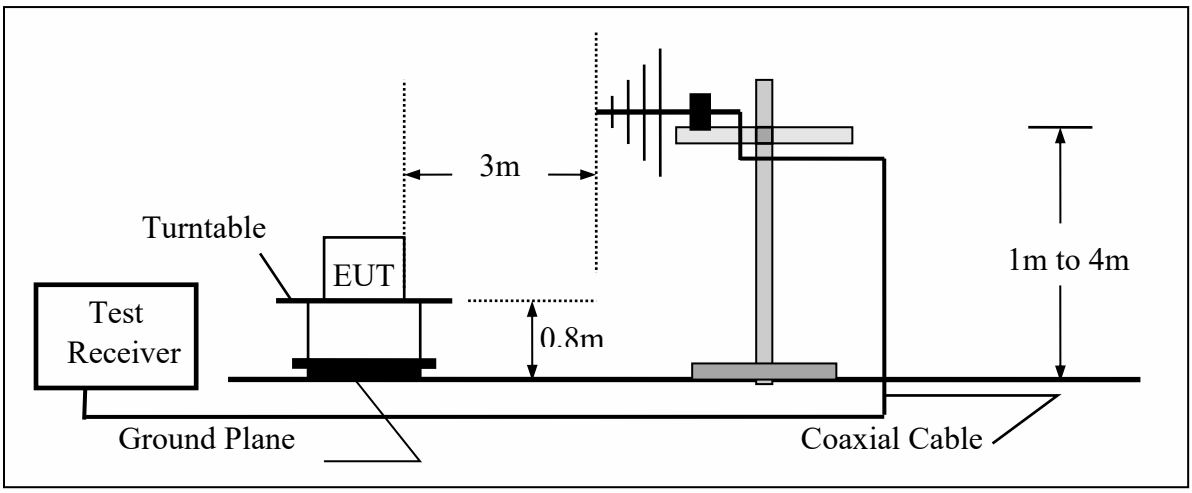

7.3.Radiated Emission Limit

The emissions from an intentional radiator shall not exceed the field strength levels specified in the following table 15.209(a):

FCC Part 15.209				
Frequency (MHz)	Field Strength Limitation		Field Strength Limitation Frequency tion at 3m Measurement Dist	
	(uV/m)	Dist	(uV/m)	(dBuV/m)
0.009 – 0.490	2400 / F(KHz)	300m	10000 * 2400/F(KHz)	20log 2400/F(KHz) + 80
0.490 – 1.705	24000 / F(KHz)	30m	100 * 24000/F(KHz)	20log 24000/F(KHz) + 40
1.705 – 30.00	30	30m	100* 30	20log 30 + 40
30.0 – 88.0	100	3m	100	20log 100
88.0 – 216.0	150	3m	150	20log 150
216.0 – 960.0	200	3m	200	20log 200
Above 960.0	500	3m	500	20log 500

15.205 Restricted bands of operation

MHz	MHz	MHz	GHz
0.090 - 0.110	16.42 - 16.423	399.9 - 410	4.5 - 5.15
[1]0.495 - 0.505	16.69475 - 16.69525	608 - 614	5.35 - 5.46
2.1735 - 2.1905	16.80425 - 16.80475	960 - 1240	7.25 - 7.75
4.125 - 4.128	25.5 - 25.67	1300 - 1427	8.025 - 8.5
4.17725 - 4.17775	37.5 - 38.25	1435 - 1626.5	9.0 - 9.2
4.20725 - 4.20775	73 - 74.6	1645.5 - 1646.5	9.3 - 9.5
6.215 - 6.218	74.8 - 75.2	1660 - 1710	10.6 - 12.7
6.26775 - 6.26825	108 - 121.94	1718.8 - 1722.2	13.25 - 13.4
6.31175 - 6.31225	123 - 138	2200 - 2300	14.47 - 14.5
8.291 - 8.294	149.9 - 150.05	2310 - 2390	15.35 - 16.2
8.362 - 8.366	156.52475 - 156.52525	2483.5 - 2500	17.7 - 21.4
8.37625 - 8.38675	156.7 - 156.9	2690 - 2900	22.01 - 23.12
8.41425 - 8.41475	162.0125 - 167.17	3260 - 3267	23.6 - 24.0
12.29 - 12.293	167.72 - 173.2	3332 - 3339	31.2 - 31.8
12.51975 - 12.52025	240 - 285	3345.8 - 3358	36.43 - 36.5
12.57675 - 12.57725	322 - 335.4	3600 - 4400	([2])

Remark: 1. Emission level in dBuV/m=20 log (uV/m)
2. Measurement was performed at an antenna to the closed point of EUT distance of meters.
3. Only spurious frequency is permitted to locate within the Restricted Bands specified in provision of ξ 15.205, and the emissions located in restricted bands also comply with 15.209 limit.

7.4.Measurement Result

Operation Mode:	Low frequency	Test Date :	2024.04.09
Frequency Range:	9KHz~30MHz	Temperature :	20℃
Test Result:	PASS	Humidity :	55 %
Measured Distance:	3m	Test By:	Ccyf

Freq. (MHz)	Ant.Pol. H/V	Emission Level (dBuV/m)	Limit 3m (dBuV/m)	Over (dB)	Note
0.0567	H	74.70	112.52	-37.82	PK
0.0900	H	72.02	108.51	-36.49	PK
0.1360	H	81.62	104.93	-23.31	PK
0.1824	H	67.72	102.38	-34.66	PK
0.2650	H	64.93	99.14	-34.21	PK
0.6468	H	54.75	71.40	-16.65	PK
0.0396	V	73.58	115.64	-42.06	PK
0.0900	V	73.14	108.51	-35.37	PK
0.1396	V	82.88	104.70	-21.82	PK
0.2146	V	68.95	100.97	-32.02	PK
0.2805	V	65.22	98.64	-33.42	PK
0.5070	V	58.12	73.50	-15.38	PK

Note: (1) All Readings are Peak Value.
(2) Emission Level= Reading Level+Probe Factor +Cable Loss.
(3) The average measurement was not performed when the peak measured data under the limit of average detection.
(4) EUT lying on the table position is the worst case result in the report.

30MHz-1GHz:

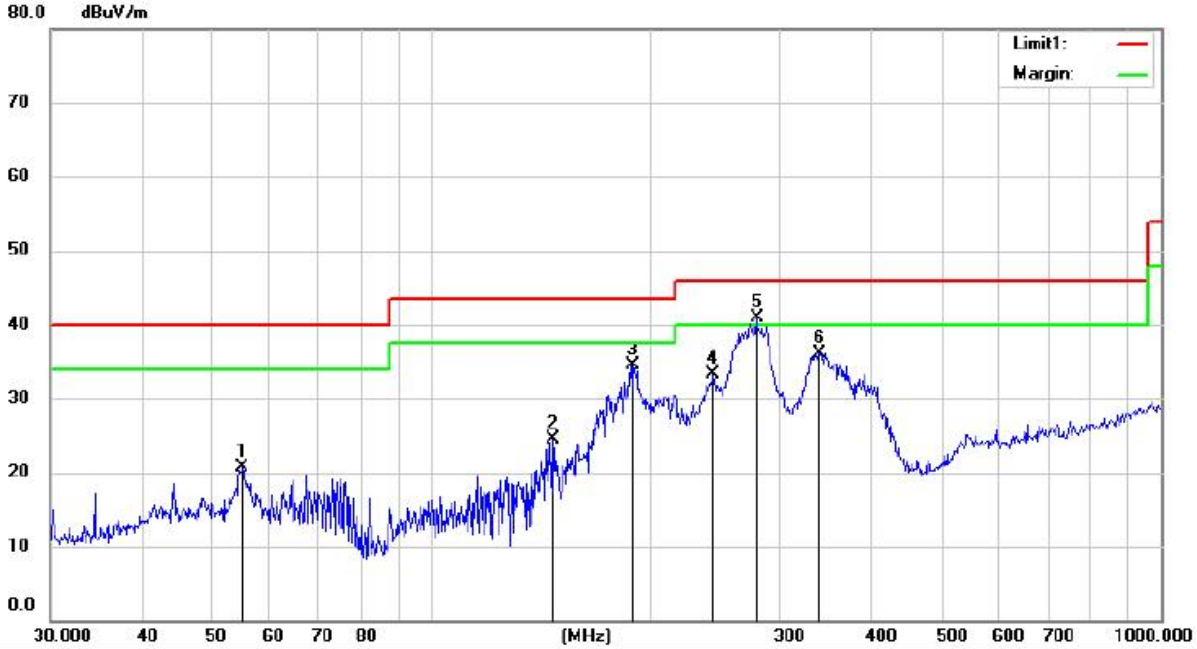

Site Chamber #1 Polarization: *Horizontal* Temperature: 21.8 C

No.	Mk.	Freq.	Reading Level	Ant. Factor	Pre Amp Gain	Cable loss	Measure-ment	Limit	Over		HI	Degree	
		MHz	dBuV	dB/m	dB	dB	dBuV/m	dBuV/m	dB	Detector	cm	deg.	Comment
1		55.0274	36.89	13.49	30.5	0.92	20.80	40.00	-19.20	QP			
2		146.3734	45.21	8.43	30.64	1.41	24.41	43.50	-19.09	QP			
3		189.0743	52.56	10.71	30.42	1.64	34.49	43.50	-9.01	QP			
4		243.3771	48.46	12.81	30.13	2.07	33.21	46.00	-12.79	QP			
5	*	279.0436	55.17	13.52	29.94	2.15	40.90	46.00	-5.10	QP			
6		339.5887	48.90	14.77	29.83	2.33	36.17	46.00	-9.83	QP			

*:Maximum data x:Over limit !:over margin Operator: Ccyf

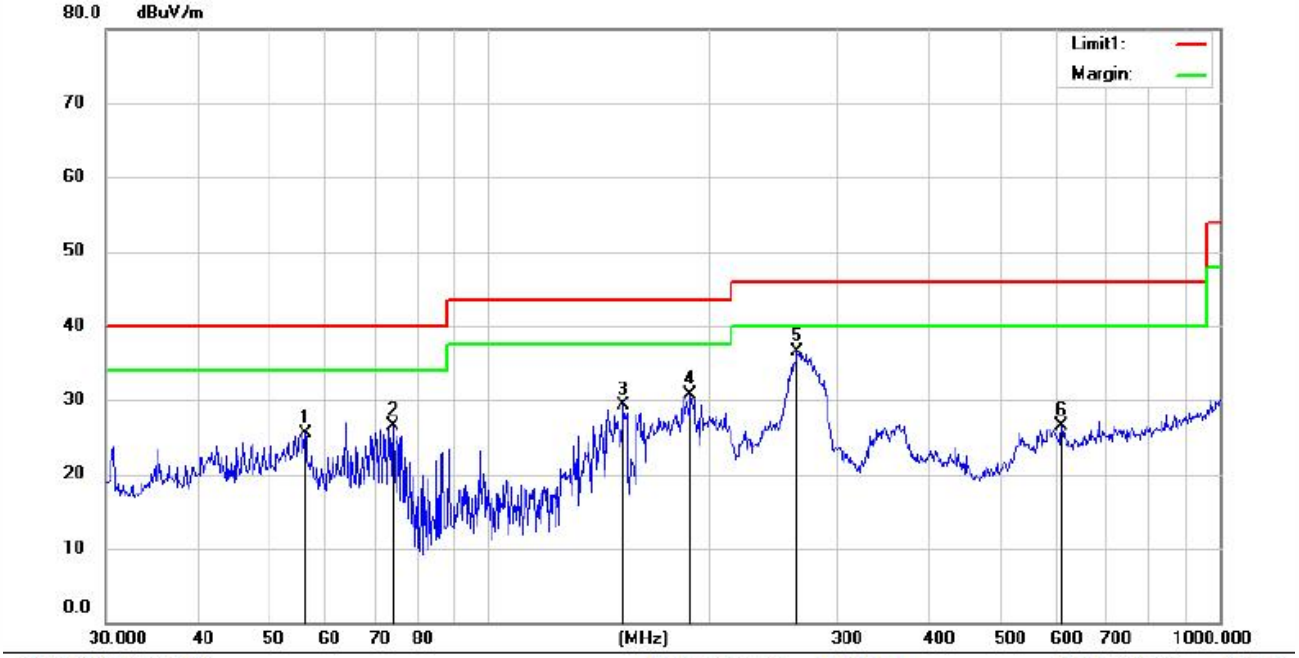

Site Chamber #1 Polarization: *Vertical* Temperature: 21.8 C

No.	Mk.	Freq.	Reading Level	Ant. Factor	Pre Amp Gain	Cable loss	Measure-ment	Limit	Over		HI	Degree	
		MHz	dBuV	dB/m	dB	dB	dBuV/m	dBuV/m	dB	Detector	cm	deg.	Comment
1		56.1974	41.84	13.21	30.5	0.95	25.50	40.00	-14.50	QP			
2		74.1351	47.26	8.74	30.57	1.09	26.52	40.00	-13.48	QP			
3		153.2004	49.87	8.63	30.61	1.46	29.35	43.50	-14.15	QP			
4		189.0743	48.73	10.71	30.42	1.64	30.66	43.50	-12.84	QP			
5	*	264.7457	51.11	13.27	30.02	2.14	36.50	46.00	-9.50	QP			
6		607.7867	33.09	20.14	29.97	3.15	26.41	46.00	-19.59	QP			

*:Maximum data x:Over limit !:over margin Operator: Ccyf

Remark:
1. Measurement (dBμV/m) = Antenna Factor(dB) -Amp Factor(dB) +Cable Loss(dB) + Reading(dBμV/m)
2. Over (dB) = Measurement (dBμV/m) - Limit (dBμV/m)

8. ANTENNA REQUIREMENT

The EUT's antenna, permanent attached antenna, used an Induction coil, The antenna's gain meets the requirement.

*** End of Report ***

声 明
Statement

1. 本报告无授权批准人签字及“检验检测专用章”无效；
   This report will be void without authorized signature or special seal for testing report.

2. 未经许可本报告不得部分复制；
   This report shall not be copied partly without authorization.

3. 本报告的检测结果仅对送测样品有效，委托方对样品的代表性和资料的真实性负责；
   The test results or observations are applicable only to tested sample. Client shall be responsible for representativeness of the sample and authenticity of the material.

4. 本检测报告中检测项目标注有特殊符号则该项目不在资质认定范围内，仅作为客户委托、科研、教学或内部质量控制等目的使用；
   The observations or tests with special mark fall outside the scope of accreditation, and are only used for purpose of commission, research, training, internal quality control etc.

5. 本检测报告以实测值进行符合性判定，未考虑不确定度所带来的风险，本实验室不承担相关责任，特别约定、标准或规范中有明确规定的除外；
   The test results or observations are provided in accordance with measured value, without taking risks caused by uncertainty into account. Without explicit stipulation in special agreements, standards or regulations, EMTEK shall not assume any responsibility.

6. 对本检测报告若有异议，请于收到报告之日起 20 日内提出；
   Objections shall be raised within 20 days from the date receiving the report.