4.
BLUETOOTH PAIRING

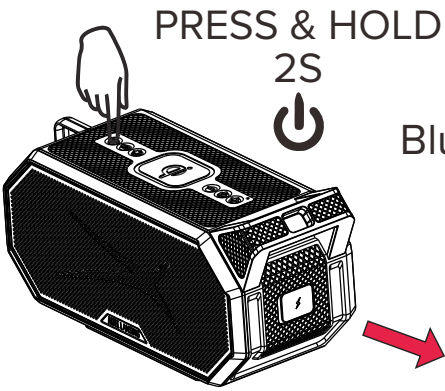

Pairing Mode
Blue Flashing LED

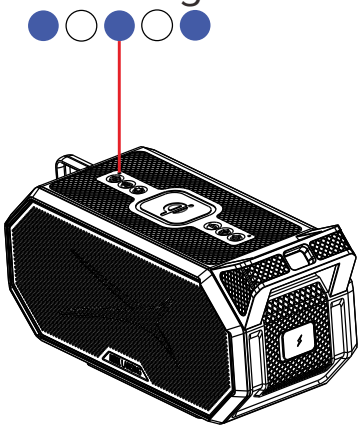

Bluetooth Connection:
Go to the Bluetooth page in the settings app on your phone. Make sure Bluetooth is ON before connecting to the available device 'AL HydraBoom 2.0'.

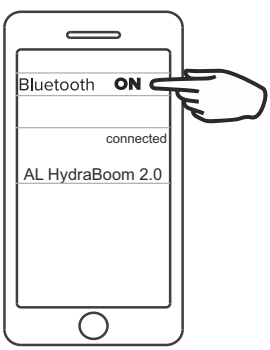

Paired
Blue Solid LED

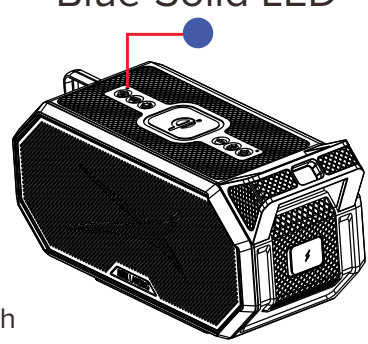

Once paired the speaker will automatically reconnect to any nearby paired devices the next time it is turned on.

To disconnect a currently paired device and connect another simply either forget the speaker in your Bluetooth Settings, turn off Bluetooth on the connected phone/tablet or press and hold the 🎙 button on the speaker for 5S.

This will cause the speaker to drop the connection and go to pairing mode.

5.
SPEAKER CONTROLS

Controlling Music

SHORT PRESS

- ✚ Volume Up
- ▬ Volume Down
- ⏻ Play/Pause
- 🎙 Answer & End Call

PRESS & HOLD 2S

- ⏻ ON/OFF
- ✚ Next Track
- ▬ Previous Track
- 🎙 Reject Incoming Call

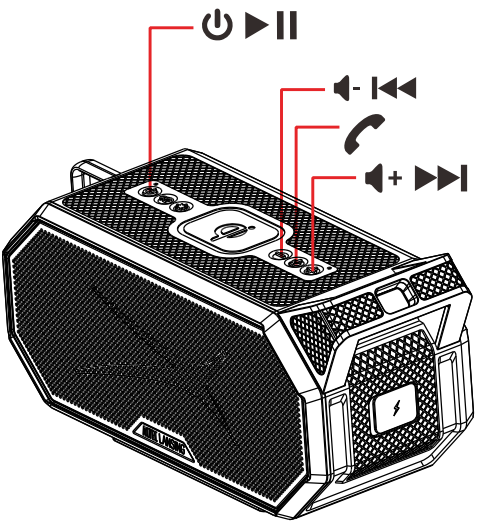

6.

MORE CONTROLS

Party Sync

Turn on the Primary speaker and connect it to your Bluetooth compatible device as normal. Start playing some music to this speaker.

PRESS & HOLD ⏻ FOR 2S AND PAIR AS USUAL

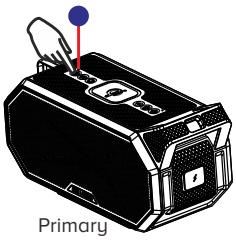

Now short press its Link button. Its LED will go green with very short flashes off indicating it is broadcasting as the Party Primary.

PRESS 🔗 TO TO ACTIVATE PRIMARY

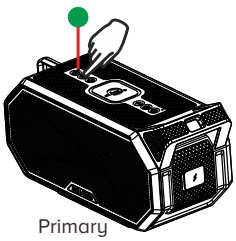

Turn on the secondary speaker **but don't connect anything to it** just short press the Link button on that speaker. It will be a Party Secondary and will start looking for the Primary.
The Secondary will connect to the Primary and its LED go solid green. They will now play in sync. You can connect more secondarys by turning them on and short pressing their Link buttons.
Note the Secondary LEDs return to Flashing Green if playback is paused on the Primary (Party Sync is Idle).
To exit Party Sync short press the Link button on each speaker you wish to disconnect.

PRESS 🔗 TO TO ACTIVATE SECONDARY

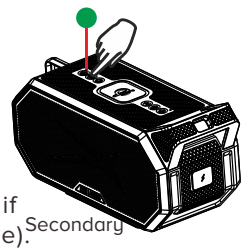

Flashing Green = Secondary Connecting / Idle
Solid Green = Secondary Connected /Playing

Multi color light modes

Briefly press the ✲ button to cycle round the different light modes. 11 modes are available:

1. Fade between colors
2. Pulse to music, step changing color
3. Single color (use App to change)
4. Bargraph with color step from right/bottom when hanging
5. Circle and back and forth
6. Bargraph with color step from bottom
7. Fire mode vertical
8. Fading colors left to right
9. Circle Rainbow color
10. Fire mode horizontal
11. Bargraph with color step from center
12. Off

Voice Assistant

Short press the 🎙 button to activate Voice Assistant on the connected phone/tablet.

Reset

A Reset will erase all settings. To perform a Reset, press & hold the 🎙 button for 10 seconds. The speaker will reset and power off.

7.
SAFETY PRECAUTIONS

When using your speaker, basic safety precautions should always be following including:

1. READ ALL INSTRUCTIONS BEFORE USING YOUR SPEAKER.
2. Only clean using clean cloth.
3. Do not expose this product to excessive heat or fire.
4. Do not expose this product to temperatures above 100°F. Keep out of direct sunlight.
5. Do not attempt to repair this product yourself. Contact a qualified service center if the product is in need of service.
6. Do not drop, crush, or expose this product to excessive physical force.
7. This product is not intended for commercial use.
8. When charging. keep all charging cables well ventilated. Do not keep your charging cable in contact with flammable materials such as bedding, linens or synthetic fabrics.

Maintenance and Care
- Use a soft cloth or paper towel to clean your speaker. Never use any harsh chemicals or detergents for cleaning. Make sure your speaker are dry before charging.
- When your speaker are not in use, they should be stored in a cool, dry place.
- Never tug or yank on a cable while it is connected to your charging speaker. Connect and disconnect cables as carefully as possible.
- Never expose your speaker to high temperatures, extreme cold.
- Please recycle or dispose of your speaker properly based on the laws and rules of your municipality. Contact local recycling facilities and/or the manufacturer of your speaker for further information.

8.

SPECIFICATIONS

Power input: 5V ⎓ 2A
USB output : 5V ⎓ 0.5A
Wireless output: 5W
Battery Type: Lithium-ion Battery
Play Time: Approximately 24 Hours*
(At 50% Volume position)

WARNING!
Sealing flap must be fully closed to maintain waterproof rating.

9.

FCC STATEMENT

FCC Statement
This equipment complies with Part 15 of the FCC Rules.
Operation is subject to the following two conditions:
(1) This device may not cause harmful interference, and
(2) This device must accept any interference received, Including interference that may cause undesired operation.

This equipment has been tested and found to comply with the limits for a Class B digital device, pursuant to part 15 of the FCC rules. These limits are designed to provide reasonable protection against harmful interference in a residential installation. This equipment generates, uses and can radiate radio frequency energy and, if not installed and used in accordance with the instructions, may cause harmful interference to radio communications.
However, there is no guarantee that interference will not occur in a particular installation. If this equipment does cause harmful interference to radio or television reception, which can be determined by turning the equipment off and on, the user is encouraged to try to correct the interference by one or more of the following measures:
-Reorient or relocate the receiving antenna.
-Increase the separation between the equipment and receiver.
-Connect the equipment into an outlet on a circuit different from that to which the receiver is connected.
-Consult the dealer or an experienced radio/TV technician for help.

FCC Radiation Exposure Statement:
Bluetooth:
The device has been evaluated to meet general RF exposure requirement.
The device can be used in the portable exposure condition without restriction.

Wireless Charger:
The equipment complies with FCC Radiation exposure limits set forth for uncontrolled environment.
This equipment should be installed and operated with minimum distance 20cm between the radiator and your body.

Warning:
To assure continued compliance, any changes or modifications not expressly approved by the party. Responsible for compliance could void the user's authority to operate this equipment.

Having trouble?
We're here to help!

Call us 24/7 at 1-855-292-4087
Email us at alsupport@sakar.com or
visit us at alteclansing.com

Keep manual and all relevant information for future reference.

10.

WARRANTY

This warranty covers the original consumer purchaser only and is not transferable.

This warranty covers products that fail to function properly UNDER NORMAL USAGE, due to defects in material or workmanship. Your product will be repaired or replaced at no charge for parts or labor for a period of one year.

What Is Not Covered by Warranty:
Damages or malfunctions not resulting from defects in material or workmanship and damages or malfunctions from other than normal use, including but limited to, repair by unauthorized parties, tampering, modification or accident.

To Obtain Warranty Service and Troubleshooting Information:
Call 1-855-292-4087, email alsupport@sakar.com, or visit our website at www.alteclansing.com.

To receive Warranty service along with the name and address of an authorized product service center, the original consumer purchaser must contact us for problem determination and service procedures. Proof of purchase in the form of a bill of sale or receipted invoice, evidencing that the Product is within the applicable Warranty period(s), MUST be presented in order to obtain the requested service. It is your responsibility to properly package and send any defective products along with a dated copy of proof of purchase, a written explanation of the problem, and a valid return address to the authorized service center at your expense. Do not include any other items or accessories with the defective product. Any products received by the authorized service center that are not covered by warranty will be returned unrepaired.

NO WARRANTIES, WHETHER EXPRESS OR IMPLIED, INCLUDING, BUT NOT LIMITED TO, ANY IMPLIED WARRANTIES OF MERCHANTABILITY OR FITNESS FOR A PARTICULAR PURPOSE, OTHER THAN THOSE EXPRESSLY DESCRIBED ABOVE SHALL APPLY. DISTRIBUTOR FURTHER DISCLAIMS ALL WARRANTIES AFTER THE EXPRESS WARRANTY PERIOD STATED ABOVE. NO OTHER EXPRESS WARRANTY OR GUARANTY GIVEN BY ANY PERSON, FIRM OR ENTITY WITH RESPECT TO THE PRODUCT SHALL BE BINDING ON DISTRIBUTOR. REPAIR, REPLACEMENT, OR REFUND OF THE ORIGINAL PURCHASE PRICE - AT DISTRIBUTOR'S SOLE DISCRETION -ARE THE EXCLUSIVE REMEDIES OF THE CONSUMER. IN NO EVENT WILL DISTRIBUTOR, ITS MANUFACTURERS, OR SAKAR INT. BE LIABLE FOR ANY INCIDENTAL, DIRECT, INDIRECT, SPECIAL, PUNITIVE OR CONSEQUENTIAL DAMAGES (SUCH AS, BUT NOT LIMITED TO, DAMAGES FOR LOSS OF PROFITS, BUSINESS, SAVINGS, DATA OR RECORDS) CAUSED BY THE USE, MISUSE OR INABILITY TO USE THE PRODUCT. EXCEPT AS STATED HEREIN, NO OTHER WARRANTIES SHALL APPLY. NOTWITHSTANDING THE FOREGOING, CONSUMER'S RECOVERY AGAINST DISTRIBUTOR SHALL NOT EXCEED THE PURCHASE PRICE OF THE PRODUCT SOLD BY DISTRIBUTOR. THIS WARRANTY SHALL NOT EXTEND TO ANYONE OTHER THAN THE ORIGINAL CONSUMER WHO PURCHASED THE PRODUCT AND IS NOT TRANSFERABLE.

Some countries, states or provinces do not allow the exclusion or limitation of incidental or consequential damages or allow limitations on warranties, so limitation or exclusions may not apply to you. This warranty gives you specific legal rights, and you may have other rights that vary from state to state or province to province. Contact your authorized retailer to determine if another warranty applies. This product is manufactured, distributed and sold by SAKAR International, Inc. All other trademarks are the property of the respective owner, who has not sponsored, endorsed or approved this product.

JUST LISTEN.

Altec Lansing
195 Carter Drive
Edison, NJ 08817

The Bluetooth® word mark and logos are registered trademarks owned by the Bluetooth SIG, Inc. and use of such marks by AL Infinity, LLC is under license. Other trademarks and trade names are those of their respective owners.

IMW1402V-240202