TEST REPORT

Product Name : AL HydraWave IMW1032,
Model Number : IMW1032-XXXXXXXXXX(XXXXXXXXXX stands for color code. X=A-Z, or blank)
FCC ID : SP9-00011HW

Prepared for : Kysho Multimedia Ltd.
Address : Flat F, 5/F Valiant Industrial Centre, 2-12 Au Pui Wan Street, Fo Tan, Shatin, N.T. Hong Kong

Prepared by : EMTEK (DONGGUAN) CO., LTD.
Address : -1&2/F.,Building 2, Zone A, Zhongda Marine Biotechnology Research and Development Base, No.9, Xincheng Avenue, Songshanhu High-technology Industrial Development Zone, Dongguan, Guangdong, China

TEL: +86-0769-22807078
FAX: +86-0769-22807079

Report Number : EDG2403060171E00601R
Date(s) of Tests : Mar 06, 2024 to Apr 11, 2024
Date of issue : Apr 12, 2024

Table of Contents

1 TEST RESULT CERTIFICATION 3
2 EUT TECHNICAL DESCRIPTION 5
3 SUMMARY OF TEST RESULT 6
4 TEST METHODOLOGY 7
4.1 GENERAL DESCRIPTION OF APPLIED STANDARDS 7
4.2 MEASUREMENT EQUIPMENT USED 7
4.3 DESCRIPTION OF TEST MODES 8
5 FACILITIES AND ACCREDITATIONS 9
5.1 FACILITIES 9
5.2 EQUIPMENT 9
5.3 LABORATORY ACCREDITATIONS AND LISTINGS 9
6 TEST SYSTEM UNCERTAINTY 10
7 SETUP OF EQUIPMENT UNDER TEST 11
7.1 RADIO FREQUENCY TEST SETUP 1 11
7.2 RADIO FREQUENCY TEST SETUP 2 11
7.3 CONDUCTED EMISSION TEST SETUP 13
7.4 BLOCK DIAGRAM CONFIGURATION OF TEST SYSTEM 14
7.5 SUPPORT EQUIPMENT 14
8 FREQUENCY HOPPING SYSTEM REQUIREMENTS 15
8.1 Standard Applicable 15
8.2 EUT Pseudorandom Frequency Hopping Sequence 15
8.3 Equal Hopping Frequency Use 16
8.4 Frequency Hopping System 16
9 TEST REQUIREMENTS 17
9.1 20DB&99%BANDWIDTH 17
9.2 CARRIER FREQUENCY SEPARATION 29
9.3 NUMBER OF HOPPING FREQUENCIES 32
9.4 AVERAGE TIME OF OCCUPANCY (DWELL TIME) 35
9.5 MAXIMUM PEAK CONDUCTED OUTPUT POWER 41
9.6 CONDUCTED SUPRIOUS EMISSION 47
9.7 RADIATED SPURIOUS EMISSION 57
9.8 CONDUCTED EMISSION TEST 66
9.9 ANTENNA APPLICATION 69

1 TEST RESULT CERTIFICATION

Applicant	:	Kysho Multimedia Ltd.
Address	:	Flat F, 5/F Valiant Industrial Centre, 2-12 Au Pui Wan Street, Fo Tan, Shatin, N.T. Hong Kong
Manufacturer	:	Kysho Multimedia Ltd.
Address	:	Flat F, 5/F Valiant Industrial Centre, 2-12 Au Pui Wan Street, Fo Tan, Shatin, N.T. Hong Kong
Factory	:	Huizhou Shenke Xinfei Technology Co. Ltd.
Address	:	Building C, Tangxia Chanjing industrial Park, Huiyang District, Huizhou City
EUT	:	AL HydraWave
Model Name	:	IMW1032, IMW1032-XXXXXXXXXX(XXXXXXXXXX stands for color code. X=A-Z, or blank)
Trademark	:	ALTEC LANSING

Measurement Procedure Used:

APPLICABLE STANDARDS	
STANDARD	**TEST RESULT**
FCC 47 CFR Part 2, Subpart J FCC 47 CFR Part 15, Subpart C	**PASS**
IC RSS-GEN, Issue 5(04-2018)+A1(03-2019)+A2(02-2021) IC RSS-247 Issue 3(08-2023)	**PASS**

The above equipment was tested by EMTEK(DONGGUAN) CO., LTD. The test data, data evaluation, test procedures, and equipment configurations shown in this report were made in accordance with the procedures given in ANSI C63.10 (2013) and the energy emitted by the sample EUT tested as described in this report is in compliance with the requirements of FCC Rules Part 2, Part 15.247, IC RSS-247 Issue 2 and IC RSS-GEN, Issue 5.

The test results of this report relate only to the tested sample identified in this report

Date of Test : Mar 06, 2024 to Apr 11, 2024

Prepared by : Warren Deng

Warren Deng /Editor

Reviewer : Tim Dong

Tim Dong /Supervisor

Approve & Authorized Signer : Sam Lv / Manager

Modified History

Version	Report No.	Revision Date	Summary
	EDG2403060171E00601R	/	Original Report

2 EUT TECHNICAL DESCRIPTION

Characteristics	Description
Product:	AL HydraWave
Model Number:	IMW1032, IMW1032-XXXXXXXXXX(XXXXXXXXXX stands for color code. X=A-Z, or blank) (Note: These models are the same, except for the model names and color;IMW1032 was selected for full test.)
Sample:	1#
Data Rate:	1Mbps for GFSK modulation 2Mbps for π/4-DQPSK modulation 3Mbps for 8DPSK modulation
Modulation:	GFSK, π/4-DQPSK, 8DPSK
Operating Frequency Range(s) :	2402-2480MHz
Number of Channels:	79 channels
Transmit Power Max:	0.57 dBm(0.001140 W)
Antenna Type:	PCB Antenna
Antenna Gain:	-0.58 dBi
Power supply:	DC 5V from USB DC 3.7V from battery
Product SW/HW version:	HW: V01 SW: V01
Radio SW/HW version:	HW: V01 SW: V01
Temperature Range:	-10°C ~ +60°C

Note1: *for more details, please refer to the User's manual of the EUT.*

3 SUMMARY OF TEST RESULT

FCC Part Clause	IC Part Clause	Test Parameter	Verdict	Remark
15.247(a)(1)	RSS-247.5.1 RSS-Gen.6.7	Emission Bandwidth	PASS	
15.247(a)(1)	RSS-247.5.1	Carrier Frequency Separation	PASS	
15.247(a)(1)	RSS-247.5.1	Number of Hopping Frequencies	PASS	
15.247(a)(1)	RSS-247.5.1	Average Time of Occupancy (Dwell Time)	PASS	
15.247(b)(1)	RSS-247.5.4 RSS-Gen 6.12	Maximum Peak Conducted Output Power	PASS	
15.247(d)	RSS-247 5.5	Conducted Spurious Emissions	PASS	
15.247(d) 15.209 15.205	RSS-Gen 8.9 RSS-Gen 8.10 RSS-Gen 6.13 RSS-247 3.3 RSS-247 5.5	Radiated Spurious Emissions	PASS	
15.207	RSS-Gen 8.8	Conducted Emission	PASS	
15.203 15.247(b)	RSS-Gen 6.8 RSS-247 5.4	Antenna Application	PASS	
15.247 (a) (1)/g/h	-	Frequency Hopping System	PASS	
NOTE1: N/A (Not Applicable) NOTE2: According to FCC OET KDB 558074, the report use radiated measurements in the restricted frequency bands. In addition, the radiated test is also performed to ensure the emissions emanating from the device cabinet also comply with the applicable limits.				

RELATED SUBMITTAL(S) / GRANT(S):

This submittal(s) (test report) is intended for **FCC ID: SP9-00011HW** filing to comply with Section 15.247 of the FCC Part 15, Subpart C Rules.

4 TEST METHODOLOGY

4.1 GENERAL DESCRIPTION OF APPLIED STANDARDS

According to its specifications, the EUT must comply with the requirements of the following standards:
FCC 47 CFR Part 2, Subpart J
FCC 47 CFR Part 15, Subpart C
IC RSS-GEN, Issue 5(04-2018)+A1(03-2019)+A2(02-2021)
IC RSS-247 Issue 3(08-2023)
FCC KDB 558074 D01 15.247 Meas Guidance v05r02

4.2 MEASUREMENT EQUIPMENT USED

Conducted Emission Test Equipment

Equipment	Manufacturer	Model No.	Serial No.	Last Cal.	Cal. Interval
EMI Test Receiver	Rohde&Schwarz	ESCI	100137	2023/5/11	1Year
AMN	Rohde&Schwarz	ENV216	101209	2023/5/11	1Year
AMN	Rohde&Schwarz	ENV216	100017	2023/5/11	1Year
RF Switching Unit	CDS	RSU-M2	38401	2023/5/11	1Year
AMN	Schwarzbeck	NNLK8121	8121-641	2023/5/11	1Year
AMN	Rohde&Schwarz	ESH3-Z6	101101	2023/5/11	1Year
AMN	Rohde&Schwarz	ESH3-Z6	101102	2023/5/11	1Year
Power Splitters & Dividers	Weinschel Associates	WA1506A	A1066	2023/5/11	1Year
Current Probe	FCC	F-52	8377	2023/5/11	1Year
Passive voltage probe	Rohde&Schwarz	ESH2-Z3	100122	2023/5/11	1Year

For Spurious Emissions Test

Equipment	Manufacturer	Model No.	Serial No.	Last Cal.	Cal. Interval
EMI Test Receiver	Rohde&Schwarz	ESCI	101415	2023/5/11	1Year
Bi-log Hybrid Antenna	Schwarzbeck	VULB9163	141	2023/5/15	1Year
Pre-Amplifie	HP	8447F	OPTH64	2023/5/11	1 Year
Signal Analyzer	R&S	FSV30	103039	2023/5/11	1 Year
Horn Antenna	Schwarzbeck	BBHA9120D	1272	2023/5/15	1Year
Horn Antenna	Schwarzbeck	BBHA9170	9170-567	2023/5/15	1Year
Pre-Amplifie	LUNAR EM	PM1-18-40	J10100000081	2023/5/11	1Year
Loop antenna	Schwarzbeck	FMZB1519	1519-012	2023/5/15	1Year

For other test items:

Equipment	Manufacturer	Model No.	Serial No.	Last Cal.	Cal. Interval
Wireless Connectivity Tester	R&S	CMW270	102543	2023/05/11	1Year
Automatic Control Unit	Tonscend	JS0806-2	21I8060480	2023/05/11	1Year
Signal Analyzer	KEYSIGHT	N9010B	MY60242456	2023/05/11	1Year
Analog Signal Generator	KEYSIGHT	N5173B	MY61252625	2023/05/11	1Year
UP/DOWN-Converter	R&S	CMW-Z800A	100274	2023/05/11	1Year
Vector Signal Generator	KEYSIGHT	N5182B	MY61252674	2023/05/11	1Year
Frequency Extender	KEYSIGHT	N5182BX07	MY59362541	2023/05/11	1Year
Temperature&Humidity test chamber	ESPEC	EL-02KA	12107166	2023/05/11	1 Year

4.3 DESCRIPTION OF TEST MODES

The EUT has been tested under its typical operating condition.
The EUT configuration for testing is installed on RF field strength measurement to meet the Commissions requirement and operating in a manner which intends to maximize its emission characteristics in a continuous normal application.

The Transmitter was operated in the normal operating mode. The TX frequency was fixed which was for the purpose of the measurements.

Test of channel included the lowest and middle and highest frequency to perform the test, then record on this report.

Those data rates (1Mbps for GFSK modulation(DH5); 2Mbps for π/4-DQPSK modulation(2DH5); 3Mbps for 8DPSK modulation(3DH5);)were used for all test.

Pre-defined engineering program for regulatory testing used to control the EUT for staying in continuous transmitting and receiving mode is programmed.

Frequency and Channel list for Bluetooth

Channel	Frequency (MHz)	Channel	Frequency (MHz)	Channel	Frequency (MHz)
0	2402	39	2441	…	…
1	2403	40	2442	76	2478
2	2404	41	2443	77	2479
…	…	…	…	78	2480
Note: fc=2402MHz+k×1MHz k=0 to 78					

Test Frequency and channel for Bluetooth

Lowest Frequency		Middle Frequency		Highest Frequency	
Channel	Frequency (MHz)	Channel	Frequency (MHz)	Channel	Frequency (MHz)
0	2402	39	2441	78	2480

5 FACILITIES AND ACCREDITATIONS

5.1 FACILITIES

All measurement facilities used to collect the measurement data are located at:

EMTEK (DONGGUAN) CO., LTD.
-1&2/F.,Building 2, Zone A, Zhongda Marine Biotechnology Research and Development Base, No.9, Xincheng Avenue, Songshanhu High-technology Industrial Development Zone, Dongguan, Guangdong, China
The sites are constructed in conformance with the requirements of ANSI C63.7, ANSI C63.4 and CISPR Publication 22.

5.2 EQUIPMENT

Radiated emissions are measured with one or more of the following types of linearly polarized antennas: tuned dipole, biconical, log periodic, bi-log, and/or ridged waveguide, horn. Spectrum analyzers with preselectors and quasi-peak detectors are used to perform radiated measurements.

Conducted emissions are measured with Line Impedance Stabilization Networks and EMI Test Receivers.

Calibrated wideband preamplifiers, coaxial cables, and coaxial attenuators are also used for making measurements.

All receiving equipment conforms to CISPR Publication 16-1, “Radio Interference Measuring Apparatus and Measurement Methods.”

5.3 LABORATORY ACCREDITATIONS AND LISTINGS

Site Description		
EMC Lab.	:	**Accredited by CNAS** The Laboratory has been assessed and proved to be in compliance with CNAS-CL01:2018 The Certificate Registration Number is L3150 **Accredited by FCC** Designation Number: CN1300 Test Firm Registration Number: 945551 **Accredited by A2LA** The Certificate Registration Number is 4321.02 **Accredited by Industry Canada** The Certificate Registration Number is CN0113
Name of Firm	:	EMTEK (DONGGUAN) CO., LTD.
Site Location	:	-1&2/F.,Building 2, Zone A, Zhongda Marine Biotechnology Research and Development Base, No.9, Xincheng Avenue, Songshanhu High-technology Industrial Development Zone, Dongguan, Guangdong, China

6 TEST SYSTEM UNCERTAINTY

The following measurement uncertainty levels have been estimated for tests performed on the apparatus:

Test Parameter	Measurement Uncertainty
Radio Frequency	±1x10^-5
Maximum Peak Output Power Test	±1.0dB
Conducted Emissions Test	±2.0dB
Radiated Emission Test	±2.0dB
Power Density	±2.0dB
Occupied Bandwidth Test	±1.0dB
Band Edge Test	±3dB
All emission, radiated	±3dB
Antenna Port Emission	±3dB
Temperature	±0.5℃
Humidity	±3%

Measurement Uncertainty for a level of Confidence of 95%

7 SETUP OF EQUIPMENT UNDER TEST

7.1 RADIO FREQUENCY TEST SETUP 1

The Bluetooth component's antenna ports(s) of the EUT are connected to the measurement instrument per an appropriate attenuator. The EUT is controlled by PC/software to emit the specified signals for the purpose of measurements.

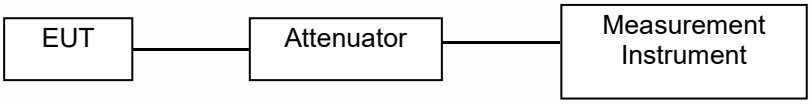

7.2 RADIO FREQUENCY TEST SETUP 2

The test site semi-anechoic chamber has met the requirement of NSA tolerance 4 dB according to the standards: ANSI C63.10. The test distance is 3m.The setup is according to the requirements in Section 13.1.4.1 of ANSI C63.10-2013 and CAN/CSA-CEI/IEC CISPR 22.

Below 30MHz：
The EUT is placed on a turntable 0.8meters above the ground in the chamber, 3 meter away from the antenna (loop antenna). The Antenna should be positioned with its plane vertical at the specified distance from the EUT and rotated about its vertical axis for maximum response at each azimuth about the EUT. The center of the loop shall be 1 m above the ground. For certain applications, the loop antenna plane may also need to be positioned horizontally at the specified distance from the EUT.

Above 30MHz：
The EUT is placed on a turntable 0.8meters above the ground in the chamber, 3 meter away from the antenna. The maximal emission value is acquired by adjusting the antenna height, polarisation and turntable azimuth. Normally, the height range of antenna is 1 m to 4 m, the azimuth range of turntable is 0° to 360°, and the receive antenna has two polarizations Vertical (V) and Horizontal (H).

Above 1GHz:
(Note: the FCC's permission to use 1.5m as an alternative per TCBC Conf call of Dec. 2, 2014.)
The EUT is placed on a turntable 1.5 meters above the ground in the chamber, 3 meter away from the antenna. The maximal emission value is acquired by adjusting the antenna height, polarisation and turntable azimuth. Normally, the height range of antenna is 1 m to 4 m, the azimuth range of turntable is 0° to 360°, and the receive antenna has two polarizations Vertical (V) and Horizontal (H).

(a) Radiated Emission Test Set-Up, Frequency Below 30MHz

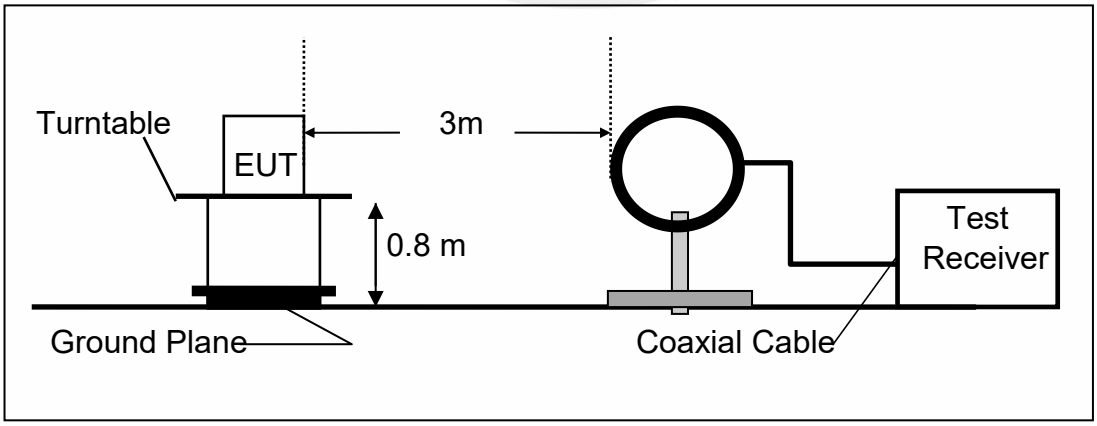

(b) Radiated Emission Test Set-Up, Frequency Below 1000MHz

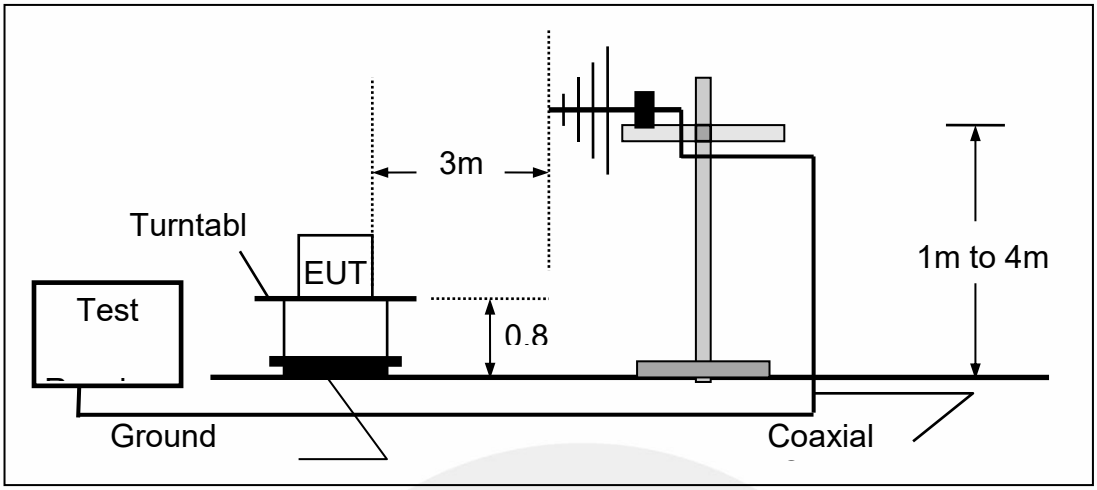

(c) Radiated Emission Test Set-Up, Frequency above 1000MHz

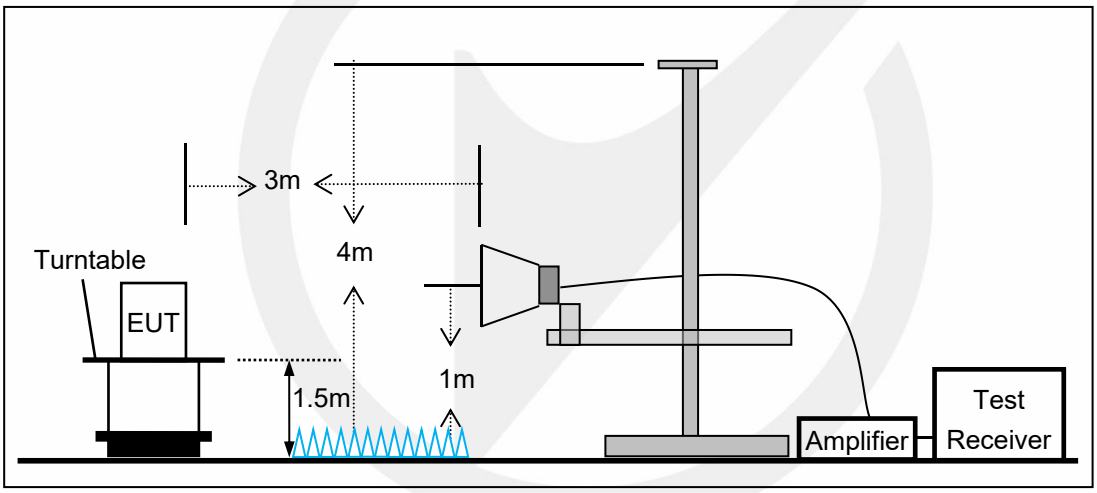

7.3 CONDUCTED EMISSION TEST SETUP

The mains cable of the EUT (Perfect Share Mini) must be connected to LISN. The LISN shall be placed 0.8m from the boundary of EUT and bonded to a ground reference plane for LISN mounted on top of the ground reference plane. This distance is between the closest points of the LISN and the EUT. All other units of the EUT and associated equipment shall be at least 0.8m from the LISN.

Ground connections, where required for safety purposes, shall be connected to the reference ground point of the LISN and, where not otherwise provided or specified by the manufacturer, shall be of same length as the mains cable and run parallel to the mains connection at a separation distance of not more than 0.8m.

According to the requirements in Section 13.1.4.1 of ANSI C63.10-2013 Conducted emissions from the EUT measured in the frequency range between 0.15 MHz and 30 MHz using CISPR Quasi-Peak and average detector mode.

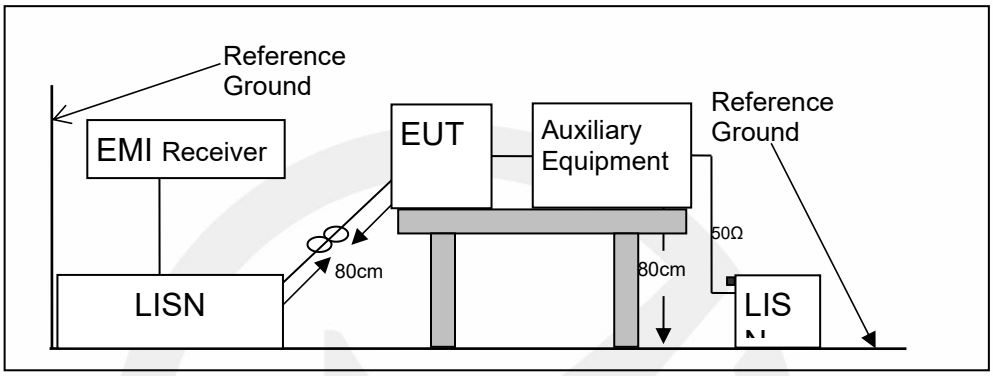

7.4 BLOCK DIAGRAM CONFIGURATION OF TEST SYSTEM

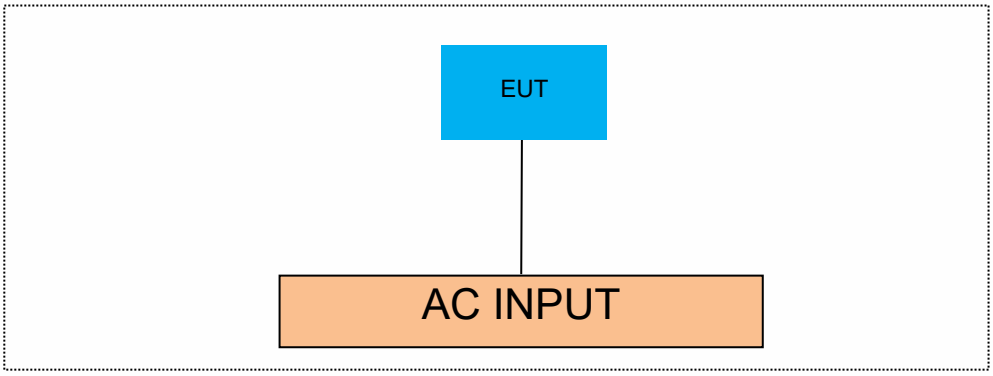

7.5 SUPPORT EQUIPMENT

EUT Cable List and Details			
Cable Description	Length (m)	Shielded/Unshielded	With / Without Ferrite
/	/	/	/

Auxiliary Cable List and Details			
Cable Description	Length (m)	Shielded/Unshielded	With / Without Ferrite
USB line	0.5	/	/
/	/	/	/

Auxiliary Equipment List and Details			
Description	Manufacturer	Model	Serial Number
Notebook	Lenovo	E46L	11S168003748Z0LR06E0HG
Adaptor	Apple	/	/
/	/	/	

Notes:

1. *All the equipment/cables were placed in the worst-case configuration to maximize the emission during the test.*
2. *Grounding was established in accordance with the manufacturer's requirements and conditions for the intended use.*

8 FREQUENCY HOPPING SYSTEM REQUIREMENTS

8.1 Standard Applicable

According to FCC Part 15.247(a)(1), The system shall hop to channel frequencies that are selected at the system hopping rate from a pseudo randomly ordered list of hopping frequencies. Each frequency must be used equally on the average by each transmitter. The system receivers shall have input bandwidths that match the hopping channel bandwidths of their corresponding transmitters and shall shift frequencies in synchronization with the transmitted signals.

(g) Frequency hopping spread spectrum systems are not required to employ all available hopping channels during each transmission. However, the system, consisting of both the transmitter and the receiver, must be designed to comply with all of the regulations in this section should the transmitter be presented with a continuous data (or information) stream. In addition, a system employing short transmission bursts must comply with the definition of a frequency hopping system and must distribute its transmissions over the minimum number of hopping channels specified in this section.

(h) The incorporation of intelligence within a frequency hopping spread spectrum system that permits the system to recognize other users within the spectrum band so that it individually and independently chooses and adapts its hopsets to avoid hopping on occupied channels is permitted. The coordination of frequency hopping systems in any other manner for the express purpose of avoiding the simultaneous occupancy of individual hopping frequencies by multiple transmitters is not permitted.

8.2 EUT Pseudorandom Frequency Hopping Sequence

The channel is represented by a pseudo-random hopping sequence hopping through the 79 RF channels. The hopping sequence is unique for the piconet and is determined by the Bluetooth device address of the master; the phase in the hopping sequence is determined by the Bluetooth clock of the master.The channel is divide into time slots where each slot corresponds to an RF hop frequency. Consecutive hops correspond to different RF hop frequencies. The normal hop is 1 600 hops/s.

The pseudorandom sequence may be generated in a nine-stage shift register whose 5th and 9th stage outputs are added in a modulo-two addition stage, and the result is fed back to the input of the first stage. The sequence begins with the first ONE of 9 consecutive ONEs; i.e. the shift register is initialized with nine ones. Number of shift register stages: 9
Length of pseudo-random sequence: 29-1 = 511 bits
Longest sequence of zeros: 8 (non-inverted signal)

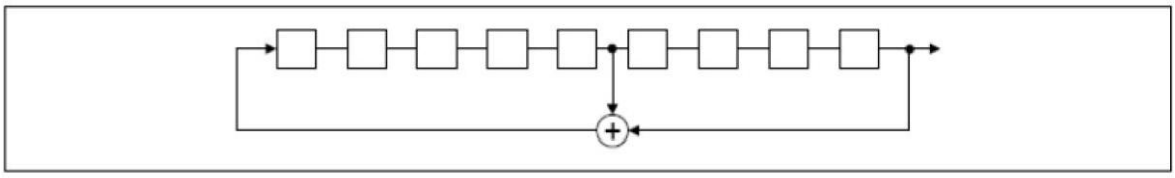

Linear Feedback Shift Register for Generation of the PRBS sequence

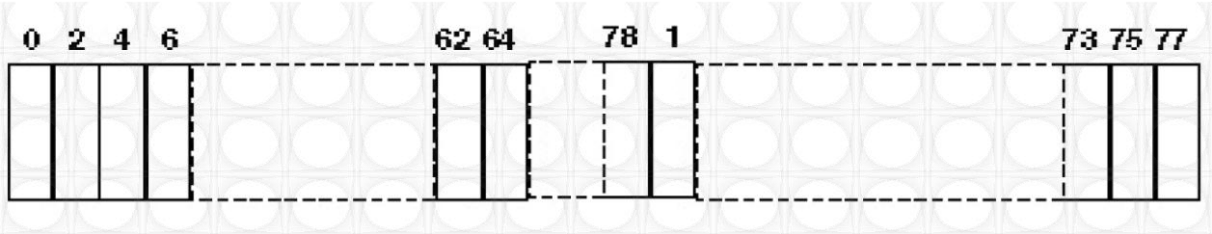

Each frequency used equally on the average by each transmitter.
The system receiver have input bandwidths that match the hopping channel bandwidths of their corresponding transmitters and shift frequencies in synchronization with the transmitted signals.

8.3 Equal Hopping Frequency Use

All Bluetooth units participating in the piconet are time and hop-synchronized to the channel.

Example of a 79 hopping sequence in data mode:
35, 27, 6, 44, 14, 61, 74, 32, 1, 11, 23, 2, 55, 65, 29, 3, 9, 52, 78, 58, 40, 25, 0, 7, 18, 26, 76, 60, 47, 50, 2, 5, 16, 37, 70, 63, 66, 54, 20, 13, 4, 8, 15, 21, 26, 10, 73, 77, 67, 69, 43, 24, 57, 39, 46, 72, 48, 33, 17, 31, 75, 19, 41, 62, 68, 28, 51, 66, 30, 56, 34, 59, 71, 22, 49, 64, 38, 45, 36, 42, 53
Each Frequency used equally on the average by each transmitter

8.4 Frequency Hopping System

This transmitter device is frequency hopping device, and complies with FCC part 15.247 rule.

This device uses Bluetooth radio which operates in 2400-2483.5 MHz band. Bluetooth uses a radio technology called frequency-hopping spread spectrum, which chops up the data being sent and transmits chunks of it on up to 79 bands (1 MHz each; centred from 2402 to 2480 MHz) in the range 2,400-2,483.5 MHz. The transmitter switches hop frequencies 1,600 times per second to assure a high degree of data security. All Bluetooth devices participating in a given piconet are synchronized to the frequency-hopping channel for the piconet. The frequency hopping sequence is determined by the master's device address and the phase of the hopping sequence (the frequency to hop at a specific time) is determined by the master's internal clock. Therefore, all slaves in a piconet must know the master's device address and must synchronize their clocks with the master's clock.

Adaptive Frequency Hopping (AFH) was introduced in the Bluetooth specification to provide an effective way for a Bluetooth radio to counteract normal interference. AFH identifies "bad" channels, where either other wireless devices are interfering with the Bluetooth signal or the Bluetooth signal is interfering with another device. The AFH- enabled Bluetooth device will then communicate with other devices within its piconet to share details of any identified bad channels. The devices will then switch to alternative available "good" channels, away from the areas of interference, thus having no impact on the bandwidth used.

9 TEST REQUIREMENTS

9.1 20DB&99%BANDWIDTH

9.1.1 Applicable Standard

According to FCC Part 15.247(a)(1) and KDB 558074 D01 15.247 MEAS GUIDANCE v05r02
According to IC RSS-247.5.1 and RSS-Gen.6.7

9.1.2 Conformance Limit

No limit requirement.

9.1.3 Test Configuration

Test according to clause 7.1 radio frequency test setup 1

9.1.4 Test Procedure

The EUT was operating in Bluetooth mode and controlled its channel. Printed out the test result from the spectrum by hard copy function.
The RF output of EUT was connected to the spectrum analyzer by RF cable and attenuator. The path loss was compensated to the results for each measurement.
Set to the maximum power setting and enable the EUT transmit continuously
Set RBW = 30 kHz.
Set the video bandwidth (VBW) =100 kHz.
Set Span= approximately 2 to 3 times the 20 dB bandwidth
Set Detector = Peak.
Set Trace mode = max hold.
Set Sweep = auto couple.
The EUT should be transmitting at its maximum data rate. Allow the trace to stabilize. Use the marker-to-peak function to set the marker to the peak of the emission. Use the marker-delta function to measure 20 dB down one side of the emission. Reset the markerdelta function, and move the marker to the other side of the emission, until it is (as close as possible to) even with the reference marker level. The marker-delta reading at this point is the 20 dB bandwidth of the emission.
If this value varies with different modes of operation (e.g., data rate, modulation format, etc.), repeat this test for each variation.
Measure and record the results in the test report.

Test Results

Temperature:	25° C
Relative Humidity:	45%
ATM Pressure:	1011 mbar

TestMode	Antenna	Frequency[MHz]	20db EBW[MHz]	FL[MHz]	FH[MHz]	Limit[MHz]	Verdict
DH5	Ant1	2402	0.954	2401.538	2402.492	---	---
DH5	Ant1	2441	0.957	2440.538	2441.495	---	---
DH5	Ant1	2480	0.963	2479.535	2480.498	---	---
2DH5	Ant1	2402	1.287	2401.376	2402.663	---	---
2DH5	Ant1	2441	1.290	2440.376	2441.666	---	---
2DH5	Ant1	2480	1.290	2479.376	2480.666	---	---
3DH5	Ant1	2402	1.302	2401.361	2402.663	---	---
3DH5	Ant1	2441	1.299	2440.361	2441.660	---	---
3DH5	Ant1	2480	1.296	2479.361	2480.657	---	---

DH5-Ant1-2402

DH5-Ant1-2441

DH5-Ant1-2480

2DH5-Ant1-2402

2DH5-Ant1-2441

2DH5-Ant1-2480

3DH5-Ant1-2402

3DH5-Ant1-2441

3DH5-Ant1-2480

Occupied Channel Bandwidth

TestMode	Antenna	Frequency[MHz]	OCB [MHz]	FL[MHz]	FH[MHz]	Limit[MHz]	Verdict
DH5	Ant1	2402	0.88277	2401.5648	2402.4476	---	---
DH5	Ant1	2441	0.88602	2440.5635	2441.4495	---	---
DH5	Ant1	2480	0.87878	2479.5664	2480.4452	---	---
2DH5	Ant1	2402	1.1785	2401.4161	2402.5946	---	---
2DH5	Ant1	2441	1.1796	2440.4176	2441.5972	---	---
2DH5	Ant1	2480	1.1777	2479.4183	2480.5960	---	---
3DH5	Ant1	2402	1.1828	2401.4166	2402.5994	---	---
3DH5	Ant1	2441	1.1862	2440.4146	2441.6008	---	---
3DH5	Ant1	2480	1.1836	2479.4155	2480.5991	---	---

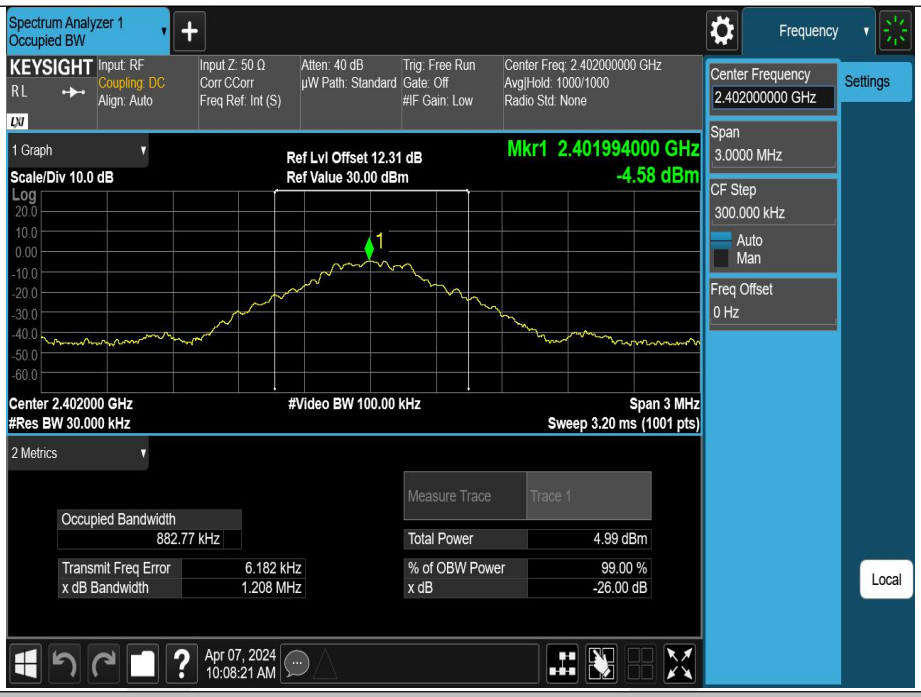

DH5-Ant1-2402

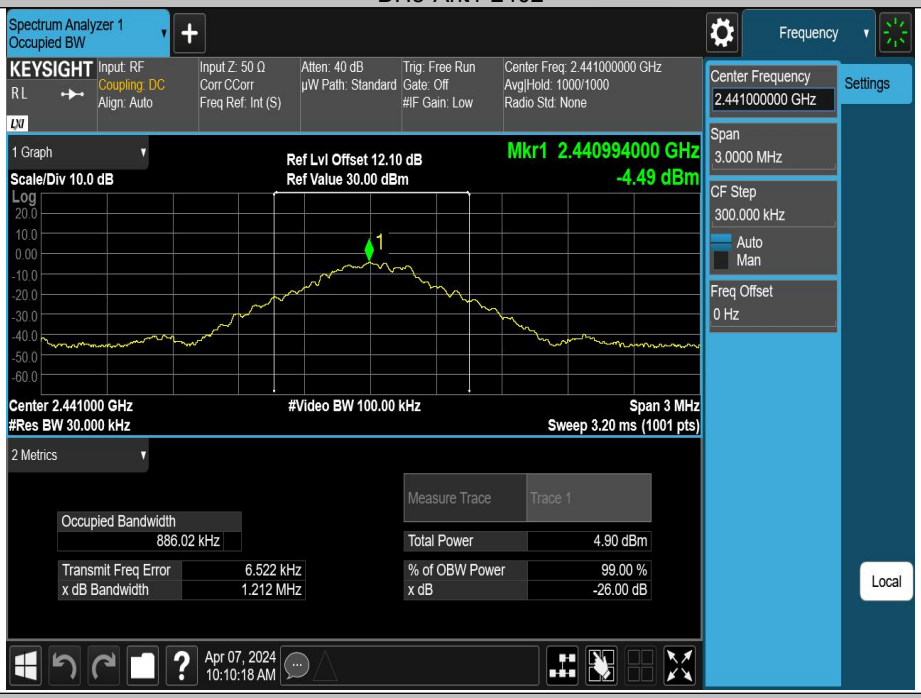

DH5-Ant1-2441

DH5-Ant1-2480

2DH5-Ant1-2402

2DH5-Ant1-2441

2DH5-Ant1-2480

3DH5-Ant1-2402

3DH5-Ant1-2441

3DH5-Ant1-2480

9.2 CARRIER FREQUENCY SEPARATION

9.2.1 Applicable Standard

According to FCC Part 15.247(a)(1) and KDB 558074 D01 15.247 MEAS GUIDANCE v05r02
According to IC RSS-247.5.1

9.2.2 Conformance Limit

Frequency hopping systems operating in the 2400-2483.5MHz band shall have hopping channel carrier frequencies separated by a minimum of 25kHz or the 20dB bandwidth of the hopping channel, whichever is greater.
In case of an output power less than 125mW, the frequency hopping system may have channels separated by a minimum of 25kHz or two-thirds of the 20dB bandwidth of the hopping channel, whichever is greater.

9.2.3 Test Configuration

Test according to clause 7.1 radio frequency test setup 1

9.2.4 Test Procedure

The EUT must have its hopping function enabled. Use the following spectrum analyzer settings:
Set the RBW =300kHz. Set VBW =300kHz.
Set the span = wide enough to capture the peaks of two adjacent channels
Set Sweep time = auto couple.
Set Detector = peak. Set Trace mode = max hold.
Allow the trace to stabilize. Use the marker-delta function to determine the separation between the peaks of the adjacent channels. The limit is specified in one of the subparagraphs of this Section. Submit this plot.

Test Results

Temperature:	25° C
Relative Humidity:	45%
ATM Pressure:	1011 mbar

Note: For Limit = 20dB bandwidth * 2/3

TestMode	Antenna	Frequency[MHz]	Result[MHz]	Limit[MHz]	Verdict
DH5	Ant1	Hop	0.974	≥0.963	PASS
2DH5	Ant1	Hop	0.992	≥0.860	PASS
3DH5	Ant1	Hop	0.98	≥0.868	PASS

DH5-Ant1-Hop-PASS

2DH5-Ant1-Hop-PASS

3DH5-Ant1-Hop-PASS

9.3 NUMBER OF HOPPING FREQUENCIES

9.3.1 Applicable Standard

According to FCC Part 15.247(a)(1) and KDB 558074 D01 15.247 MEAS GUIDANCE v05r02
According to IC RSS-247.5.1

9.3.2 Conformance Limit

Frequency hopping systems operating in the 2400-2483.5MHz band shall use at least 15 channels.

9.3.3 Test Configuration

Test according to clause 7.1 radio frequency test setup 1

9.3.4 Test Procedure

The EUT must have its hopping function enabled. Use the following spectrum analyzer settings:
Span = the frequency band of operation (2400-2483.5MHz)
RBW = 300KHz
VBW ⩾ RBW
Sweep = auto
Detector function = peak
Trace = max hold
Allow the trace to stabilize. It may prove necessary to break the span up to sections, in order to clearly show all of the hopping frequencies.

Test Results

Temperature:	25° C
Relative Humidity:	45%
ATM Pressure:	1011 mbar

Note: N/A

TestMode	Antenna	Frequency[MHz]	Result[Num]	Limit[Num]	Verdict
DH5	Ant1	Hop	79	≥15	PASS
2DH5	Ant1	Hop	79	≥15	PASS
3DH5	Ant1	Hop	79	≥15	PASS

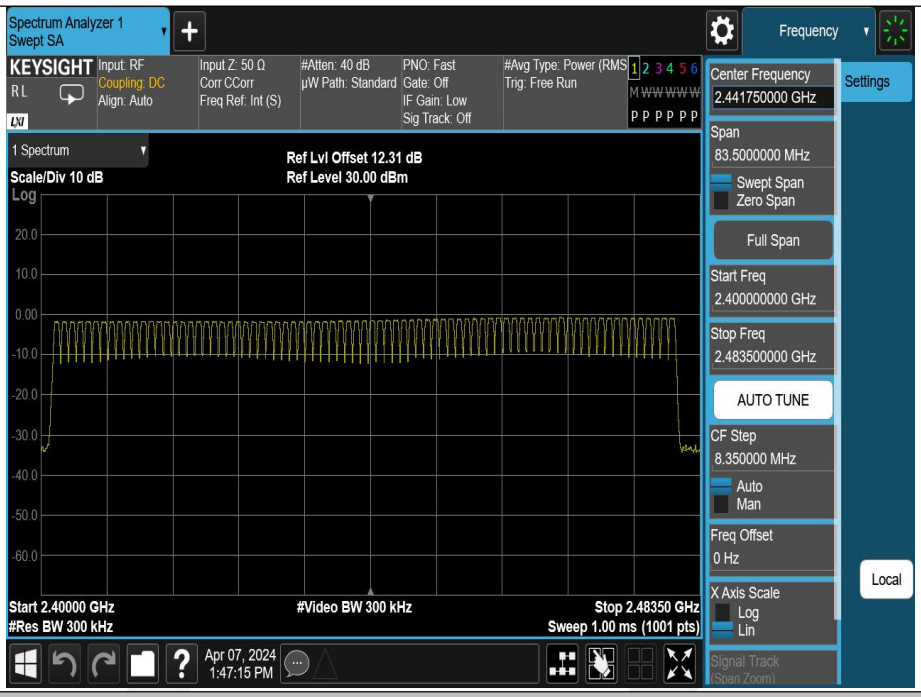

DH5-Ant1-Hop-PASS

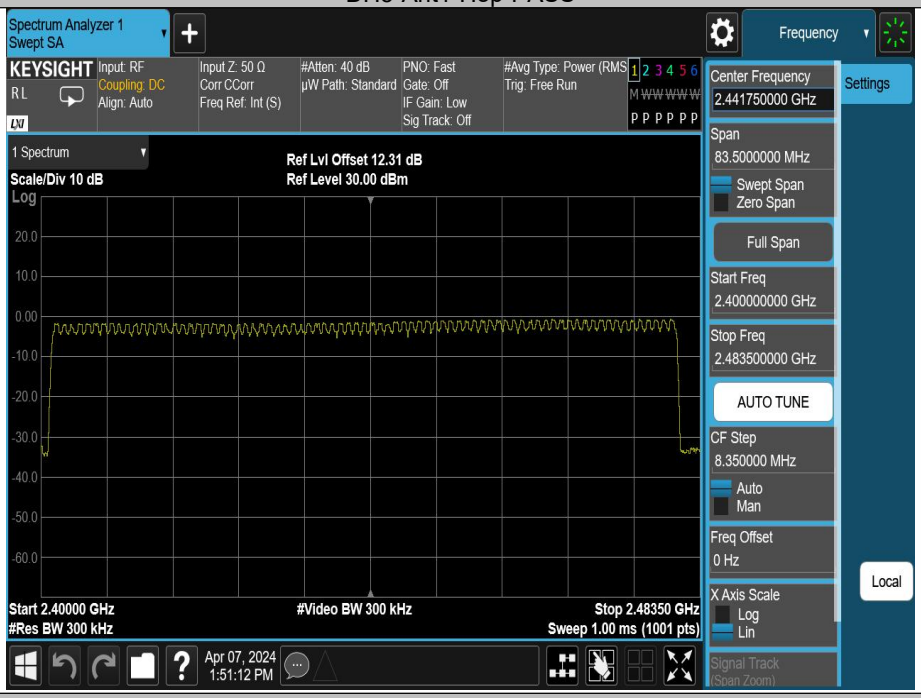

2DH5-Ant1-Hop-PASS

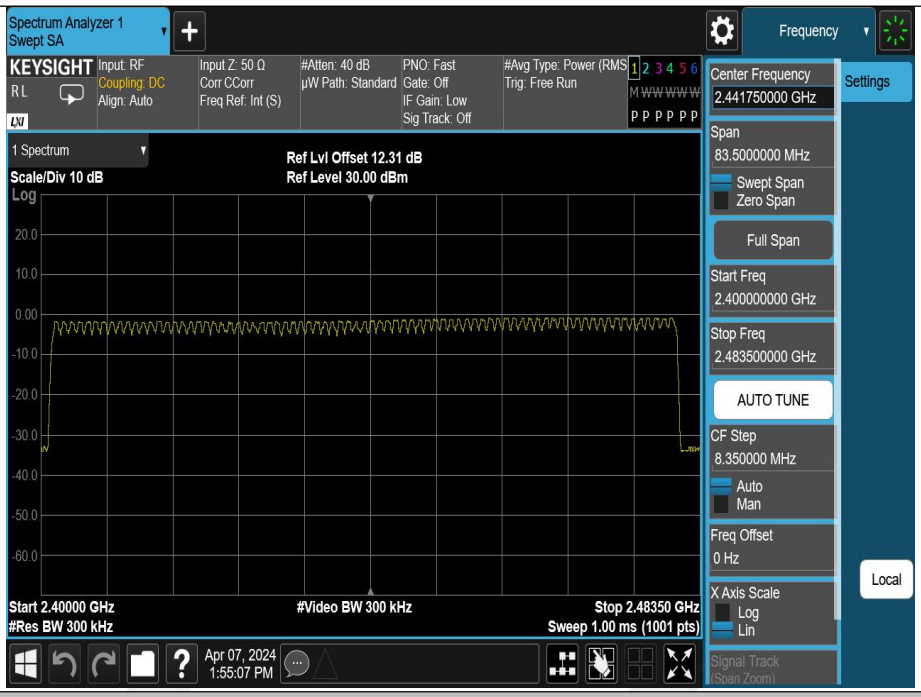

3DH5-Ant1-Hop-PASS

9.4 AVERAGE TIME OF OCCUPANCY (DWELL TIME)

9.4.1 Applicable Standard

According to FCC Part 15.247(a)(1) and KDB 558074 D01 15.247 MEAS GUIDANCE v05r02
According to IC RSS-247.5.1

9.4.2 Conformance Limit

For frequency hopping systems operating in the 2400-2483.5MHz band, the average time of occupancy on any channel shall not be greater than 0.4s within a period of 0.4s multiplied by the number of hopping channels employed.

9.4.3 Test Configuration

Test according to clause 7.1 radio frequency test setup 1

9.4.4 Test Procedure

The EUT must have its hopping function enabled. Use the following spectrum analyzer settings:
Span = zero span, centered on a hopping channel
RBW = 1 MHz
VBW ≥ RBW
Sweep = as necessary to capture the entire dwell time per hopping channel
Detector function = peak
Trace = max hold
If possible, use the marker-delta function to determine the dwell time. If this value varies with different modes of operation (e.g., data rate, modulation format, etc.), repeat this test for each variation. The limit is specified in one of the subparagraphs of this Section.

9.4.5 Test Results

Temperature:	25° C
Relative Humidity:	45%
ATM Pressure:	1011 mbar

Note: TotalHops(DH1)=(1600/2/79)*31.6
TotalHops(DH3)=(1600/4/79)*31.6
TotalHops(DH5)=(1600/6/79)*31.6
Dwell Time= BurstWidth* TotalHops

TestMode	Antenna	Frequency[MHz]	BurstWidth [ms]	TotalHops [Num]	Result[s]	Limit[s]	Verdict
DH1	Ant1	Hop	0.380	320	0.122	≤0.4	PASS
DH3	Ant1	Hop	1.637	160	0.262	≤0.4	PASS
DH5	Ant1	Hop	2.884	106.67	0.308	≤0.4	PASS
2DH1	Ant1	Hop	0.390	320	0.125	≤0.4	PASS
2DH3	Ant1	Hop	1.642	160	0.263	≤0.4	PASS
2DH5	Ant1	Hop	2.889	106.67	0.308	≤0.4	PASS
3DH1	Ant1	Hop	0.389	320	0.124	≤0.4	PASS
3DH3	Ant1	Hop	1.640	160	0.262	≤0.4	PASS
3DH5	Ant1	Hop	2.891	106.67	0.308	≤0.4	PASS

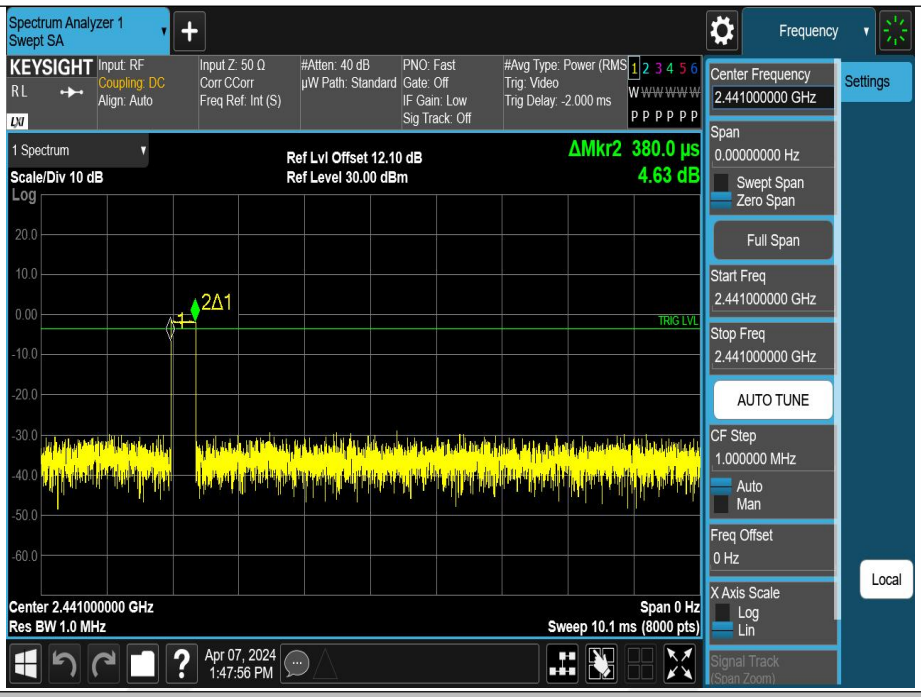

DH1-Ant1-Hop-PASS

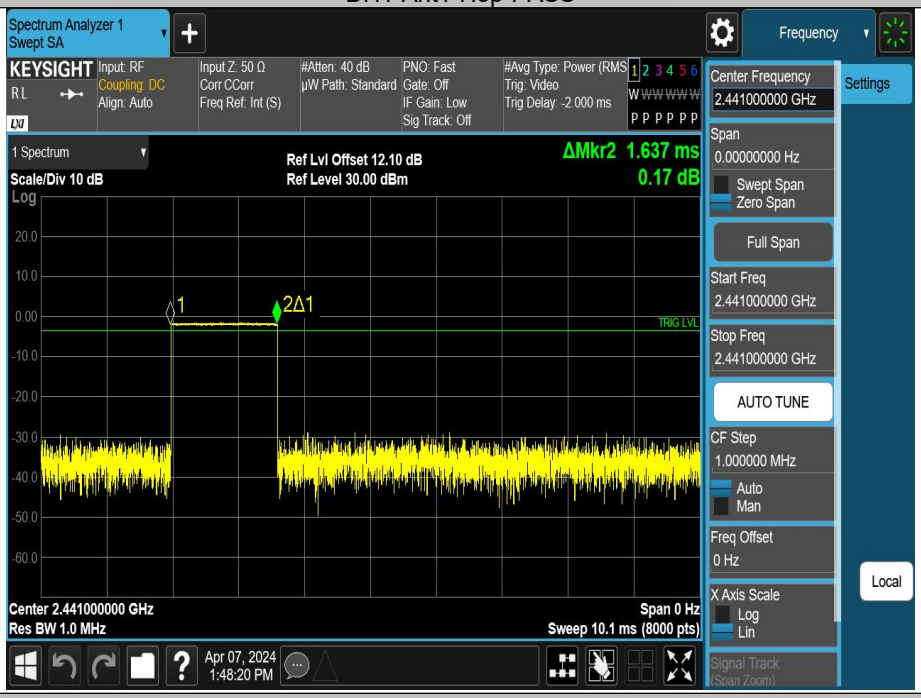

DH3-Ant1-Hop-PASS

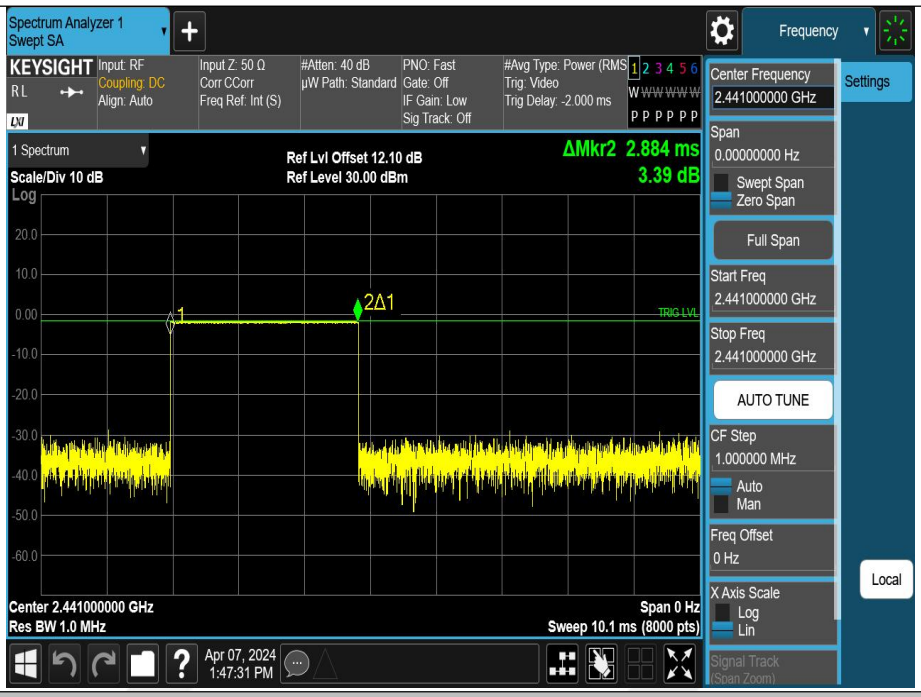

DH5-Ant1-Hop-PASS

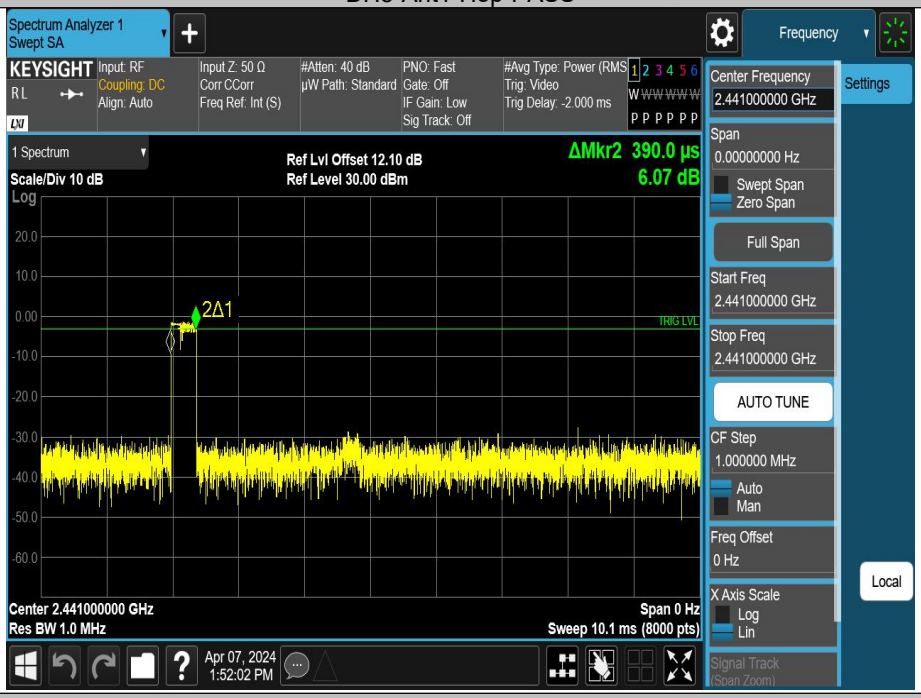

2DH1-Ant1-Hop-PASS

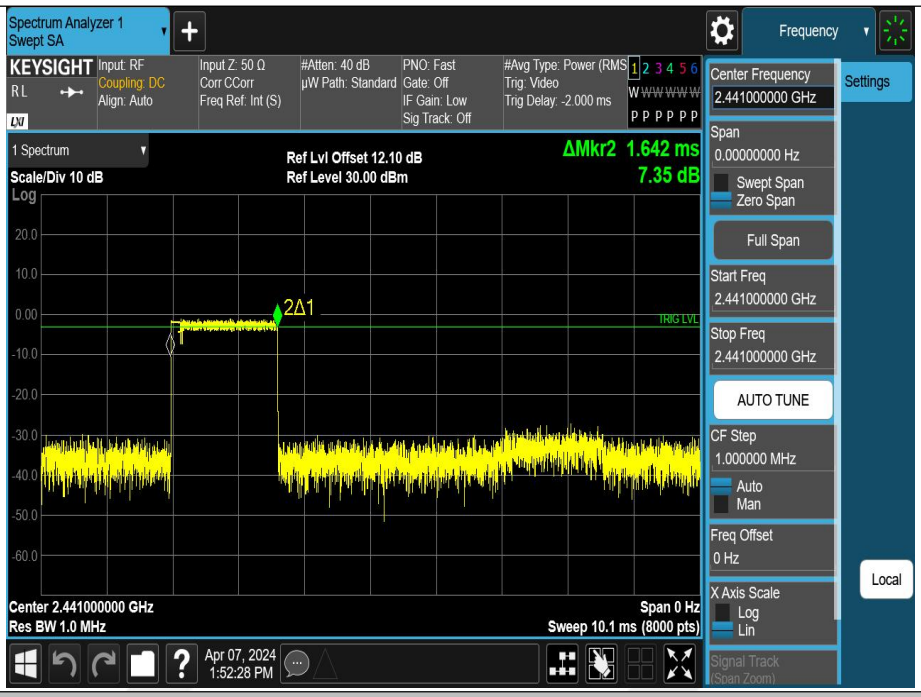

2DH3-Ant1-Hop-PASS

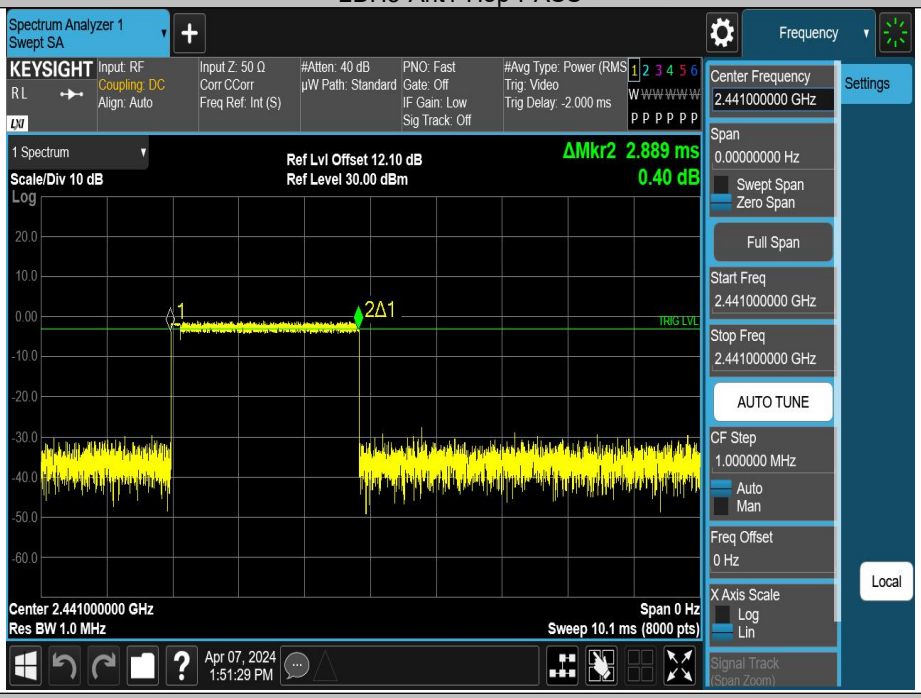

2DH5-Ant1-Hop-PASS

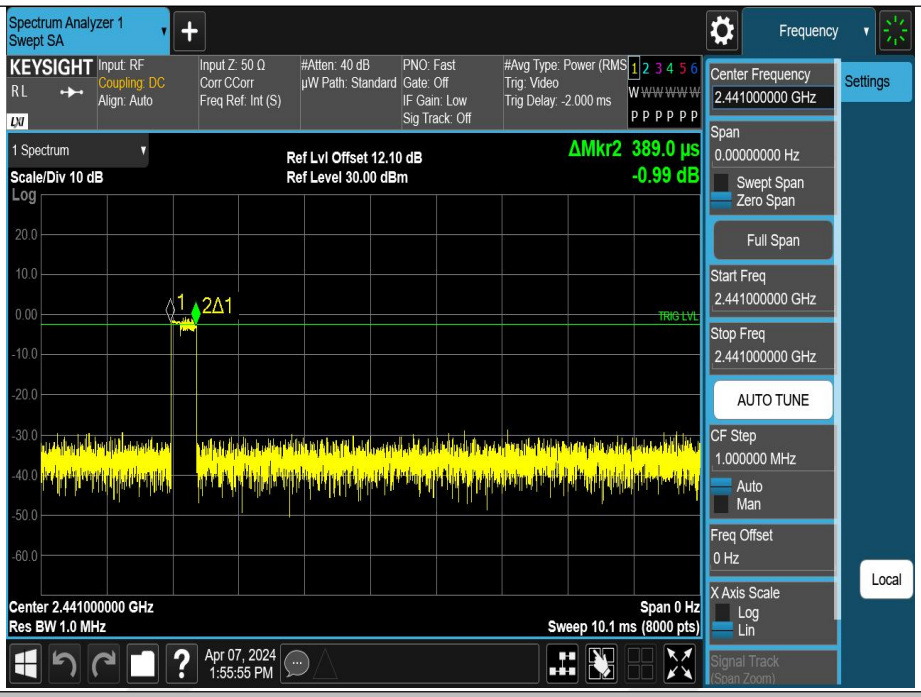

3DH1-Ant1-Hop-PASS

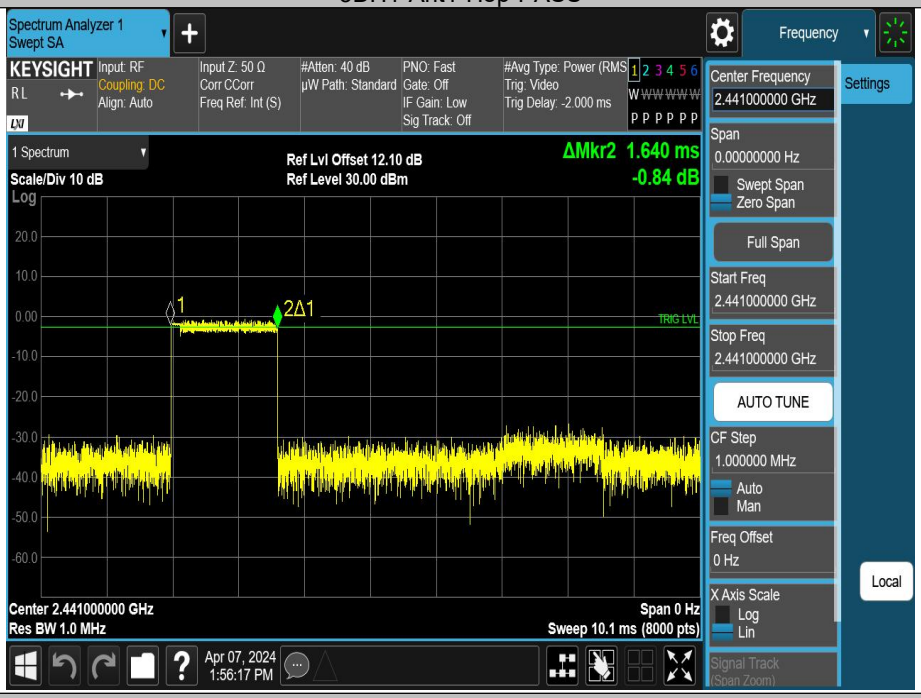

3DH3-Ant1-Hop-PASS

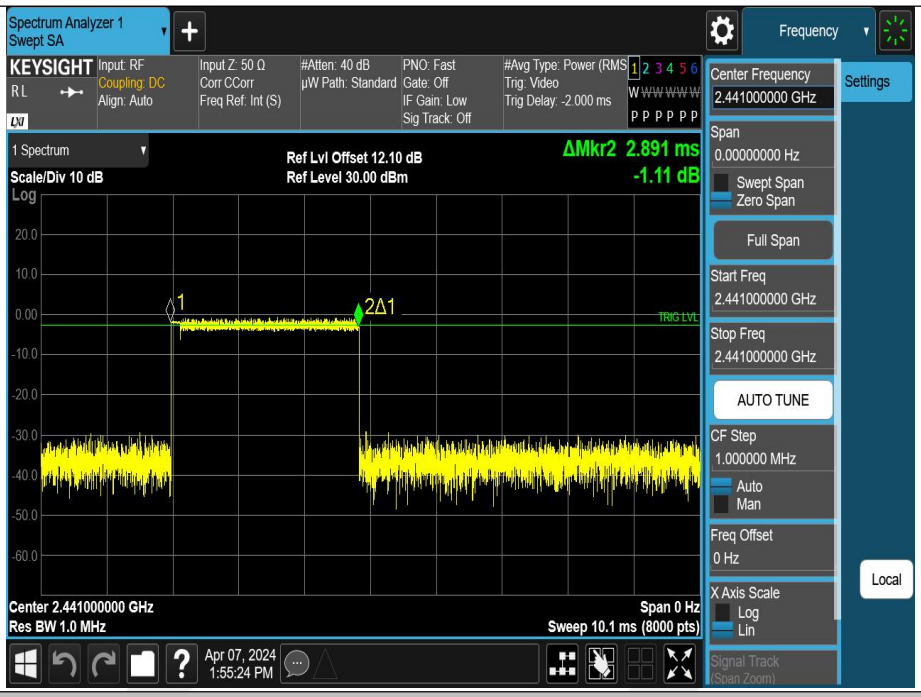

3DH5-Ant1-Hop-PASS