FCC Part 15
Transmitter Certification

Test Report

FCC ID: SPI-4XXKPMR

FCC Rule Part: 15.209

ACS Report Number: 05-0270-15C

Manufacturer: Single Access Lock Inc.
Model: 4XXKP/MR

Installation Guide(s)

Installation Instructions For
Profile Series Hardwired Networked
v.S1 Cylindrical Lock

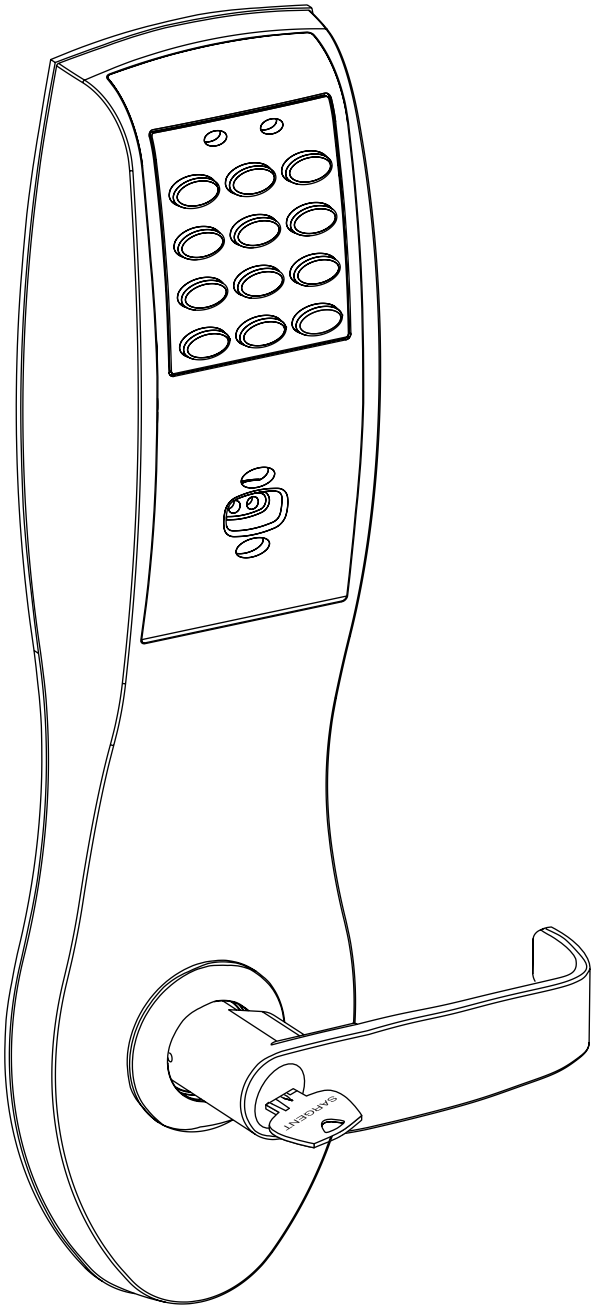

A7763A
10/04

SARGENT®

Table of Contents

Page

1 Warning
2 General Description.....1
3 Specifications.....1
4 Features 1
5 Parts Breakdown 2-3
6 Installation Instructions.....4-9
7 Operational Check.....10

1 Warning

Warning: Changes or modifications to this unit not expressly approved by the party responsible for compliance could void the user's authority to operate the equipment.

This device complies with Part 15 of the FCC Rules. Operation is subject to the following two conditions: (1) this device may not cause harmful interference, and (2) this device must accept any interference received, including interference that may cause undesired operation.

Note: This equipment has been tested and found to comply with the limits for a Class B digital device, pursuant to Part 15 of the FCC Rules. These limits are designed to provide reasonable protection against harmful interference in a residential installation. This equipment generates, uses and can radiate radio frequency energy and if not installed and used in accordance with the instructions, may cause harmful interference to radio communications. However, there is no guarantee that the interference will not occur in a particular installation. If this equipment does cause harmful interference to radio or television reception, which can be determined by turning the equipment off and on, the user is encouraged to try to correct the interference by one or more of the following measures:

- Reorient or relocate the receiving antenna
- Increase the separation between the equipment and receiver
- Connect the equipment into an outlet on a circuit different from that to which the receiver is connected
- Consult the dealer or an experienced TV technician for help

This Class B digital apparatus complies with Canadian ICES-003.

Cet appareil numérique de la classe B est conforme avec la norme NMB-003 du Canada.

Warning To comply with “Fire Listed” doors, battery operated units must be replaced with alkaline batteries only.

2 General Description

The SARGENT Profile Series v.S1 Keypad Cylindrical Lock is designed for areas which require stand alone authorized entry. It is a self-contained microprocessor-controlled keypad with non-volatile memory. The keypad will hold a total of 2000 (S1-LU, S1-PK, S1-PA) different user codes.

This product is operated by six (6) “AA” alkaline batteries or by the SARGENT 3267 9VDC power supply.

3 Specifications

- Latch – 1/2" standard
  3/4" throw fire-rated double doors (optional) (41- prefix)
- Deadlocking latch
- Outside lever controlled by keypad, or key retracts latch
- Inside lever retracts latch
- Locks furnished for 1-3/4" doors only
- U.L. Listed

4 Features

- Non volatile memory
- Motor driven, battery operated
- Battery operated with 6 “AA” alkaline batteries
- Low battery alert–4 chirps after code entry
- Optional external power, sargent 3267 9vdc power supply
- External remote “request to enter”
- ~~Master,~~ Emergency or Supervisory code will unlock door when low battery has expired
- 2000 (S1-LU, S1-PK, S1-PA) users
- Programming is done at a central computer for monitoring and access control of each door via a gateway and network wiring using TekControl™ software
- Pin Code, Proximity Card, Fob are optional
- Operates utilizing ~~any two~~ to six digits per code. ~~Digits may be repeated and codes may start with zero~~
- Cylinder override
- Entry of three wrong User Codes disables all codes for ten seconds. Yellow LED on solid
- Piezo horn can be heard with each keystroke or turned off ~~by Master or Supervisory Code~~

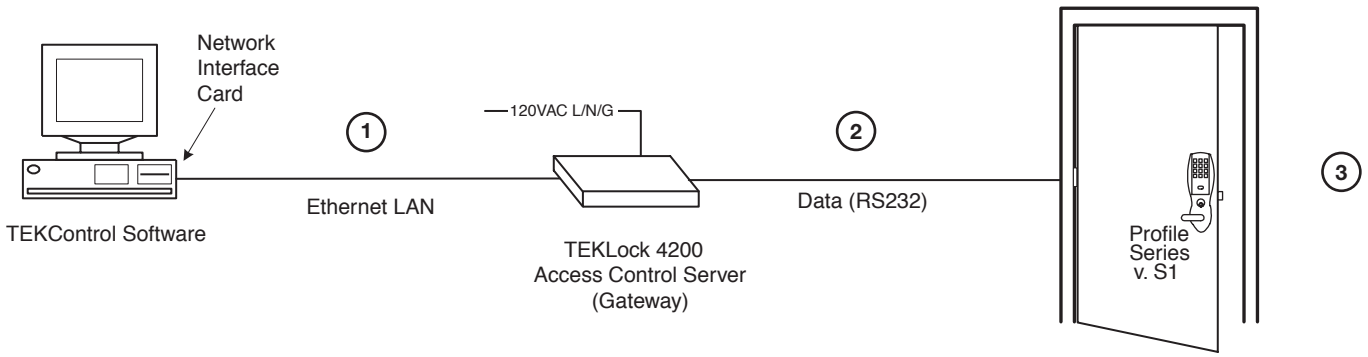

5 Parts Breakdown

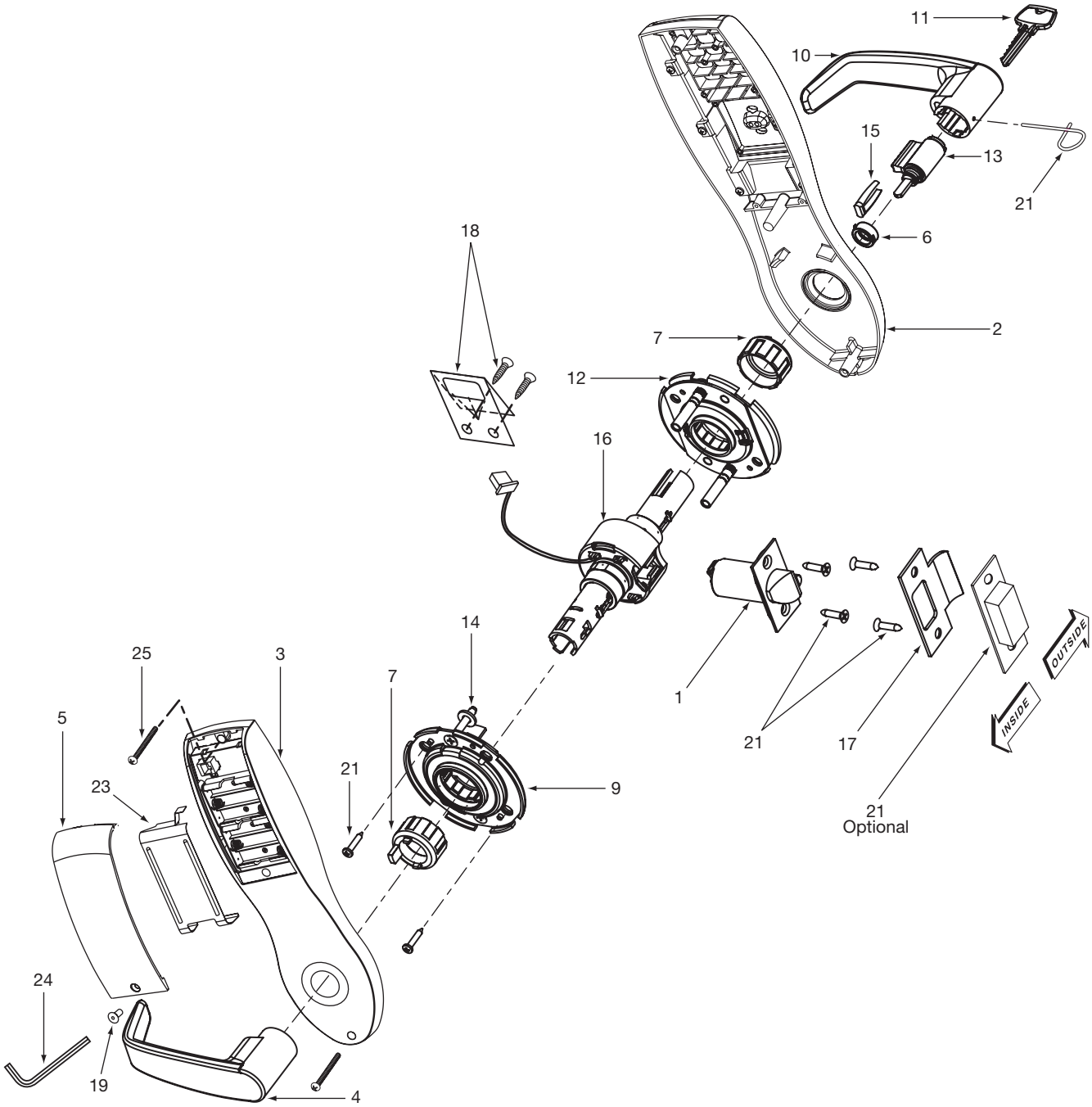

ITEM	PART No.	DESCRIPTION	REQ'D
1	10-2000	2-3/4" Backset Latch (Standard)	1
	10-2053	3-3/4" Backset Latch (23 Prefix)	1
	10-2058	5" Backset Latch (25 Prefix)	1
	10-2634	3/4" Throw (41 Prefix)	1
2	10-3136	Outside Escutcheon Key Pad, Key Pad/Prox (S1-LU, S1-PK)	1
	10-3137	Outside Escutcheon Prox Only (S1-PA)	1
	10-3016	Outside Escutcheon Housing Only	1
	52-2432	Key Pad/Proximity Bezel Assembly w/ Harness (S1-LU, S1-PK)	1
	52-2431	Prox Only Bezel Assembly w/ Harness/(S1-PA)	1
3	10-3132	Inside Escutcheon and 2000 User Controller (S1-LU)	1
	10-3133	Inside Escutcheon and Key Pad/Prox or Prox Only Controller (S1-PA, S1-PK)	1
	10-3015	Inside Escutcheon Housing Only	1
	52-2891	2000 User Key Pad Controller Assembly (S1-LU)	1
	52-2892	2000 User Prox Only or Prox Key Pad Controller Assy. (S1-PA, S1-PK)	1
4	10-0523	"B" Inside Lever/Passage	1
	10-2204	"J" Inside Lever/Passage **NOTE: Coastal Levers & Cylinders other than Standard— See 10 Line Parts Pages**	1
	10-0501	"L" Inside Lever/Passage	1
	10-0545	"P" Inside Lever/Passage	1
	10-0534	"B" Inside Lever (75- Handicap Warning)	1
	10-2245	"J" Inside Lever (75- Handicap Warning)	1
	10-0512	"L" Inside Lever (75- Handicap Warning)	1
	10-0556	"P" Inside Lever (75- Handicap Warning)	1
5	52-0170	Battery Cover Only	1
6	10-0019	Cylinder Spacer	1
7	10-0792	Spacer Bushing	2
9	10-3048	Inside Rose Spring Assembly	2
10	10-0524	"B" Outside Lever Standard Cylinder	1
	10-2205	"J" Outside Lever Standard Cylinder	1
	10-0502	"L" Outside Lever Standard Cylinder	1
	10-0546	"P" Outside Lever Standard Cylinder	1
	10-0525	"B" OutsideLever (30- To Accept Schlage Cylinder)	1
	10-2206	"J" Outside Lever (30- To Accept Schlage Cylinder)	1
	10-0503	"L" Outside Lever (30- To Accept Schlage Cylinder)	1
	10-0547	"P" Outside Lever (30- To Accept Schlage Cylinder)	1
	10-1535	"B" Outside Lever Standard Cylinder (76- Handicap Warning)	1
	10-2246	"J" Outside Lever Standard Cylinder (76- Handicap Warning)	1
	10-0513	"L" Outside Lever Standard Cylinder (76- Handicap Warning)	1
	10-0557	"P" Outside Lever Standard Cylinder (76- Handicap Warning)	1
11		Key (Provided with Cylinder)	
12	10-3049	Outside Rose Spring Assembly	1
13	13-3266	Cylinder (Standard)	1
	13-3613	Schlage (SC) Cylinder (95-(SC))	1
	13-3614	Schlage (SE) Cylinder (95-(SE))	1
	10-0019	Schlage (SC, SE & Signature) Cylinder Spacer	1
	13-3491	Cylinder (22-Construction)	1
	13-3713	Cylinder (10-Signature)	1
	13-3871	Cylinder (10-21 Signature Construction)	1
	13-3944	Cylinder (21-Cylinder)	1
	18-4020	Cylinder (VA-ASSA V10)	1
	18-4063	Cylinder (VS-ASSA V10)	1
14	01-9170	Screws for Through-Bolts (#10-32 x 1-3/4")	1
15	10-0312	Cylinder Retainer - All Cylinders except Removeable and Interchangeable core	1
	10-0313	Cylinder Retainer - Removeable Core or Interchangeable Core	1
16	10-2642	77 Lock Body (Std, 10, 21, 23, 30, SC, SE, VA & VS Prefixes only)	1
	10-2643	77 Lockbody (60, 63, 64 Prefixes only)	1
	10-2644	77 Lockbody (70, 72, 65-73, 65-73P Lockbody)	1
17	08-0312	#800 Strike	1
	08-0066	#808 Strike (28-Prefix)	1
18	52-0033	Fire Stop Plate and Screws (2)	1
19	45-1340	Flat Head Screw (Security)	1
20	52-2300	Screw Pack (includes item #'s 18, 19, 24, 25)	1
	01-0297	1/8" Security Socket Allen Wrench (item 24)	1
21	10-2052	Screw Pack – Specify Finish (Strike Screws, Latch Screws, Push Pin Tool, Strike Box)	1
23	52-0253	Battery Keeper	1
24		See Item # 20 Screw Pack	
25		See Item # 20 Screw Pack	
26	52-3010	Power/Data Cable (Not Shown)	1
27	52-3211	Door Position Harness (Not Shown)	1
28	52-2847	Weather Conduit (Not Shown)	1

6 Installation Instructions

1. Verify Hand and Bevel of Door

Stand on outside/locked side of the door when determining the door hand

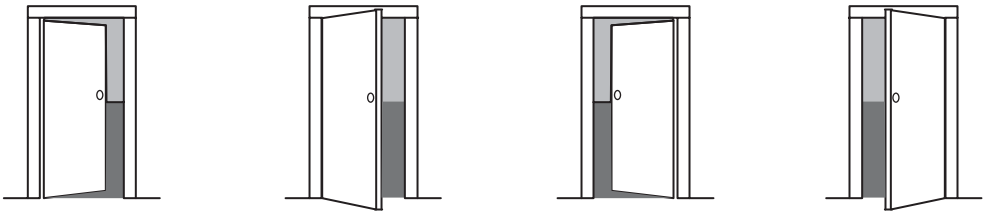

Left Hand
Hinges Left.
Open inward.
"LH"

Left Hand
Reverse Bevel
Hinges Left.
Open Outward
"LHRB"

Right Hand
Hinges Right
Open Inward.
"RH"

Right Hand
Reverse Bevel
Hinges Right.
Open Outward.
"RHRB"

2. Door Preparation

Prepare door according to appropriate template
(see website www.sargentlock.com):

- For metal door template, see 4531 and 4532
- For wood door template, see A7456, A6719D and 4540A
- Prior to installation, all holes must be free of burrs, debris and sharp edges
- If doors are not properly reinforced per ANSI115.2, commercially available reinforcements should be installed

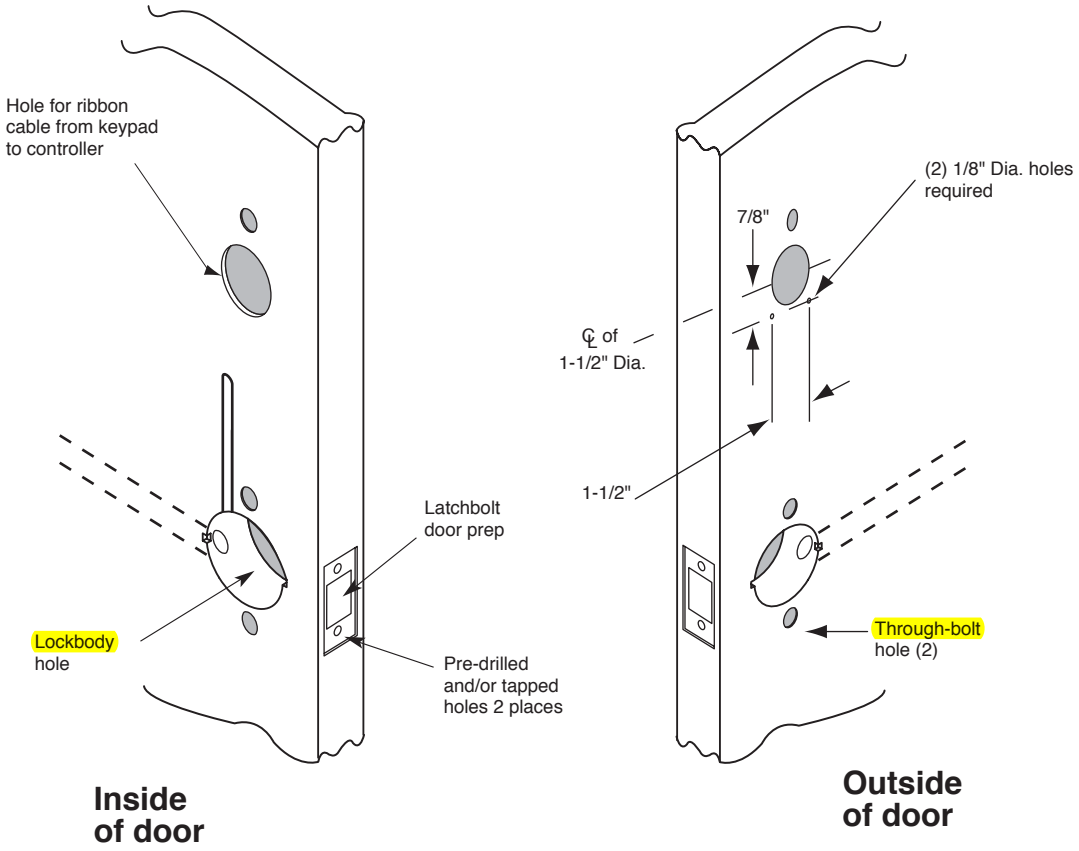

Wood Door Preparation

3. Frame Preparation for Strike

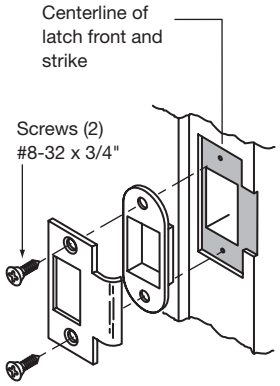

4. Latchbolt and Fire Stop Plate Installation

1. Install latch with beveled bolt facing the strike.
2. Attach with two screws but **DO NOT** tighten completely at this time.
3. Attach Fire Stop Plate with two screws.

Note: Required for all Fire Rated doors

Fire Rated Doors– Install Fire Stop Plate (P/N 52-0033) as shown below

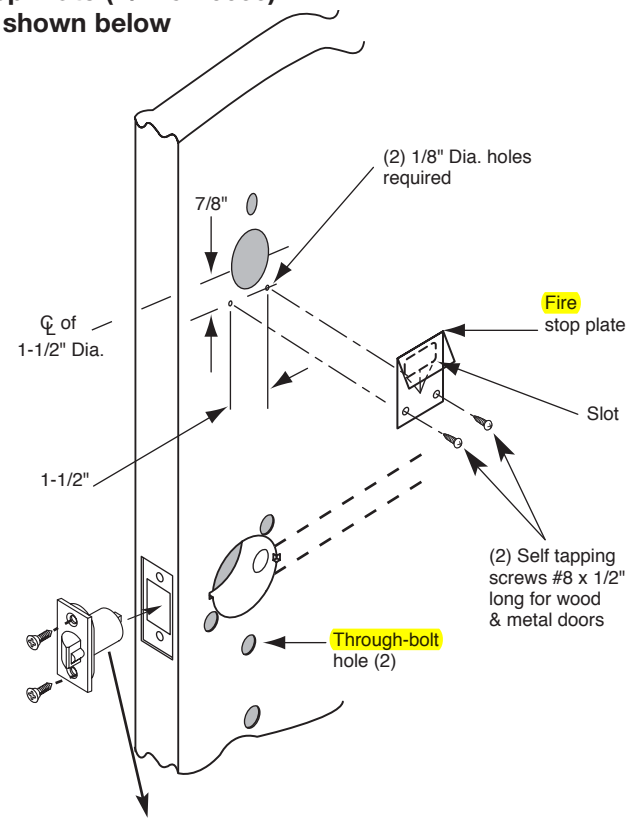

IMPORTANT: Latch bevel must match door bevel and deadlocking latch must stop on strike when door is closed

Non Fire Rated Exterior Doors– Install Weather Conduit (P/N 52-2847) as shown below

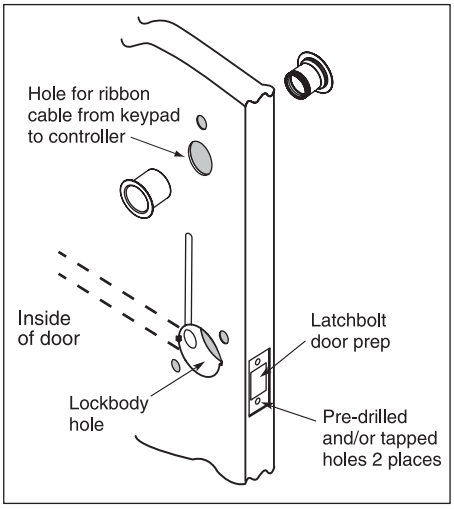

5. Lock Installation

Lock Preset to:

- Through-bolt location– 12 & 6 o'clock
- Door thickness– 1-3/4" thick- see below for other door conditions

Adjustment for different through-bolt and door thickness:

- Through-bolt location– rotate outside rose to match door
- Door thickness– rotate outside rose to align door thickness marking with lockbody edge
- Spacer bushing– remove and realign to fit into back of lever

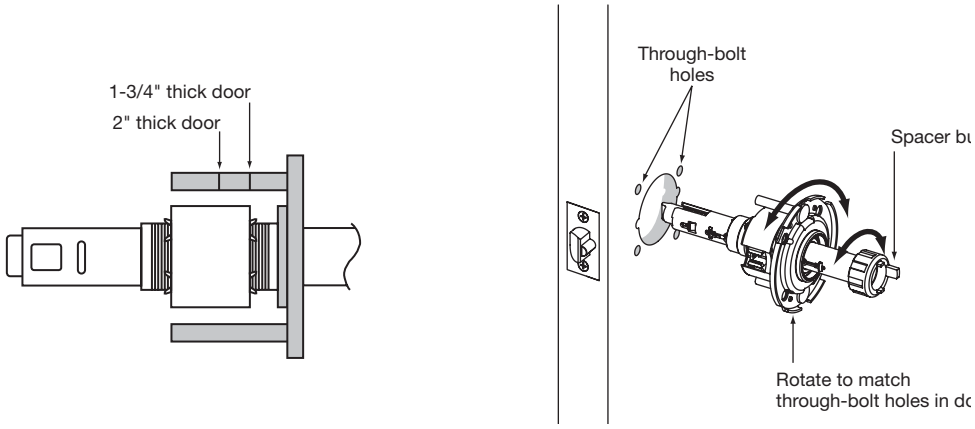

1. Feed wires into the lock body hole, from outside of door.
2. Lock body into cross-bore hole from outside of the door (locked side).
3. Lock body must engage both the latch unit prongs and tail piece, as shown.

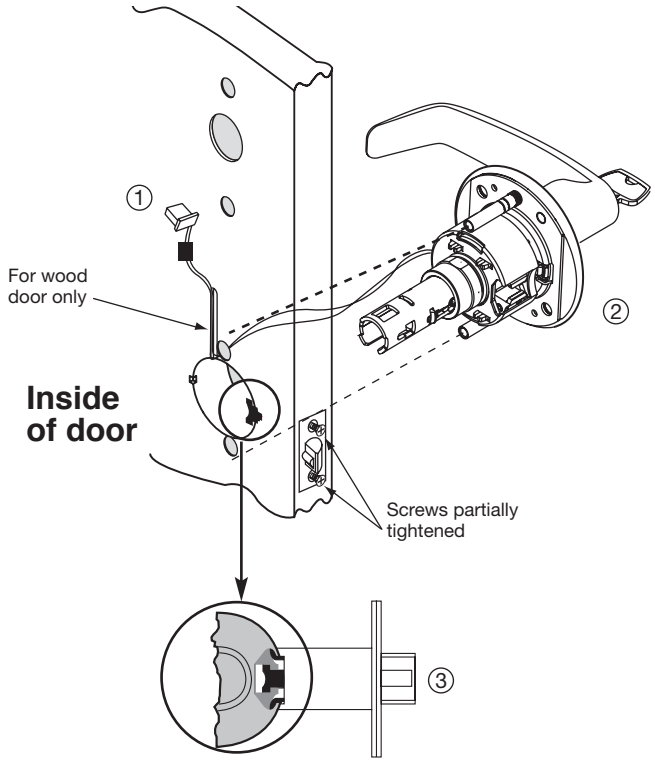

IMPORTANT:
Door must remain open during installation. Use door stop.

IMPORTANT:
Lockbody must be centered in the door

6. Securing the Lock to Door

1A. If wood door, feed wires up through the routed channel as shown.

1B. If metal door, feed wire and connector through inside of door and out hole on outside of door. *

2. Attach inside rose assembly and spacer bushing and secure with screws shown.

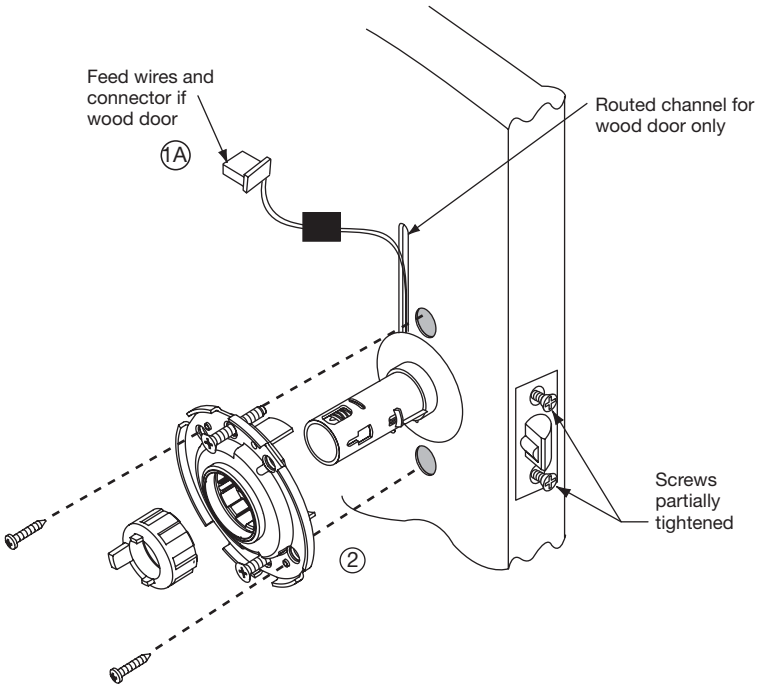

7. Remove Outside Lever Only

1. Insert key, rotate 45° clockwise and hold.
2. Depress lever retainer with push pin tool (provided).

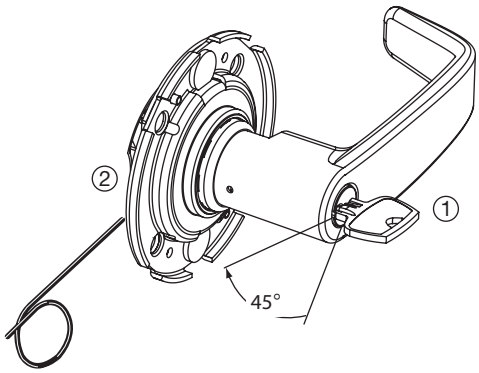

How to Change Cylinder (if required)

1. With outside lever in hand- use standard pliers, pull out cylinder retainer.
2. Remove key and cylinder from lever.
3. Insert new cylinder.*
4. Secure by pressing cylinder retainer flush with self.*

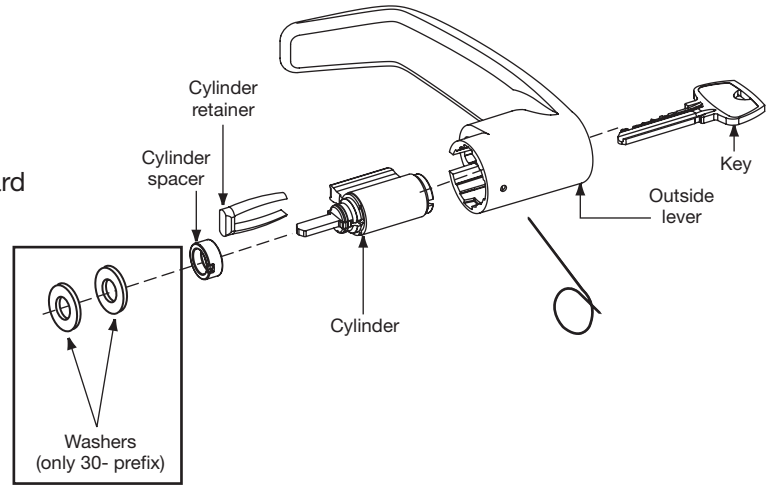

* NOT SHOWN

8. Installation of Outside Escutcheon and Lever

NOTE: For exterior applications, use weather seal gasket part # (10-0649) between escutcheon and outside door surface

1A. For fire rated doors only feed ribbon cable connector and ground wire from outside of door through weather seal gasket (if used) then fire stop plate.

1B. For non-fire rated doors only, feed ribbon cable connector and ground wire from outside of door through weather seal gasket (if used), then conduit sleeve in door (not shown).*

2. Slide the outside escutcheon over the lock, and hold the escutcheon to the door surface.

3. Verify white plastic cylinder spacer is inserted into horizontal slot of lockbody.*

4. Slide the outside lever onto tube with key horizontal (toward latch). Rotate key 45 degress clockwise.

5. Push lever until lever catch is engaged.

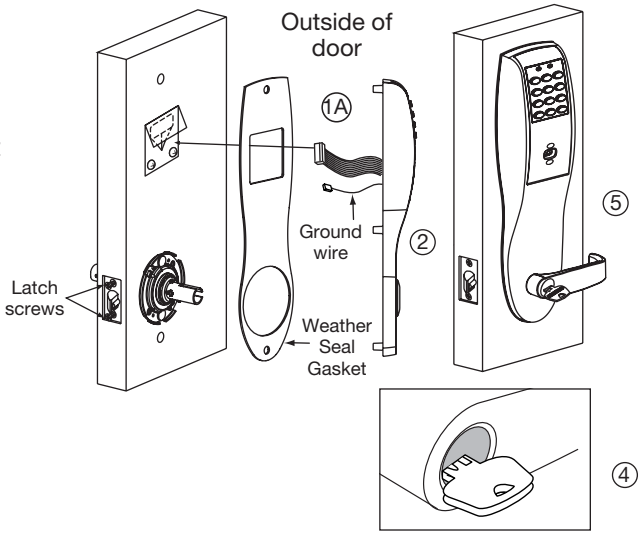

9. Inside Escutcheon and Lever

1. Remove black battery cover from the escutcheon with security wrench (provided).
2. Connect ground wire to terminal E3 (Fig. 1), connect keypad harness (Fig. 2) to controller, and connect lock body motor harness (Fig. 3) to motor connector.
3. Feed all excess wire through inside door hole and/into outside escutcheon cavity, being careful not to pinch wires.

NOTE: Connectors go on only one way, do not offset connector and be sure they are completely sealed.

4. Insert two #8-32 screws (Fig. 2) through top and bottom of inside escutcheon and thread into outside escutcheon. Straighten escutcheons and tighten securely, being careful to avoid pinching wires.
5. Slide the Inside Lever onto the tube.
6. Tighten two latch screws completely.

Figure 1

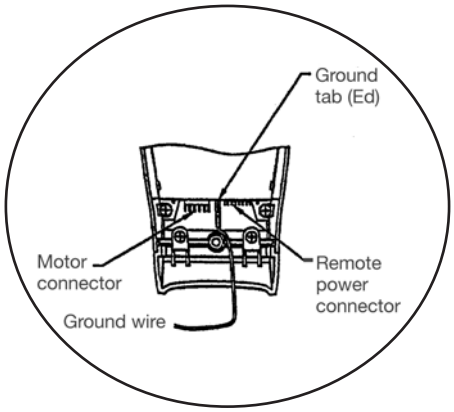

Figure 2

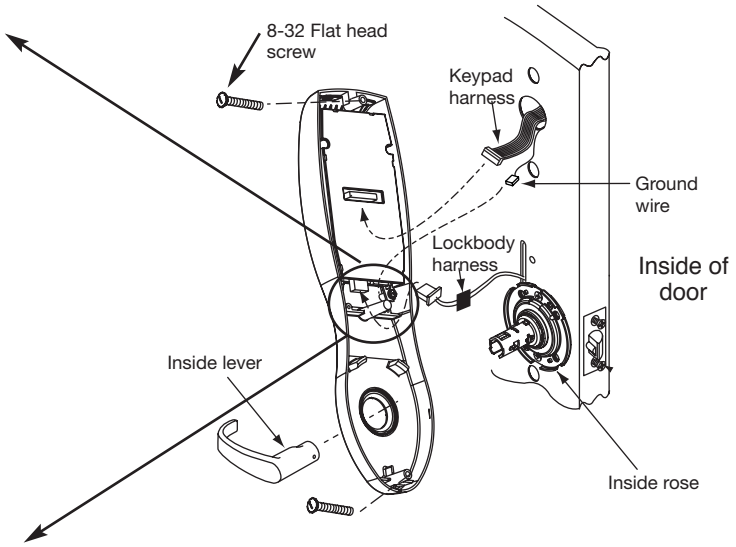

Figure 3

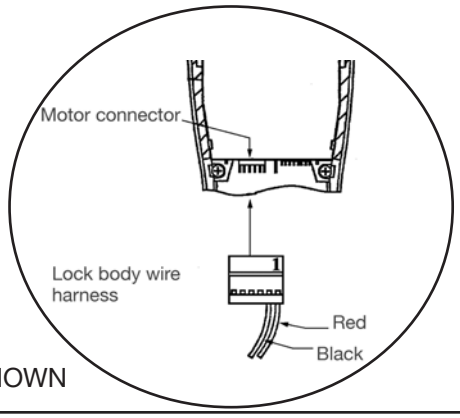

* NOT SHOWN