NTPM99CA

Nortel Networks

WLAN Cable Access Point 6220

User Guide

Preliminary Release 1.0 Issue 2 Nov 2004

What's inside?

About this document
Overview
Planning your WLAN network
Installation
Configuration
Administration
Troubleshooting
Appendix

NORTEL NETWORKS™

Copyright © 2004 Nortel Networks

All rights reserved. July 2004.

No part of this publication may be reproduced, stored in a retrieval system, or transmitted in any form or by any means, whether electronic, mechanical, photocopying, recording or otherwise without the prior writing of the publisher.

Nortel Networks and the Nortel Networks logo are trademarks of Nortel Networks, Inc.

Multi-Region Product Documentation

This document may describe features that are not available in your region due to local regulations.

Compliances

Federal Communication Commission Interference Statement

This equipment has been tested and found to comply with the limits for a Class B digital device, pursuant to Part 15 of the FCC Rules. These limits are designed to provide reasonable protection against harmful interference in a residential installation. This equipment generates uses and can radiate radio frequency energy and, if not installed and used in accordance with instructions, may cause harmful and, if not installed and used in accordance with instructions, may cause harmful interference to radio communications. However, there is no guarantee that the interference will not occur in a particular installation. If this equipment does cause harmful interference to radio or television reception, which can be determined by turning the equipment off and on, the user is encouraged to try to correct the interference by one or more of the following measures:

. • Reorient the receiving antenna
. • Increase the separation between the equipment and receiver
. • Connect the equipment into an outlet on a circuit different from that to which the receiver is connected
. • Consult the dealer or an experienced radio/TV technician for help

FCC Caution: To assure continued compliance, (example - use only shielded interface cables when connecting to computer or peripheral devices). Any changes or modifications not expressly approved by the party responsible for compliance could void the user's authority to operate this equipment.

This device complies with Part 15 of the FCC Rules. Operation is subject to the following two conditions: (1) This device may not cause harmful interference, and (2) this device must accept any interference received, including interference that may cause undesired operation.

When installing the unit, choose a location that provides a minimum separation of 20 cm from all persons during normal operation.

The transmitted power of the APU and CSU does not exceed 36 dBm.

This transmitter must not be co-located or operating in conjunction with any other antenna or transmitter.

Publication history

August 2004
Issue 1. Issued for WLAN Cable Access Point 6220 Release 1

November 2004
Issue 2. Issued for WLAN Cable Access Point 6220 Release 1

Contents

ABOUT THIS DOCUMENT 5

OVERVIEW 13

INTRODUCTION 13
PRODUCT DESCRIPTION 15
APU (ACCESS POINT UNIT) 17
CSU (CORPORATE SERVICE UNIT) 22

PLANNING YOUR WLAN NETWORK 27

SITE SURVEY & PLANNING 28
WIRELESS NETWORK PLANNING 29

INSTALLATION 31

APU INSTALLATION & CONFIGURATION 34

PROCEDURE 1-1 34
PROCEDURE 1-2 35
PROCEDURE 1-3 40
PROCEDURE 1-4 41
PROCEDURE 1-5 43
PROCEDURE 1-6 50
PROCEDURE 1-7 51
PROCEDURE 1-8 53

CSU INSTALLATION & CONFIGURATION 55

PROCEDURE 2-1 56
PROCEDURE 2-2 58

CONFIGURATION 61

SOFTWARE INSTALLATION (AP CONFIGURATOR) 62
PROCEDURE 3-1 64
PROCEDURE 3-2 69
PROCEDURE 3-3 75
PROCEDURE 3-4 84
PROCEDURE 3-5 88
PROCEDURE 3-6 123

ADMINISTRATION 165

SAVE CONFIGURATION 166
LOAD NEW CONFIGURATION 167
LOAD NEW LICENSE 168

TROUBLESHOOTING 175

APPENDIX A. SPECIFICATION 182

APPENDIX B. DOCSIS SPECIFICATION 187

APPENDIX C. ANTENNA TYPE 189

NTA.2407 PANEL ANTENNA 189
NTA.2412 BIDIRECTIONAL ANTENNA 190
NTA.2400 OMNI DIRECTIONAL ANTENNA 191
ET-PR12 BUILT-IN PANEL ANTENNA 192

APPENDIX D. ENCLOSURE DIMENSION 193

APPENDIX E. SITE SURVEY 195

APPENDIX F. WIRELESS NETWORK PLANNING 206

About this document

This document describes the system features used in the WLAN Cable Access Point 6220 Release 1.0 Product.

Topics covered include the following:

- Overview
  - Introduction
  - Product Description
  - APU (Access Point Unit)
  - CSU (Corporate Services Unit)
- System Planning
  - Site Survey & Planning
  - Wireless Network Designing
- Installation
  - APU Hardware Installation
  - CSU Hardware Installation
- Configuration
  - APU in Hot Spot Mode (802.11b)
  - APU in Secure Data Mode (P2P, P2M)
  - CSU in Secure Data Mode (P2P, P2M)
  - Testing Connection between APU and CSU
- Advanced Configuration
  - System Administration Tasks
  - Save configuration
  - Edit configuration
  - Load new configuration
  - Upload new license
- Troubleshooting

Audience

The intended audience for this document includes:

- Installers
- Technicians
- Nnetwork planners
- Network & system engineers
- Network administrators

List of Abbreviations

AP	Access Point
APU	Access Point Unit
ARP	Address Resolution Protocol
BPDU	Bridge Protocol Data Unit
BPSK	Binary Phase-Shift Keying
CATV	Community Antenna Television
CM	Cable Modem
CMTS	Cable Modem Termination System
CPE	Customer Premises Equipment
CSU	Corporate Service Unit
DBPSK	Differential Binary Phase-Shift Keying
DHCP	Dynamic Host Configuration Protocol
DOCSIS	Data Over Cable Service Interface Specifications
DQPSK	Differential Quadrature Phase Shift Keying
DVM	Digital Volt Ohm Meter
EAP	Extensible Authentication Protocol
EIRP	Equivalent Isotropic Radiated Power
EMI	Electromagnetic Interference
FCC	Federal Communications Commission
FCS	Frame Check Sequence
FTP	File Transfer Protocol
HFC	Hybrid Fiber Coax
ICMP	Internet Control Message Protocol
IEEE	Institute of Electrical and Electronics Engineers
ISM	Industrial Scientific and Medical equipment
ISP	Internet Service Provider
ITU	International Telecommunication Union
LOS	Line of Sight
MAC	Media Access Control
MIB	Management Information Base
NAS	Network Access Server
NAT	Network Address Translation

NLOS	Non Line of Sight
NMS	Network Management System
NWID	Network ID
OLOS	Optical Line of Sight
ONU	Optical Network Unit
PCMCIA	Personal Computer Memory Card International Association
PI	Power Inserter
POE	Power over Ethernet
PSU	Power Supply Unit
QAM	Quadrature Amplitude Modulation
QPSK	Quadrature Phase Shift Keying
RADIUS	Remote Authentication Dial-In User Services
RF	Radio Frequency
RIP	Routing Information Protocol
SEC	Super Ethernet Converter
SMTP	Simple Mail Transfer Protocol
SNMP	Single Network Management Protocol
SNR	Signal to Noise Ratio
SSID	Service Set Identification
TCP	Transmission Control Protocol
TLS	Transport Layer Security
TTL	Time to Live
UDP	User Datagram Protocol
UNII	Unlicensed National Information Infrastructure
UPS	Uninterruptible Power Supply
VLAN	Virtual Local Area Network
VSWR	Voltage Standing Wave Ratio
WEP	Wired Equivalent Privacy
Wi-Fi	Wireless Fidelity
WLAN	Wireless Local Area Network

Technical Support and Information

If you purchased a service contract for your Nortel Networks product from a distributor or authorized reseller, contact the technical support for that distributor or reseller for assistance.

If you purchased a Nortel Networks service program, contact Nortel Networks Technical Support as indicated in the following table.

Internet	**http://www.nortelnetworks.com/cgi-bin/comments/comments.cgi**	• Click on Technical Support • Select Online Support • Open a Customer Service Request online
Telephone	**1-800-4NORTEL (1-800-466-7835)**	• Call 1-800-4NORTEL • Find the nearest Technical Solutions Center • Enter ERC (Express Routing Code) if it is available

FCC Conformance

This device complies with Part 15 of the FCC rules. Operation is subject to the following two conditions: (1) this device may not cause harmful interference. And (2) this device must accept any interference received, including interference that may cause understand operation.

This Class B digital apparatus complies with Canadian ICES-003.

Safety guidelines

This chapter contains safety guidelines that you must follow for personal safety and for the correct handling and operation of equipment.

Warning and safety precautions

To prevent personal injury, equipment damage, or service interruption, follow all precautionary messages found in WLAN Cable Access Point 6220 documentation and the safety procedures established by your company.

The following precautionary messages appear in WLAN Cable Access Point 6220 documentation:

DANGER
Risk of personal injury
A precautionary message with this symbol indicates a risk of personal injury.

DANGER
Risk of electrical shock
A precautionary message with this symbol indicates a risk of personal injury caused by an electrical hazard.

CAUTION
Risk of interruption to service
A precautionary message with this symbol indicates a risk of service interruption or equipment damage.

The graphic symbol of an exclamation point within an equilateral triangle warns the user of the device that it is necessary to refer to the instruction manual and its warnings for proper operation of the unit.

Summary of Warning and Safety Precautions

MAKE SURE THAT POWER SUPPLIER IN HFC NETWORK IS TURNED OFF PRIOR TO CONNECTING THE COAXIAL CABLE TO THE CABLE ENTRY CONNECTOR ON APU ENCLOSURE.

DO NOT FASTEN OR UNFASTEN THE COAXIAL CABLE CONNECTOR ON THE APU WITH UNDER THE UNIT POWERED.

DO NOT CONNECT OR INJECT ANY AC POWER EXCEPT CATV UPS/POWER SUPPLY. SUCH A MISTAKE WILL CAUSE APU TO BE SERIOUSLY DAMAGED.

REFER SERVICING TO A QUALIFIED TECHNICIAN TO REDUCE THE RISK OF ELECTRIC SHOCK WHEN THE UNIT DOES NOT APPEAR TO OPERATE NORMALLY OR EXHIBITS A MARKED CHANGE IN PERFORMANCE.

WHEN INSTALLING THE UNIT, CHOOSE A LOCATION THAT PROVIDES A MINIMUM SEPARATION OF 20 cm FROM ALL PERSONS DURING NORMAL OPERATION.

THE APU AND CSU SHALL BE INSTALLED BY A PROFESSIONAL FIELD TECHNICIAN

BOTH TYPES OF UNITS SHOULD BE INSTALLED BY A PROFESSIONAL FIELD TECHNICIAN TO REMOVE THE POSSIBILITY OF INCORRECT INSTALLATION FOR APU AND CSU.

DO NOT EXPOSE THIS UNIT TO RAIN, MOISTURE OR DUST UNCOVERED.

BE SURE NOT TO BE SITUATED NEAR HIGH VOLTAGE POWER SOURCES.

MAKE SURE THAT ALL BOLTS ON THE ENCLOSURE ARE TIGHTENED FIRMLY SO THAT WATER DOES NOT ENTER THE UNIT.

BE SURE THAT ALL CONNECTORS ARE CONNECTED TO THE UNIT AND THE RF CABLE HAS BEEN PROTECTED BY THE WATER-PROOF CAP.

BE SURE THAT THE POWER SUPPLY UNIT THAT PROVIDES AC POWER TO THE APU OPERATES WITHIN THE GUIDELINES IN THIS MANUAL.

IF YOU ARE NOT SURE OF THE TYPE OF POWER SUPPLIED TO YOUR UNIT, CONSULT YOUR LOCAL NORTEL NETWORKS REPRESENTATIVE OR NETWORK SERVICE COMPANY.

BE SURE THAT THE RADIO ANTENNA IS LOCATED AWAY FROM ALL POWER FACILITIES SUCH AS CABLE OR POWER SUPPLIERS.

NEVER PUSH OBJECTS OF ANY KIND INTO THE UNIT. IT MAY TOUCH DANGEROUS VOLTAGE POINTS OR SHORT-OUT PARTS THAT COULD CAUSE AN ELECTRIC SHOCK.

DO NOT ATTEMPT TO HANDLE THE UNIT YOURSELF. WITHOUT FULL KNOWLEDGE OF THE OPERATIONS AND CHARACTERISTICS OF THE APU PRODUCT AS OPENING OR REMOVING COVERS MAY EXPOSE YOU TO DANGEROUS VOLTAGE OR OTHER HAZARDS.

Overview

Introduction

This document describes the system features used in the WLAN Cable Access Point 6220 Release 1.0 Product.

The Wireless LAN Cable Access Point 6220 is an outdoor hardened, strand-mountable access point solution designed to extend the reach of the cable operators' hybrid fiber coax network utilizing wireless technologies from existing rights of ways. This solution from Nortel Networks provides cable operators a fast, low-cost alternative for delivering service to new customers by eliminating the time, permits, and construction costs associated with extending aerial or buried drops.

The WLAN Cable Access Point 6220 solution provides:

Flexible service platform

The WLAN Cable Access Point 6220 is a flexible service platform giving cable operators the ability to offer many different wireless services such as Public Hot Spots and Commercial High Speed Data services.

Standard Compliance and Interoperability

The WLAN Cable Access Point 6220 utilizes standard-compliant DOCSIS™ cable modems, thus ensuring interoperability with the existing cable network. Wireless access is accomplished using industry-standard IEEE 802.11 radios approved by government regulatory agencies for use in "unlicensed" ISM frequencies.

Security

Security is of the highest importance when delivering wireless services. The WLAN Cable Access Point 6220 adheres to industry standards for 802.11 devices and augments those standards with additional security features designed to provide both the cable operator and the end-user maximum protection.

Performance optimization via multiple antenna options

Nortel Networks provides antenna options specifically engineered to enable the WLAN Cable Access Point 6220 to achieve peak link performance in Line of Sight (LOS) and Near LOS applications.

Ease of installation

Designed for simple, fast installation by professional technicians, the WLAN Cable Access Point 6220 is installed in a simple three-step procedure: lock down strand clamps, connect power via coax drop, and attach and align antenna for service optimization

Figure 1-1
WLAN Cable Access Point 6220 Service Concept Diagram

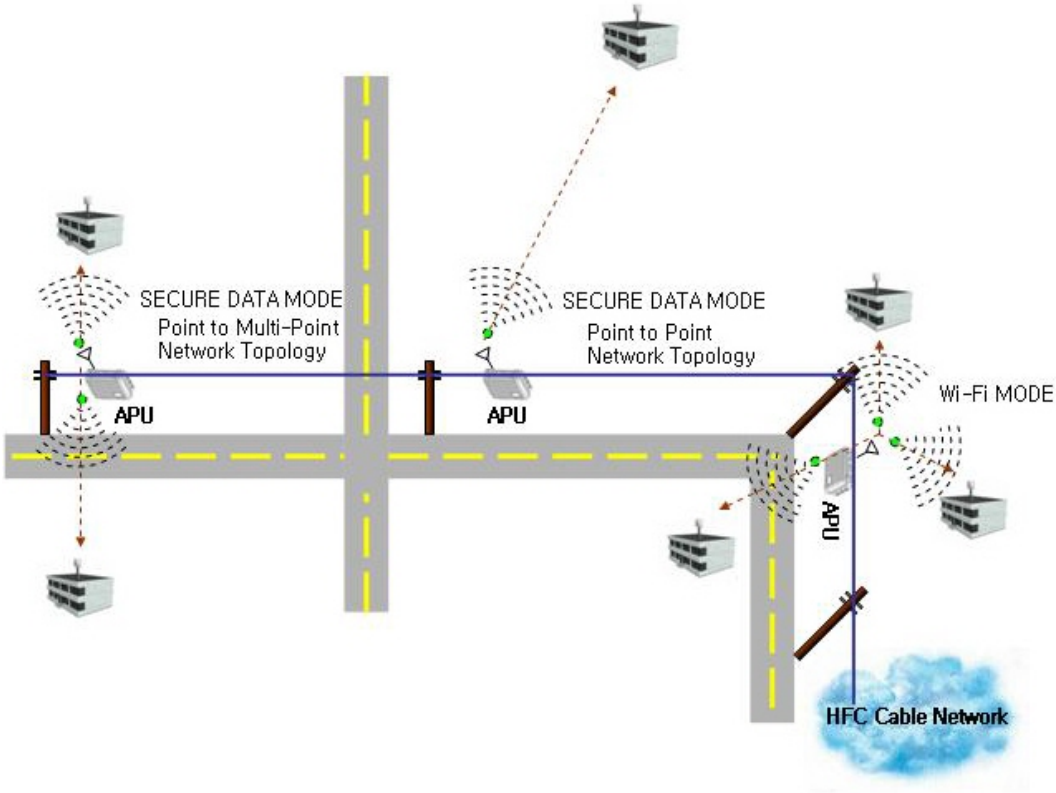

Product Description

Table 1-1
WLAN Cable Access Point 6220 Products

PEC	DESCRIPTION
APU	
NTPM99AC	APU,2.4G,B RADIO,Cable Modem,NA,6Mhz
NTPM99AE	KIT APU,2.4G,FP ANTENNA, 14 dB gain,NA,6Mhz
NTPM99AF	KIT APU,2.4G,OMNI ANTENNA, 7dB gain,NA,6Mhz
NTPM99AP	KIT APU, 2.4G, 2412N ANTENNA, 9dB peak,NA,6Mhz
NTPM99AR	APU,2.4G,B RADIO,Cable Modem,8Mhz
Accessories	
NTPM99EA	APU Antenna Mounting Kit
NTPM99EB	Flat Panel Antenna connection cable SMA(M) to N(M)
NTPM99EC	OMNI Antenna connection cable N(M) to N(M)
NTPM99ED	Antenna - Flat panel 14 dB gain
NTPM99EE	Antenna - Omni directional 7dB gain
NTPM99EF	Antenna - 2412 Bi DIrectional
NTPM99EG	CSU MOUNTING KIT
CSU	
NTPM99BC	CSU,2.4G,B RADIO,Flat Panel, NA, 6Mhz
NTPM99BJ	CSU,POE INJECTOR
NTPM99BK	CSU,2.4G,B RADIO, Flat Panel (EU)
Documentation	
NTPM99CA	R1.0 WLAN6220 CAP DOC,PAPER
NTPM99CB	R1.0 WLAN6220 CAP DOC,CD
Software	
NTPM99DA	R1.0 WLAN6220 CAP SOFTWARE,CD
NTPM99DB	CERTIFICAT,WLAN6220,R1.0,1/APU
NTPM99DC	CERTIFICAT,WLAN6220,R1.0,1/CSU
APU Software Licenses	
NTPM99FA	RTU,SDM,WLAN6220,1/APU
NTPM99FB	RTU Hotspot, WLAN6220, 1/APU
NTPM99GA	SLU,WLAN6220,1/APU
NTPM99GB	NSLU,WLAN6220,1/APU
CSU Software Licenses	
NTPM99HA	RTU,SDM,WLAN6220,1/CSU
NTPM99JA	SLU,WLAN6220,1/CSU
NTPM99JB	NSLU,WLAN6220,1/CSU

Figure 1-2
WLAN Cable Access Point 6220 APU Package Components

Figure 1-3
WLAN Cable Access Point 6220 CSU Package Components

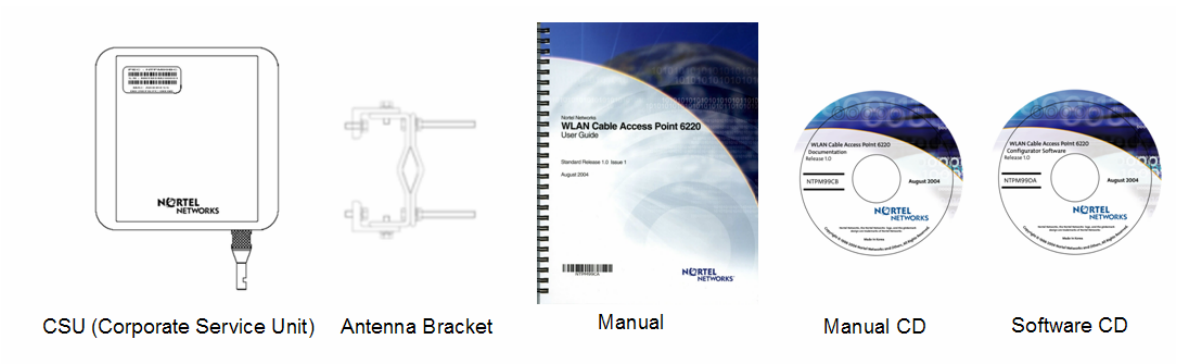

APU (Access Point Unit)

The following is a list of WLAN Cable Access Point 6220 APU features:

- Enclosure has three sorts of connectors which support the connection to CATV Cable Network, Antenna and Monitoring Equipment.

- Coaxial Port has the standard type of connector that can be efficiently adapted to every connector regardless of the termination type of coaxial cable such as “Trunk or Drop Cable”

- Operation Power and Data Traffic are mixed at a signal amplifier as TBA (Trunk Bridge Amplifier), PI (Power Inserter) and supplied to the coaxial port on the APU through coaxial cable.

- Monitoring Port can provide the safe testing method for measuring CATV signal to an installation engineer by attenuating RF power and protect AC power signal.

- Basically, two kinds of mounting types are available for the APU, such as a steel wire strand mounting and wall mounting, but in case of wall mounting, another optional bracket kit will be needed for installation.

- The three available antennas are ‘Directional Type’, ’Bi-directional Type’ and ‘Omni-directional Type’, which can be mounted on the front or rear cover of the APU with a Universal Bracket.

- Cable Modem Module is compliant to DOCSIS 2.0(Cablelabs) as well as DOCSIS 1.1 and WLAN AP support the secure mode connection which means that wireless traffic from APU and CSU is not scanned and detected by a conventional sniffing program like ‘Netstumbler’.

Figure 1-4
APU (Top head)

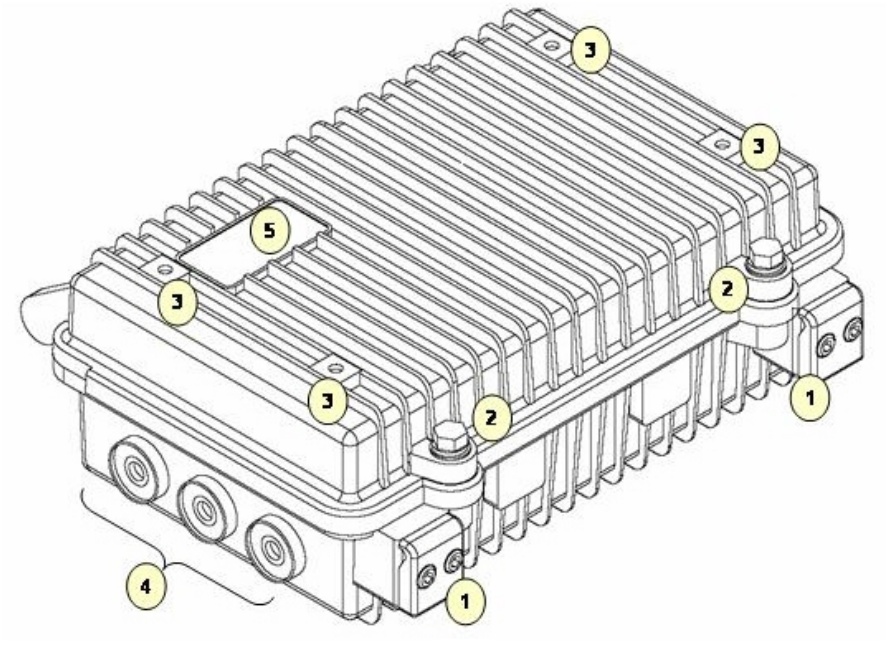

Figure 1-5
APU (Bottom)

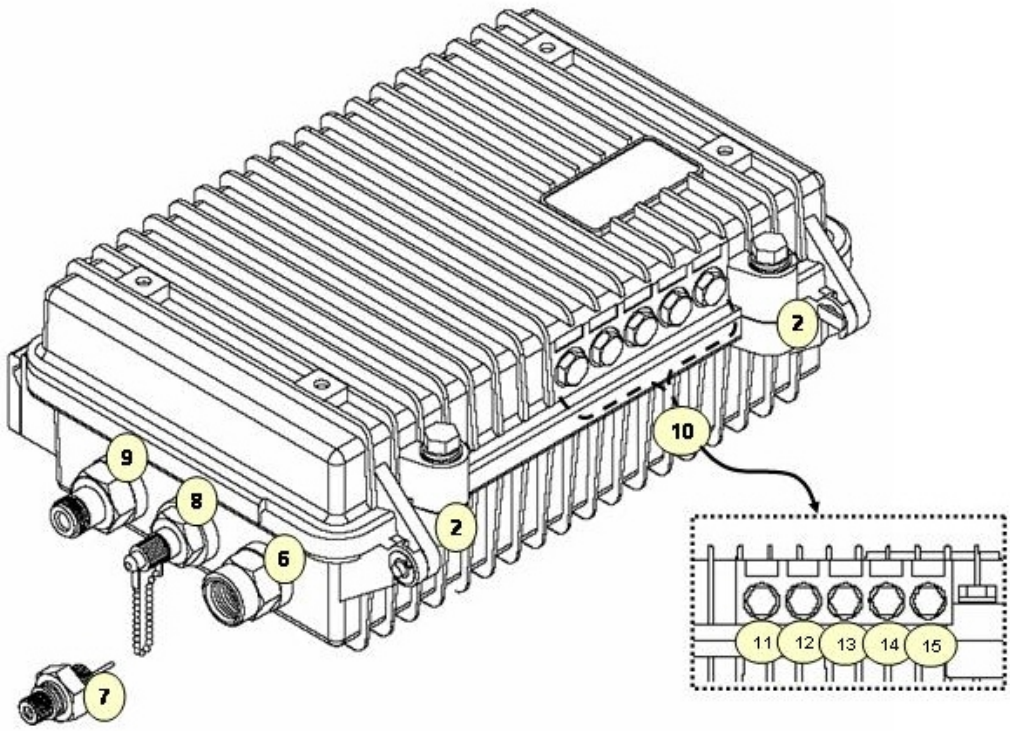

Figure 1-6
Inner Panel (APU)

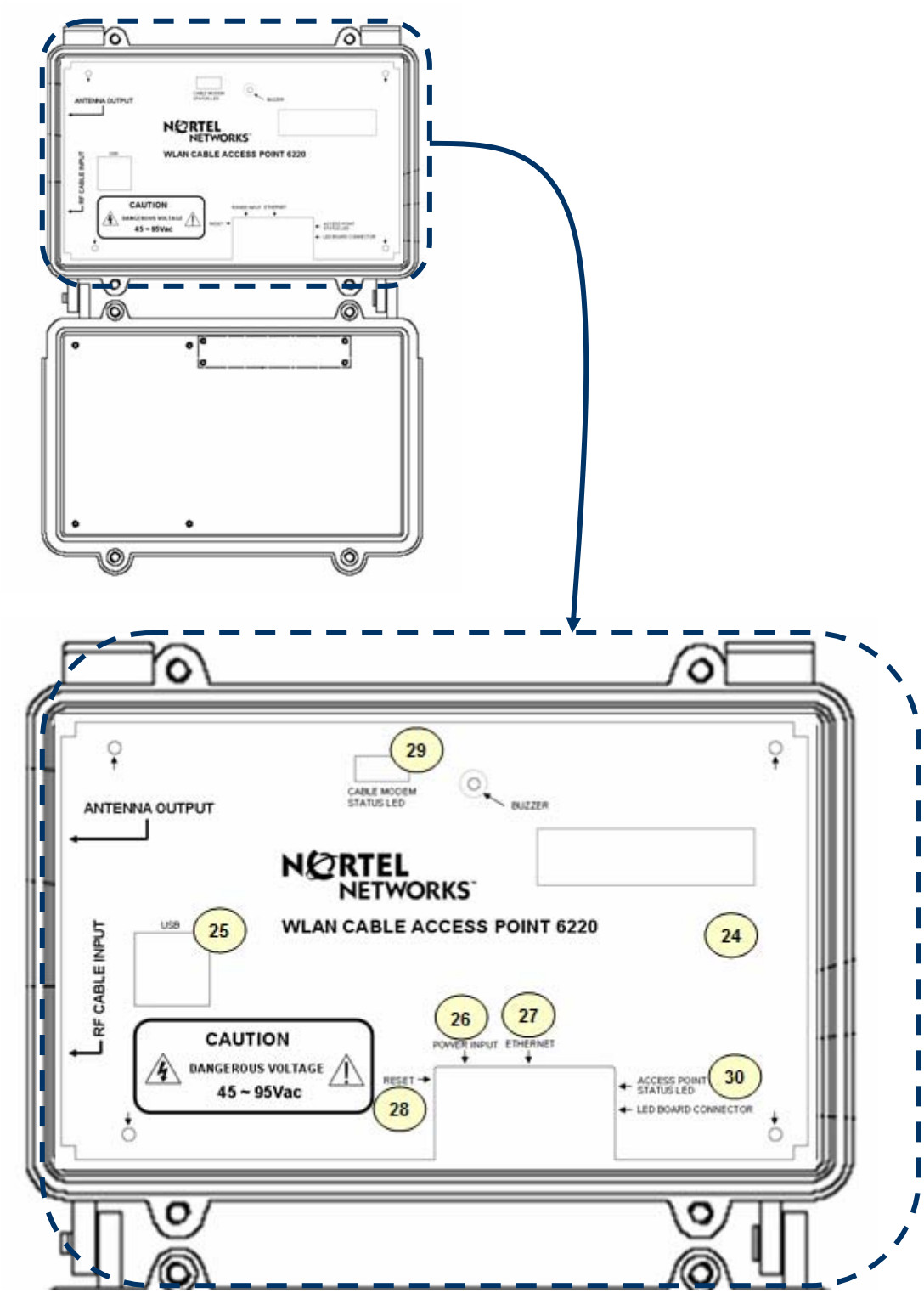

Figure 1-7
APU (Back)

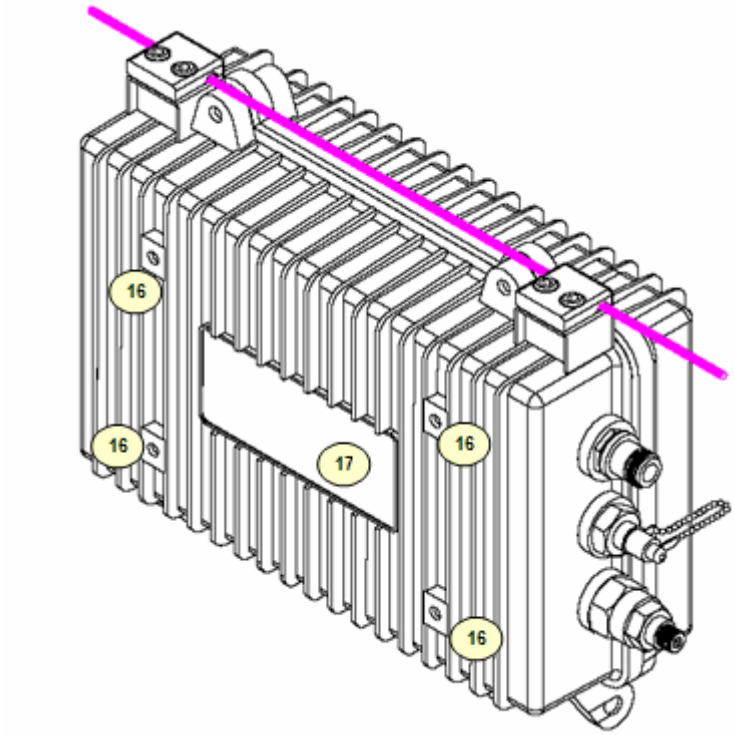

Figure 1-8
APU System Structure and Signal Flow

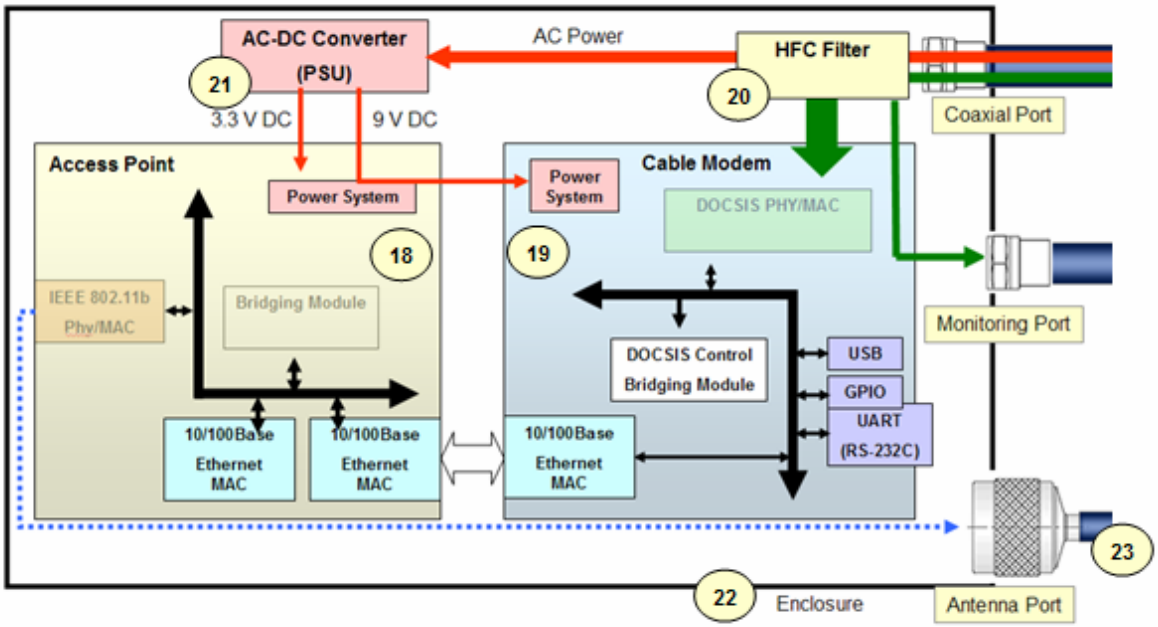

Table 1-2. Modules and Connectors (APU)

Item	Label	Description & Function	
1	Clamp Module	Provide strand mounting function to APU, Strand Clamp and Mount Bosses	
2	Lid Bolt	Lid Bolt for closing a case of APU enclosure	
3	Antenna Mount Hole	Screw Holes for mounting a APU antenna with a universal bracket	
4	Reserved Port	Reserved Location for a future upgrade and revision	
5	Logo Panel	Location for Nortel networks Logo	
6	Cable Entry Port	Port for coaxial cable connection. Trunk and Drop termination types are supported	
7	Cable Adaptor	Coaxial Adaptor Port to connect F-type Drop cable to APU Cable Entry Port	
8	Monitoring Port	Port reserved for safe testing of Cable RF signal. The signal on this port is attenuated by 20 dB	
9	Antenna Port	Port for antenna connection	
10	LED Panel	Provide the information for system operation status through LED Display	
11	LED1(Power)	Indicate Power is turned on	
12	LED2(Link #1)	ON	Indicate a valid cable modem operation
		Flash	Indicate that cable modem is linked up on the HFC network
13	LED3(Link #2)	ON	Indicates a Ethernet link between access point and cable modem
		Flash	Indicates that the access point is transmitting or receiving data
14	LED4(Radio #1)	ON	Indicates the 802.11b radio is enabled and operating
		Flash	Indicate that a frame is transmitted or received on the radio port
15	Reserved		Reserved location for a future upgrade
16	Antenna Mount Hole Grounding Hole	Screw Holes for mounting a APU antenna with a universal bracket and grounding the APU enclosure	
17	Label	Location for attaching a product label which include S/N,PEC,MAC address and so on	
18	Access Point	Mini-PCI type III Radio Card, System Board(Wi-Fi & Secure Data Mode ™)	
19	Cable Modem	DOCSIS 2.0 compliant cable modem	
20	HFC Filter	Split a HFC Signal and AC power from the combined signal	
21	PSU	AC to DC Power converter	
22	Case	Housing case which can be mounted on strand and antenna mounting bracket	
23	Antenna	2.4GHz Radio Frequency Antenna (Flat Panel, Omni-directional and Bi-directional). APU antenna can be mounted on the front or rear cover of APU with universal bracket.	
24	Inner Panel	Cover Panel to secure the main system boards(WLAN AP, Cable Modem)	
25	USB Port	USB type port for testing the Cable Modem Module	
26	DC Connector	3-pin connector to supply DC power to system board from Power Converter	
27	Ethernet Port	Port to connect APU to laptop/PC for testing purpose	
28	Reset S/W	Switch to reset the system to default settings	
29	Cable Modem LED	Indicate the full status of Cable Modem	
30	Access Point LED	Indicate the full status of Access Point	

CSU (Corporate Service Unit)

The following is a list of WLAN Cable Access Point 6220 CSU features:

- Enclosure has a POE connection interface and a DC Power Adapter Jack at the bottom of the CSU.
- Operation Power & Data Traffic are mixed at POE Injector and supplied to the Ethernet Port on the CSU through CAT5 Cable.
- Two types of mounting alternatives are available, pole mount and wall mount. If wall mount is used a mounting kit will be required.
- The antenna is basically a Flat Panel type which is a built-in CSU body protected by a plastic material RADOME.
- WLAN AP supports the secure mode connection which means that wireless traffic from APU and CSU is not scanned and detected by a conventional sniffing program like ‘Netstumbler’.

Figure 1-9
WLAN Cable Access Point 6220 CSU (Bottom)

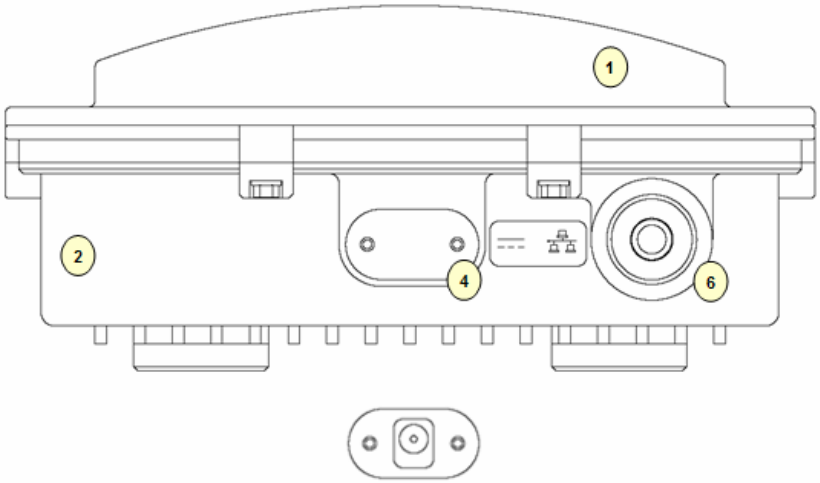

Figure 1-10
WLAN Cable Access Point 6220 CSU (Front)

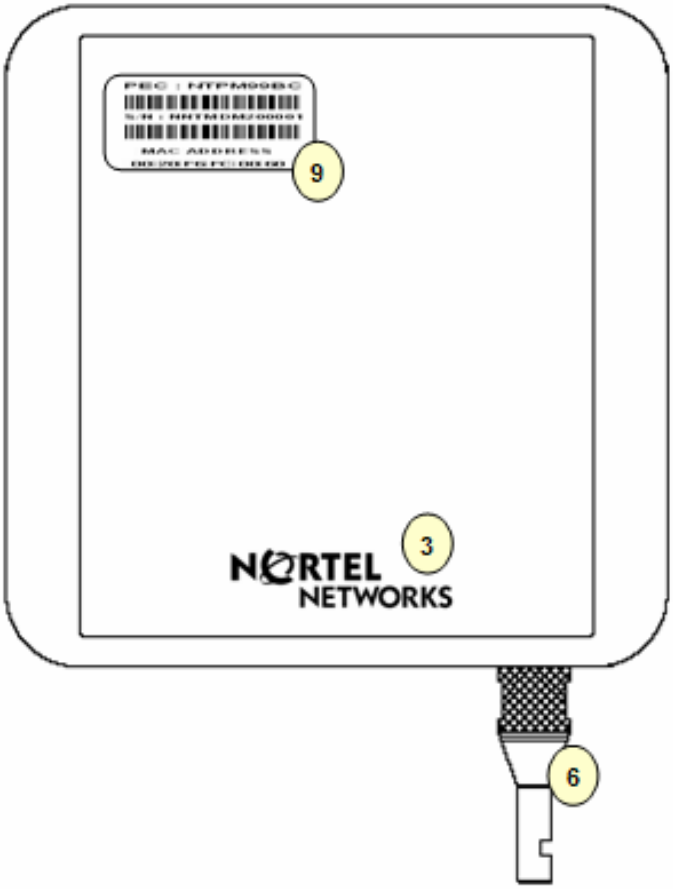

Figure 1-11
WLAN Cable Access Point 6220 CSU (Back)

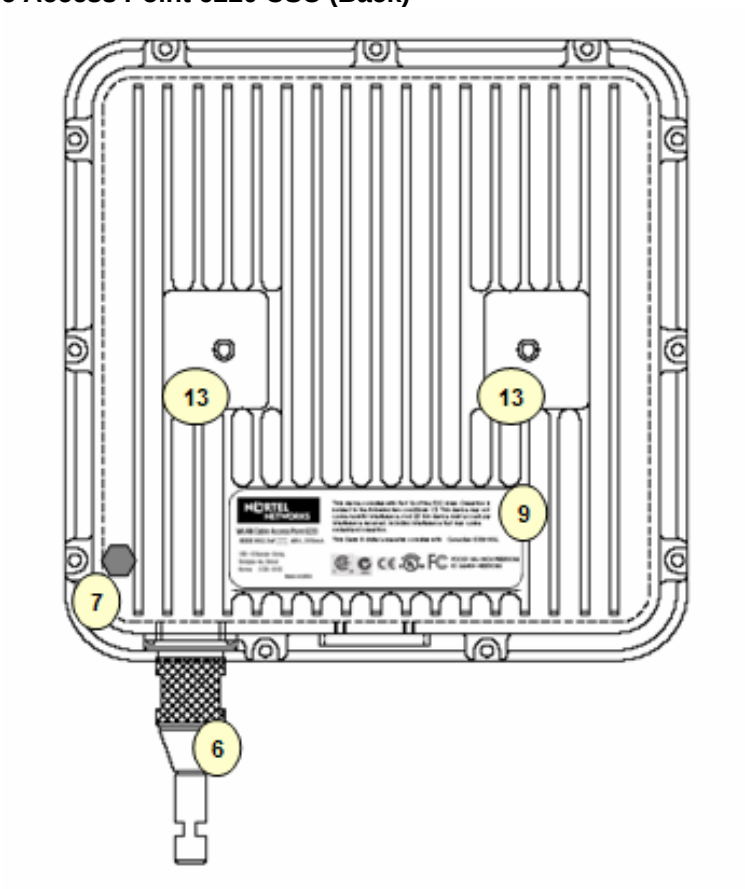

Figure 1-12
WLAN Cable Access Point 6220 CSU

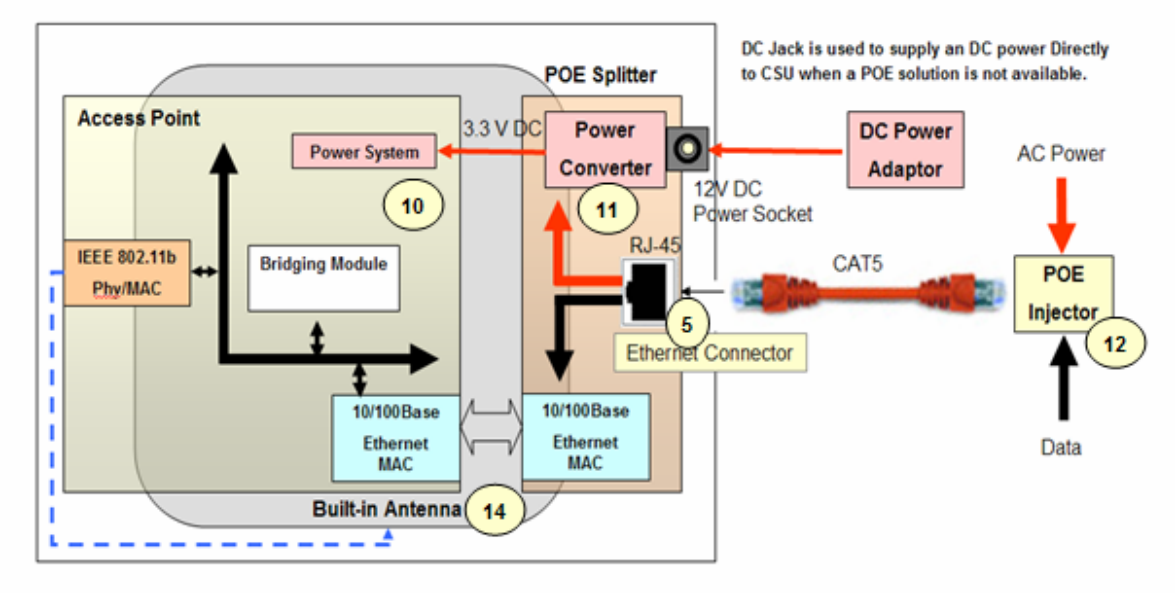

Table 1-3. Modules and Connectors (CSU)

Item	Label	Description & Function
1	Antenna Radome	Protective Cover designed to contain a built-in antenna
2	Enclosure(Body)	Housing Integrated with an Antenna Case Assembly
3	Logo Panel	Location for Nortel networks Logo
4	DC Power Socket	Provide DC power(12V) from AC-DC Adaptor to CSU
5	Ethernet Port(POE)	Provide data connection between CSU and POE Injector or LAN Switch
6	EMI Cap	EMI Cap designed to prevent CSU from interfering to or from other devices Additionally, provide water proof feature accompanied by sealing tape
7	Ground Point	Location for grounding the enclosure to earth for protecting the product from damage
8	Label(Front)	Location for attaching a product label which include S/N,PEC,MAC address and so on
9	Label(Back)	Location for attaching a product label which include S/N,PEC,MAC address and so on
10	Access Point	Mini-PCI type III Radio Card, System Board(Wi-Fi & Secure Mode ™)
11	POE Splitter	Power Module to divide Ethernet Signal and DC power combined signal from POE Injector
12	POE Injector	Provide 802.3af based signal to CSU through Ethernet Port on CSU
13	Bracket Hole	Bolt Hole for assembly of mounting bracket
14	Built-in Antenna	2.4GHz Radio Frequency Antenna (Flat Panel)

THE 12V POWER CONNECTOR IS NOT INTENDED FOR FIELD USE. THIS SOCKET IS ONLY APPLICABLE FOR A SPECIAL USE AT FACTORY OR REPAIR FACILITY.

Planning your WLAN Network

The wireless network is much different than a wired network. The Installation of a wireless network requires some additional planning. This planning includes RF Link Engineering like RF Path planning, site selection, and back-bone network preparation.

The radio links between all end sites are specified as three types of environmental connection as listed below:

LOS(Line Of Sight)
OLOS(Optical LOS)
NLOS(Non LOS)

Because High Frequency Radio travels in a straight forward line, a clear LOS(line-of-sight) between antennas is efficient and ideal. Frequently, locations of the desired links are fixed.

When you cannot achieve a clear line-of-sight, you must plan according to basic consideration:

The Basic considerations for sites include:

- Installation Facility must be constructed (Electric Pole, Tower)
- Possibility of future obstructions
  - Trees that may obstruct the path
  - Buildings between the sites that may obstruct the path
- Lightening
- Distance between sites and Network Structure
- Strong RF interference

Site Survey & Planning

Definition

A site survey is a task-by-task process by which the surveyor discovers the RF behavior, coverage, interference, and determines proper hardware placement in a facility. The site survey's primary objective is to ensure that mobile workers and the wireless LAN's clients experience continuously strong RF signal as they move around the facility.

Items

- *Facilities Analysis*
- *Existing Networks*
- *Area Usage & Towers*
- *Purpose & Business Requirements*
- *Bandwidth & Roaming Requirements*
- *Available Resources*
- *Security Requirements*
- *Preparation Exercises*
- *Preparation Checklist*

Site Survey Equipment

- *Corporate service unit(CSU) with POE Injector*
- *Laptop and/or PDA*
- *Wireless PC card with driver & utility software*
- *Battery pack charger & DC-to AC converter*
- *Site survey utility software (loaded on laptop or PDA)*
- *Clipboard, pen, pencils, notebook paper, grid paper, & highlighter*
- *Blueprints & network diagrams*
- *Outdoor antennas(Omni-directional, Patch, Bi-directional)*
- *Cables & connectors*
- *Specialized software or hardware such as a spectrum analyzer*
- *Digital camera for taking pictures of particular locations within a facility*
- *Variable attenuator*

Wireless Network Planning

Procedure 1 (Location)

1. Select and identify enough location candidates to determine freely as the install point regardless of some design change to some extent.
2. The most crucial parameter is the range at which APU and CSU or other Wi-Fi Client is required to operate. The range can be determined by a conventional formula which consider a various kinds of environmental and radio equipment.
3. Another consideration in installing APU and CSU is the network connection like a CATV Coaxial Cable and CAT5 Ethernet Cable. Even though some locations are the best location in terms of RF performance, the actual installed location is restricted by limited cable reach.

Procedure 2 (Radio Link Path)

1. Choose the proper antenna type with a site survey result.
2. For best performance, mount the APU and CSU in a location where there is LOS (Line Of Sight) to each antenna.
3. Perform the field survey to summarize every obstacle like tree and earth bulge in consideration of OLOS (Optical LOS).
4. With the site survey result, adjust the tilt and angle of antenna so that there is maximum clearance within the FRESNEL ZONE of the direct path.
   Note: The best means of achieving FRESNEL ZONE clearance is to raise the height of APU or CSU mounting point as high as possible
5. In order to get the more exact information on RF radio link path, calculate the Link Budget for Radio Link between APU and CSU which is referred in the end of this section.

Note: The link budget is a rough calculation of all known elements of the link to determine whether the signal will have the proper strength to the other end of the link.

Procedure 3 (RF Channel Selection)

1. Check all range of channels by RF measurement with Frequency Analyzer in order to see the interference effect with APU and CSU. Actually, RF interference is likely to arise from any other wireless system operating within the same frequency band as ISM/UNII Band Radio Products.

Note: The final selection of operating channel should be done with the testing results of both APU and CSU.

Procedure 4 (Radio Performance Tuning)

Please refer to the Radio Link Test

Installation

General

This section provides a complete set of procedures for the installation of WLAN 6220 equipment. It includes cable assembling information as well as required connection information for the WLAN 6220 units, mounting and powering instructions.

It is intended for use by trained installers familiar with CATV or Cable Modem and Wireless installations.

For technical assistance, contact your next level of support or Nortel Networks according to the information available in Technical Support and Information section.

Installation Procedure Summary

APU (Access Point Unit)

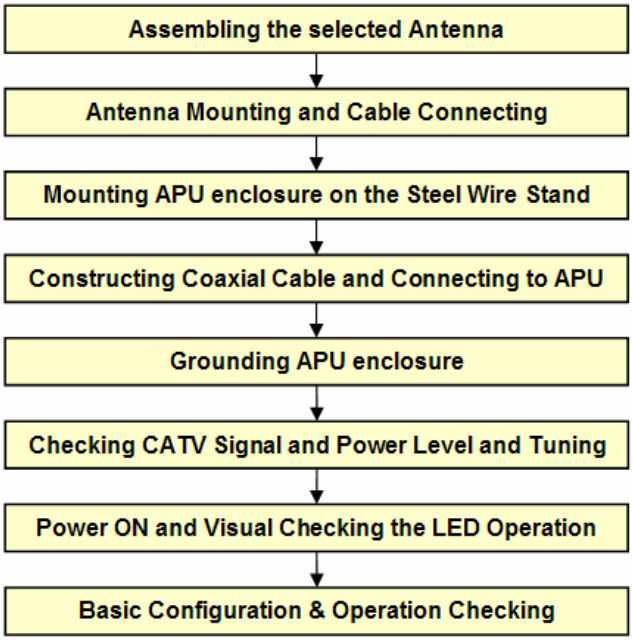

CSU (Corporate Service Unit)

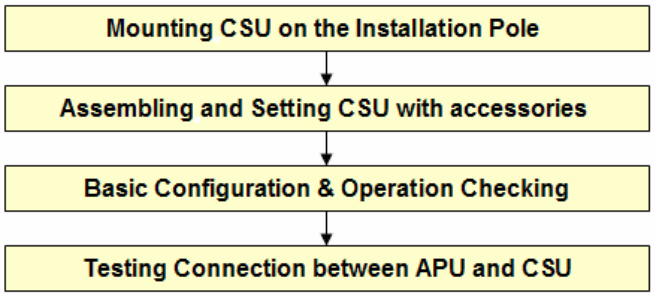

Required Tools and Materials

Before you install the WLAN Cable Access Point 6220, ensure you have the following:

APU

WLAN Cable Access Point 6220 APU package does not contain an antenna and universal antenna bracket kit. For list of antennas and accessories, see the WLAN Cable AP 6220 manual or contact your local Nortel networks representative.

- One or more antenna cables (N-Male to the connector on the external antenna)
- External antennas selected by yourself
- Flat blade screwdrivers
- Wire cutters
- Phillips screwdriver
- Torque wrench/driver
- Other proper tools for installation
- Heat gun with propane/Mapp torch
- Trunk & Distribution Cable Connector and Drop Cable F-connector port
- RF cable for connecting between the APU and Testing Unit (if needed)
- Portable CATV Spectrum Analyzer
- DVM(Digital Voltammeter)
- “Document CD” and “Software CD” that contains the APU Configurator, online help for the Configurator, and various documents.
- Advanced Tool: RF Testing Unit: CSU, Laptop computer with radio card

CSU

- IEEE 802.3af-2003-compliant Power over Ethernet (POE) injector

  Note: Ensure that the POE Injector is UL/cUL approved, with LPS (limited power source) output.

- Heat gun with propane/ Mapp torch
- 1 CAT5 Ethernet Extender Coupler
- "Document CD" and "Software CD" that contains the APU Configurator, online help for the System Configuration, and various documents.
- PC or workstation with a Web browser for configuration

APU Installation & Configuration

Mounting and Installation Concept

Figure 3-1
APU Installation Concept on CATV Network Facility

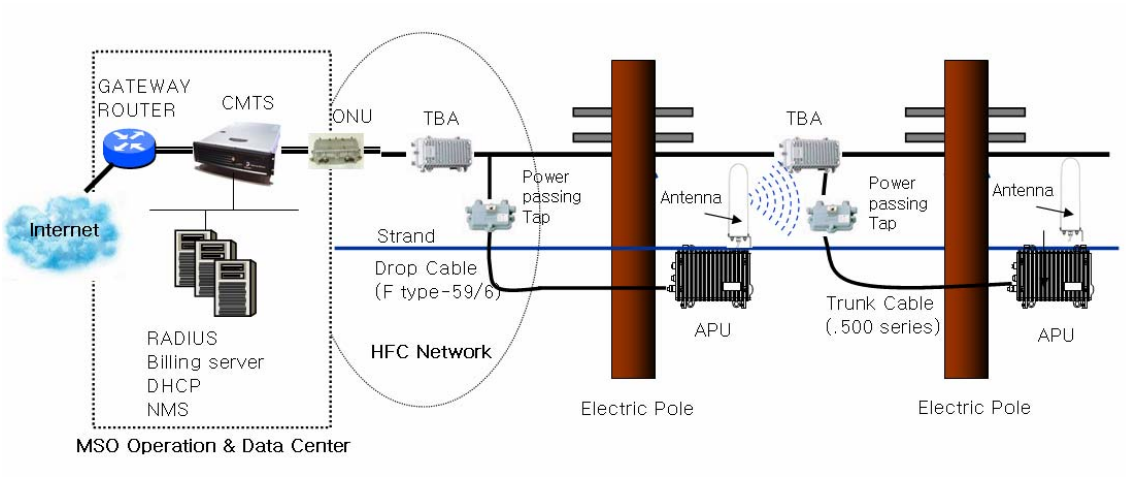

By default, APU is strand mountable. Each unit is shipped with a strand clamp module.

Both Drop and Trunk cable termination types are applicable to the APU. The recommended method is Drop cable.

The APU supports a variety of antenna types: omni-directional, flat panel and bi-directional. The antenna type should be selected according to the coverage needed and type of application - please refer to Appendix H for more detailed information.

Procedure 1-1
Assembling and Mounting the selected Antenna

Common Procedure

1. Unpack the antenna box and check the contents listed in the manual in the box.
2. Prepare the recommended tools for assembly and installation of the antenna.
3. Assemble the antenna and bracket kit following the assembly procedure for the selected antenna type.
4. Perform assembly of antenna and bracket as below.

Action

NTA 2407 (Flat Panel Antenna)

Step	Action
1.	Ensure that each part number is the same as the actual part in the box.
2.	Attach the 2311 mounting bracket #1 to the antenna using the 1/4" flat washers, lock washers and hex nuts as shown in the mounting drawing.
3.	Attach the 2311 mounting bracket #1 to mounting bracket #43 using the 1/4" flat washers, lock washers, hex nuts, and hex bolts as shown in the diagram. Ensure that the brackets are attached through the oblong hole in mounting bracket #43.
4.	With the antenna connector oriented upward, fasten mounting bracket #43 to the radio using the M6 flat washers, lock washers, and hex bolts as shown in the mounting diagram.
5.	To adjust the pan of the antenna, loosen the 1/4" hex bolts that attach the 2311 mounting bracket #1 with mounting bracket #43, adjust the pan, and re-tighten the bolts.

Lightning Protection
The antenna is at DC ground for lightning protection. If the antenna is mounted to a non-conductive structure it should in turn be grounded using practices supplied/approved by the customer.

Weatherproofing
All connections between the antenna connector and the transmission line must be weatherproofed according to standard industry practices.

Drainage

Since the RADOME is not pressurized, there is a drain hole in the connector base plate. The antenna must be installed so that the drain hole remains on the bottom. This drain hole must be kept open so that any moisture accumulating inside the RADOME will be able to drain properly.

Figure 3-2
NTA-2407 Antenna Assembly

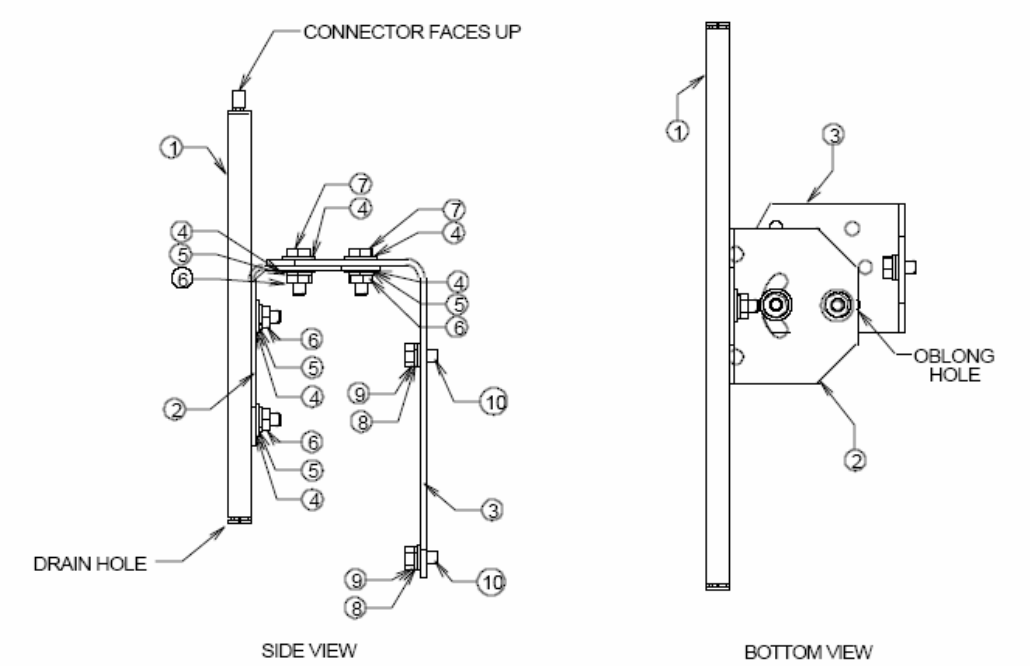

ITEM NO.	DESCRIPTION
1	Antenna
2	TA-2311-MBR-01
3	TA-MBR-43
4	1/4" Flat Washer S.S.
5	1/4" Split Lock Washer S.S.
6	1/4"-20 Hex Nut S.S.
7	1/4"-20 x 5/8" Hex Cap Bolt S.S.
8	M6 Flat Washer S.S.
9	M6 Split Lock Washer S.S.
10	M6 x 12 Hex Cap Bolt S.S.

NTA 2400 (Omni directional Antenna)

Step	Action
1.	Ensure that each part number matches the actual part in the box.
2.	Attach the mounting bracket to the antenna using the M6 flat washers, lock washers and hex cap bolts as shown in the mounting drawing.

3. With the antenna oriented upward, fasten the mounting bracket to the radio using the M6 flat washers, lock washers, and hex cap bolts as shown in the mounting diagram.

Lightning Protection
The antenna is at DC ground for lightning protection. If the antenna is mounted to a non-conductive structure (e.g. building wall, wooden pole etc.) it should in turn be grounded using practices supplied/approved by the customer.

Weatherproofing
All connections between the antenna connector and the transmission line must be weatherproofed according to standard industry practices.

Figure 3-3
NTA-2400 Antenna Assembly

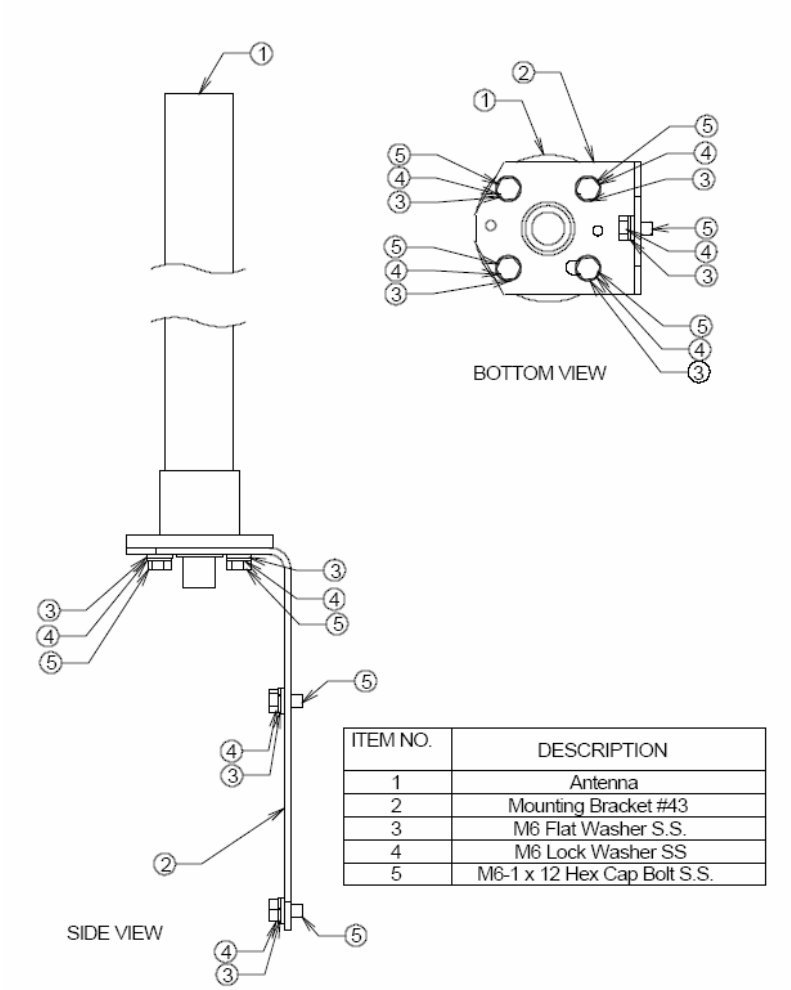

ITEM NO.	DESCRIPTION
1	Antenna
2	Mounting Bracket #43
3	M6 Flat Washer S.S.
4	M6 Lock Washer SS
5	M6-1 x 12 Hex Cap Bolt S.S.

NTA 2412 (Bi-directional Antenna)

Step	Action
1.	Ensure that each part number matches the actual part in the box.
2.	Attach the mounting bracket to the antenna using the 1/4" flat washers, lock washers and hex nuts as shown in the mounting drawing.
3.	With the antenna oriented upward, fasten the mounting bracket to the radio using the M6 flat washers, lock washers, and hex bolts as shown in the mounting diagram.

Lightning Protection
The antenna is at DC ground for lightning protection. If the antenna is mounted to a non-conductive structure (e.g. building wall, wooden pole etc.) it should in turn be grounded using practices supplied/approved by the customer.

Weatherproofing
All connections between the antenna connector and the transmission line must be weatherproofed according to standard industry practices.

Drainage
Since the RADOME is not pressurized, there is a drain hole in the connector base plate. The antenna **must** be installed so that the drain hole remains on the bottom. This drain hole must be kept open so that any moisture accumulating inside the RADOME will be able to drain properly.

Figure 3-4
NTA-2412 Antenna Assembly

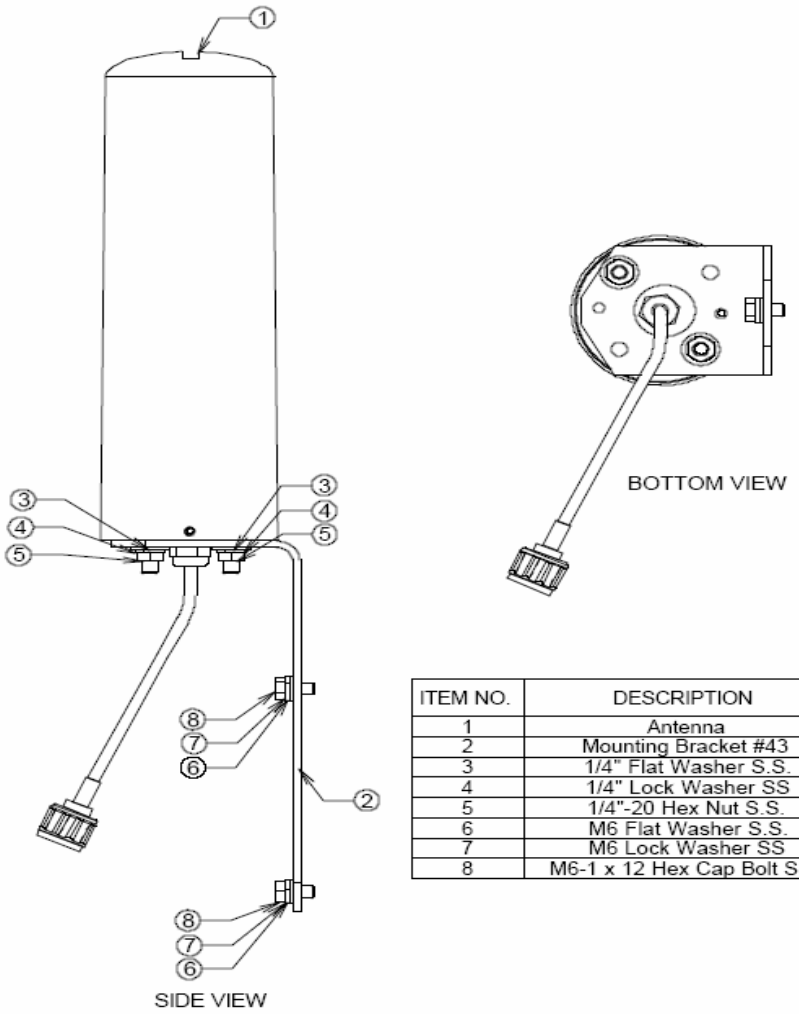

ITEM NO.	DESCRIPTION
1	Antenna
2	Mounting Bracket #43
3	1/4" Flat Washer S.S.
4	1/4" Lock Washer SS
5	1/4"-20 Hex Nut S.S.
6	M6 Flat Washer S.S.
7	M6 Lock Washer SS
8	M6-1 x 12 Hex Cap Bolt S.S.

Procedure 1-2
Antenna Mounting and Cable Connecting

Action

Step	Action
1.	Attach the bracket on the back surface of the APU and thread one flat washer onto each hex bolt. Screw each bolt with the washer into the two mounting holes.

Note: Even if the APU enclosure has universal mounting holes on the front and rear cover, we recommend that you do not mount two kinds of antenna such as omni-directional and bi-directional type on the front cover. If inevitable, the left side of the front cover is the preferred location in consideration of antenna cable length.

2. Tighten each bolt until the washer is pressed firmly into the APU Enclosure.

Figure 3-5
Antenna mounting with a bracket

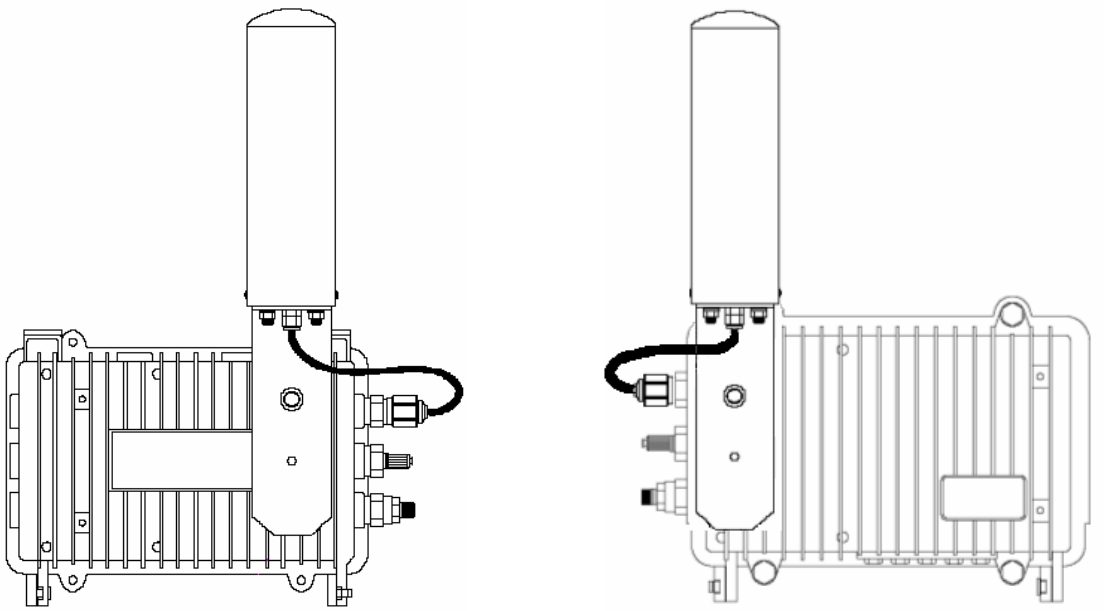

TYPE I TYPE II

BE SURE THAT THE RADIO ANTENNA IS LOCATED AWAY FROM ALL OTHER POWER FACILITIES LIKE CABLE OR POWER SUPPLIERS.

Procedure 1-3
Mounting the APU on the Steel Wire Strand

Action

Step	Action

1. Prior to an installation, check if the strand has the strength to sustain the weight of the APU or 10 lbs.

Note: During placing the cable, do not exceed the maximum rated pulling tension of the steel. After the cable has been placed, tension should be applied to the strand only. Refer to the table of guidelines found in the current NESC Rules 250-252.

Table 3-1
Strand Tension and limitation

Strand Diagram inches (mm)	Weight lbs/ft (kg/m)	Max rated Load lbs (kg)
0.109 (2.77)	0.032 (0.048)	1800 (816)
0.134 (3.40)	0.048 (0.075)	2680 (1216)
0.188 (4.77)	0.073 (0.109)	3990 (1810)
0.250 (6.35)	0.121 (0.180)	6650 (3016)

Figure 3-6
APU Installation scheme

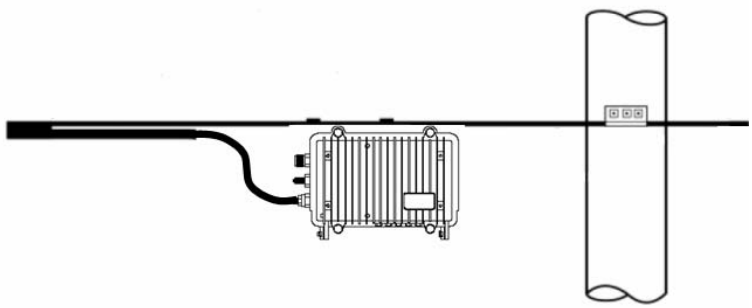

2. Attach the strand clamp assemblies to the top strand clamp bosses (mounting surfaces) with a long socket cap screw bolt (Diameter: 5 mm, Length: 15mm) and lock washers.
3. Slide the wire strand into the clamp module.
4. Tighten the bolts with the power tool that has a hex head socket bit so that the enclosure cannot come off the strand, while the location can still be adjusted.
5. Torque the clamp bolts to between 35 and 60 in-lbs (3.9 and 6.8 Nm).

ENSURE THAT ALL BOLTS IN THE ENCLOSURE ARE FIRMLY TIGHTENED.

WHEN INSTALLING THE UNIT, CHOOSE A LOCATION THAT PROVIDES A MINIMUM SEPARATION OF 20 cm FROM ALL PERSONS DURING NORMAL OPERATION.

Figure 3-7
Unfastening the Strand Mounting Clamps on the APU

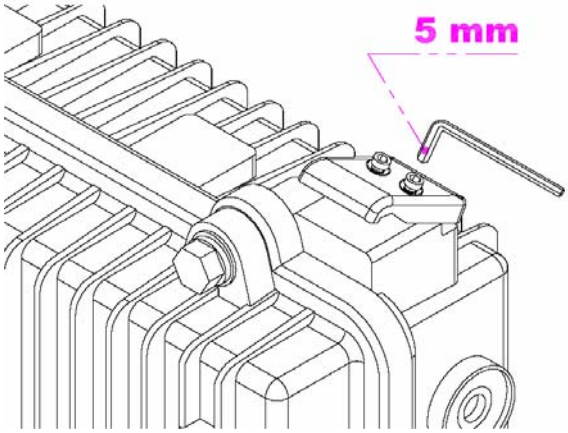

Figure 3-8
Mounting the APU on the Strand by tightening the socket cap screw bolt

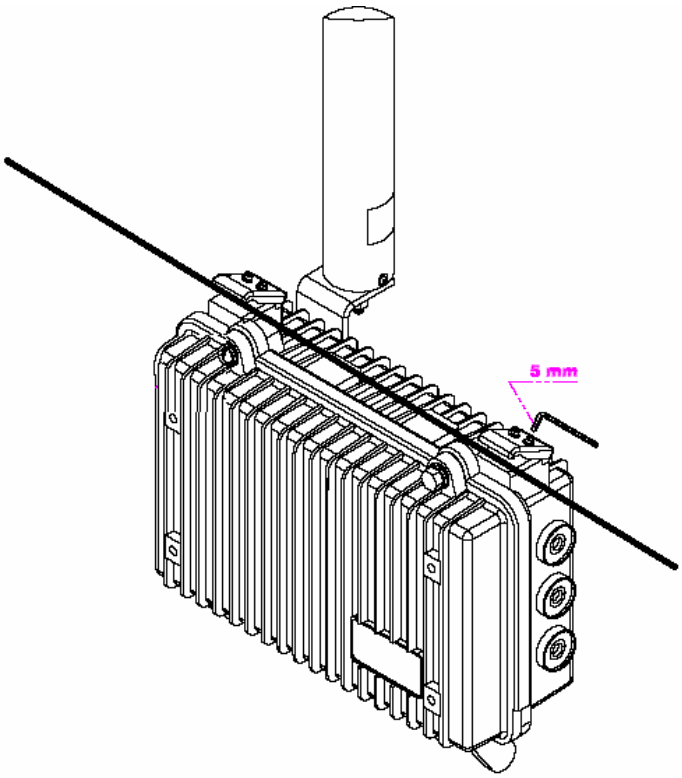

Procedure 1-4
Constructing Coaxial Cable and Connecting to the APU

Common Procedure

1. Prior to installation, choose a type of coaxial cable to be connected to the APU.
   - Trunk & Distribution Cable and Connectors : ".500 series"
   - Drop Cable and Connector : "F-type RG-59/6"
2. Perform installation of the coaxial cable as below.

Action

Trunk Cable Connection

Step	Action
1.	Prepare ".500 series Coaxial Cable", GRS Type connector and all required Tools for Terminator, Coring, Jacket stripper and Compression

Figure 3-9
Trunk and Distribution Cable

Figure 3-10
Trunk Connector Design

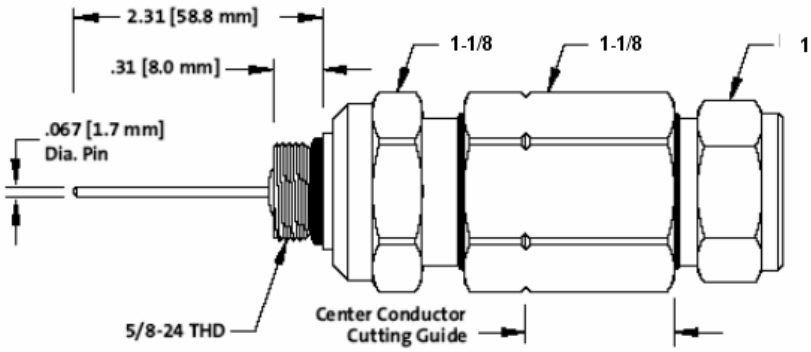

2. Remove the outer jacket/armor to expose the inner jacket, noting that the removal of the outer jacket must be completed without scoring the inner jacket.

3. Using the built-in trim gauge, verify the center conductor, trim length(15/16 inch: 24mm) and remove the dielectric to a depth of 1 1/4 inch(32mm) from the end of the outer conductor.

Figure 3-11
Constructing Trunk and Distribution Coaxial Cable

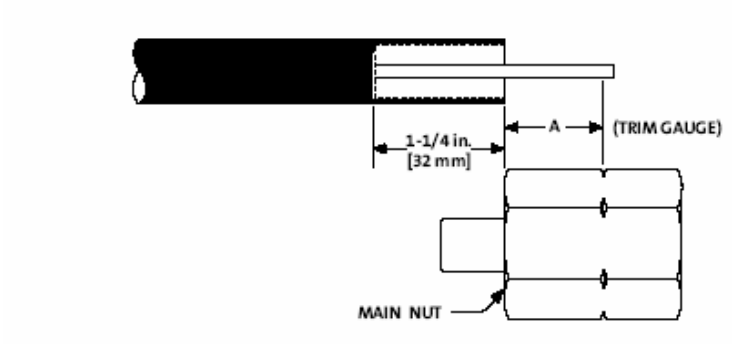

4. After all dielectric and pre-coats have been removed from the center conductor, re-check the center conductor length and trim accordingly.

Figure 3-12
Shading the tip of the center conductor

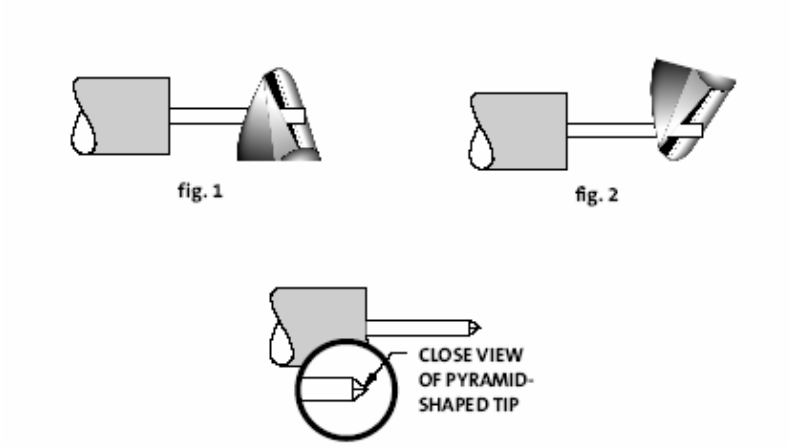

5. Make a cut halfway though and rotate the cutters 90° and complete the cut.
6. Slide the heat shrink tubing over the cable.
7. Remove the outer jacket to a length of ½” (12.7mm).
8. Install the back nut into the cable.
9. Remove and clean flooding material.
10. Install the main nut onto the cable, as a final check on both coring depth and center conductor length. The center conductor will protrude 1/16” to 1/8” past the end of the main nut.
11. Ensure that the cable is fully inserted into the connector so that the jacket butts up against the outer conductor seizing mechanism.

Figure 3-13
Combining Back Nut with Main Nut

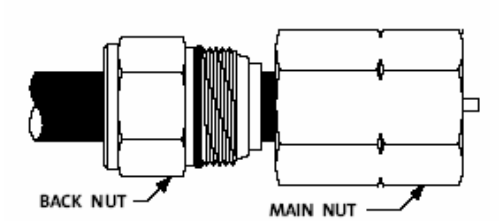

12. In order to prevent damage to the connector on the APU enclosure, cut the pin of the Body connector to the length of 0.59” (15mm) with a cutting tool.
13. Install the Body connector to the enclosure and tighten firmly.

Figure 3-14
Adjusting the length of the center conductor

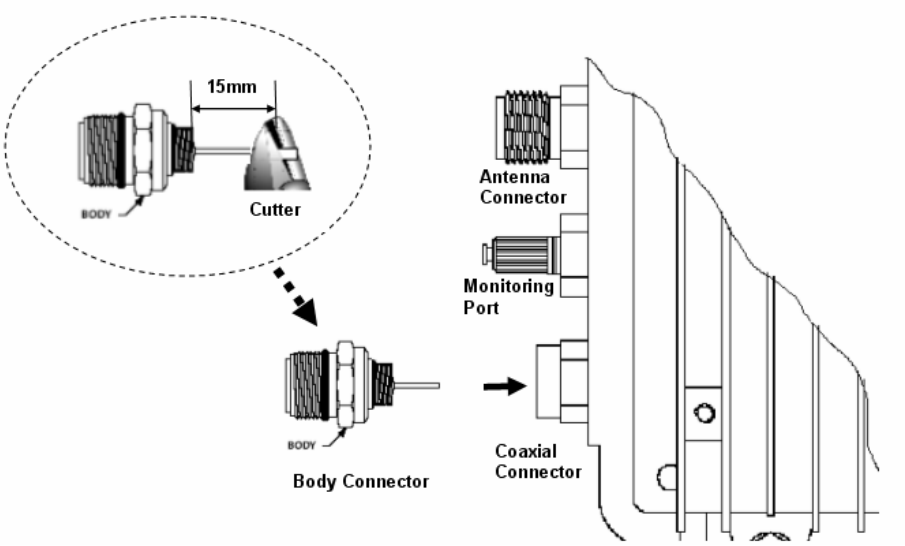

ENSURE THAT THE PIN LENGTH OF THE BODY CONNECTOR DOES NOT EXCEED 15mm (0.59055 inch) TO PREVENT DAMAGE TO THE JOINT PORTION OF THE HFC FILTER IN THE ENCLOSURE

14. Bring the main nut and cable to the body connector. Hand-tighten the main nut to the body continually keeping pressure on cable towards the body so that the center conductor will be properly seized.
15. Using two wrenches, use one wrench to hold the BODY from rotation and the other to continue tightening the main nut to the body until a firm stop is reached.
16. Tighten the back nut by hand, and by using two wrenches, one on the main nut, complete the installation by tightening the back nut firmly to secure the cable (approximately 35 lbs, ft).
17. Secure the center conductor into the equipment enclosure with the seizing screw.

Figure 3-15
Connecting the main connector module to the connector port

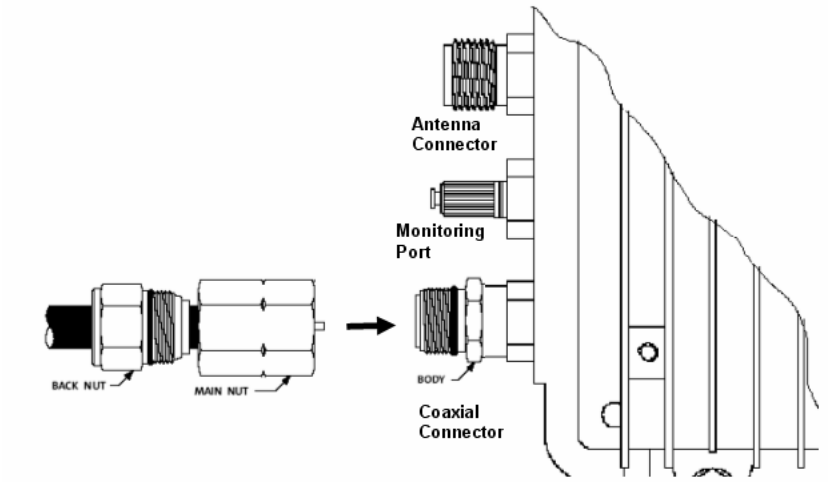

ENSURE THAT THE POWER SOURCE IS TURNED OFF PRIOR TO CONNECTING COAXIAL CABLE (75 ohm) TO PROTECT FROM ELECTRICAL SHOCK

18. Slide the heat shrink tubing over the connector against the APU.
19. Shrink the tubing with a painting motion not concentrating on any one area using a propane torch with a broad “soft” frame.

Figure 3-16
Shrink the tubing to Water Proof

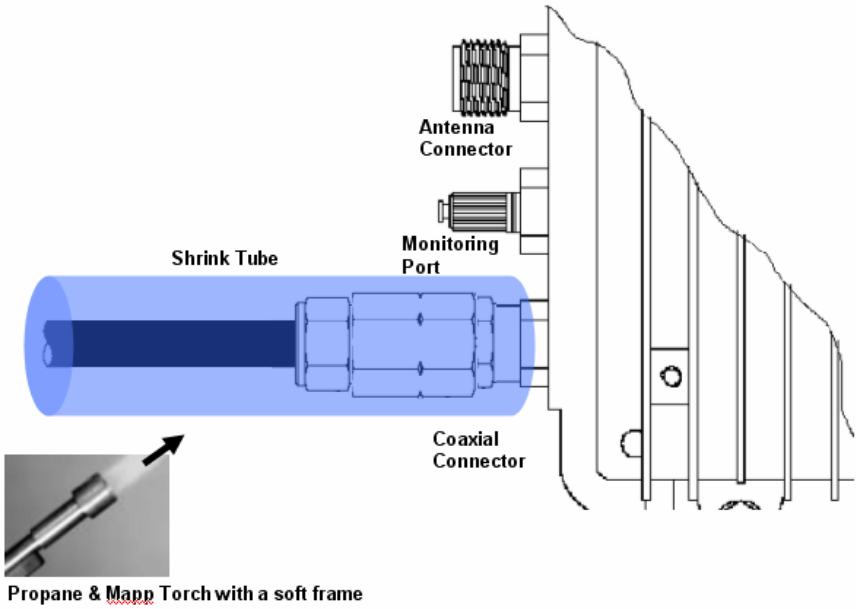

Drop Cable Connection

Step	Action

1. Prepare “F series Coaxial Cable”, connector and all required Tools for Terminator, Coring, Jacket stripper and Compression
2. Remove the outer jacket/armor to expose the inner cable. Fold exposed braid back over jacket. Leave foil attached to dielectric.

Figure 3-17
Drop Cable

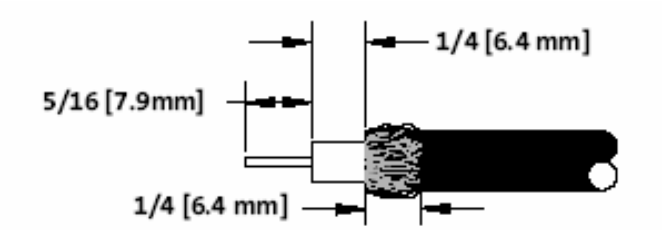

3. Push connector onto the cable until the cable dielectric is flush with the connector post face. Approximately 1/4 inch (6.4mm) of center conductor will protrude beyond the end of the connector nut.

Figure 3-18
Drop Connector Design

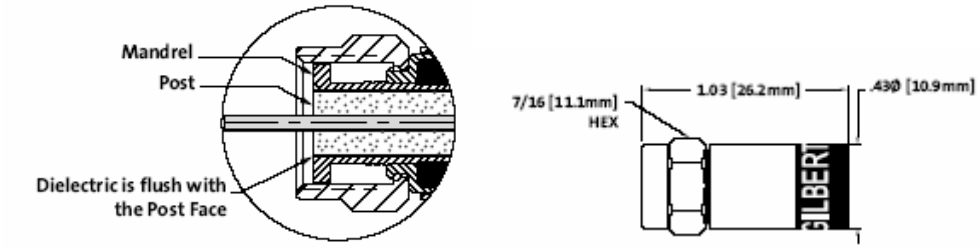

4. Slightly angle the connector/cable and insert into the compression tool area between the plunger tip and the cable gate allowing the center conductor to enter the center conductor guide. Push the cable into the cable gate. Compress the connector by squeezing the tool handles together until a positive stop is reached.

5. Remove the connector/cable from the tool by opening the cable gate to release the assembly from the tool.
   In order to prevent damage to the connector on APU enclosure, cut the pin of N to F type adapter to the length of 0.59inch (15mm) with a cutting tool

Figure 3-19
Adjusting the length of the center conductor

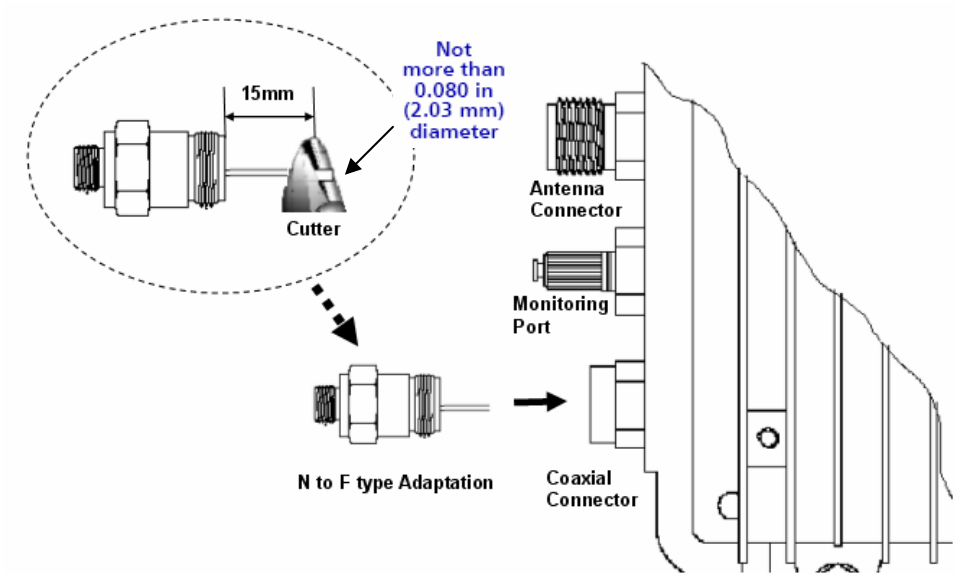

ENSURE THAT THE PIN LENGTH OF THE ADAPTATION CONNECTOR DOES NOT EXCEED 15mm(0.59055 inch) TO PREVENT DAMAGE TO THE HFC FILTER JOINT PORTION IN THE UNIT.

6. Install the N to F type Adapter to the enclosure and tighten firmly

Figure 3-20
Connecting the N to F type Adapter to the enclosure

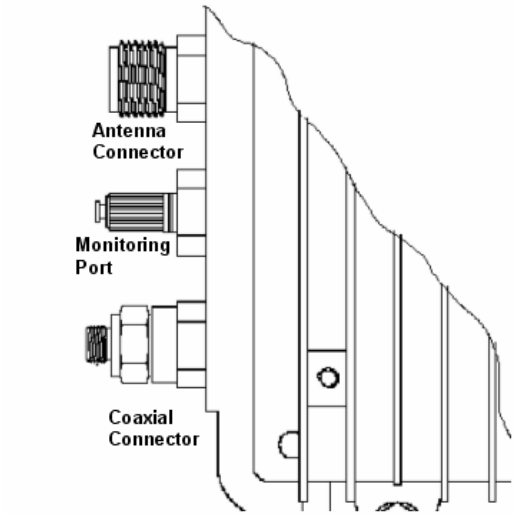

7. Connect a coaxial cable to the F-connector port and fasten enough to prevent a water intrusion into the gap between connectors.

Figure 3-21
Connecting the coaxial cable to the connector port

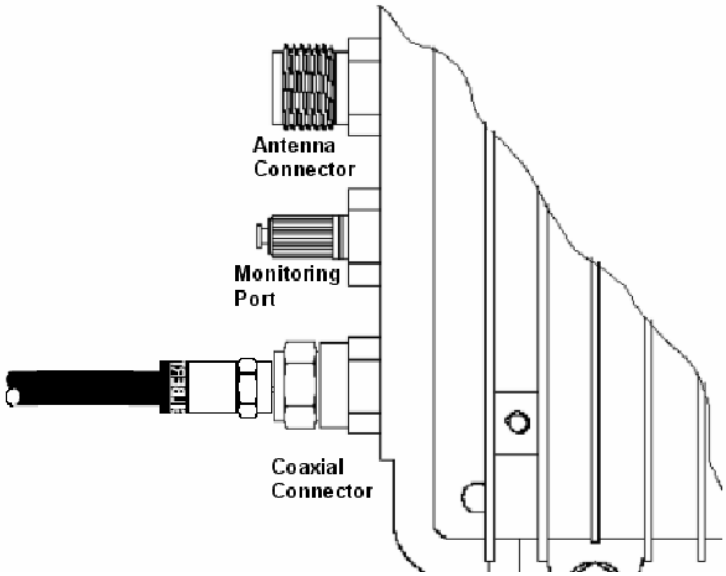

ENSURE THAT THE POWER SOURCE IS TURNED OFF PRIOR TO CONNECTING COAXIAL CABLE (75 ohm) TO PROTECT AN INSTALLER FROM ELECTRICAL SHOCK

8. Slide the heat shrink tubing over the connector against the APU.
9. Shrink the tubing with a painting motion not concentrating on any one area using a propane/Mapp torch with a broad “soft” frame.

Figure 3-22
Shrink the tubing to Water Proof

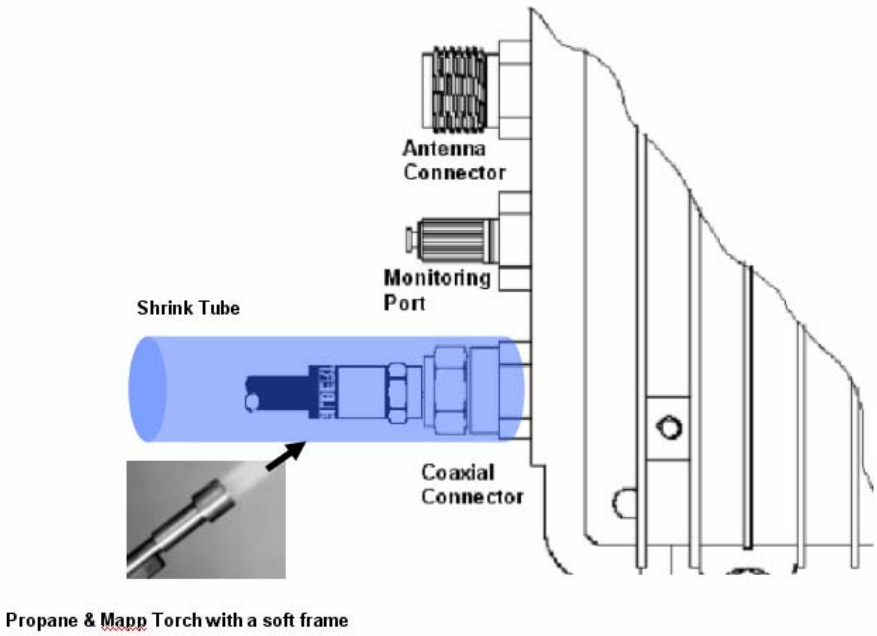

Procedure 1-5
Grounding APU enclosure

Action

Step	Action
1.	Loosen the grounding bolt and wind the end of the ground wire around the bolt.
2.	Fasten the bolt and the ground wire to the earth by connecting them to the earth facility.

Figure 3-23
Assembling the grounding bolt and wire

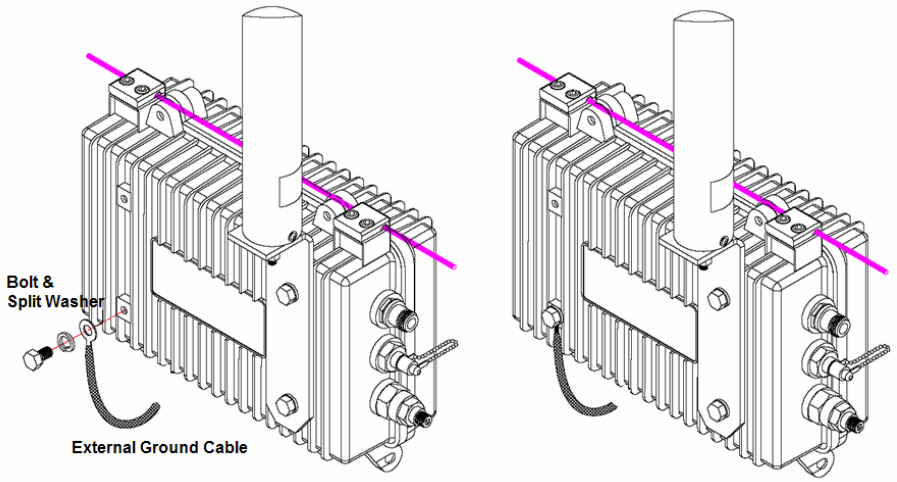

Figure 3-24
Concept diagram of APU enclosure grounding

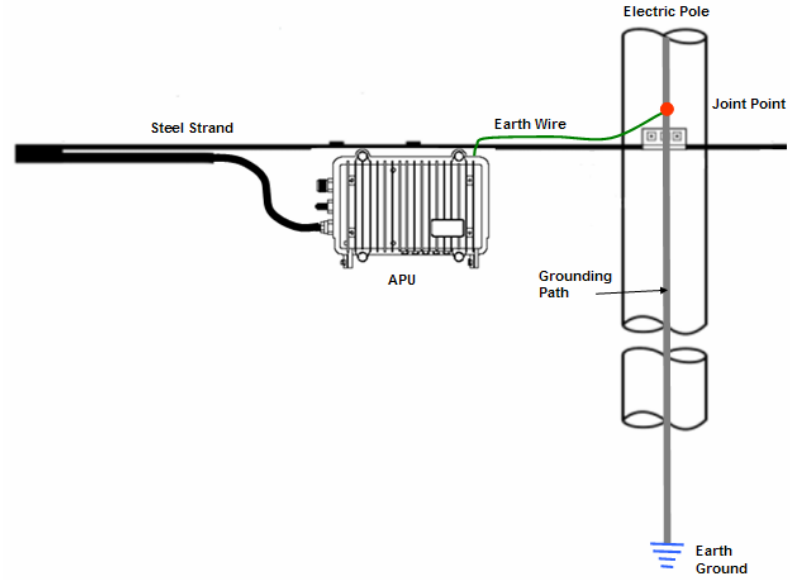

Procedure 1-6
Checking CATV Signal and Power Level and Tuning

Action

Step	Action
1.	Connect an actual coaxial cable to the coaxial port on the APU.
2.	Connect a measurement coaxial cable to the monitoring port on the APU.
3.	Measure the Signal Power level at monitoring port.

Note: In case of installation using a Trunk or Distribution Cable & Connector, it is crucially recommended to measure the RF Signal level directly at the termination of the coaxial cable from CATV AMP(TBA) or Splitter before connecting to APU in order to ensure a perfect operation of Cable Modem inside APU.

If the measured Signal level is outside from the allowed range referred in DOCSIS, you should adjust the AMP Power level or perform another proper tuning method to meet the requirement of RF signal level.
It is also recommended to measure AC voltage from CATV UPS Power Supply to ensure a perfect operation.

Note: In case of installation using a Drop Cable, it is recommended to measure the AC voltage from Local CATV Power Supply to ensure a perfect operation. But if you can confirm that a power supply facility is compliant to the power requirement of APU, this step can be skipped

4. Check if the acquired power level converted by adding 20dBmV to monitored value satisfy the range (-15dBmV ~ +15dBmV) referred in DOCSIS standard. But, some level margin should be added to the measured power level by 1 ~ 3 dB.

Figure 3-25
Measuring the Power Level at the Monitoring Port

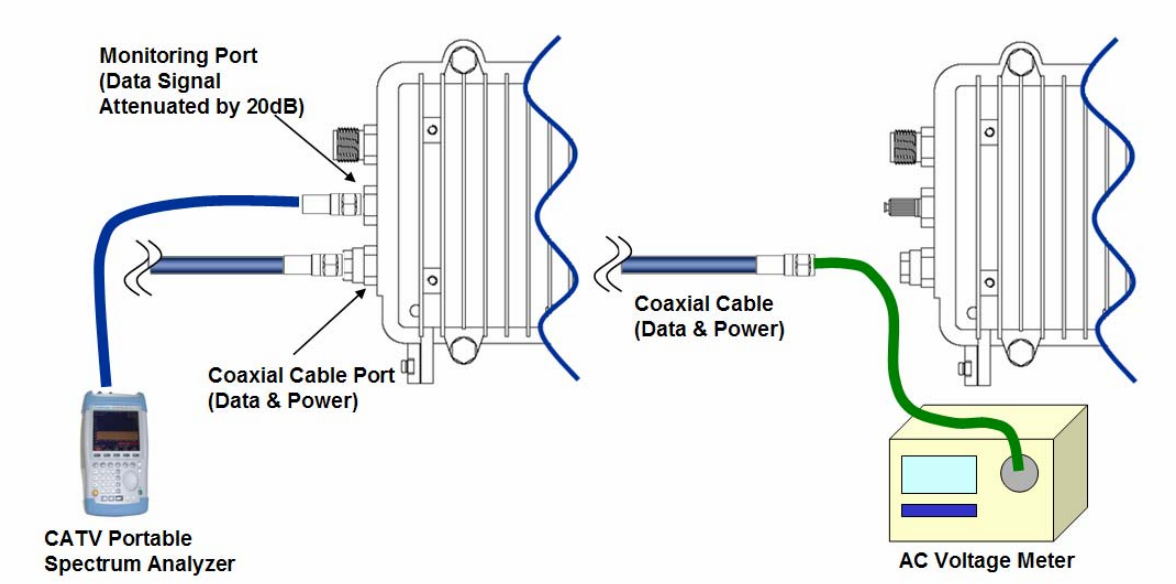

Acceptable Signal Levels

HFC Signal level (DOCSIS 1.1 ~ 2.0 Standard)
+ Standard Signal level (Actual Value): - 15dBmV ~ 15dBmV
+ Calculated Signal level at Monitoring Port (Downstream): - 35dBmV ~ -5dBmV
+ Effective Signal level at Monitoring Port (Downstream): - 37dBmV ~ -7dBmV
HFC AC Power level (Square wave): 45 VAC ~ 95VAC (Recommended level: 63Vac)

Procedure 1-7
Power ON and Visual Checking the LED Operation

Action

Step	Action
1.	Ensure that you know what each one of LED Lights means for the unit. Please refer to the LED indicators page.
2.	Turn ON the HFC Power Supply.
3.	Check if the LED operation follows the pre-defined steps during and after booting.
4.	Refer to the System Failure Analysis Procedure on the next page
5.	Check if the LED 1(Power) is ON.

Note: If there is no LED light, check if the power supply which provides the CATV (HFC) network with AC power (45 ~ 95VAC) signal is working properly and that the CATV power is detected at the end of the coaxial cable. (If any problem has been found in the power system, the unit has to be entered into a Repair Process)

6. Check if LED 2 (CM Link) flashes for over 100 seconds from when power is first supplied.
   If the LED flashes for more than 100 seconds, check if the data signal level at the monitoring port on the APU meets the recommended range of the signal level.

Figure 3-26
LED Visual Checking Procedure

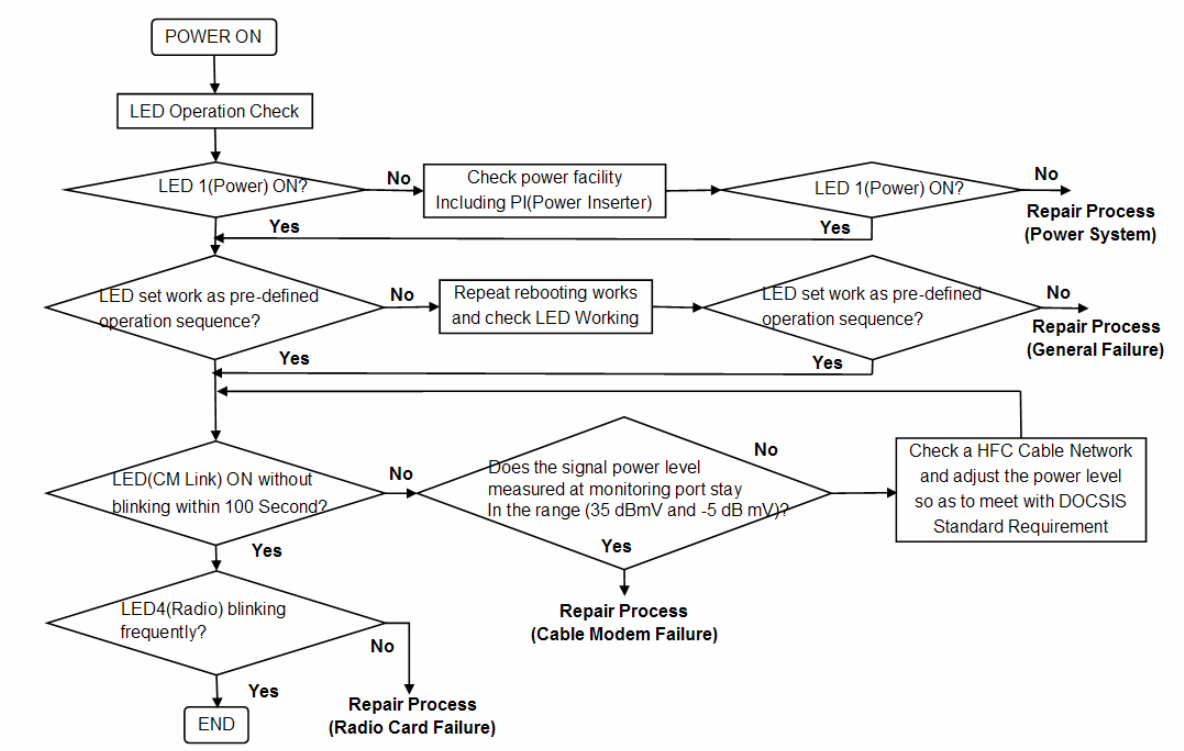

CSU Installation & Configuration

Mounting and Installation Concept

Figure 3-27
CSU Installation Concept on User's facility

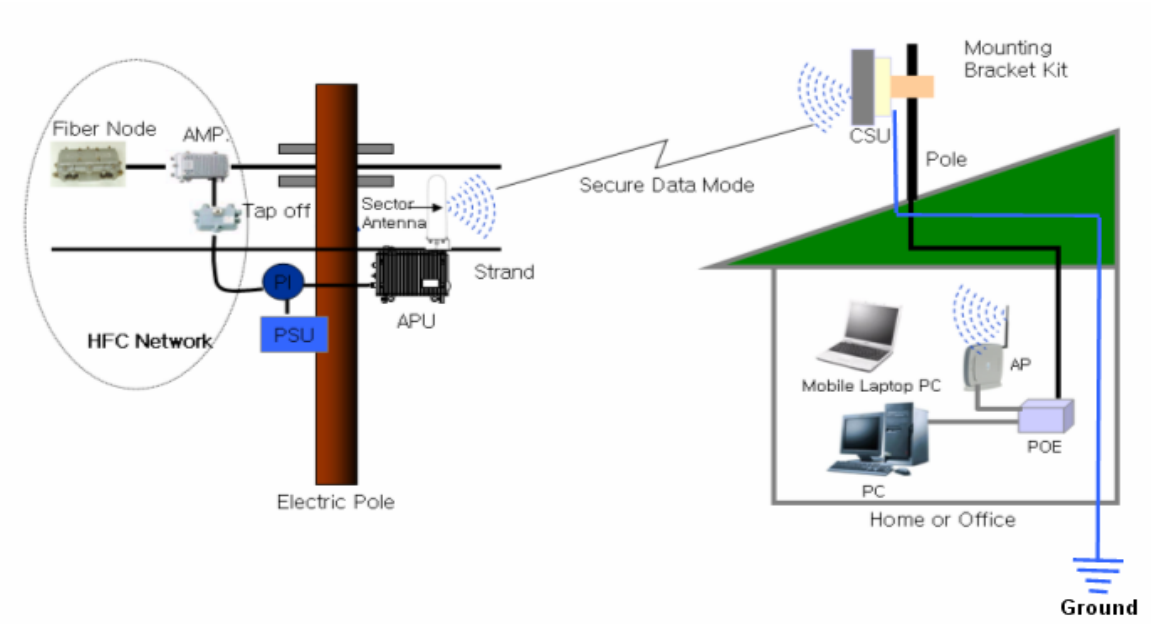

By default, CSU is pole mounted. Each unit is shipped with a pole mounting module.

ENSURE THE CSU HAS BEEN POSITIONED NO LESS THAN 3 FEET ABOVE THE GROUND, OR FROM A ROUGHLY HORIZONTAL SURFACE.

Procedure 2-1
Mounting the CSU on the Steel Wire Strand

Action

Step	Action
1.	Prior to an installation, check if the Pole has the strength and stability to sustain the weight of the CSU in a strong wind
2.	Please find a mounting tool for installing CSU illustrated in Figure 3-26
3.	Place the CSU face (RADOME side) down on a flat surface.
4.	Using the mounting tool, attach the Mounting Tilt Brackets to the back of the CSU and insert the two stainless steel M6 hex head screws and M6 split lock washers into the hole.

Figure 3-28
Assembling the mounting bracket on the CSU

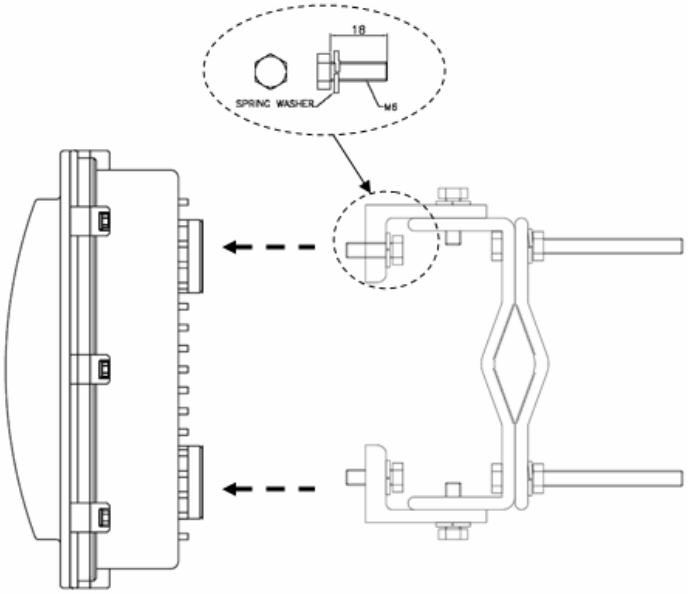

5.	Lift the CSU to the selected installation point on the pole and then attach the clamp to the original location while lashing the CSU to the pole or using a hoisting rope to keep the unit in place during mounting work.
6.	Slide two mounting nuts through a washer to each bracket hole as illustrated in Figure 3-27

7. Adjust the direction of CSU Antenna RADOME toward APU and fasten sufficiently to secure the CSU on the pole.

Figure 3-29
Assembling the mounting bracket with a installation tool

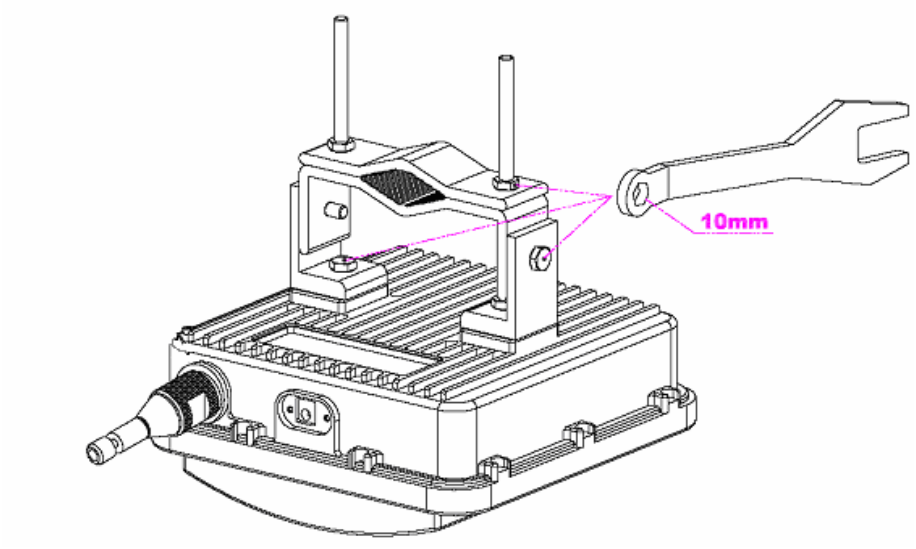

8. Adjust the up/down tilt (- 50 º to 50 º) and move the top or bottom of the CSU until the unit is roughly positioned at the correct angle and height.

Figure 3-30
CSU Pole Mounting and Antenna Tilting

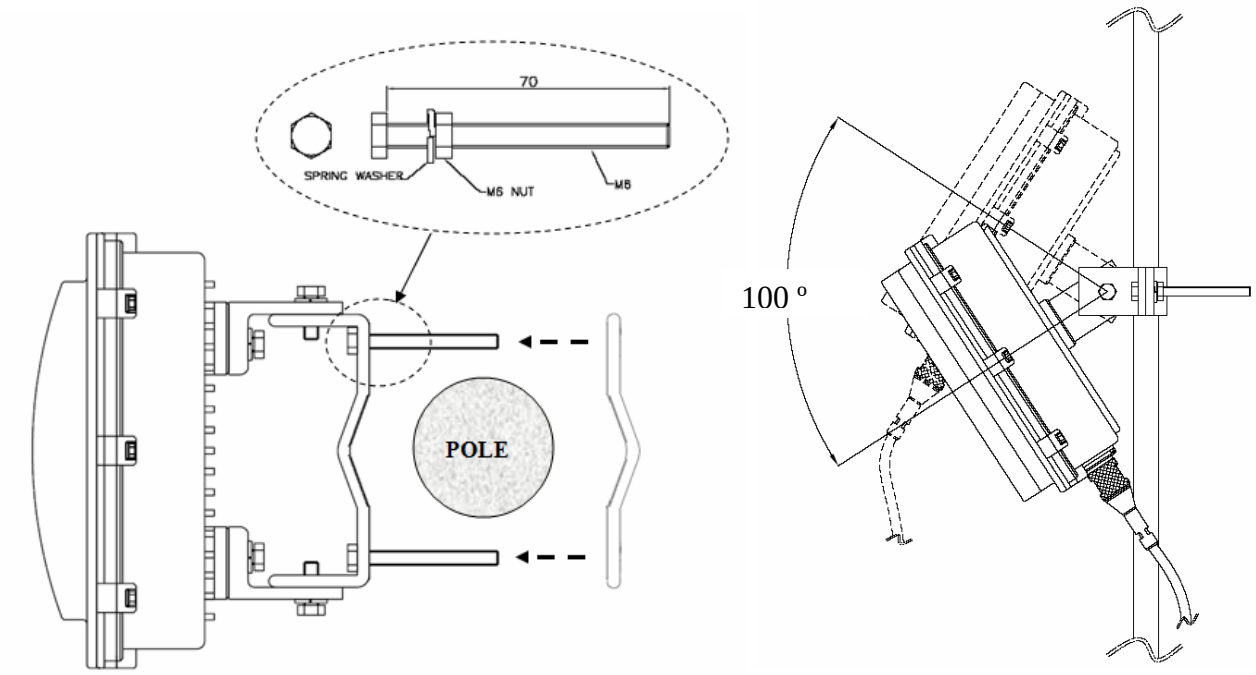

Procedure 2-2
Mounting the CSU on the Steel Wire Strand

Action

Step	Action

1. Loosen the EMI cap and slide the CAT5 or 6 cables without the RJ45 connector into the hole of the EMI hood shaped cap.
2. Follow the conventional procedure of creating a CAT5 or 6 Ethernet cable.

Note: It is recommended to use a shielded cable like S-FTP(Foiled Twisted Pair) or STP (Shielded Twisted Pair) in which wire pairs are covered with overall shield material to prevent EMI effects to or from the near electronic devices or facilities.

Note: The cable from CSU to POE Injector and from POE Injector to CPE (PC) should be a straight-through cable.

3. Connect a cable to the CSU's POE port through the hole of EMI cap and tighten it firmly.

Figure 3-31
Connecting Ethernet Cable to CSU and Securing the Port Cap.

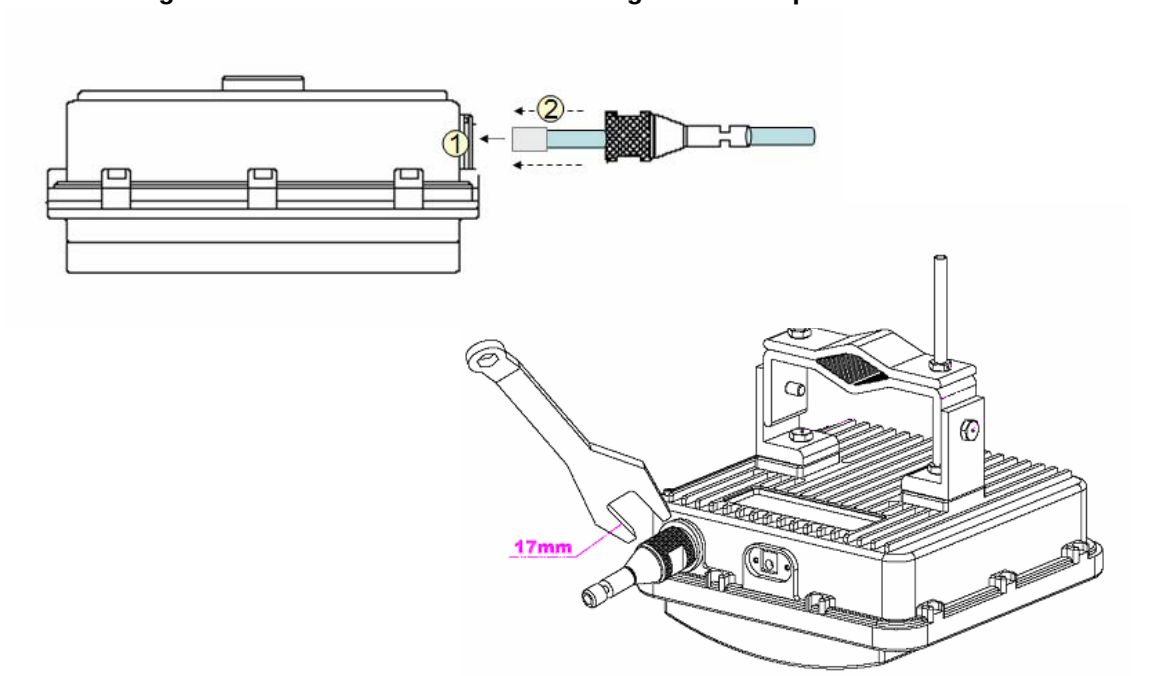

4. Secure the cable in the EMI cap by tightening it with a cable tie. Cover the connectors with black self amalgamating tape or shrink wrap tubing to ensure a waterproof seal. This is the most crucial step of the installation. If this procedure is not completed, long-term and complex problems could occur.
5. Tighten the EMI cap securely with the special tool including the product package.

WHEN INSTALLING THE UNIT, CHOOSE A LOCATION THAT PROVIDES A MINIMUM SEPARATION OF 20 cm FROM ALL PERSONS DURING NORMAL OPERATION.

Figure 3-32
Cover the EMI Cap and Shielded Cable with Tape or shrink wrap tubing

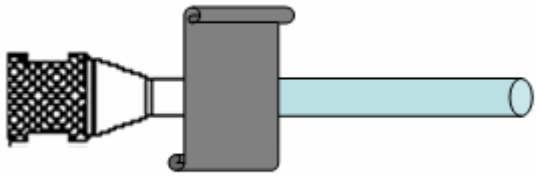

6. Connect the ground wire to the ground point at the lower right end of CSU back panel.

Figure 3-33
Connecting the ground wire to the ground point

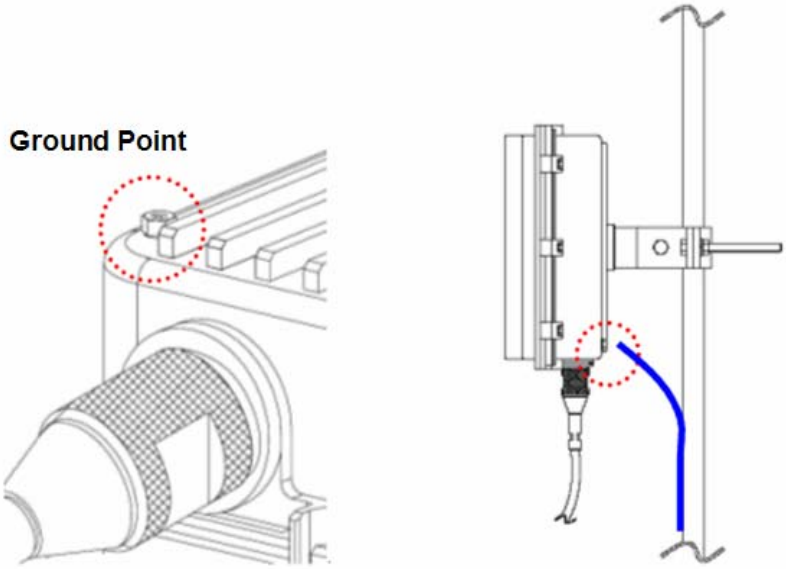

7. Connect the other end of the data cable to the POE Injector indoor.
8. Plug the power cord of the POE Injector into an electrical outlet

Figure 3-34
Connecting CSU and User PC by an Ethernet Cable though POE Injector

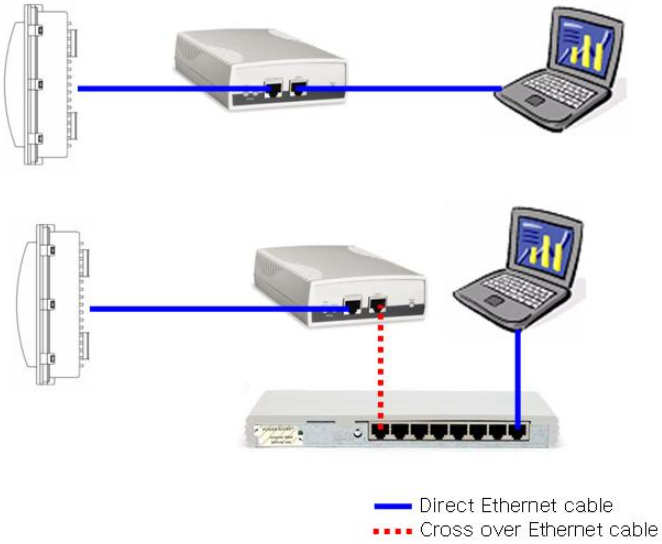

Mounting Tips

- Verify the Line-of-Sight -- Before installing the CSU, make sure a clear line-of-sight exists. Line of sight (LOS) can be defined as each antenna clearly seeing the other antenna, and seeing the remote locations when viewing from the central base location. Be sure to look level with the center of origin of the transmission (i.e., the middle of the antenna). Repeat this procedure from the remote location. Any disruption of the signal path due to trees, buildings, or any other obstructions may cause the link to function incorrectly. If you see any obstructions between two antennas, move one or both antennas to another location.
- Use mounting hardware provided to secure the unit to the pole.
- Leave the unit mounting loose enough to allow for movement when performing the alignment/testing procedure. The unit should be tightened only after the alignment/testing procedure is completed.
- Install the unit away from microwave ovens and 2.4 GHz cordless phones. Microwave ovens and some cordless phones operate on the same frequency as the unit and can cause signal interference.
- Begin at the lowest point, so the tape overlaps from bottom to top creating a shingled effect. This creates an effective barrier against water runoff. Apply this "shingle effect" to each layer of the sealing process. Apply two layers of electrical tape to the connector, and leave approximately 3 inches of cable exposed on either side of the connector.

Configuration

WLAN Cable Access Point 6220 (APU, CSU) has the following management and operational features listed below:

Software Installation

APU Basic Configuration and Operation Test

CSU Basic Configuration and Operation Test

Testing the connection between APU and CSU

Testing Wireless Network Performance

Basic Configuration

Advanced and Optional Configuration

Software Installation (AP Configurator)

The WLAN Cable AP Configurator is used to configure your wireless networking devices. Both the executable file needed to install the Configurator and the online help for the Configurator (*.chm) are included on the Software CD that you received with your hardware device. Refer to the online help or the WLAN Cable AP Configuration User Guide on the Document CD for detailed instructions on how to configure your device. This section explains the system configuration in detail.

Note: The features available to you in the WLAN Cable AP Configuration vary depending on the version of the software. This section explains all possible features involved in basic configuration. Your actual software may not display all of the features and fields described.

Installing the Configurator Software

1. Insert the Software CD into your PC's/laptop's CD ROM drive, then you can see the installation web page as below.

Figure 4-1
Software CD Starting Display

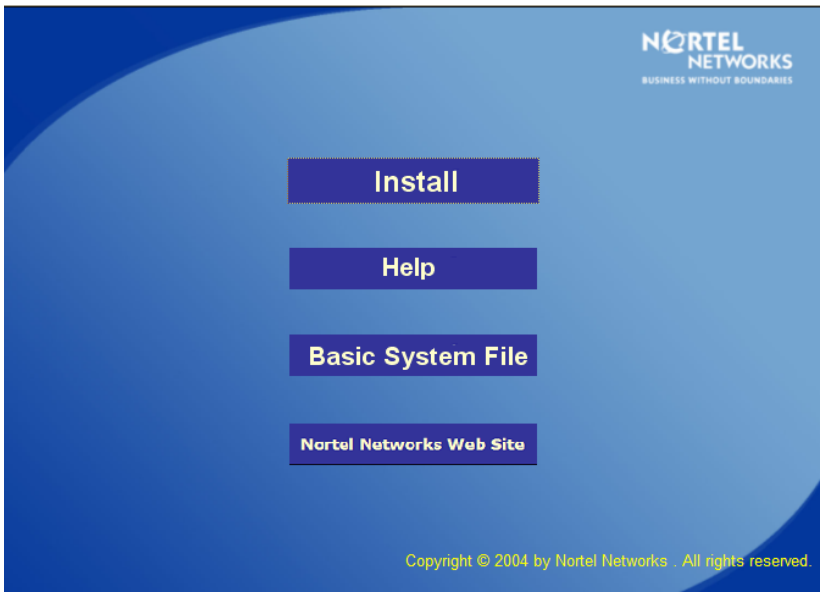

2. Click the "Install" button and press the "open" button to find the dialog box.
3. Double click the name of the Configurator Installation program (the .exe file on your Software CD).

Figure 4-2
Software Installation Launching

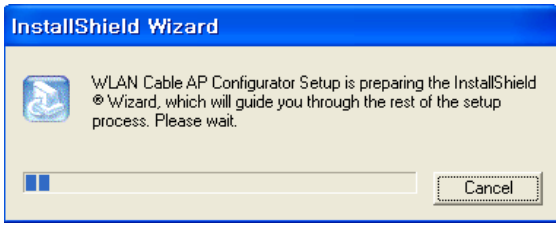

3. Follow the onscreen instructions to install the Configurator.

Figure 4-3
Installation Dialog Window

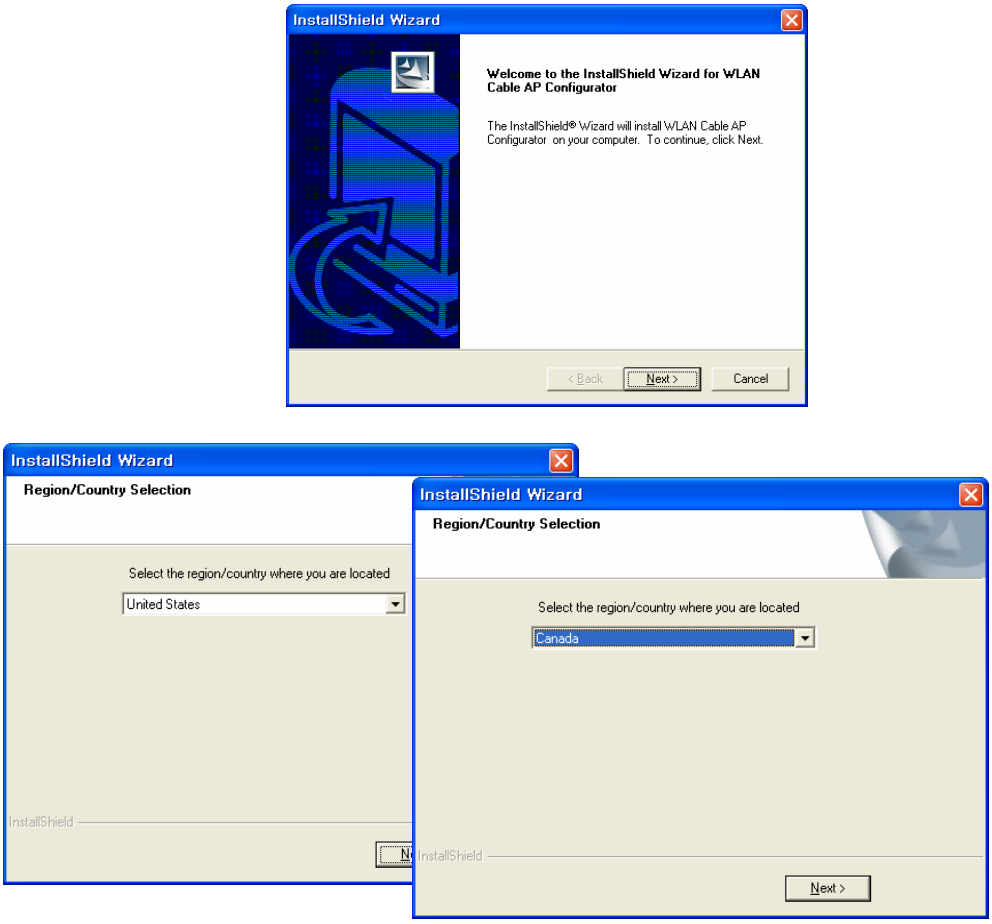

If you are installing the Configurator for the first time, files are stored in the directory Program Files/Nortel/WLAN Cable AP Configurator. If you are upgrading from a previous Configurator installation, your files will be stored in the directory where you last saved the Configurator files. The Install Shield also installs shortcuts to the Configurator on your desktop.

Procedure 3-1
APU Basic configuration and Operation Test

Action

Step	Action

1. Prepare a Laptop computer and a client unit to test and configure the APU at the installation field.
2. There are two kinds of test setups between APU and Wi-Fi Radio card as below.
   A. Type I (Radio Connection: Primary)
      This type of test setup is very simple and reliable to setup and test the operation of APU without additional accessories except PCMCIA type radio card.
      The APU operation test can be performed with only a radio connection between the APU antenna and Wi-Fi Radio Card in Laptop PC as shown in Figure 4.4.
   B. Type II (RF Cable Connection: Secondary)
      If a more secure and reliable setup is required. The APU operation test can be performed using an RF cable, between the APU antenna and the Wi-Fi Radio Card in the Laptop PC.
      This type of test setup may be a little cumbersome, but, it allows checking the APU operation and configuration in a secure environment which will exclude interference from neighboring radio devices.
      Please ensure that each cable has a different termination type at each end (APU side: N type Male, Radio card side: PC card)
3. The APU has the following factory default parameters:

Factory Default

- IP address: DHCP Client (Ethernet 1)
- Read Write Password: public
- SNMP Secure Configuration Password: public
- IEEE 802.11 Interface Setup
  - Mode Selection: 802.11 compatible Access Point Mode
  - Frequency: CH1 (2412 MHz)
  - Transmit Rate: 11Mbps
  - SSID: WLAN Cable AP
  - WEP Encryption: Disable

Figure 4-4
Test Network Configuration (Radio Connection)

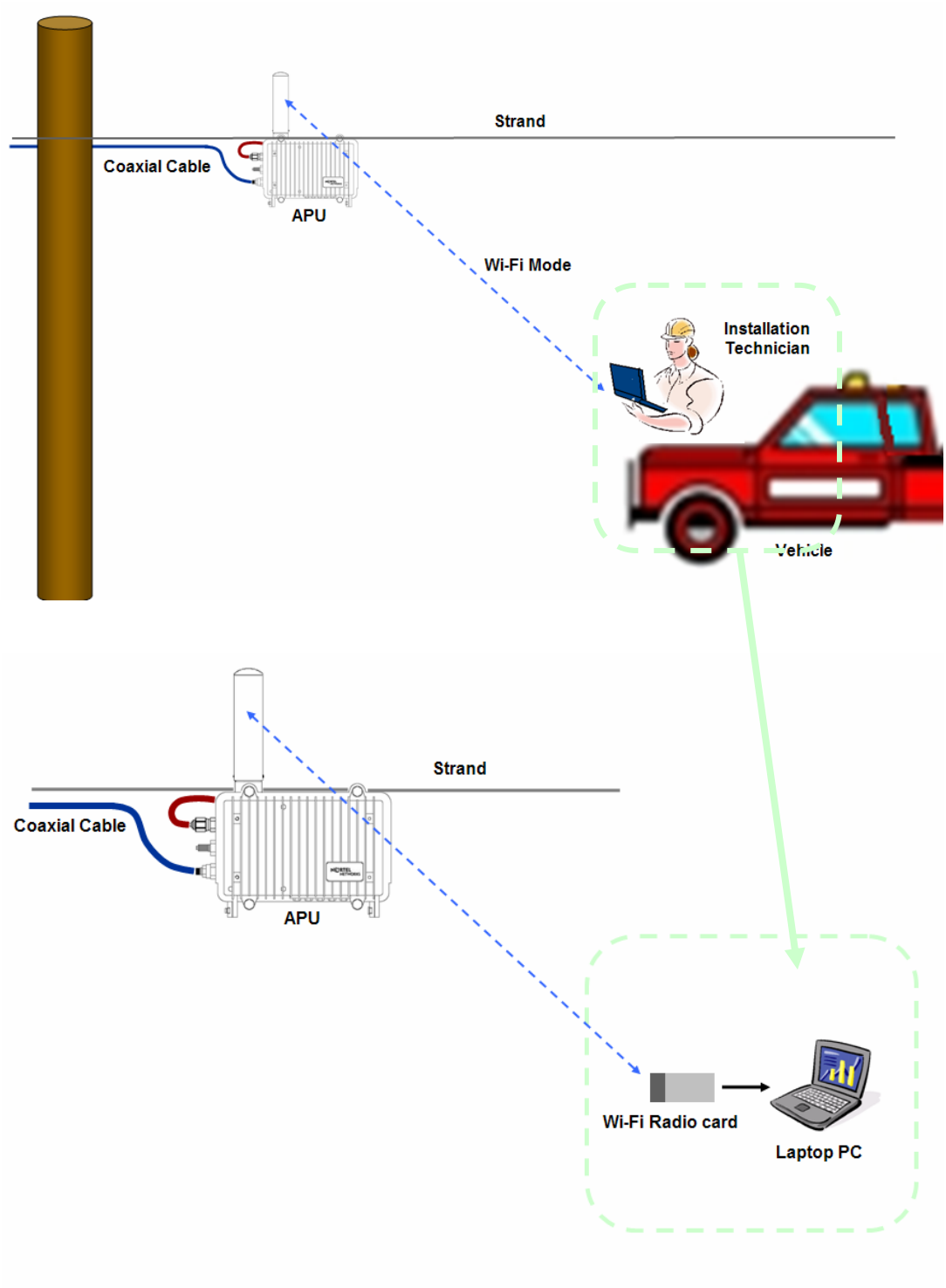

4. Using a laptop computer, search the APU by scanning its' default SSID "WLAN Cable AP" and connect to the entity and check if the radio signal shows a good performance.

5. Launch the Configurator by either double clicking the WLAN Cable AP Configurator icon on your desktop or by opening the file config.exe from the directory “C:\Program Files\Nortel\WLAN Cable AP Configurator” where software is installed
6. Run the Configurator and the IP Address for your APU (and the IP addresses for any other devices in your network) as appears in the Configurator window below.

Figure 4-5
Configurator Starting Window

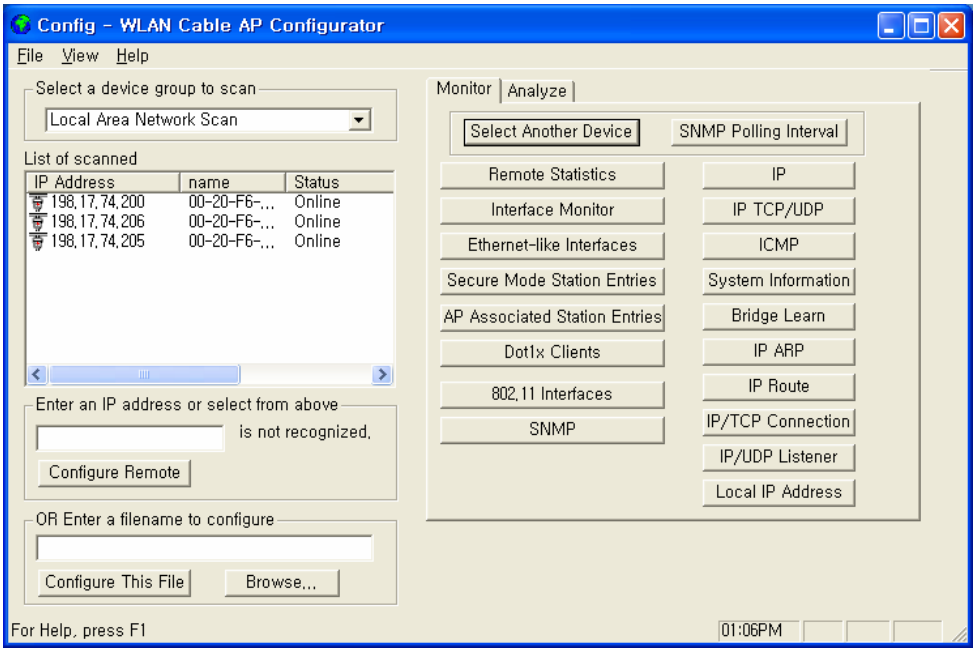

7. Ensure that the laptop computer gets an IP address from the DHCP server at Network Center by checking an IP address list box at the left side of the configurator window.
8. If the APU you wish to configure is on the same network subnet as your computer, you can select it from the list that is automatically displayed in the IP Address window. Press the <F5> key to refresh the scan list. Alternately, you can also right click anywhere in the scan window and select Re-scan the local network.

Note: To differentiate the APU to be configured, you should check the AP MAC address of the APU which is printed on the label attached on the side of the APU.

9. If you can find out the IP address of the APU on the IP address window, move the cursor to the appropriate IP address.

Figure 4-6
IP address list box

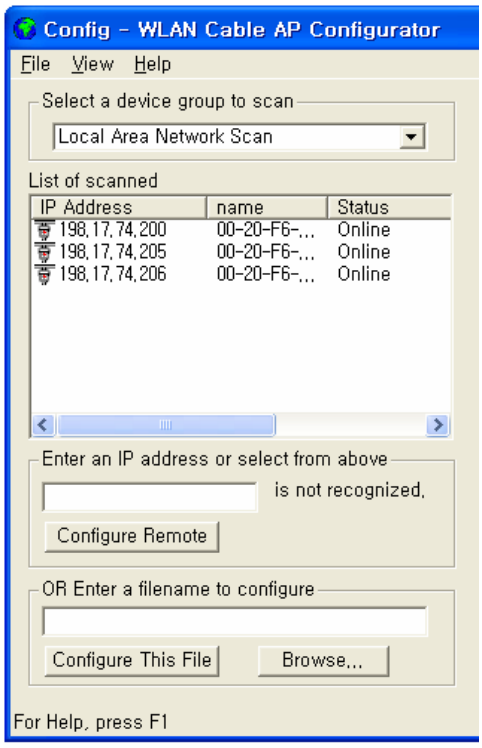

10. Right click on the IP address, and click the Configure button below the list box on the left side of the configurator window. The Read/Write Password screen is displayed, as shown below.

Figure 4-7
SNMP Password (Read/Write)

11. Enter the password “public” for the device you have selected in both text boxes, and then click the OK button.
12. If the Setup tab is displayed in the main window as shown below, SNMP checking is a success.

Figure 4-8
Setup Tab

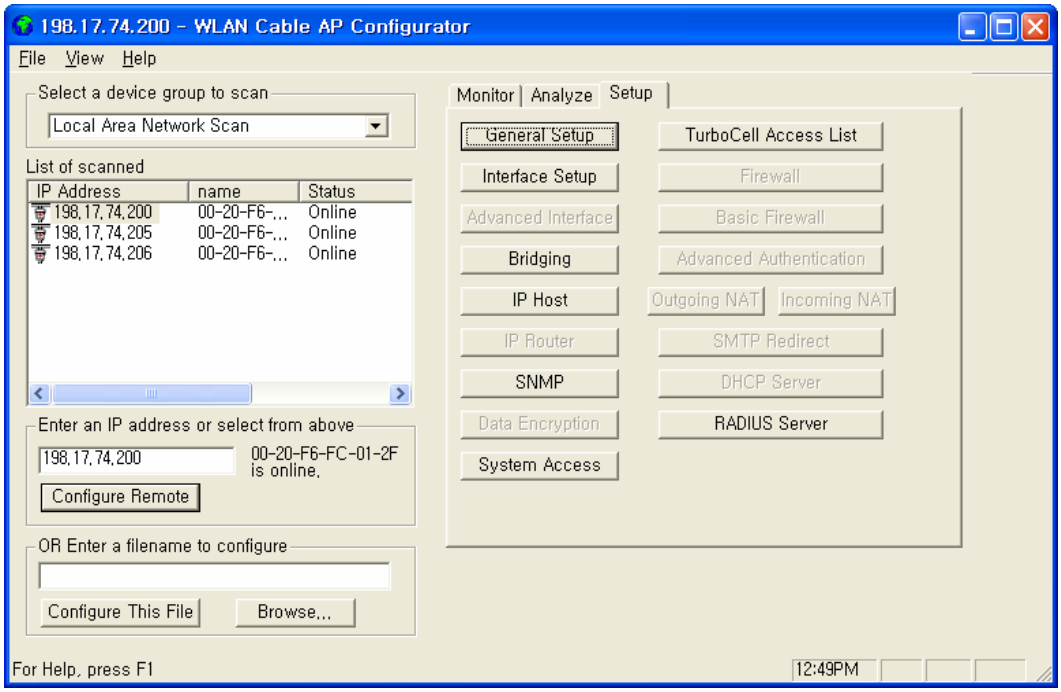

Note: When you test the APU with Test CSU, you don't have to change the parameters of the APU with the AP configurator. But, after all tests are completed, you should configure the APU according to your local network design idea.

13. Perform Ping Test to the specific IP address of network entity which is located at the public internet network during the defined minutes (1 ~ 2 minutes)
14. Click the Start Button at the left corner of the screen and the Run button.
15. Enter the command "cmd" to find out the "DOS Command window"
16. Enter the ping command "ping –t < Destination IP address > "
17. You can see the Ping response from the destination.
18. After the defined ending time, press Ctrl + "C" and record the Ping response.
19. Perform the FTP Download/Upload Test with the Test server through the Network Center or verify this functionality by accessing any commercial website with a web browser using the test laptop PC.
20. Configure the APU with your final setup parameters for one or both operation modes as Wi-Fi or Secure Data Mode (APU).
21. For a more detailed setup, refer to the procedure 3-5(Basic Configuration) and 3-6(Advanced and Optional Configuration).

Procedure 3-2
CSU Basic configuration and Operation Test

Action

Step	Action
1.	Connect the Ethernet cable (straight) between the Laptop PC and CSU via POE Injector.
2.	Launch the Configurator by either double clicking the WLAN Cable AP Configurator icon on your desktop or by opening the file config.exe from the directory “C:\Program Files\Nortel\WLAN Cable AP Configurator” where software is installed.
3.	The Configurator will open and the IP Address for your APU and Test CSU (and the IP addresses for any other devices in your network) will appear in the Configurator window as shown below.

Figure 4-9
Configurator Starting Window

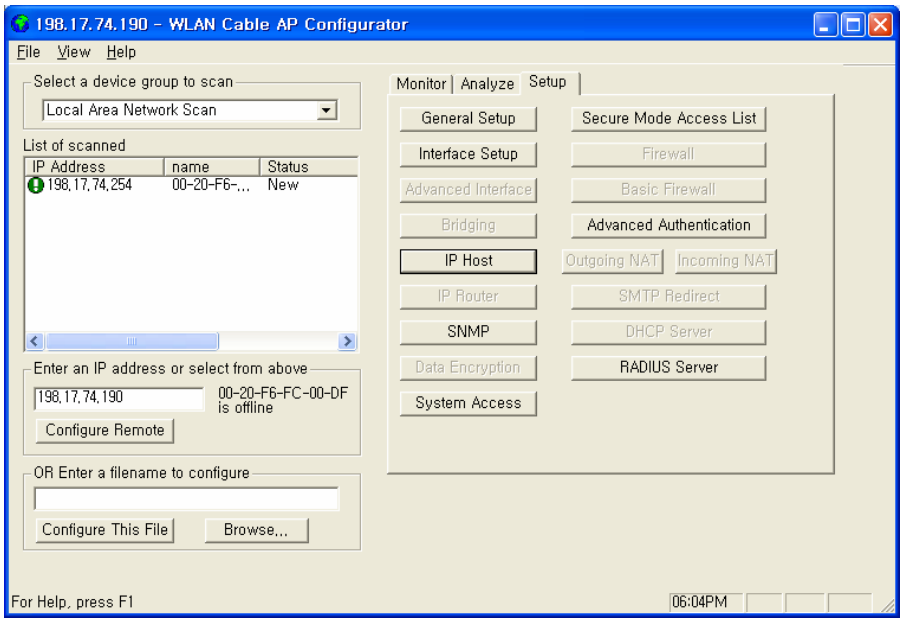

4. Note the device in the List of Scanned Devices window showing the green exclamation point”198.17.74.254”. This is the device (CSU) you need to configure. Right click on this device, and then select ‘Configure This Device’. The Change IP window is displayed, as shown in the following screenshot.

Figure 4-10
IP setup dialog box

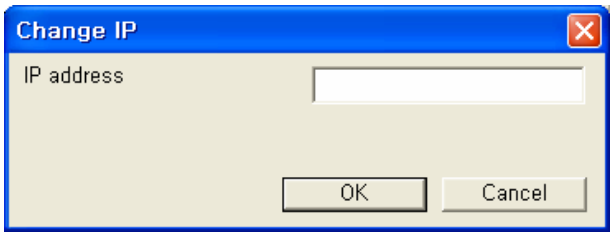

5. Enter an IP address that will be local to the IP of the PC/laptop running the Configurator, and then click the OK button. The main window is redisplayed.

   For example, in case the IP address of Laptop computer is 192.168.0.100/24, the CSU will be allowable in 192.168.0.1/24 ~ 192.168.0.254/24 as the IP address subnet group.

Note: The IP address to enter should be included in the same subnet area with PC/Laptop Computer for access to CSU.

6. The SNMP Password dialog box is displayed, as shown below.

Figure 4-11
SNMP Read Write Password dialog box

7. Enter a proper password in the basic SNMP password box.
8. Click the OK button.
9. The Interface Setup screen is enabled and displayed, as shown in the Figure 4-12
10. Click the Interface Setup button. The Interface Setup screen is displayed, as shown in Figure 4-13. And you do not need to set up the Ethernet Interface.
11. If you have an 802.11b radio card, click the Setup 2 button to set up the 802.11b interface.
12. Click the Setup 2 button. The IEEE 802.11 Setup screen is displayed, as shown in Figure 4-14.

Figure 4-12
AP Configurator Main window

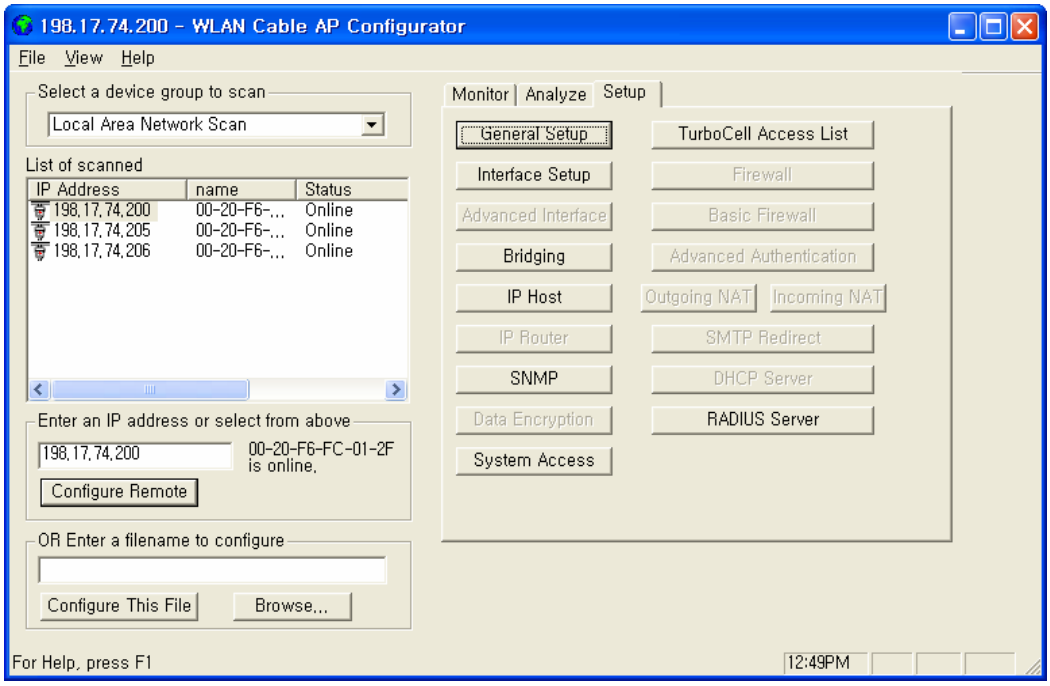

Figure 4-13
Interface setup dialog box

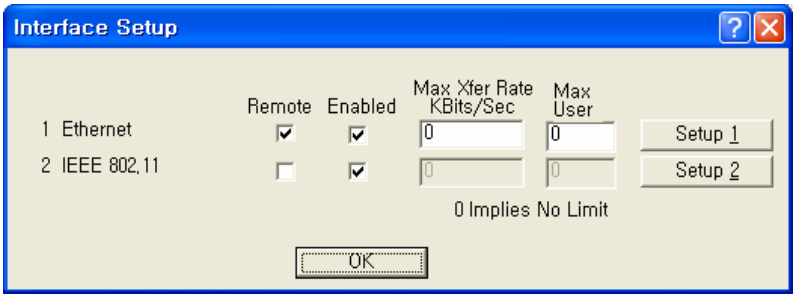

13. Make sure the CSU Secure Data Mode in the left portion of Mode Selection is selected.
14. Select the Enable Signal Quality Front Panel Display checkbox if your unit has a front panel display that is capable of displaying the signal quality.

Figure 4-14
Interface setup dialog box

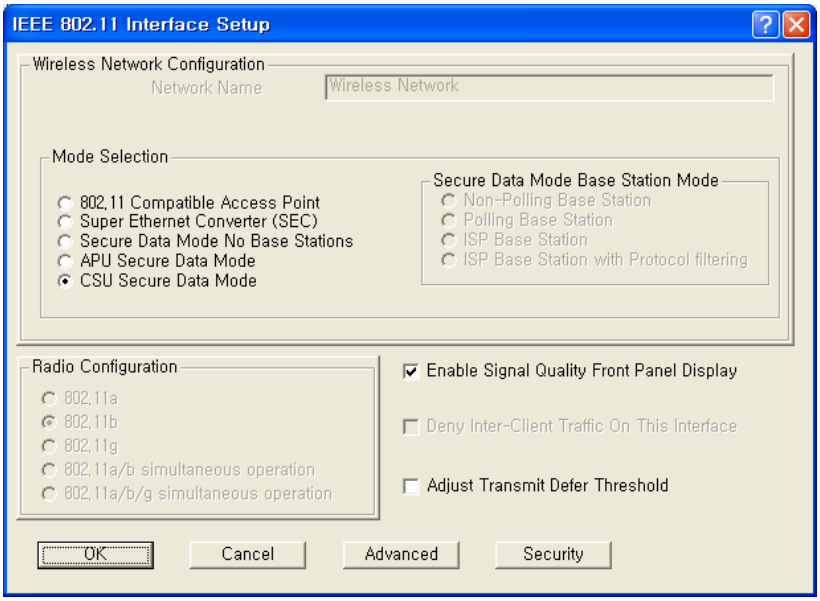

15. Click the Advanced button to set up crucial parameters such as Radio Frequency, Transmit Rate (Bandwidth) and Network ID.
16. The 802.11b Advanced Setup screen for a Secure Data Mode is shown below.

Figure 4-15
Advanced setup dialog box

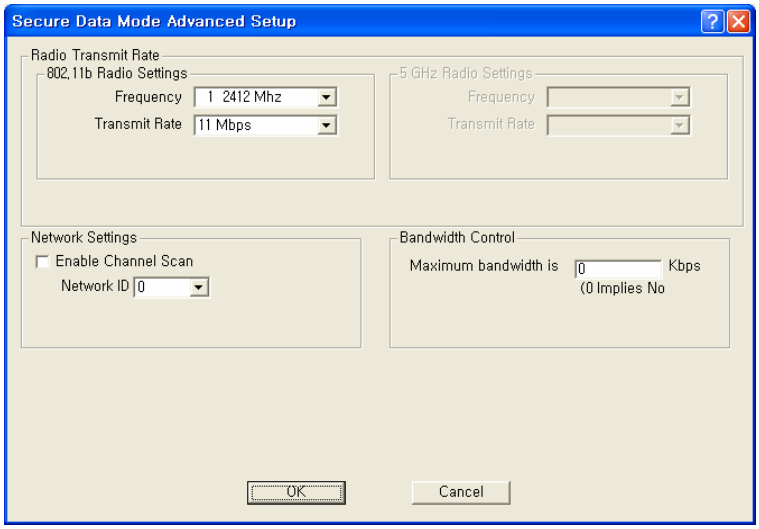

17. Select the Frequency and Transmit Rate in 802.11b Radio Setting.
18. Select the Network ID in Network Settings.
19. In case you only know the Network ID, enable the auto channel scan by checking the checkbox in the networks setting box.

20. Please see appendix G “Wireless Network Planning”.

Note: the Secure Data Mode network ID number (0-15) is used to differentiate between multiple Secure Data Mode stations using the same System Access Pass Phrase. This is used to allow a Secure Data Mode CSU to specify the APU that it wants to connect to if two APUs can be seen by the same CSU. Generally, this value should be the same as the Channel Number.

Note: The Radio Transmit Rate should be chosen from the following list while considering the service level of the user.

- Auto-select (IEEE 802.11 only)
- Low (1 Mbps)
- Standard (2 Mbps)
- Medium (5.5 Mbps)
- High (11 Mbps)

Note: The channel/frequency values are usually determined by network administrators. If you set the channel and frequency, ensure that there are at least four numerical channel differences between two overlapping cells to avoid interference. For example, channels 1, 6 and 11 don’t overlap, but channels 1 and 3 do.

21. Click the Setup → IP Setup button. The IP Setup screen is displayed, as shown below.

Note: The IP Setup screen allows you to set the Secure Data Mode Station's IP Addressing information. The Secure Data Mode Station must have an IP address assigned to it if you wish to connect to it using the Configurator tool, which makes use of SNMP to connect to the Secure Data Mode Station.

22. Select “2 IEEE 802.11” as the interface which is used to get DHCP IP address from DHCP Server.

Note: You can choose to set up the APU to obtain an IP address from DHCP server. If you select this option, you must also choose the interface on which you would like the APU to send the request. This option causes your APU to send a broadcast request for its IP address, subnet mask, and default router over the given interface at APU startup time. If you select the DHCP option, it is recommended (though not required) that you set up your DHCP server to always provide the same IP address to this Secure Data Mode Station system.

23. For a more detailed setup, refer to the procedure 3-5(Basic Configuration) and 3-6(Advanced and Optional Configuration).

Figure 4-16
IP setup dialog box

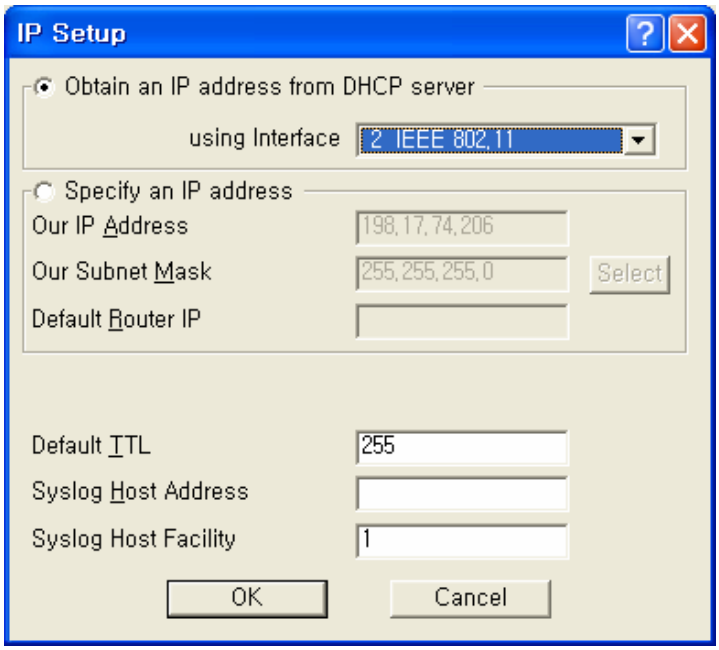

Procedure 3-3
Testing the connection between APU and CSU

The Configurators' Wireless Link Test screen is used to diagnose the wireless link quality between your APU and any CSU associated with the APU.

The Wireless Link Test displays the diagnostic counters that apply to the radio interface and a single remote station connected to this APU.

To assess the overall wireless performance in the wireless area served by the APU, you might need to run Remote Link Tests with multiple CSUs (one by one).

Action

Step	Action

1. Prepare a Laptop computer and configure the test network as shown in Figure 4-17.
2. Prepare a CSU module, POE Injector and Power supply system like a Power booster in a vehicle or regular power outlet in the home.

Note: Ensure that the CSU and the Laptop computer are set to DHCP Client so that they can get the IP address dynamically through the APU from the Server.

3. The CSU has the same system parameters as the APU. Set the system parameter as follows to test connection.

Table 4-1
System Main Parameters

Parameter	APU	CSU
IP address	DHCP Client	DHCP Client
Read Write Password	User-specific	User-specific
SNMP Secure Configuration Password	User-specific	User-specific
Mode Selection	APU Secure Data Mode	CSU Secure Data Mode
Base Station Mode	Polling(Primary)	N/A
Frequency	User-specific	Auto scanning support
Transmit Rate	User-specific	User-specific
Network ID	User-specific	User-specific
Others	User-specific	User-specific

Figure 4-17
Test Network Configuration (Maintenance & Testing Setup)

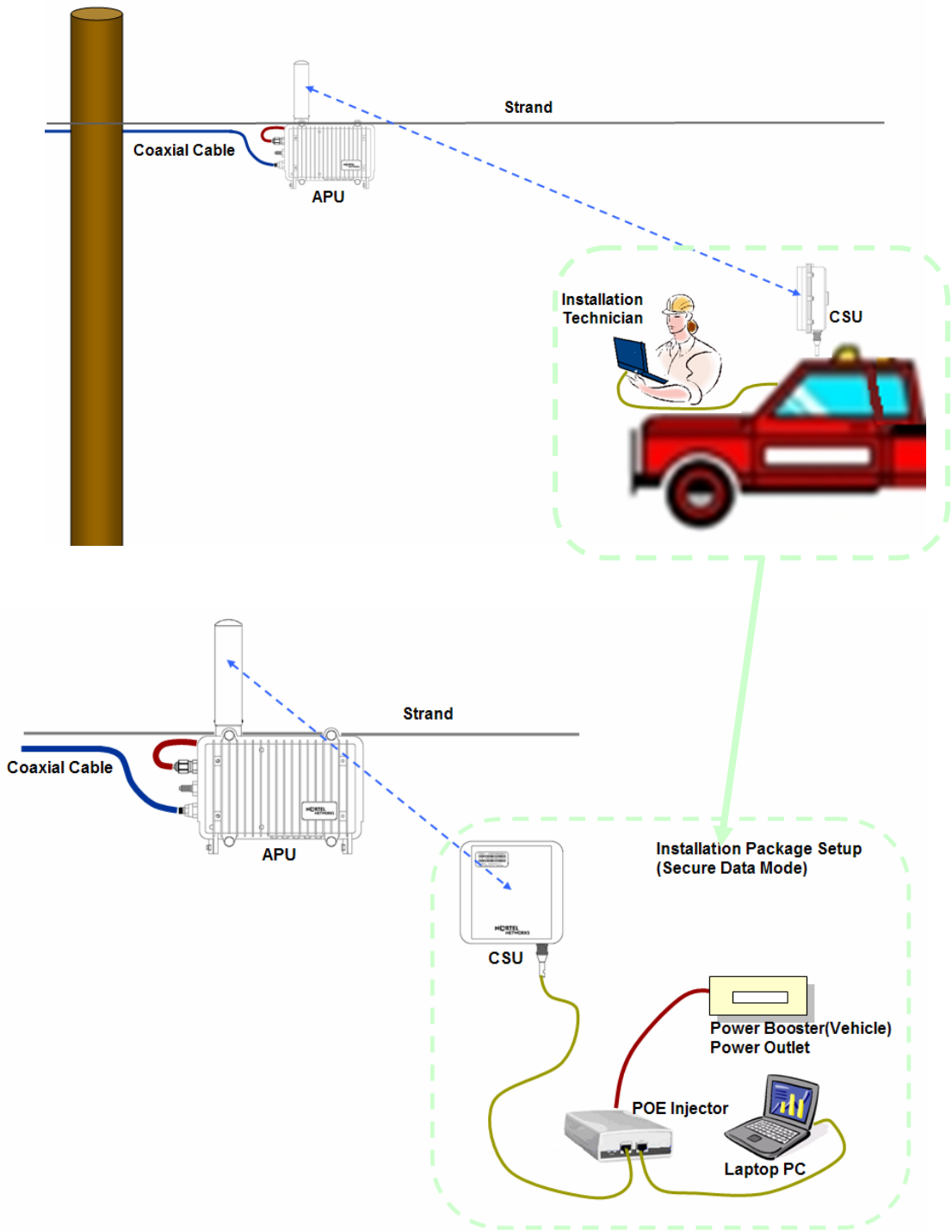

4. Launch the Configurator by either double clicking the WLAN Cable AP Configurator icon on your desktop or by opening the file config.exe from the directory “C:\Program Files\Nortel\WLAN Cable AP Configurator” where software is installed.

5. The Configurator runs the IP Address for your APU and the Test CSU (and the IP addresses for any other devices in your network) appears in the Configurator window, as shown below.

Figure 4-18
Configurator Starting Window

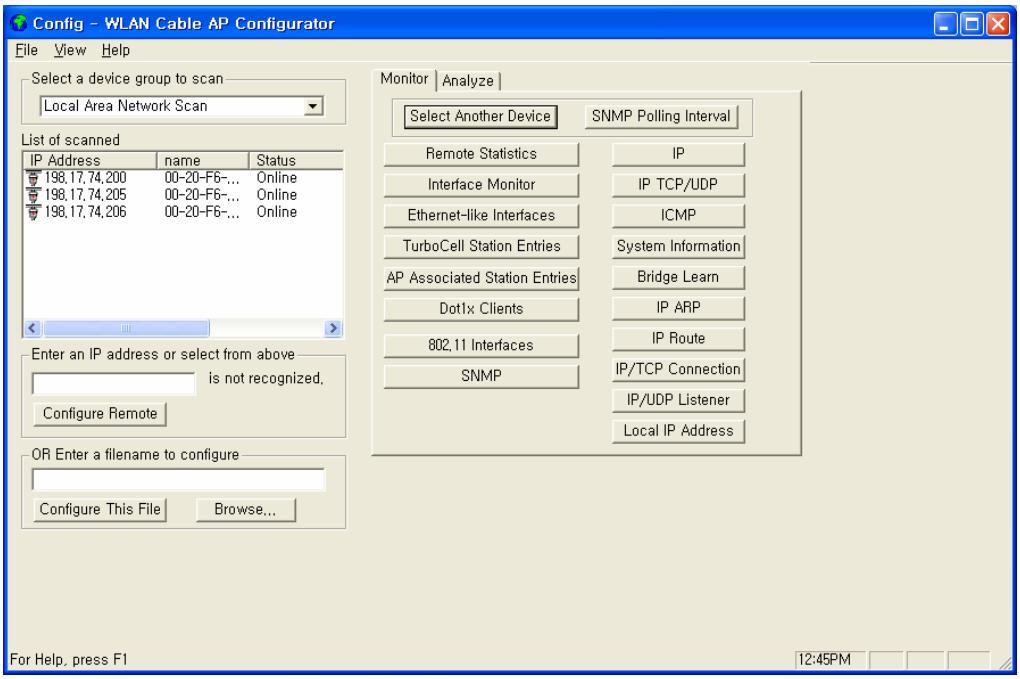

6. Ensure that the laptop computer gets an IP address from the DHCP server at Network Center by checking an IP address list box at the left side of the configurator window.
7. Check if a Dynamic IP address is allocated to APU and Test CSU.
8. If the APU you wish to configure is on the same network subnet as your computer, you can select it from the list that is automatically displayed in the IP Address window. Press the <F5> key to refresh the scan list. Alternately, you can also right click anywhere in the scan window and select Re-scan the local network.

Note: To differentiate the APU to be configured, you should check the AP MAC address of the APU which is printed on the label attached to the side of the APU.

9. If you can find out the IP address of the APU on the IP address window, move the cursor to the appropriate IP address.

Figure 4-19
IP address list box

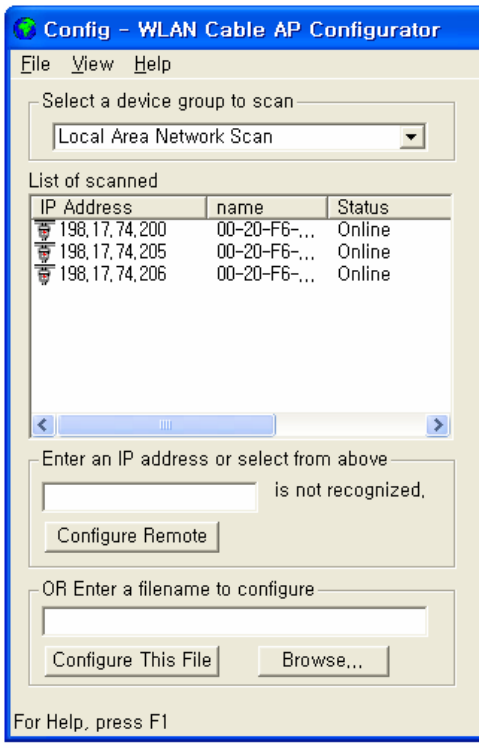

10. Right click on the IP address, and click the Configure button below the list box on the left side of a configurator window. The Read/Write Password screen is displayed, as shown below.

Figure 4-20
SNMP Password (Read/Write)

11. Enter the password “public” for the device you have selected at both text boxes, and then click the OK button.
12. If the Setup tab is displayed in the main window as shown below, SNMP checking is a success.

Figure 4-21
Setup Tab

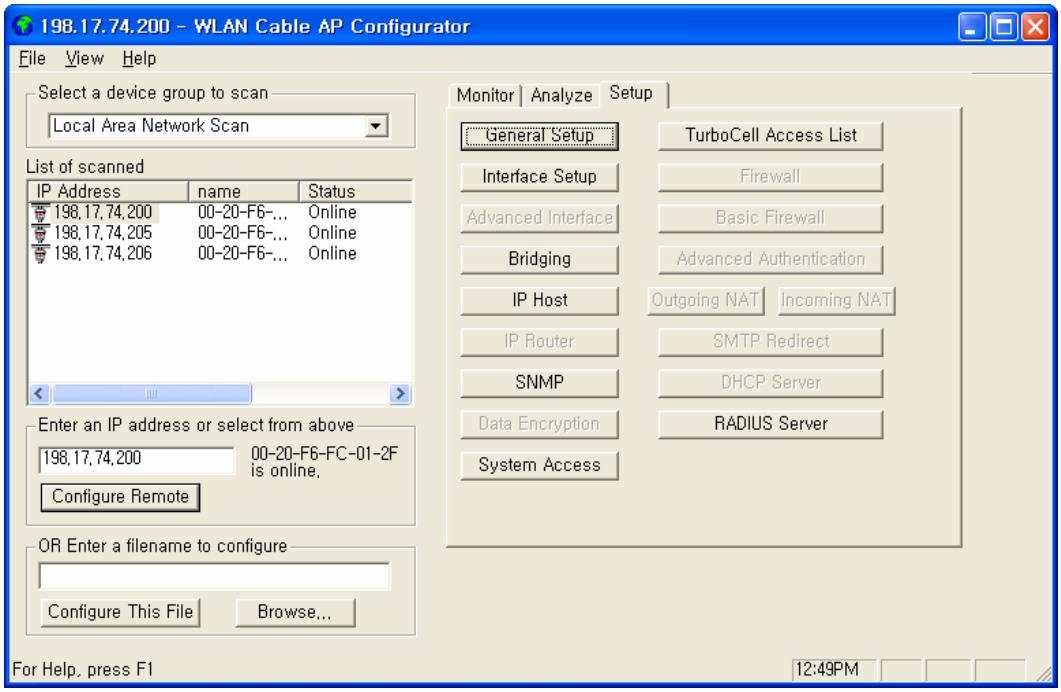

Note: When you test the APU with Test CSU, you don't have to change the parameters of APU with AP configurator. After all the tests are completed, you should configure the APU according to your local network design idea.

13. Select Wireless Link Test from the Analyze Tab. The Enter IP Address screen is displayed, as shown below.

Figure 4-22
SNMP Password (Read/Write)

14. Enter the Remote IP Address and Read/Write password for the wireless station you wish to test. The Select a Remote Link Partner screen is displayed, as shown below.

Figure 4-23
Remote Link List window

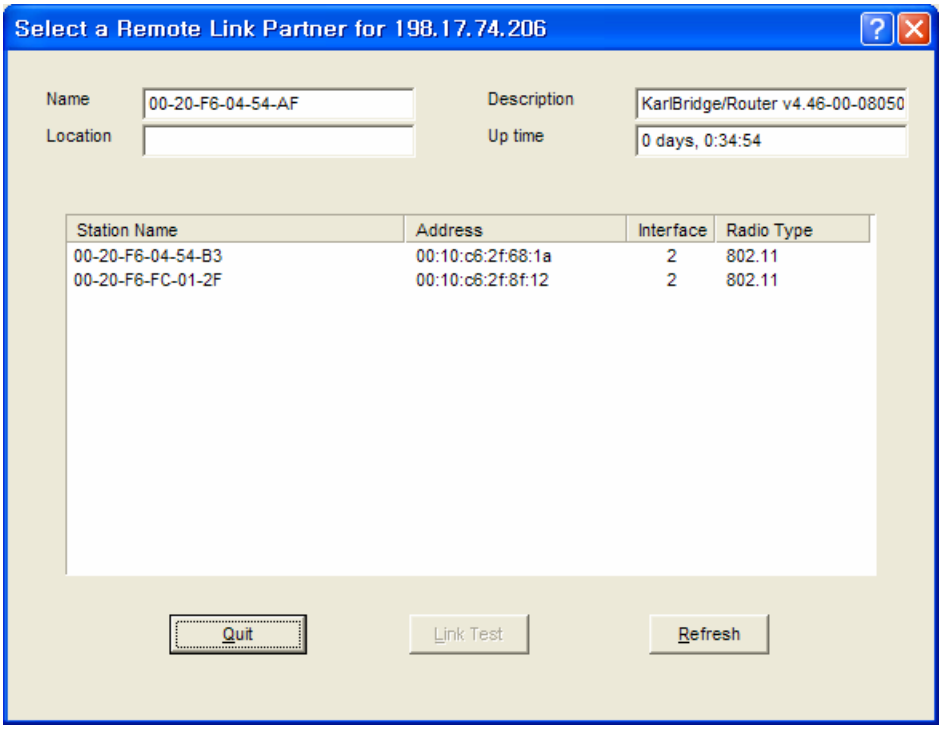

15. From the list of station names, select the remote station or client you wish to test. Select a station from the list, and then click on the Link Test button to perform a link test.

    Note: Clicking the Explore button refreshes the list of stations that can be selected.

16. Click the Link Test button to start the link test.

    Note: When you open this screen, the base station will need approximately 20 seconds to build the list of stations and forward this information to your configurator station. Due to the dynamic characteristics of mobile wireless stations, the base station will rebuild the list of connected stations each time you select a different station, or after clicking the Explore button. If this screen does not display any station, there might be no wireless station up and running in the vicinity of the selected base station.

17. The Remote Link Test screen displays the results of your wireless link test, as shown below.

Figure 4-24
Remote Link Test Status Window

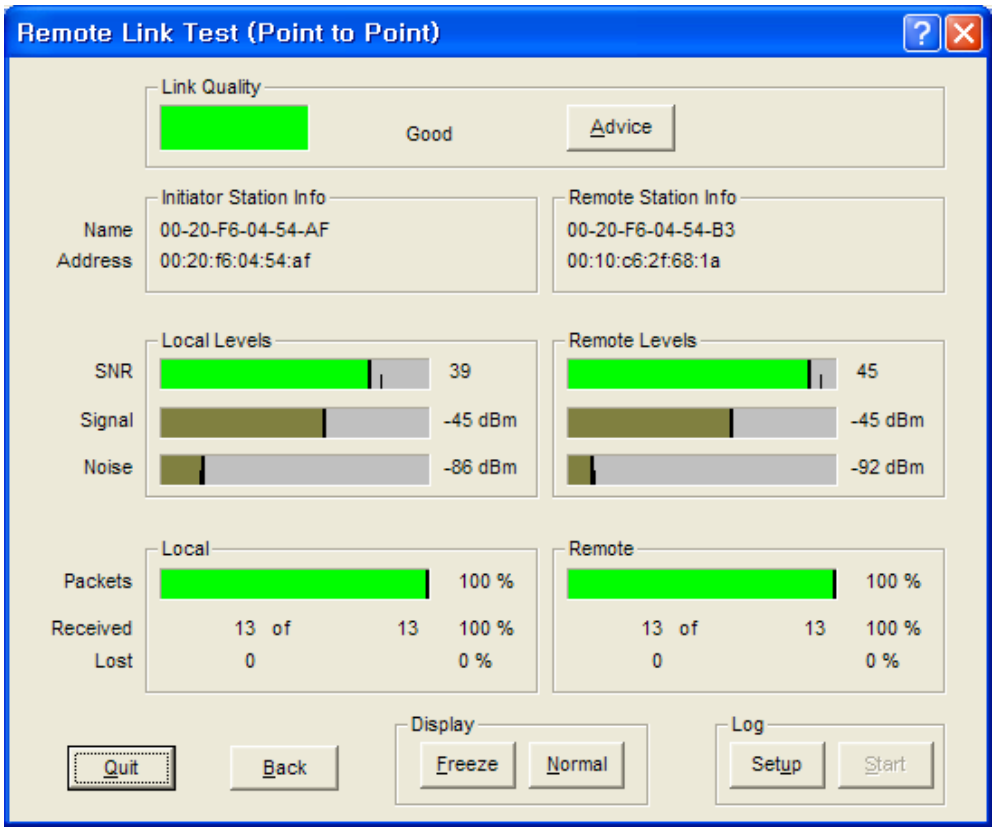

18. The advice button enables you to investigate the outcome of the Remote Link Test assessment in more detail and provides you with troubleshooting hints to improve the quality of the link between the two remote nodes. The following table summarizes the possible results of clicking the Advice button, and what action is warranted based on the results:
19. It is necessary that you adjust the vertical tilt and horizontal angle toward APU at the mounting point of CSU, while monitoring the RF link quality status window so that the SNR and Link status bar for the best quality.

Table 4-2
Radio Link Status

Status	Risk	Action
Excellent	None	▪ You do not need to perform further diagnostics.
Good	None	▪ You may try to optimize antenna placement to see whether this will improve the Link Quality result.
Marginal	Communication is still possible, but this situation may affect the unit's performance.	▪ View Link Test Details to verify. The unit may have to retransmit lost packets. ▪ Verify the Signal Level indicator. A low Signal Level indicates the unit has moved away from the base station. ▪ View Link Test Details to verify the Noise Level indicator. A high Noise Level indicates a source of interference in the signal path between the unit and the base station. ▪ Select another unit to verify if the base station is functioning properly. ▪ Try to optimize antenna placement to improve the Signal Level or move it away from the source of interference.
“No Connection”	Communication is no longer possible. If the unit was in the process of transferring files, data may not have arrived at the intended destination, or it may have been corrupted.	▪ View Link Test Details to verify the Signal Level indicator. A low Signal Level indicates the unit has moved away from the base station. ▪ View Link Test Details to verify the Noise Level indicator. A high Noise Level indicates a source of interference in the signal path between the unit and the base station. ▪ Select another unit to verify if the base station is functioning properly. ▪ Try to optimize antenna placement to improve the Signal Level or move it away from the source of interference.

Quality Indicator is Black	None. The base station may be busy collecting diagnostic measurement results from the unit.	▪ If the indicator remains blank, click the other button to return to the Select a Remote Link Partner screen. Click the Explore button to refresh the list of Link Test Partners. If the initial partner no longer appears, it may have been switched off, or have been moved outside the range of the selected Initiator Station. ▪ Select another Link Test Partner to verify if the base station is functioning properly.

Procedure 3-4
Testing Wireless Network Performance

FTP Up/Download Test

Action

Step	Action
1.	Launch the Configurator by either double clicking the WLAN Cable AP Configurator icon in your desktop or by opening the file config.exe from the directory “C:\Program Files\Nortel\WLAN Cable AP Configurator” where software is installed.
2.	The Configurator runs the IP Address for your APU and Test CSU (and the IP addresses for any other devices in your network) appears in the Configurator window.

Figure 4-25
Configurator Starting Window

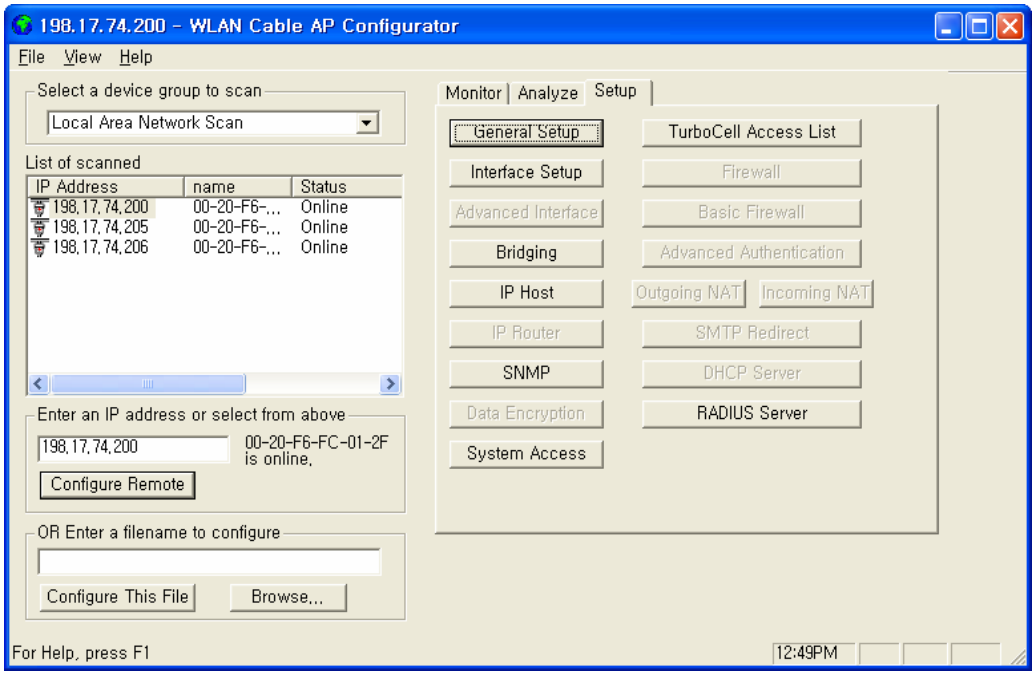

3. Make sure that the laptop computer gets an IP address from the DHCP server at Network Center by checking an IP address list box at the left side of the configurator window.
4. Check if the Dynamic IP address is allocated at the APU.

5. If the APU you wish to configure is on the same network subnet as your computer, you can select it from the list that is automatically displayed in the IP Address window. Press the <F5> key to refresh the scan list. Alternately, you can also right click anywhere in the scan window and select Re-scan local network.
6. If you know the IP address of APU on the IP address window, move the cursor to the IP address.

Figure 4-26
IP address list box

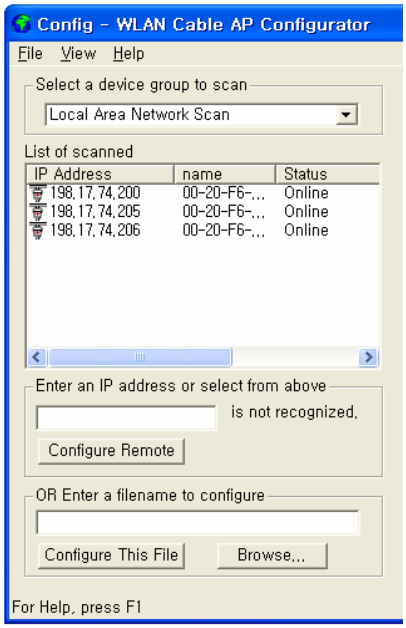

7. Perform a Ping Test to the specific IP address of network entity which is located at the public internet network during the typical minutes(1 ~ 2 minutes)
8. Click the Start Button at the left corner of windows and the Run button.
9. Enter the command “cmd” and find out the “DOS Command window”
10. Enter the ping command “ping –t < Destination IP address > “
11. You can see the Ping response from the destination.
12. After the defined ending time press Ctrl + “C” and record the ping response result.
13. Perform the FTP Download/Upload Test with the Test server through the Network Center.

Testing Wireless Network Performance (Ping Fill Test)

Action

Step	Action

1. On the Analyze tab, click the Ping Fill Test button. The Enter IP Address screen is displayed.

   Note: The above IP address should be that of the CSU (Client of APU) which can get the IP address list box at the AP configurator.

Figure 4-27
IP Address Tab

2. Enter the IP address and Read/Write Password of the Internet host with which you would like to test throughput, and click the OK button. The Ping Fill Test Parameters screen is displayed. .

   Note: To test wireless performance, the target system can be one of the APU Secure Data Mode station's clients. You can also use a wired host to test wired interface performance.

3. Enter the Test Window Size, Max Packets, and Test Running Time. Ex) Packet Length: 60, Window size: 80, Maximum Packets: 20, Number of Seconds: 5
4. Click the OK button. You will see some warning messages, and then the Ping Fill test will run. The results of the test are then displayed in the Ping Fill Results screen.
5. Choosing the correct parameters is crucial to obtain the accurate Ping Fill Test results. To find out more about each of the parameters, click in the fields shown in the screenshot below.

Figure 4-28
Ping Fill Test Parameters

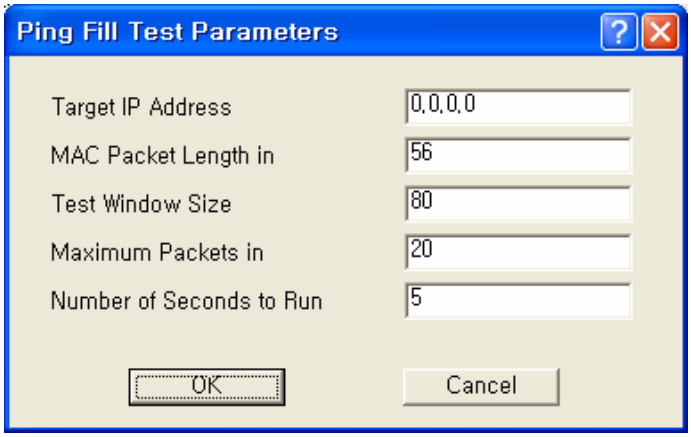

6. As soon as Ping Fill test is over, you can see the result windows as below.
7. Record the results of Average Transfer Rate.
   It is recommended that the results window be captured as a picture and saved in the file.

Figure 4-29
Ping Fill Test Results Window

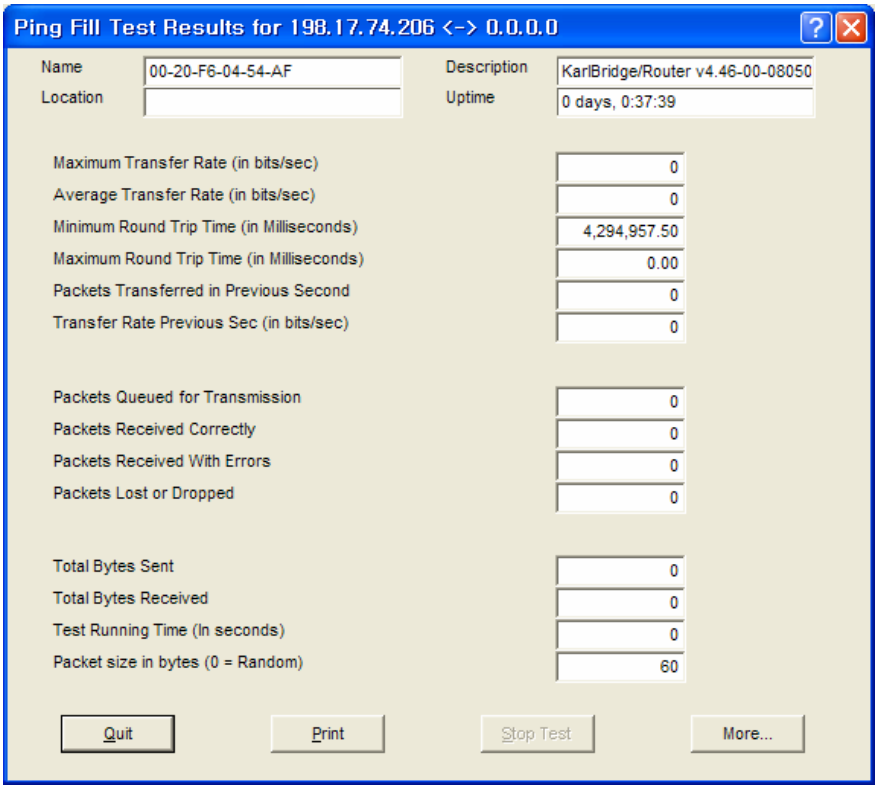

Procedure 3-5
Basic Configuration

Set Up General Configuration Options

The Setup tab is used to define the configuration options for the device, and the General Setup screen is used to enable various setup options. Click on the Setup tab, then click the General Setup button to display the General Setup screen as shown below:

Figure 4-30
General Setup window

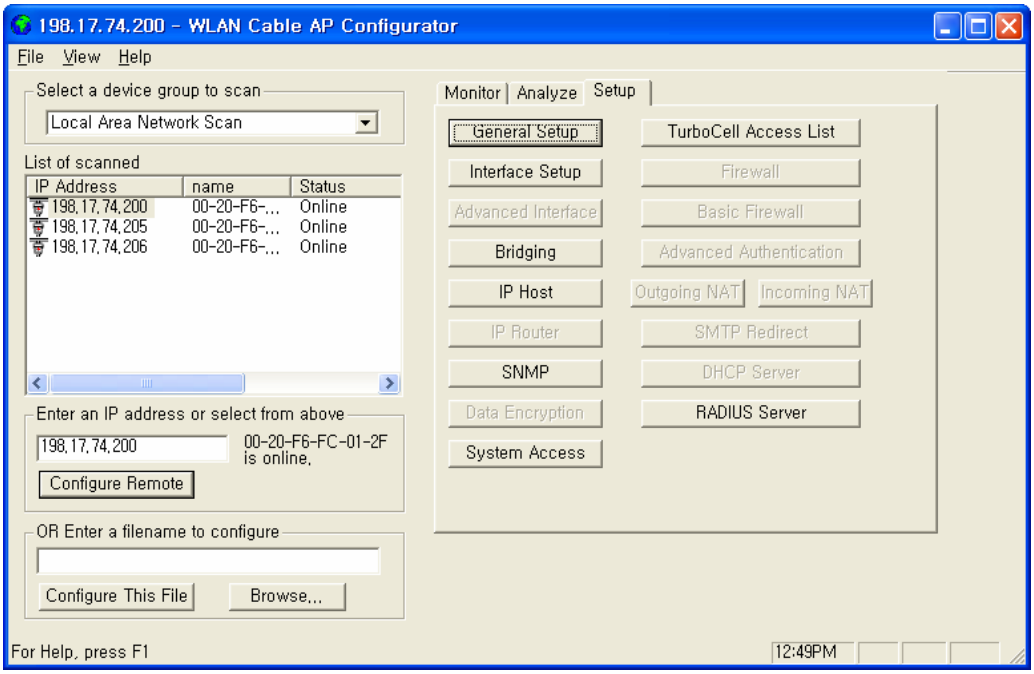

Note: This menu has been modified for use in this manual. This menu has all the supported features checked (enabled) and is NOT typical of the menu you will see. Each of the fields on the screen is explained below.

Figure 4-31
General Setup window

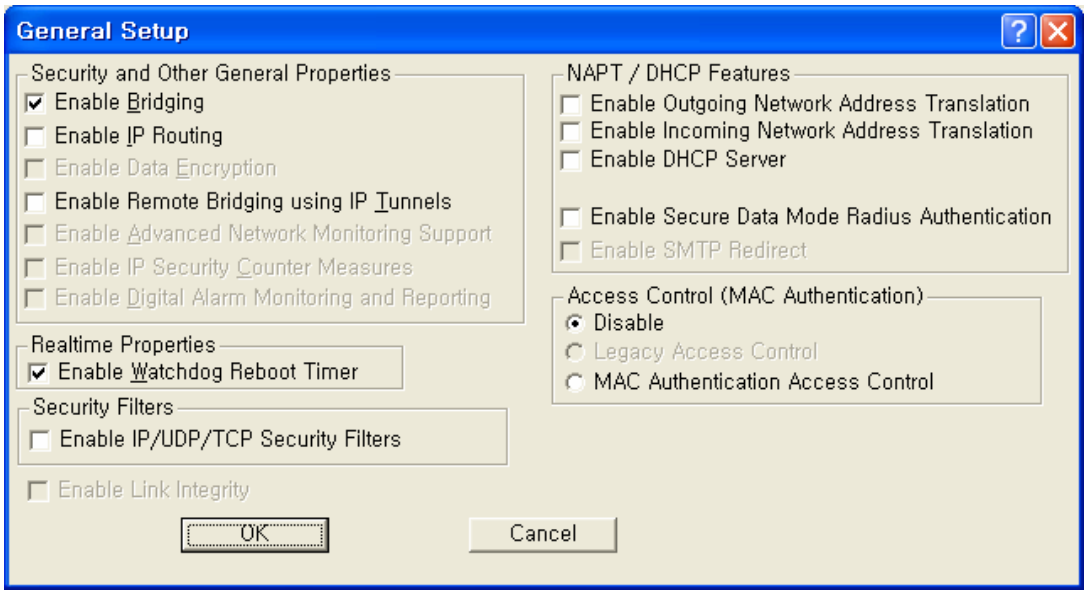

Enable Bridging

Selecting this checkbox in General Setup will allow you to access the Bridge Setup screen, which you can use to enable your device's transparent Ethernet bridging feature. This allows for the transference of Ethernet packets between physical networks connected directly to the base station.

If enabled, the base station will transfer Ethernet packets from one interface to the other (for example, between the wireless and the wired networks). The default behavior is to bridge all Ethernet protocols. You can set which Ethernet protocols to bridge or deny, as well as, Ethernet stations that will be allowed or disallowed to send packets over the bridge using Bridge Setup from the Setup tab.

If disabled, only the IP packets with correct the IP Routes set up in the IP Router Setup will be bridged between the base station's various interfaces; general Ethernet packets will not be transferred across the base station. This would be useful in a situation where you want to enable IP traffic, but not general Ethernet traffic between (sub) networks.

Enable IP Routing

Selecting this checkbox in General Setup will enable your hardware device to route IP packets between its various interfaces.

If enabled, you will need to set up routes on the IP Routing screen or you will not be able to access your hardware unit when you exit the Configurator program.

Enable Remote Bridging Using IP Tunnels

This option allows you to encapsulate Ethernet packets of any protocol in IP and then send them to another Secure Data Mode Bridge/Router to de-encapsulation. Select this checkbox to enable this capability.
Some versions of the Secure Data Mode Station support a special feature which will enable Ethernet packets of any protocol type to be encapsulated in IP and then sent to other Secure Data Mode Stations for de-encapsulation. This method can be used to set up "virtual" Ethernet LANs between several points using the IP network as the transport layer. This feature can be used to create a Virtual Private Network when used in conjunction with the Data Encryption option.

Enable Watchdog Reboot Timer

Select this item in General Setup to enable the watchdog timer reboot feature. If packets are not seen on the network for more than 10 minutes, (a very rare occurrence) the Secure Data Mode Station will reboot itself. Once it has rebooted, the 10 minute reboot timer will not activate again until a packet has been seen on one of the interfaces. This is to ensure that only one reboot will occur if the entire network is truly shut down.

Enable IP UDP/TCP Security Filters

Select this option in General Setup to enable the base station's Firewall (IP Security Filter) features. You can set the base station to explicitly or implicitly allow or deny IP connections to specific UDP or TCP ports, and/or between specific IP addresses or subnets. For more information, see Firewall Setup.
Note: This option is only available when the MAC Authentication Access Control button has been selected on the General Setup screen.

Enable Outgoing Network Address Translation

Select this checkbox if you will be using Outgoing NAT to multiplex traffic from all the computers on your internet network through the Secure Data Mode Bridge/Router.
Outgoing Network Address Translation (NAT) allows multiple computers to share a single IP address to connect to an IP network, including the Internet. This allows homes, small businesses, and Internet Service Providers to have Internet service for all of their computers without having to pay for additional IP addresses. The NAT feature

serves as a simple firewall for incoming connections, since only traffic initiated by an interior computer is permitted through the NAT.

Enable Incoming Network Address Translation

Select this checkbox if you will be using Incoming NAT to multiplex traffic from the network to all the computers on the internal network. Incoming Network Address Translations (NAT) is used to redirect requests to servers in the local address space based on the port of the request. If, for example, the client at local address 10.0.1.2 is serving web pages, and a request comes to the access point on that port for a web session, then the request will be forwarded to the web server on 10.0.1.2. The server will respond with the web page to the address of the original request.

Note: Incoming NAT only needs to be configured if servers in the local (private) Address space needs to connect with clients in the global (public) address space.

Enable DHCP Server

Select this checkbox if you are using the Secure Data Mode Bridge/ Router to provide DHCP information to the computers on your network.

Note: If you do not check this option, you will not be able to access the DHCP Server screen.

Enable Secure Data Mode Radius Authentication

Select this checkbox if you wish to enable RADIUS authentication for your Secure Data Mode stations.

Enable Network Address Translation Redirector

Select this checkbox if you wish to enable network address translation (NAT) redirection, which is used to forward the packets sent to a particular port number to a specified IP address, regardless of the original destination IP address.

Access Control Buttons

The access control buttons determine how authentication is controlled. There are three possible means of authentication control:

- Disable - Selecting Disable turns off MAC authentication entirely.
- Legacy Access Control - Selecting Legacy Access Control enables access to the Access Control Setup screen and disables access to the Advanced Authentication screen

- MAC Authentication Access Control - Selecting MAC Authentication Access Control enables access to the Advanced Authentication Setup screen, which provides more detailed MAC authentication setup options, and disables access to the Access Control Setup screen.

Set Up Interfaces

Once you have enabled various configuration options, you need to define the network interfaces for your hardware device. You will typically set up one or more of the following interfaces:
As the name suggests, the Interface Setup screen is used to set up network interfaces. From the Setup tab, click the Interface Setup button. The Interface Setup screen is displayed, as shown below:

Figure 4-32
Interface setup window

Interface (APU)

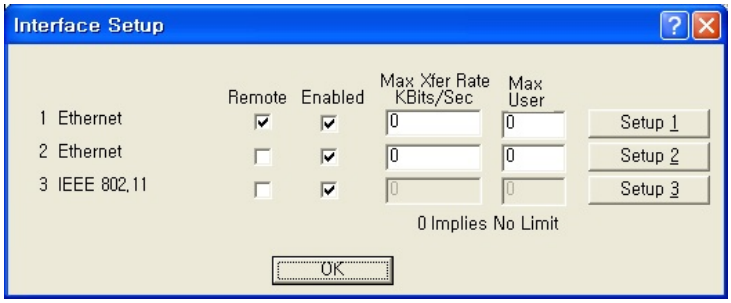

Interface (CSU)

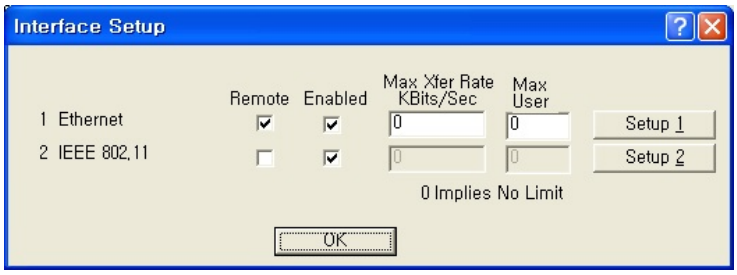

The following rules apply for setting up network interfaces:

- You do not need to set up the Ethernet Interface.
- If you have an 802.11b radio card, click the Setup 2 button to set up the 802.11b interface.

Remote Checkbox -- Select this checkbox if all traffic coming in on this interface is to be viewed as remote traffic for firewall, bridging, filtering, and routing purposes. If this checkbox is not selected, then all traffic on this interface will be considered local traffic. Note that the “Remote” designation is significant only for the Security filters, and does not imply physical location. The security filters will pass (permit) or drop (deny) packets of particular types from being forwarded between interfaces designated as “Local” (unchecked) and those designated as “Remote”.

Note: At least one enabled interface must be a remote interface.

Enabled -- Select this checkbox if this interface should be enabled. If this box is not selected, then the base station will disable the interface and it will not be used, and the interface itself will be "down" from an administrative standpoint.

Note: At least one enabled interface must be a remote interface.

Maximum Transfer Rate (Kbits/sec) -- The maximum transfer rate is the number of bits that can be used for sending and receiving packets. If you wish to limit the maximum data transfer rate for a particular interface, enter the maximum number of kilobits per second that can be transmitted from and to the base station. This helps to reduce the risk of over-powering remote sites and to limit the bandwidth used by a particular base station.

Note: The transfer rate represents the total transfer rate for both sending and receiving packets. For example, if you set the transfer rate to 10,000 Kbits (10 Mbits) per second, then 10 Mbits represents the maximum rate available for both sending and receiving packets. Therefore, if you use 7 Mbits per second in sending the packets, then only 3 Mbits per second are available for receiving packets.

Setup 1, 2, 3 -- The Setup 1, 2 buttons are used to define the available interfaces. In the screenshot shown above, clicking Setup 1 will display the Ethernet Setup screen, clicking Setup 2 will display the 802.11b Setup screen. Each of the Interface Setup screens is explained in more detail below.

Set up Ethernet

Clicking the Setup 1 button on the Interface Setup screen displays the Ethernet Setup screen.

Figure 4-33
Ethernet Setup window

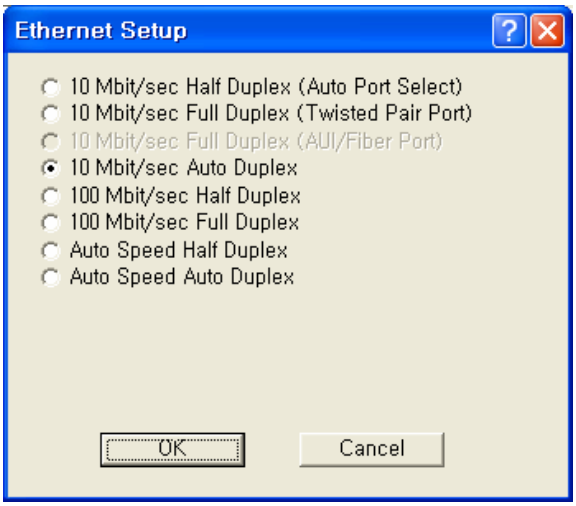

The Secure Data Mode station will automatically set up the Ethernet interface to use the type of medium that has been connected to the unit. By default, the Ethernet connection is set at 10 Mbit/sec for both half duplex and full duplex. Therefore, you do not need to configure special settings for the Ethernet hardware interface. If you wish to customize the Ethernet settings, you can change the settings listed below. However, you do not need to change any settings for your hardware device to be functional.

- The Secure Data Mode Station supports both Ethernet IEEE 802.3 and DIX Ethernet frame types.
- Protocols are set in the Interface Setup window of the Setup Tab.

Note: Do not change the default setup “10Mbit/sec Auto Duplex” in this setup window without consulting the manufacturer.

Ethernet Type -- The Ethernet type options provide a variety of Ethernet settings. The default value for Ethernet type will vary, depending on your hardware device. Only the settings that are enabled on your screen are supported by your particular hardware device. If your switch or Ethernet card supports different speeds, you may want to change the speed setting.

Set Up 802.11b

Clicking the Setup 2 button on the Interface Setup screen displays the 802.11b Setup screen. The 802.11b Setup screen is used to set up the interface to your 802.11b network devices.

Figure 4-34
802.11 Radio Interface Setup window (APU Secure Data Mode)

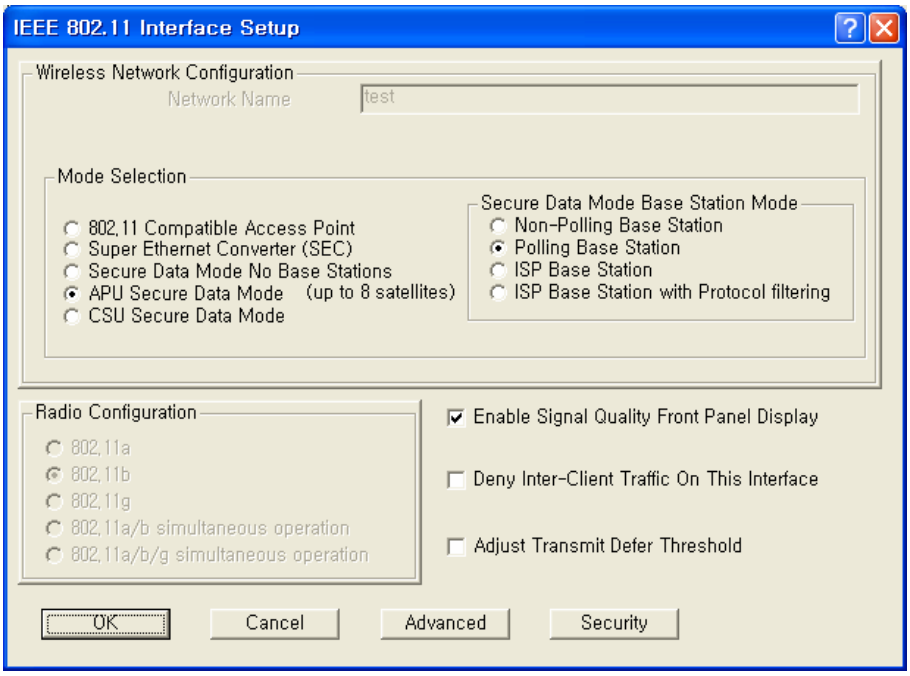

Figure 4-35
802.11 Radio Interface Setup window (APU Wi-Fi Hotspot Mode)

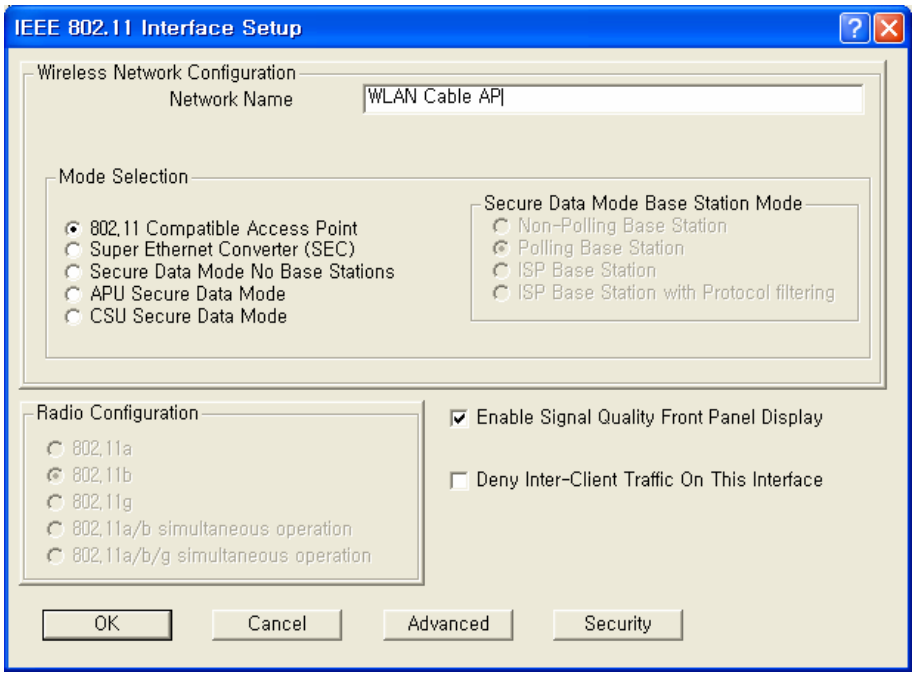

Figure 4-36
802.11 Radio Interface Setup window (CSU)

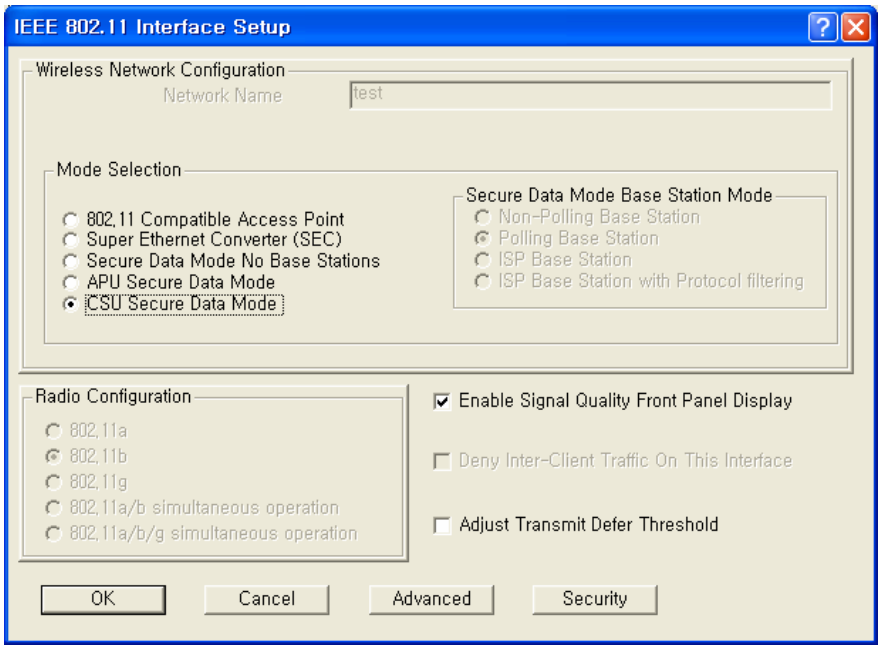

802.11b Network Name-- The 802.11b Network Name is used in standard IEEE 802.11b networks to distinguish stations in your 802.11b network from stations that belong to a neighboring 802.11 network. The value used for the radio interface on this station should be the same for all wireless stations in the 802.11b network. Only stations configured with the proper 802.11b Network Name will be able to connect to the 802.11b station's radio interface.
The Network Name can be any alphanumeric string in the range of "a" to "z," "A" to "Z" and "0" to "9," and can contain from 1 to 32 characters.

If you wish to allow access to the wireless network to be open to all wireless stations, the Network Name should be set to ANY.

Note: The Network Name is used only when the 802.11b radio interface (for example, Orinoco) is set to run in IEEE 802.11 Access Point Mode.

802.11 Compatible Access Point-- When this option is selected on the 802.11a or 802.11b Setup screen, the card attached to this interface will act as a standard 802.11a or 802.11b access point.

Use this setting when:

- Connecting to any 802.11 radios acting as mobile units
- Operating this interface for compatibility with other manufacturers' access point hardware

- Communication over the wireless network is light, or is limited primarily to one satellite

Note: When using this mode, you will not be able to connect to multiple Access Points over the same interface.

If you wish to support a LAN (either wired or wireless) connected to the far side of a remote 802.11 device, you must use a Secure Data Mode Network setup by choosing one of the Secure Data Mode Station modes (see Related Topics for more information).

The IEEE 802.11b Access Point mode is useful primarily for indoor wireless LAN's that have no hidden nodes. For wireless network infrastructure connections you should use one of the Secure Data Mode Station types.

Super Ethernet Converter-- When this option is selected, the card attached to this interface will act as a Mobile Router.

You must also uncheck the Enable Bridging checkbox in General Setup (of the Mobile Router). An Access Point acting as an IEEE Compatible Mobile Router will allow only IP traffic to be transmitted between the Remote IP LAN and the Secure Data Mode Network. The remote LAN must be using IP in order to connect to the IEEE network, but can use additional protocols as well.

In order to bridge Ethernet traffic over the wireless network between remote LANs, you must select one of the Secure Data Mode station types.

Secure Data Mode No Base Stations-- Select this option to set your 802.11b device's radio card on this interface to run as a Secure Data Mode Network without a Secure Data Mode Base Station (i.e. peer-to-peer).

Use this setting only in the rare instance when all Secure Data Mode stations are able to "see" each other (i.e., there are no hidden nodes).

When all connected Secure Data Mode Stations are not able to "'see" one another, this setting should not be used. In that case, you should set one of your Secure Data Mode Station stations to Secure Data Mode Base Station, and the others to Remote (Satellite) Secure Data Mode Stations.

APU Secure Data Mode-- Selecting this option sets the Secure Data Mode Station to run as a Secure Data Mode Base Station over the 802.11b device's radio interface. Every system that needs to connect to the wireless network must be able to connect to the Secure Data Mode Base Station.

When you select this Base Station type, you must select one of the Protocol Filtering Modes. The Protocol Filtering Mode determines how the base will interact with the satellite (slave) stations. Is it recommended that you use the Enable Filters between Slaves mode.

The possible base station modes are as follows:

Non-Polling Base Station

The non-polling Secure Data Mode Base Station Mode is provided mostly for compatibility with older Secure Data Mode Networks, but may give increased performance over other (polling) Secure Data Mode Base Station modes in a lightly loaded network, or in a network with only a few satellites.

Setting a base station to non-polling mode may increase performance in the rare case where all satellites can hear one another (i.e. there are no hidden nodes), or when there is sporadic network use. In an environment where most network traffic is with one satellite, and other satellites rarely transmit data, this setting may also increase performance. However, it is highly recommended that you select one of the polling modes.

Selecting this Secure Data Mode Base Station Mode takes full advantage of the features of a Secure Data Mode Network.

Polling Base Station

Selecting this Secure Data Mode Base Station Mode sets the Secure Data Mode Station to run as a Secure Data Mode Base Station which performs a highly optimized Nortel Networks-proprietary polling of the satellite stations for data. In the Non-Polling Base Station mode, all wireless stations must be able to 'hear' each others' traffic, or performance may degrade considerably (the hidden node problem). In polling mode, the Base Station will poll each station for data, and also offer the opportunity for 'free-for-all' sending of data at set intervals.

In conjunction with the standard features of the Secure Data Mode Network, this Secure Data Mode Base Station Mode offers a significant performance increase over other wireless protocols when the network is under a heavy load.

ISP Base Station

Selecting this Secure Mode Base Station sets the Secure Mode Station to run as a base station for connections to Microsoft Windows PC Clients. This mode takes full advantage of the features of a Secure Mode Network and allows Windows clients to connect directly to the base station, eliminating the need for an Ethernet connection to a second Secure Mode Station running as a Remote Secure Mode Station.

The following Windows clients are supported:

- Windows 95a (with the Winsock 2 update)
- Windows 95b
- Windows 98
- Windows NT 4.0
- Windows XP

To filter Ethernet protocols that are transferred between the wireless stations (for example, to disable the Windows Network Neighborhood), select ISP Base Station with Protocol Filtering. Filters set in Bridge Setup... are not applied to wireless-only traffic in the non-filtering ISP Secure Data Mode Base Station Mode.

We strongly recommend that you set your Secure Data Mode Base Station to ISP Base Station with Protocol Filtering mode when connecting Windows PC Client satellites.

ISP Base Station with Protocol Filtering

Selecting this Secure Data Mode Base Station Mode gives you the same functionality of the ISP Base Station mode, with an added filtering function that applies the bridge filters set in Bridge Setup to traffic sent over the wireless network as well.

With the non-filtering ISP Secure Data Mode Base Station Mode, all traffic between two wireless stations is permitted. Bridge filters do not apply to wireless-only traffic in the non-filtering ISP Secure Data Mode Base Station Mode.
When using the ISP Base Station with the Protocol Filtering setting, you can set the bridge filters so that each wireless machine (or LAN behind another connected Secure Data Mode Station) is 'hidden' from all other machines or LAN's connected to the Secure Data Mode Network. Properly setting up Protocol Filtering will disable the Windows 'Network Neighborhood' from seeing other machines connected on the wireless network.

If you do not deny IP and IP-ARP packet types in Protocol Filtering, wireless machines are still able to connect to each other via IP packets, including TCP and UDP. Permitting only IP traffic over the wireless network will allow your wireless clients to interact as if they were connected to the Internet, but not together on a private network. For added security, the firewall features of the bridge can be used to deny certain types of IP packets from flowing between the wireless stations.

We strongly recommend that you select ISP Base Station with Protocol Filtering when the Secure Data Mode Base Station will service satellites running the PC Client.

CSU Secure Data Mode-- Selecting this option in IEEE 802.11b sets the Secure Data Mode Station to Connect to an APU Secure Data Mode Station over this 802.11b device's radio interface.

To properly use this setting, you must be sure that the following items match the APU Secure Data Mode Station Settings:

- Network ID(NWID)
- System Access Pass phrase
- Frequency Channel

Enable Signal Quality Front Panel Display-- On units that have a front panel display that is capable of displaying the signal quality, selecting this checkbox will enable the signal quality display.

Deny Inter-Client Traffic on this Interface-- Select this checkbox if you wish to prevent wireless stations from sending packets to each other directly. Usually, the AP will repeat station-to-station traffic and will not send it to the bridge and firewall filters. This is because bridging routines historically works between physical interfaces only.

An Ethernet packet sent between two Ethernet hosts on the same Ethernet subnet will automatically be seen by the destination host. With wireless, the packet must be repeated by the AP. This turns off the AP's packet repeating code.

Secure Data Mode Advanced Setup

Clicking the Advanced Button on the 802.11b Setup screen displays the 802.11b Advanced Setup screen, which allows you to configure more options related to the setup of your 802.11b network device.

The appearance of the 802.11b Setup screen varies depending on which options are set on the 802.11b Setup screen. The 802.11b Advanced Setup screen for a Secure Data Mode Base Station is shown below.

Figure 4-37
Secure Data Mode Advanced Setup window

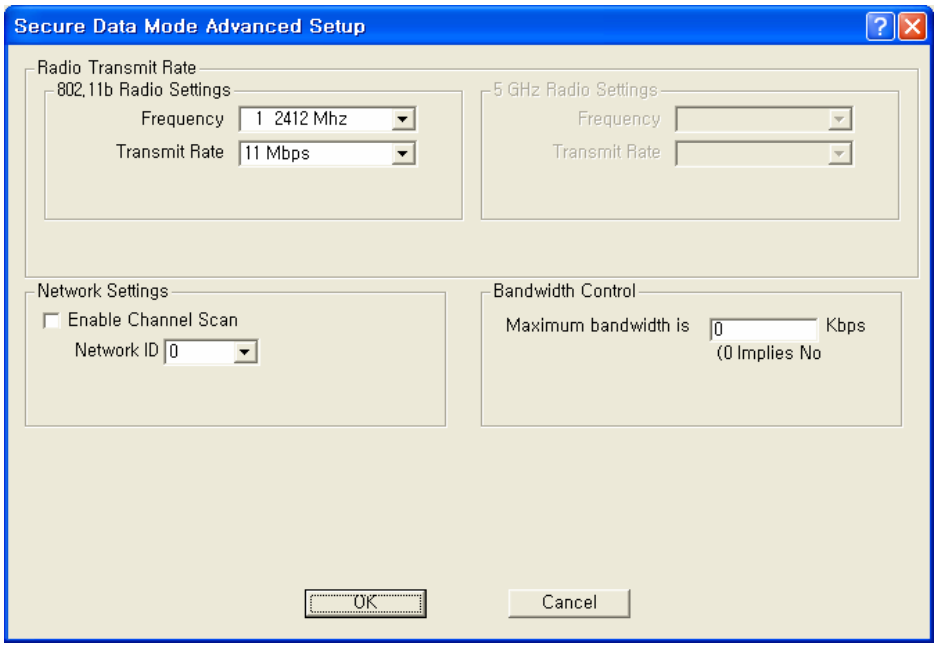

The 802.11b Secure Data Mode Base Station Advanced Setup screen is used to set up advanced features for an 802.11b Secure Data Mode base station.

Network ID-- Enter the Secure Data Mode network ID number (0-15) used to differentiate between multiple Secure Data Mode stations using the same System Access Pass Phrase. This is used to allow a Secure Data Mode satellite to specify the Base Station it wants to connect to if two base stations can be seen by the same satellite. Generally, this value should be the same as the Channel Number.

Radio Transmit Rate-- Select the radio bit rate used to transmit. Your choices are:

- Auto-select (IEEE 802.11 only)
- Low (1 Mbps)
- Standard (2 Mbps)
- Medium (5.5 Mbps)
- High (11 Mbps)

A lower signal will increase the noise. In essence, the poorer the signal-to-noise ratio, the lower this rate should be set.

Note: The transmit rate affects only the transmissions made by this station.

802.11b Frequency Setup-- Clicking the Frequency button on the 802.11b Setup screen displays the 802.11b Frequency Setup screen, which allows you to set the Frequency Channel for your 802.11b radio card.

The 802.11b Frequency Setup screen is used to change the channel and frequency for one of the remote devices on your network. Note that this screen is only accessible if you have identified remote devices in your network. If all devices are in your local network, then the Frequency Setup screen is unavailable.

Channel/Frequency-- Select the channel and frequency for the remote device from the drop-down list. See Frequency Channels for a more detailed explanation of the frequency channels.

Note: The channel/frequency values are usually determined by network administrators. If you set the channel and frequency ensure that there are at least four numerical channels difference between two overlapping cells to avoid interference. For example, channels 1, 6 and 11 don't overlap, but channels 1 and 3 do.

Hotspot Mode Advanced Setup

Clicking the Advanced Button on the 802.11b Setup screen displays the 802.11b Advanced Setup screen, which allows you to configure more options related to the setup of your 802.11b network devices.

The appearance of the 802.11b Setup screen varies depending on which options are set on the 802.11b Setup screen. The 802.11b Advanced Setup screen for a Hotspot Mode Base Station is shown below.

The 802.11b Hotspot Mode Base Station Advanced Setup screen is used to set up advanced features for an 802.11b Secure Data Mode base station.