Laird™

Smart Technology. Delivered.™

Datasheet

60-SIPT series

Version 0.2

PRELIMINARY

Revision History

Version	Date	Notes	Approver
0.1	24 Mar 2017	Initial preliminary version	Jay White
0.2	11 May 2017	Updated some certifications; fixed typos in Channel table; corrected RX sensitivity numbers on 11 AC (MCS9;HT80); Descript PDn and PMU_EN function	Andrew Chen

PRELIMINARY

© Copyright 2017 Laird. All Rights Reserved

CONTENTS

1 Scope 4
2 Introduction 4
2.1 General Description 4
3 60-SIPT Series Features Summary 5
4 Specifications 6
5 WLAN Functional Description 11
5.1 Overview 11
6 Bluetooth Functional Description 14
7 Block Diagram 15
8 Electrical Characteristics 15
8.1 Absolute Maximum Ratings 15
8.2 Recommended Operating Conditions 16
8.3 DC Electrical Characteristics 16
8.4 WLAN Radio Receiver Characteristics 17
8.5 WLAN Transmitter Characteristics 18
9 Bluetooth Radio Characteristics 19
10 Host Interface Specifications 22
10.1 SDIO Specifications 22
10.2 PCI Express Specifications 26
10.3 USB Specifications 30
10.4 PCM Interface Specifications 33
11 Pin Definitions 34
12 Host Configuration Options 37
13 Mechanical Specifications 37
14 RF Layout Design Guidelines 39
15 Recommended Storage, Handling, Baking, and Reflow Profile 39
15.1 Required Storage Conditions 39
15.2 Baking Conditions 40
15.3 Surface Mount Conditions 41
16 Regulatory 43
16.1 Certified Antennas 43
17 FCC and IC Regulatory 43
17.1 FCC 44
17.2 Industry Canada 45
18 European Union Regulatory 48
19 Ordering Information 49
19.1 General Comments 49
19.1.1 Labeling Requirements 50

PRELIMINARY

© Copyright 2017 Laird. All Rights Reserved

1 SCOPE

This document describes key hardware aspects of the Laird 60-SIPT series system-in-package (SiP) modules providing either SDIO, USB2.0, or PCIe bus interface for WLAN connection and UART/PCM, SDIO/PCM, USB2.0/PCM for Bluetooth® connection. This document is intended to assist device manufacturers and related parties with the integration of this radio into their host devices. Data in this document is drawn from several sources and includes information found in the Marvell 88W8997/88PG823 data sheets issued in April 2016, along with other documents provided from Marvell.

Note that the information in this document is subject to change. Please contact Laird to obtain the most recent version of this document.

2 INTRODUCTION

2.1 General Description

The 60-SIPT series SiP modules are an integrated, small form factor 2x2 MIMO 802.11 a/b/g/n/ac WLAN plus *Bluetooth* 4.2 dual mode device that is optimized for low-power mobile devices. The integration of all WLAN and *Bluetooth* functionality in a single package supports low cost and simple implementation along with flexibility for platform-specific customization.

This device is pre-calibrated and integrates the complete transmit/receive RF paths including band pass filter, diplexer, switches, reference crystal oscillator, and power manage units (PMU).

The 60-SIPT series device supports IEEE 802.11 ac (wave 2) 2X2 receive multi-user MIMO (MU-MIMO) spatial stream multiplexing with data rates up to MCS9 (866.7 Mbps). It also supports Bluetooth 2.1 + EDR and Bluetooth 4.2 (Bluetooth Low Energy or BLE). Internal Wi-Fi and BT coexistence scheme provides optimized throughput when Wi-Fi and BT working simultaneously. The device's low power consumption radio architecture and power manage unit (PMU) proprietary power save technologies allow for extended battery life.

In addition, its dual 802.11 and Bluetooth radio includes full digital MAC and baseband engines that handle all 802.11 CCK/OFDM® 2.4/5GHz, and Bluetooth basic rate and EDR baseband and protocol processing.

Dual embedded low-power CPU cores minimize host loading and maximize flexibility to support customer-specific use cases.

The 60-SIPT series SiP modules include two product SKUs which is have different supported software features. Please check Laird Sales/FAE for further information. Order information is listed in Table 1.

Table 1: Product ordering information

Order Model	Description
SU60-SIPT	802.11ac + BT4.2 60 Series hardware combined with Summit Series Enterprise software
ST60-SIPT	802.11ac + BT4.2 60 Series hardware combined with Sterling Series Professional software

PRELIMINARY

© Copyright 2017 Laird. All Rights Reserved

3 60-SIPT Series Features Summary

The Laird 60-SIPT series device features are described in Table 2.

Table 2: 60-SIPT series features

Feature	Description
Radio Front End	Integrates the complete transmit/receive RF paths including band pass filter, diplexer, switches, reference crystal oscillator, and power manage unit (PMU). Supports 20/40/80MHz channel bandwidth. WLAN/Bluetooth share one antenna.

The *Bluetooth*® word mark and logos are registered trademarks owned by Bluetooth SIG, Inc. Any use of such marks by Laird is under license. Other trademarks and trade names are those of their respective owners.

Coexistence	Coexistence arbitration for WLAN, Bluetooth, and LTE operation
Power Management	Dynamic Voltage Scaling (DVS) and Adaptive Voltage Scaling (AVS) features support the latest Marvell SoC and Processor power control scheme.
Pre-Calibration	RF system tested and calibrated in production
Sleep Clock	An external sleep clock of 32.768 KHz is required during power save mode
Host Interface	▪ SDIO 3.0 (4-bit and 1-bit), SDR 12/25/50 mode (up to 100 MHz), USB2.0 or PCIe for WLAN ▪ SDIO 3.0, USB 2.0, HS-UART for Bluetooth HCI (compatible with any upper layer Bluetooth stack) ▪ PCM digital audio interface for Bluetooth audio application

Strap Value CONFIG_HOST [2-0]	WLAN	Bluetooth/BLE	ROM Notes
000	SDIO	UART	-
001	SDIO	SDIO	-
010	PCIe	USB 2.0	Initial USB 2.0 PHY and COM PHY PCIe portion
011	PCIe	UART	Initial only COM PHY PCIe portion
100	USB 2.0	UART	Initial COM PHY USB 2.0
101	USB 2.0	USB 2.0	Initial only USB 2.0 PHY

Reference Frequency	▪ Incorporates a 40 MHz reference frequency source in package ▪ An external sleep clock is recommended for minimal current consumption. If no sleep clock input is provided, an internal sleep clock (derived from reference clock) is used. An approximate 50 uA current increase on the 3.3V rail.
Advanced WLAN	▪ A-MPDU RX (de-aggregation) and TX (aggregation) supports 802.11ac single-MPDU A-MPDU. ▪ Multi-BSS/Station ▪ Transmit rate adaption, transmit power control ▪ Modulation and coding scheme (MCS): 802.11ac—MCS0-9 Nsts=1 and 2. 802.11n—MCS0-15 ▪ Dynamic frequency selection (radar detection) DFS ▪ 20/40/80 MHz channel bandwidths support ▪ On-chip gain selectable LNA with optimized noise figure and power consumption ▪ Internal PA with optimized gain distribution for linearity and noise performance ▪ Support wide variety of WLAN encryption: TKIP/WEP/AES

© Copyright 2017 Laird. All Rights Reserved

Feature	Description
Advanced Bluetooth	▪ Bluetooth 4.2 (BDR/EDR/LE), Bluetooth class 1 ▪ Support data rate: 1 Mbps(GFSK), 2 Mbps (π /4-DQPSK), 3 Mbps (8-DPSK) ▪ Digital audio interface with PCM/TDM interface for voice application ▪ Adaptive Frequency Hopping (AFH) using Package Error Rate (PER) ▪ Standard SDIO or UART HCI transport layer ▪ WLAN/Bluetooth coexistence protocol support ▪ Shared LNA with WLAN/Bluetooth ▪ Encryption (AES) support

4 SPECIFICATIONS

Table 3: Specifications

Feature	Description
Physical Interface	84-pin LGA package (including 16 thermal ground pad under the package)
Wi-Fi Interface	1-bit or 4-bit Secure Digital I/O; PCIe v3.0 Gen1/Gen2 (2.5/5 Gbps); USB 2.0
Bluetooth/BLE Interface	Host Controller Interface (HCI) using high speed UART, SDIO, USB 2.0

Strap Value CONFIG_HOST [2-0]	WLAN	Bluetooth/ BLE	ROM Notes
000	SDIO	UART	-
001	SDIO	SDIO	-
010	PCIe	USB 2.0	Initial USB 2.0 PHY and COM PHY PCIe portion
011	PCIe	UART	Initial only COM PHY PCIe portion
100	USB 2.0	UART	Initial COM PHY USB 2.0
101	USB 2.0	USB 2.0	Initial only USB 2.0 PHY

Main Chip	Marvell 88W8997 (WLAN/BT); Marvell 88PG823 (PMU)
Input Voltage Requirements	DC 3.3 V ±10%
I/O Signalling Voltage	DC 3.3 V ± 10% or DC 1.8 V ± 10%
Operating Temperature	-30° to 85°C (-22° to 185°F)
Operating Humidity	10 to 90% (non-condensing)
Storage Temperature	-40° to 85°C (-40° to 185°F)
Storage Humidity	10 to 90% (non-condensing)
Maximum Electrostatic Discharge	Conductive 4KV; Air coupled 8KV follow EN61000-4-2
Size	13 mm (length) x 14 mm (width) x 1.87 mm (thickness)
Weight	TBD g
Wi-Fi Media	Direct Sequence-Spread Spectrum (DSSS) Complementary Code Keying (CCK) Orthogonal Frequency Divisional Multiplexing (OFDM)
Bluetooth Media	Frequency Hopping Spread Spectrum (FHSS)
Wi-Fi Media Access Protocol	Carrier sense multiple access with collision avoidance (CSMA/CA) A-MPDU Rx (De-aggregation) and Tx (aggregation) (802.11ac single-MPDU A-MPDU)
Network Architecture Types	Infrastructure and ad-hoc

© Copyright 2017 Laird. All Rights Reserved

Feature	Description
Wi-Fi Standards	IEEE 802.11a, 802.11b, 802.11d, 802.11e, 802.11g, 802.11h, 802.11i, 802.11n, 802.11r, 802.11ac, 802.11w, 802.11K, 802.11v
Bluetooth Standards	Bluetooth version 2.1 with Enhanced Data Rate Bluetooth 4.2 (Bluetooth Low Energy or BLE)
Wi-Fi Data Rates Supported	Support 802.11 ac/a/b/g/n 2X2 MIMO. 802.11b (DSSS, CCK) 1, 2, 5.5, 11 Mbps 802.11a/g (OFDM) 6, 9, 12, 18, 24, 36, 48, 54 Mbps 802.11n (OFDM, HT20/HT40, MCS 0-15) 802.11ac (OFDM, HT20, MCS0-8; OFDM HT40/HT80, MCS 0-9)
Modulation Table	BPSK, QPSK, CCK, 16-QAM, 64-QAM, and 256-QAM.

802.11ac 802.11n	HT MCS Index	VHT MCS Index	Spatial Streams	Modulation	Coding	20 MHz		40 MHz		80 MHz	
						No SGI	SGI	No SGI	SGI	No SGI	SGI
	0	0	1	BPSK	1/2	6.5	7.2	13.5	15	29.3	32.5
	1	1	1	QPSK	1/2	13	14.4	27	30	58.5	65
	2	2	1	QPSK	3/4	19.5	21.7	40.5	45	87.8	97.5
	3	3	1	16-QAM	1/2	26	28.9	54	60	117	130
	4	4	1	16-QAM	3/4	39	43.3	81	90	175.5	195
	5	5	1	64-QAM	2/3	52	57.8	108	120	234	260
	6	6	1	64-QAM	3/4	58.5	65	121.5	135	263.3	292.5
	7	7	1	64-QAM	5/6	65	72.2	135	150	292.5	325
		8	1	256-QAM	3/4	78	86.7	162	180	351	390
		9	1	256-QAM	5/6	N/A	N/A	180	200	390	**433.3**
	8	0	2	BPSK	1/2	13	14.4	27	30	58.5	65
	9	1	2	QPSK	1/2	26	28.9	54	60	117	130
	10	2	2	QPSK	3/4	39	43.3	81	90	175.5	195
	11	3	2	16-QAM	1/2	52	57.8	108	120	234	260
	12	4	2	16-QAM	3/4	78	86.7	162	180	351	390
	13	5	2	64-QAM	2/3	104	115.6	216	240	468	520
	14	6	2	64-QAM	3/4	117	130.3	243	270	526.5	585
	15	7	2	64-QAM	5/6	130	144.4	270	300	585	650
		8	2	256-QAM	3/4	156	173.3	324	360	702	180
		9	2	256-QAM	5/6	N/A	N/A	360	400	780	**866.7**

802.11ac/n Spatial Streams	2 (2x2 MIMO)
Bluetooth Data Rates Supported	1, 2, 3 Mbps
Bluetooth Modulation	GFSK@ 1 Mbps Pi/4-DQPSK@ 2 Mbps 8-DPSK@ 3 Mbps
Regulatory Domain Support	FCC (Americas, Parts of Asia, and Middle East) ETSI (Europe, Middle East, Africa, and Parts of Asia) IC (Industry Canada) MIC (Japan) (formerly TELEC) – Option KC (Korea) (formerly KCC) – Option

© Copyright 2017 Laird. All Rights Reserved

Feature	Description
2.4 GHz Frequency Bands	**ETSI:** 2.4 GHz to 2.483 GHz **FCC:** 2.4 GHz to 2.473 GHz **MIC:** 2.4 GHz to 2.495 GHz **KC:** 2.4 GHz to 2.483 GHz
2.4 GHz Operating Channels (Wi-Fi)	**ETSI:** 13 (3 non-overlapping) **FCC:** 11 (3 non-overlapping) **MIC:** 14 (4 non-overlapping) **KC:** 13 (3 non-overlapping)
5 GHz Frequency Bands	**ETSI** 5.15 GHz to 5.35 GHz (Ch 36/40/44/48/52/56/60/64) 5.47 GHz to 5.725 GHz (Ch 100/104/108/112/116/120/124/128/132/136/140/144) **FCC** 5.15 GHz to 5.35 GHz (Ch 36/40/44/48/52/56/60/64) 5.47 GHz to 5.725 GHz (Ch 100/104/108/112/116/120/124/128/132/136/140/144 5.725 GHz to 5.85 GHz (Ch 149/153/157/161/165) **MIC (Japan)** 5.15 GHz to 5.35 GHz (Ch 36/40/44/48/52/56/60/64) 5.47 GHz to 5.725 GHz (Ch 100/104/108/112/116/120/124/128/132/136/140/144) **KC** 5.15 GHz to 5.35 GHz (Ch 36/40/44/48/52/56/60/64) 5.47 GHz to 5.725 GHz (Ch 100/104/108/112/116/120/124) 5.725 GHz to 5.825 GHz (Ch 149/153/157/161)
5 GHz Operating Channels (Wi-Fi)	ETSI: 19 non-overlapping; FCC: 24 non-overlapping MIC: (Japan): 19 non-overlapping; KC: 19 non-overlapping
Transmit Power ***Note:*** *Transmit power on each channel varies per individual country regulations. All values are nominal with +/-2 dBm tolerance at room temperature.* *Tolerance could be up to +/-2.5 dBm across operating temperature.* ***Note:*** *HT20 – 20 MHz-wide channels* *HT40 – 40 MHz-wide channels* *HT80 – 80 MHz-wide channels*	**802.11a** 6 Mbps — 18 dBm (63 mW) 54 Mbps — 16 dBm (40 mW) **802.11b** 1 Mbps — 18 dBm (63 mW) 11 Mbps — 18 dBm (63 mW) **802.11g** 6 Mbps — 18 dBm (63 mW) 54 Mbps — 16 dBm (40 mW) **802.11n (2.4/5 GHz)** 6.5 Mbps (MCS0-5/MCS8-13; HT20) — 18 dBm (63 mW) 65 Mbps (MCS6-7/MCS14-15; HT20) — 16 dBm (40 mW) 13.5 Mbps (MCS0-5/MCS8-13; HT40) — 16 dBm (40 mW) 135 Mbps (MCS6-7/MCS14-15; HT40) — 14 dBm (25 mW) **802.11ac (5 GHz)** 6.5/13 Mbps (MCS0-6; Ntst=1,2; HT20) — 18 dBm (63 mW) 78/156 Mbps (MCS7-8; Ntst=1,2; HT20) — 16 dBm (40 mW) 13.5/27 Mbps (MCS0-5; Ntst=1,2; HT40) — 16 dBm (40 mW) 180/360 Mbps (MCS6-8; Ntst=1,2; HT40) — 14 dBm (25 mW) 200/400 Mbps (MCS9; Ntst=1,2; HT40) — 12 dBm (15.8mW) 29.3/58.5 Mbps (MCS0-5; Ntst=1,2; HT80) — 14 dBm (25 mW) 263.3/526.5 Mbps (MCS6-8; Ntst=1,2; HT80) — 12 dBm (15.8 mW) 390/780 Mbps (MCS9; Ntst=1,2; HT80) — 10 dBm (10 mW) **Bluetooth** 1 Mbps (1DH5) — 10 dBm (12.5 mW)

© Copyright 2017 Laird. All Rights Reserved

Feature	Description	
	2 Mbps	7 dBm (6.3 mW)
	3 Mbps	7 dBm (6.3 mW)
	BLE (1 Mbps)	7 dBm (6.3 mW)
Typical Receiver Sensitivity (PER <= 10%) *Note: All values nominal, +/-3 dBm. Sensitivity on CH13 (WLAN)/CH78 (BT) will decade up to 4-6dB.*	**802.11a:**	
	6 Mbps	-89 dBm
	54 Mbps	-74 dBm
	802.11b:	
	1 Mbps	-95 dBm
	11 Mbps	-90 dBm (PER<8%)
	802.11g:	
	6 Mbps	-91 dBm
	54 Mbps	-75 dBm
	802.11n (2.4 GHz)	
	6.5 Mbps (MCS0; HT20)	-91 dBm
	65 Mbps (MCS7; HT20)	-73 dBm
	13.5 Mbps (MCS0; HT40)	-85 dBm
	135 Mbps (MCS7; HT40)	-70 dBm
	802.11n (5 GHz)	
	6.5 Mbps (MCS0; HT20)	-89 dBm
	65 Mbps (MCS7; HT20)	-70 dBm
	13.5Mbps (MCS0; HT40)	-86 dBm
	135Mbps (MCS7; HT40)	-69 dBm
	802.11ac (5 GHz)	
	6.5 Mbps (MCS0; HT20)	-89 dBm
	78 Mbps (MCS8; HT20)	-67 dBm
	13.5 Mbps (MCS0; HT40)	-86 dBm
	180 Mbps (MCS9; HT40)	-63 dBm
	29.3 Mbps (MCS0; HT80)	-81 dBm
	390/780 Mbps (MCS9; HT80)	-55 dBm
	Bluetooth:	
	1 Mbps (1DH5)	-95 dBm
	2Mbps (2DH5)	-94 dBm
	3 Mbps (3DH5)	-88 dBm
	BLE	-95 dBm
Operating Systems Supported	Linux 3.x to 4.9.x kernel. Android 5.0-5.1.1 (Lollipop) Nov. 2014 supported. Android 6.0-6.01 (Marshmallow) Oct 2015 supported Android 7.0-7.1.1 (Nougat) Aug. 2016 supported	

PRELIMINARY

© Copyright 2017 Laird. All Rights Reserved

Feature	Description
Security	**Standards** Wireless Equivalent Privacy (WEP) Wi-Fi Protected Access (WPA) IEEE 802.11i (WPA2) **Encryption** Wireless Equivalent Privacy (WEP, RC4 Algorithm) Temporal Key Integrity Protocol (TKIP, RC4 Algorithm) Advanced Encryption Standard (AES, Rijndael Algorithm) Encryption Key Provisioning Static (40-bit and 128-bit lengths) Pre-Shared (PSK) **Dynamic** 802.1X Extensible Authentication Protocol Types EAP-FAST PEAP-MSCHAPv2 EAP-TLS PEAP-TLS EAP-TTLS LEAP PEAP-GTC
Compliance ***Note:*** *These regulatory certifications are pending.*	**ETSI Regulatory Domain** EN 300 328 EN 301 489-1 EN 301 489-17 EN 301 893 EN 60950-1 2011/65/EU (RoHS) **FCC Regulatory Domain** FCC 15.247 DTS – 802.11b/g (Wi-Fi) – 2.4 GHz FCC 15.407 UNII – 802.11a (Wi-Fi) – 5 GHz FCC 15.247 DSS – BT 2.1 **Industry Canada** RSS-247 – 802.11a/b/g/n (Wi-Fi) – 2.4 GHz, 5.8 GHz, 5.2 GHz, and 5.4 GHz RSS-247 – BT 2.1
Certifications ***Note:*** *These regulatory certifications are pending.*	**Wi-Fi Alliance** 802.11a, 802.11b, 802.11g, 802.11n, 802.11ac WPA Enterprise WPA2 Enterprise *Bluetooth*® SIG Qualification
Warranty	Three Year Warranty

All specifications are subject to change without notice

PRELIMINARY

© Copyright 2017 Laird. All Rights Reserved

5 WLAN Functional Description

5.1 Overview

The 60-SIPT series SiP module is designed based on the Marvell 88W8997 802.11ac/a/b/g/n chipset. It is optimized for high speed, reliable, and low-power embedded applications. It's integrated with dual-band WLAN (2.4/5GHz) and Bluetooth 4.2. Its functionality includes:

- Improved throughput on the link due to frame aggregation, RIFS (reduced inter-frame spacing), and half guard intervals.
- Support for STBC (Space Time Block Codes) and LDPC (Low Density Parity Check) codes.
- Improved 11n performance due to features such as 11n frame aggregation (A-MPDU and A-MSDU) and low-overhead host-assisted buffering (RX A-MSDU and RX A-MPDU). These techniques can improve performance and efficiency of applications involving large bulk data transfers such as file transfers or high-resolution video streaming.
- IEEE 802.11 ac (Wave 2), 2X2 receive Multi-User MIMIO (MU-MIMO) spatial stream multiplexing with data rate up to MCS9 (866.7Mbps).

Additional functionality is listed in the following table (Table 4).

Table 4: WLAN functions

Feature	Description
WLAN MAC	▪ Frame Exchange at the MAC level to deliver data ▪ Received frame filtering and validation (Cyclic Redundancy Check (CRC)) ▪ Generation of MAC header and trailer information (MAC protocol Data Units (MPDUs)) ▪ Fragmentation of data frames (MAC Service Data Units (MSDUs) ▪ Access Mechanism support for fair access to shared wireless medium through (DCF and EDCA) ▪ A-MPDU Aggregation/Deaggregation (support 802.11ac single –MPDU A-MPDU) ▪ 20/40/80 MHz channel Coexistence ▪ RIFS Burst Receive ▪ Management Information Base ▪ Radio Resource Measurement ▪ Quality of Service ▪ Block Acknowledgement ▪ 802.11ac Downlink MU-MIMO (receive) ▪ Dynamic Frequency Selection ▪ Beamforming ▪ TIM Frame TX and RX ▪ Multi-BSS/Station ▪ Transmit Rate Adaptation. ▪ Transmit Power Control

PRELIMINARY

© Copyright 2017 Laird. All Rights Reserved

Feature	Description
WLAN Base Band	▪ 802.11ac 2x2 MU-MIMO (with on-chip Marvell RF radio) ▪ Backward compatibility with legacy 802.11 n/a/b/g technology ▪ WLAN/Bluetooth LNA sharing ▪ PHY rate up to 866.7 Mbps ▪ 20 MHz bandwidth/channel, 40 MHz bandwidth/channel, upper/lower 20 MHz packets in 40 MHz channel, 20 MHz duplicate legacy packets in 40 MHz channel operation. ▪ 80 MHz bandwidth/channel, 4 positions of 20 MHz packets in 80 MHz channel, upper/lower 40 MHz packets in 80 MHz channel, 20 MHz quadruplicate legacy packets in 80 MHz channel mode operation. ▪ Modulation and Coding Scheme (MCS): 802.11ac (MCS0-9. Nsts=1/2); 802.11n (MCS0-15) ▪ Dynamic Frequency Selection (DFS) (Radar detection) – Enhanced radar detection for long and short pulse radar – Enhanced AGC scheme for DFS channel – Japan DFS requirements for W53 and W56 ▪ 802.11 K Radio Resource Measurement. ▪ 802.11ac /802.11n optional MIMO features: 20/40/80 MHz Coexistence with middle-packaged detection (GI detection) for enhanced CCA – One spatial stream STBC reception and transmission – LDPC transmission and reception for 802.11ac and 802.11n – 256 QAM (MCS8-9) modulations supported – Short guard interval – RIFS on receive path for 802.11n packets – 802.11n Greenfield TX/RX ▪ Power Save feature
WLAN Security	▪ WLAN Encryption features supported include: – Temporal Key Integrity Protocol (TKIP)/Wired Equivalent Privacy (WEP) – Advanced Encryption Standard (AES)/Counter-Mode/CBC-MAC Protocol (CCMP) – Advanced Encryption Standard (AES)/Cipher-Based Message Authentication Code (CMAC) – Advanced Encryption Standard (AES)/Galois/Counter Mode Protocol (GCMP) – WLAN Authentication and Private Infrastructure (WPAI)

PRELIMINARY

© Copyright 2017 Laird. All Rights Reserved

Feature	Description
WLAN Channel	Channel frequency supported.

20 MHz				40 MHz		80 MHz	
Channel	Freq. (MHz)	Channel	Freq. (MHz)	Channel	Freq. (MHz)	Channel	Freq. (MHz)
1	2412	36	5180	1-5	2422	42	5210
2	2417	40	5200	2-6	2427	58	5290
3	2422	44	5220	3-7	2432	74	5370
4	2427	48	5240	4-8	2437	90	5410
5	2432	52	5260	5-9	2422	106	5530
6	2437	56	5280	6-10	2447	122	5610
7	2422	60	5300	7-11	2452	138	5690
8	2447	64	5320	36-40	5190	155	5775
9	2452	100	5500	44-48	5230		
10	2457	104	5520	52-56	5270		
11	2462	108	5540	60-64	5310		
12	2467	112	5560	68-72	5350		
13	2472	116	5580	76-80	5390		
		120	5600	84-88	5430		
		124	5620	92-96	5470		
		128	5640	100-104	5510		
		132	5660	108-112	5550		
		136	5680	116-120	5590		
		140	5700	124-128	5630		
		144	5720	132-136	5670		
		149	5745	140-144	5710		
		153	5765	149-153	5755		
		157	5785	157-161	5795		
		161	5805				
		165	5825				

PRELI

© Copyright 2017 Laird. All Rights Reserved

6 Bluetooth Functional Description

The 60-SIPT series includes a fully-integrated Bluetooth baseband/radio. Several features and functions are listed in Table 5.

Table 5: Bluetooth functions

Feature	Description
Bluetooth Interface	▪ Voice interface: – Hardware support for continual PCM data transmission/reception without processor overhead. – Standard PCM clock rates from 64 kHz to 2.048 MHz with multi-slot handshake and synchronization. – A-law, U-law, and linear voice PCM encoding/decoding. ▪ SDIO interface ▪ High-Speed UART interface ▪ USB 2.0
Bluetooth Core functionality	▪ Bluetooth 4.2 ▪ Bluetooth Class 2/Bluetooth class 1 ▪ WLAN and Bluetooth share same LNA and antenna ▪ Digital audio interfaces with PCM/TDM interface for voice application ▪ Baseband and radio BDR and EDR package type: 1 Mbps, 2 Mbps, 3 Mbps ▪ Fully functional Bluetooth baseband: AFH, forward error correction, header error control, access code correction, CRC, encryption bit stream generation, and whitening. ▪ Adaptive Frequency Hopping (AFH) using Packet Error Rate (PER) ▪ Interlaced scan for faster connection setup ▪ Simultaneous active ACL connection setup ▪ Automatic ACL package type selection ▪ Full master and slave piconet support ▪ Scatter net support ▪ SCO/eSCO links with hardware accelerated audio signal processing and hardware supported PPEC algorithm for speech quality improvement ▪ All standard SCO/eSCO voice coding ▪ All standard pairing, authentication, link key, and encryption operations ▪ Encryption (AES) support
Bluetooth Low Energy (BLE) Core functionality	▪ Advertiser, Scanner, Initiator, Master, and Slave roles support (connects to 16 links) ▪ WLAN/Bluetooth Coexistence (BCA) protocol support. ▪ Shared RF with BDR/EDR ▪ Encryption (AES) support. ▪ Intelligent Adaptive Frequency Hopping (AFH) ▪ LE privacy 1.2 ▪ LE Secure Connection. ▪ LE Data Length Extension ▪ LE Advertising Length Extension. ▪ 2Mbps LE ▪ Direction Finding –connectionless Angle of Departure (AoD) ▪ Direction Finding –connectionless Angle of Arrival (AoA)

© Copyright 2017 Laird. All Rights Reserved

7 Block Diagram

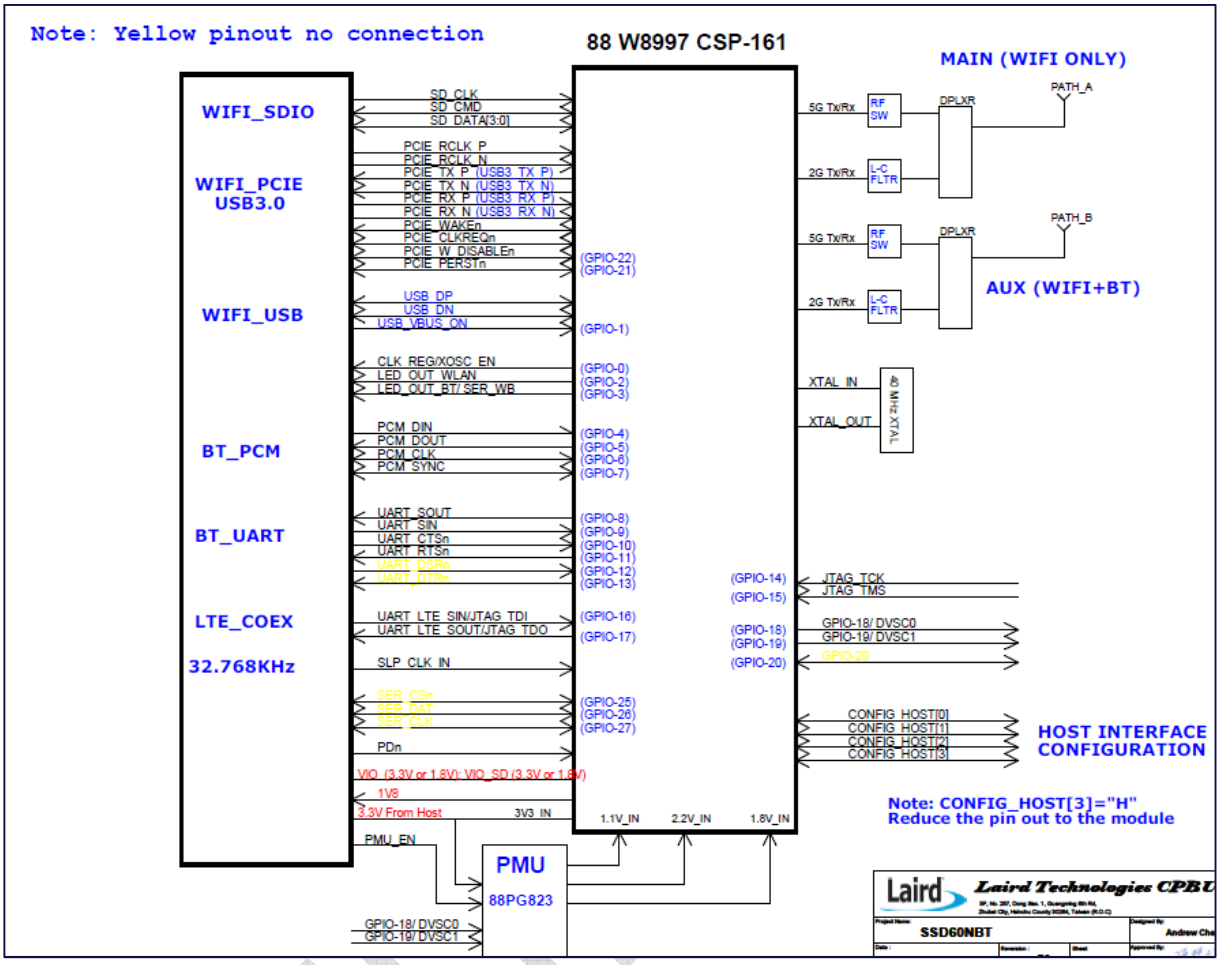

Figure 1: Block diagram

8 Electrical Characteristics

8.1 Absolute Maximum Ratings

Table 6 summarizes the absolute maximum ratings and Table 7 lists the recommended operating conditions for the 60-SIPT Series. Absolute maximum ratings are those values beyond which damage to the device can occur. Functional operation under these conditions, or at any other condition beyond those indicated in the operational sections of this document, is not recommended.

Note: Maximum rating for signals follows the supply domain of the signals.

Table 6: Absolute maximum ratings

Symbol (Domain)	Parameter	Max Rating	Unit
VIO_SD	WLAN host SDIO interface I/O supply (for 1.8V system)	2.2	V
	(for 3.3V system)	4.0	

© Copyright 2017 Laird. All Rights Reserved

Symbol (Domain)	Parameter	Max Rating	Unit
VIO	I/O configuration power supply (for 1.8V system) (for 3.3V system)	2.2 4.0	V
3V3	External 3.3V power supply	4.0	V
Storage	Storage Temperature	-40 to +85	°C
ANT0; ANT1	Maximum RF input (reference to 50-Ω input)	+10	dBm
ESD	Electrostatic discharge tolerance	2000	V

8.2 Recommended Operating Conditions

Table 7: Recommended Operating Conditions

Symbol (Domain)	Parameter	Min	Typ	Max	Unit
VIO_SD	WLAN host interface I/O supply	1.62/2.97	1.8/3.3	1.98/3.63	V
VIO	WLAN and BT GPIO I/O power supply	1.62/2.97	1.8/3.3	1.98/3.63	V
3V3	External 3.3V power supply	2.97	3.30	3.63	V
T-ambient	Ambient temperature	-30	25	85	°C

8.3 DC Electrical Characteristics

Table 8 and Table 9 list the general DC electrical characteristics over recommended operating conditions (unless otherwise specified).

Table 8: General DC electrical characteristics (For 1.8V operation VIO_SD; VIO)

Symbol	Parameter	Conditions	Min	Typ	Max	Unit
VIH	High Level Input Voltage	--	1.26		2.2	V
VIL	Low Level Input Voltage	--	-0.4		0.54	V
VHYS	Input Hysteresis	--	100			mV
VOH	Output high Voltage	--	1.4			V
VOL	Output low Voltage	--			0.4	V

Table 9: General DC electrical characteristics (For 3.3V operation VIO_SD; VIO)

Symbol	Parameter	Conditions	Min	Typ	Max	Unit
VIH	High Level Input Voltage	--	2.4		3.6	V
VIL	Low Level Input Voltage	--	-0.4		0.9	V
VHYS	Input Hysteresis	--	100			mV
VOH	Output high Voltage	--	2.9			V
VOL	Output low Voltage	--			0.4	V

Table 10: DC electrical characteristics for 1.8V or 3.3V operation on special pads (PCIE_WAKEn, PCIE_CLKREQn)

Symbol	Parameter	Conditions	Min	Typ	Max	Unit
VIH	High Level Input Voltage	--	1.4		3.6	V
VIL	Low Level Input Voltage	--	-0.4		0.8	V

PRELIMINARY

© Copyright 2017 Laird. All Rights Reserved

Symbol	Parameter	Conditions	Min	Typ	Max	Unit
VHYS	Input Hysteresis	--	150			mV
VOL	Output low Voltage	--			0.4	V

8.4 WLAN Radio Receiver Characteristics

Table 11 and Table 12 summarize the WLAN 60-SIPT series receiver characteristics.

Table 11: WLAN receiver characteristics for 2.4 GHz signal chain operation

Symbol	Parameter	Conditions	Min	Typ	Max	Unit
Frx	Receive input frequency range		2.412		2.484	GHz
Srf	Sensitivity					
	CCK, 1 Mbps	See Note[1]		-95		dBm
	CCK, 11 Mbps			-90		
	OFDM, 6 Mbps			-91		
	OFDM, 54 Mbps			-75		
	HT20, MCS0			-91		
	HT20, MCS7			-73		
Radj	Adjacent channel rejection					
	OFDM, 6 Mbps	See Note[1]		TBD		dB
	OFDM, 54 Mbps			TBD		
	HT20, MCS0			TBD		
	HT20, MCS7			TBD		

Table 12: WLAN Receiver Characteristics for 5 GHz Dual Chain Operation

Symbol	Parameter	Conditions	Min	Typ	Max	Unit
Frx	Receive input frequency range		5.15		5.825	GHz
Srf	Sensitivity					
	OFDM, 6 Mbps	See Note[1]		-89		dBm
	OFDM, 54 Mbps			-74		
	HT20, MCS0			-89		
	HT20, MCS7			-70		
	HT40, MCS0			-86		
	HT40, MCS7			-69		
Radj	Adjacent channel rejection					
	OFDM, 6 Mbps	See Note[1]		TBD		dB
	OFDM, 54 Mbps			TBD		
	HT20, MCS0			TBD		
	HT20, MCS7			TBD		

Note[1]: Performance data are measured under single chain operation.

© Copyright 2017 Laird. All Rights Reserved

8.5 WLAN Transmitter Characteristics

Table 13: WLAN transmitter characteristics for 2.4 GHz per chain operation

Symbol	Parameter	Conditions	Min	Typ	Max	Unit
Ftx	Transmit output frequency range		2.412		2.484	GHz
Pout	Output power	See Note[7]				
	11b mask compliant	1-11Mbps		18		dBm
	11g mask compliant	6-36Mbps		18		
	11g EVM compliant	48-54Mbps		16		
	11n HT20 mask compliant	MCS0-5/MCS8-13		18		
	11n HT20 EVM compliant	MCS6-7/MCS14-15		16		
	11n HT40 mask compliant	MCS0-5/MCS8-13		16		
	11n HT40 EVM compliant	MCS6-7/MCS14-15		14		
ATx	Transmit power accuracy at 25 ℃	-	-2.0	-	+2.0	dB

Freq.	Mode/Rate (Mbps)	Output Power Per Chain (dBm)	Typical Current Consumption Single Chain (mA)[8]	Max. Current Consumption Single Chain (mA)[8]
2412MHz	1 Mbps	18dBm	340	620
	54 Mbps	16dBm	280	500
	HT20 MCS7	16dBm	280	510
2422MHz	1 Mbps	18dBm	340	620
	54 Mbps	16dBm	280	500
	HT20 MCS7	16dBm	280	510
2472MHz	1 Mbps	18dBm	340	620
	54 Mbps	16dBm	280	500
	HT20 MCS7	16dBm	280	510

Table 14: WLAN transmitter characteristics for 5 GHz per chain operation

Symbol	Parameter	Conditions	Min	Typ	Max	Unit
Ftx	Transmit output frequency range		5.15		5.925	GHz
Pout	Output power	See Note[3]				
	11a mask compliant	6-36Mbps		18		dBm
	11a EVM compliant	48-54Mbps		16		
	11n HT20 mask compliant	MCS0-5/MCS8-13		18		
	11n HT20 EVM compliant	MCS6-7/MCS14-15		16		
	11n HT40 mask compliant	MCS0-5/MCS8-13		16		
	11n HT40 EVM compliant	MCS6-7/MCS14-15		14		
	11ac HT20 mask compliant	MCS0-6 (Ntst=1,2)		18		
	11ac HT20 EVM compliant	MCS7-8(Ntst=1,2)		16		
	11ac HT40 mask compliant	MCS0-5 (Ntst=1,2)		16		
	11ac HT40 EVM compliant	MCS6-8(Ntst=1,2)		14		
	11ac HT40 EVM compliant	MCS9(Ntst=1,2)		12		

© Copyright 2017 Laird. All Rights Reserved

Symbol	Parameter	Conditions	Min	Typ	Max	Unit
	11ac HT80 mask compliant	MCS0-5 (Ntst=1,2)		14		
	11ac HT80 EVM compliant	MCS6-8(Ntst=1,2)		12		
	11ac HT80 EVM compliant	MCS9(Ntst=1,2)		10		
ATx	Transmit power accuracy at 25 ℃	-	-2.0	-	+2.0	dB

Table 15: WLAN current consumption on 5 GHz

Freq.	Mode/Rate [Mbps]	Output Power Per Chain [dBm]	Typical Current Consumption Single Chain (mA)	Typical Current Consumption Dual Chain (mA)
5180 MHz	6 Mbps	18 dBm	400	710
	54 Mbps	16 dBm	330	610
	HT20 MCS0	18 dBm	400	720
	HT20 MCS7	16 dBm	360	620
5190 MHz	HT40 MCS7	14 dBm	320	550
5500 MHz	6 Mbps	18 dBm	380	680
	54 Mbps	16 dBm	330	600
	HT20 MCS0	18 dBm	370	690
	HT20 MCS7	16 dBm	320	600
5510 MHz	HT40 MCS7	14 dBm	300	530
5825 MHz	6 Mbps	18 dBm	380	690
	54 Mbps	16 dBm	310	600
	HT20 MCS0	18 dBm	360	710
	HT20 MCS7	16 dBm	340	550
5795 MHz	HT40 MCS7	14 dBm	300	530

Note: Final TX power values on each channel are limited by the regulatory certification test limit.

9 Bluetooth Radio Characteristics

Table 16 through Table 17 describe the basic rate transmitter performance, enhanced data transmitter performance, basic rate receiver performance, enhanced rate receiver performance, and current consumption conditions at 25°C.

Table 16: Basic rate transmitter performance temperature at 25°C (3.3V)

Test Parameter	Min	Typ	Max	BT Spec.	Unit
Maximum RF Output Power	8	10	11	0 ~ +20	dBm
Frequency Range	2.4	—	2.4835	2.4 ≤ f ≤ 2.4835	GHz
20 dB Bandwidth	—	919.5	—	≤ 1000	KHz
Δf1avg Maximum Modulation	140	165	175	140 < Δf1avg < 175	KHz
Δf2max Minimum Modulation	—	135	—	≥ 115	KHz
Δf2avg/Δf1avg	—	0.9	—	≥ 0.80	—

© Copyright 2017 Laird. All Rights Reserved

Initial Carrier Frequency		—	+/-5	—	≤±75	KHz
Drift Rate (DH1 package)		—	4	—	≤ 20	KHz/50 µs
Drift (DH3 packet)		—	8	—	≤25	KHz
Drift (DH5 packet)		—	7	—	≤ 40	KHz
Adjacent Channel Power	F≥ ± 3MHz	—	-50	—	< -40	dBm
	F = ± 2MHz	—	-46	—	≤ -20	dBm
	F = ± 1MHz	—	-15	—	N/A	dBm

Table 17: Enhanced data rate transmitter performance 25°C (3.3V)

Test Parameter		Min	Typ	Max	BT Spec.	Unit
Relative Transmit Power		5	7	9		dBm
Max Carrier Frequency Stability |wo|	2-DH5	—	1	—	≤ ±10	KHz
	3-DH5	—	1	—		
Max Carrier Frequency Stability |wi|	2-DH5	—	4	—	≤ ±75	KHz
	3-DH5	—	4	—		
Max Carrier Frequency Stability |w0+wi|	2-DH5	—	5	—	≤ ±75	KHz
	3-DH5	—	5	—		
RMS DEVM	2-DH5	—	4	—	≤ 20	%
	3-DH5	—	4	—	≤13	%
Peak DEVM	2-DH5	—	9	—	≤ 35	%
	3-DH5	—	9	—	≤ 25	%
99% DEVM	2-DH5	—	12	—	≤ 30	%
	3-DH5	—	12	—	≤ 20	%
EDR Differential Phase Encoding		—	99	—	≥ 99	%
Adjacent Channel Power	F≥ ± 3MHz	—	TBD	—	< -40	dBm
	F = ± 2MHz	—	TBD	—	≤ -20	dBm

Table 18: Basic rate receiver performance at 3.3V

Test Parameter		Min	Typ	Max	BT Spec.	Unit
Sensitivity (1DH5)	BER ≤ 0.1%	—	-95	-92	≤ -70	dBm
Maximum Input	BER ≤ 0.1%	-20	-10	—	≥ -20	dBm
Carrier-to-Interferer Ratio (C/I)	Co-Channel	—	10	11	11	
	C/I (± 1 MHz)	—	-4	0	0	dB
	C/I (± 2 MHz)	—	-45	—	-30	dB
	C/I (± 3 MHz)	—	-49	—	-40	dB
Maximum Level of Intermodulation Interferers		-39	-30	-	≥ -39	dBm

PRELIMINARY

© Copyright 2017 Laird. All Rights Reserved

Table 19: Enhanced data rate receiver performance 3.3V

Test Parameter		Min	Typ	Max	Bluetooth Specification	Unit
Sensitivity (BER ≤0.01%)	π/4 DQPSK	—	-94	-91	≤ -70	dBm
	8 DPSK	—	-88	-85	≤ -70	dBm
Maximum Input (BER ≤0.1%)	π/4 DQPSK	-20	—	—	≥ -20	dBm
	8 DPSK	-20	—	—	≥ -20	dBm
Co-Channel C/I (BER ≤0.1%)	π/4 DQPSK	—	10	13	≤ ±13	dB
	8 DPSK	—	16	20	≤ ±20	dB
Adjacent Channel C/I (1MHz)	π/4 DQPSK	—	-9	0	≤ 0	dB
	8 DPSK	—	-6	5	≤5	dB
Second Adjacent Channel C/I (2MHz)	π/4 DQPSK	—	-47	-30	≤ -30	dB
	8 DPSK	—	-42	-25	≤ -25	dB
Third Adjacent Channel C/I (3MHz)	π/4 DQPSK	—	-51	-40	≤ -40	dB
	8 DPSK	—	-48	-33	≤ -33	dB
Out-of-band blocking	30-2000MHz	—	-12.5	—	—	dBm
	2-2.399GHz	—	-12.4	—	—	dBm
	2.484-3GHz	—	-18	—	—	dBm
	3-12.75GHz	—	-2.6	—	—	dBm

PRELIMINARY

© Copyright 2017 Laird. All Rights Reserved

10 Host Interface Specifications

10.1 SDIO Specifications

The 60-SIPT series SDIO host interface pins are powered from the VIO_SD voltage supply. The SDIO electrical specifications are identical for the 1-bit SDIO and 4-bit SDIO modes.

10.1.1 Default Speed, High-speed Modes

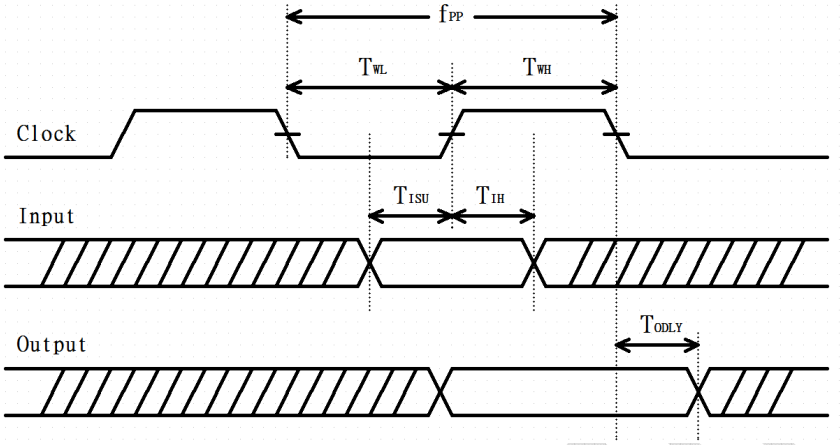

Figure 2: SDIO protocol timing diagram--- default mode (3.3V)

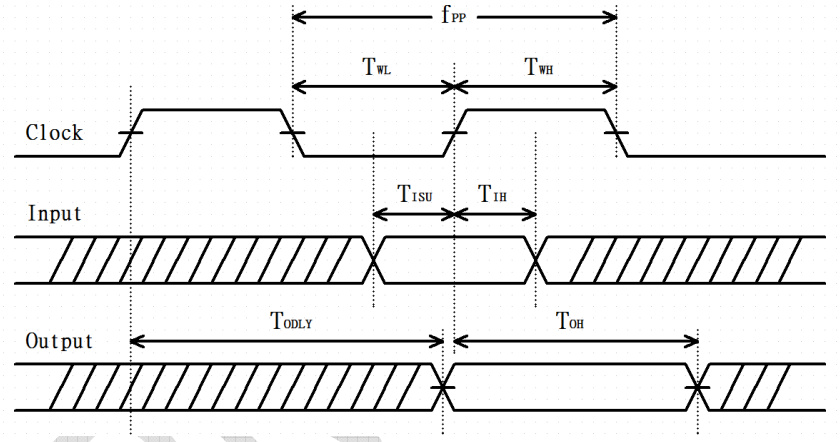

Figure 3: SDIO protocol timing diagram--- High-Speed mode (3.3V)

Note: Over full range of values specified in the Recommended Operating Conditions unless otherwise specified.

Table 20: SDIO timing requirements

Symbol	Parameter	Condition	Min.	Typ.	Max.	Unit
fPP	Clock Frequency	Default Speed	0	-	25	MHz
		High-Speed	0	-	50	

© Copyright 2017 Laird. All Rights Reserved

Symbol	Parameter	Condition	Min.	Typ.	Max.	Unit
T_{WL}	Clock low time	Default Speed High-Speed	10 7	- -	- -	ns
T_{WH}	Clock high time	Default Speed High-Speed	10 7	- -	- -	ns
T_{ISU}	Input Setup time	Default Speed High-Speed	5 6	- -	- -	ns
T_{IH}	Input Hold time	Default Speed High-Speed	5 2	- -	- -	ns
T_{ODLY}	Output delay time CL≦40pF (1 card)	Default Speed High-Speed	- -	- -	14 14	ns
T_{OH}	Output hold time	High-Speed	0	-	-	ns

10.1.2 SDR12, SDR25, SDR50 Mode (up to 100MHz) (1.8V)

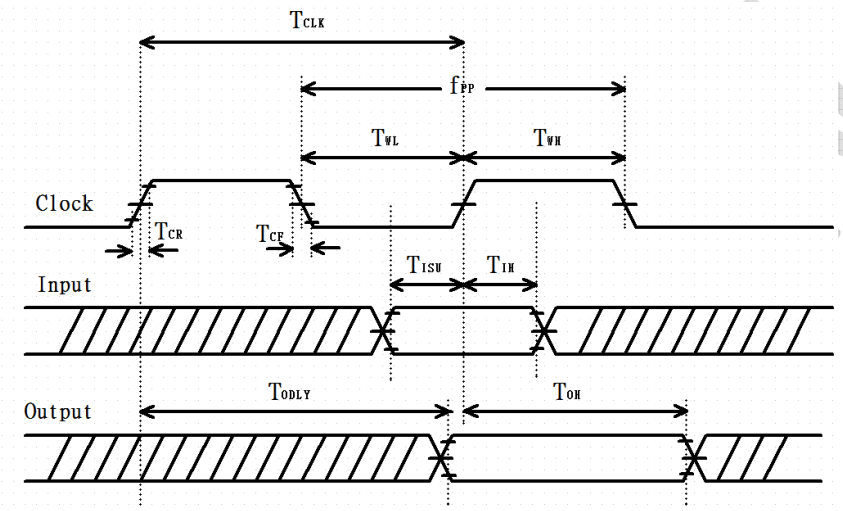

Figure 4: SDIO protocol timing Diagram--- SDR12, SDR25, SDR50 modes (up to 100 MHz) (1.8V)

Note: Over full range of values specified in the Recommended Operating Conditions unless otherwise specified.

Table 21: SDIO timing requirements--- SDR12, SDR25, SDR50 modes (up to 100 MHz) (1.8V)

Symbol	Parameter	Condition	Min.	Typ.	Max.	Unit
f_{PP}	Clock Frequency	SDR12/25/50	25	-	100	MHz
T_{ISU}	Input setup time	SDR12/25/50	3	--	-	ns
T_{IH}	Input Hold time	SDR12/25/50	0.8	-	-	ns
T_{CLK}	Clock Time	SDR12/25/50	10	-	40	ns
T_{CR}, T_{CF}	Raise time, Fall time T_{CR}, T_{CF} <2ns (max) at 100MHz C_{CARD}=10pF	SDR12/25/50	-	-	0.2*T_{CLK}	ns

© Copyright 2017 Laird. All Rights Reserved

Symbol	Parameter	Condition	Min.	Typ.	Max.	Unit
T_{ODLY}	Output delay time $C_L \leqq 30pF$	SDR12/25/50	-	-	7.5	ns
T_{OH}	Output hold time C_L=15pF	SDR12/25/50	1.5	-	-	ns

10.1.3 SDR104 Mode (208MHz) (1.8V)

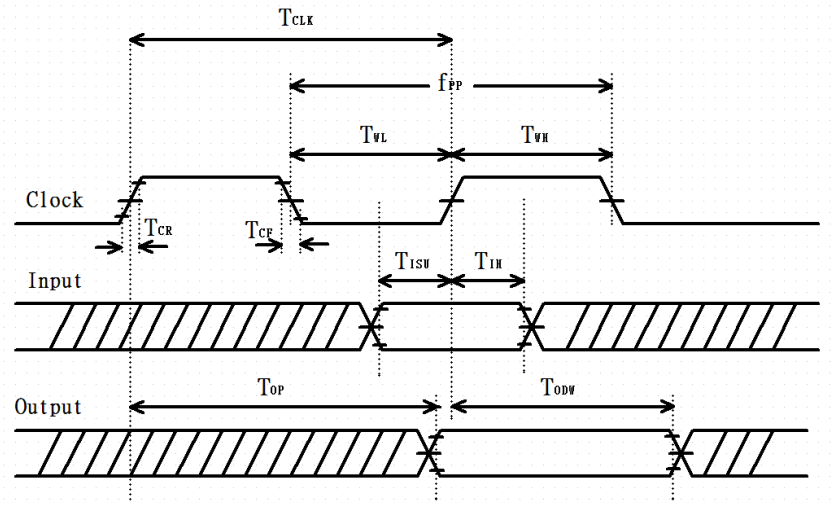

Figure 5: SDIO protocol timing Diagram--- SDR104 modes (up to 208 MHz) (1.8V)

Note: Over full range of values specified in the Recommended Operating Conditions unless otherwise specified.

Table 22: SDIO timing requirements--- SDR104 modes (up to 208MHz) (1.8V)

Symbol	Parameter	Condition	Min.	Typ.	Max.	Unit
f_{PP}	Clock Frequency	SDR104	0	-	208	MHz
T_{ISU}	Input setup time	SDR104	1.4	--	-	ns
T_{IH}	Input Hold time	SDR104	0.8	-	-	ns
T_{CLK}	Clock Time	SDR104	4.8	-	-	ns
T_{CR}, TCF	Raise time, Fall time T_{CR}, TCF <0.96ns (max) at 208MHz C_{CARD}=10pF	SDR104	-	-	0.2*T_{CLK}	ns
T_{OP}	Card Output phase	SDR104	0	-	10	ns
T_{ODW}	Output timing pf variable data window	SDR12/25/50	2.88	-	-	ns

© Copyright 2017 Laird. All Rights Reserved

10.1.4 DDR50 Mode (50MHz) (1.8V)

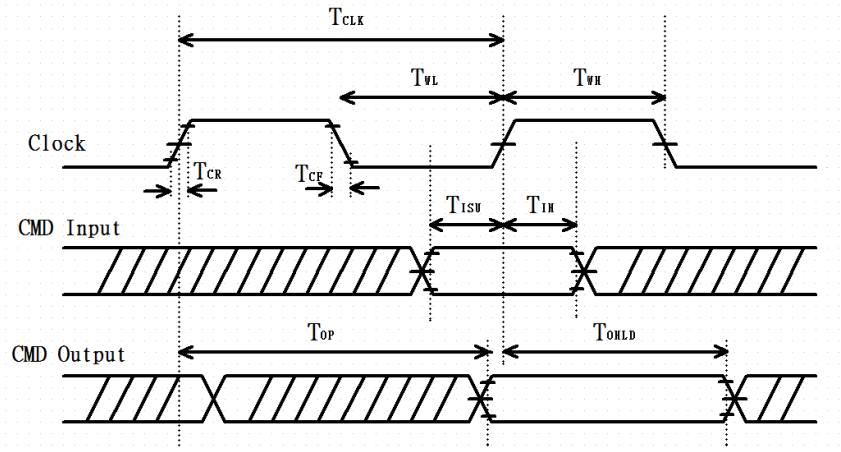

Figure 6: SDIO CMD timing diagram--- DDR50 modes (50 MHz) (1.8V)

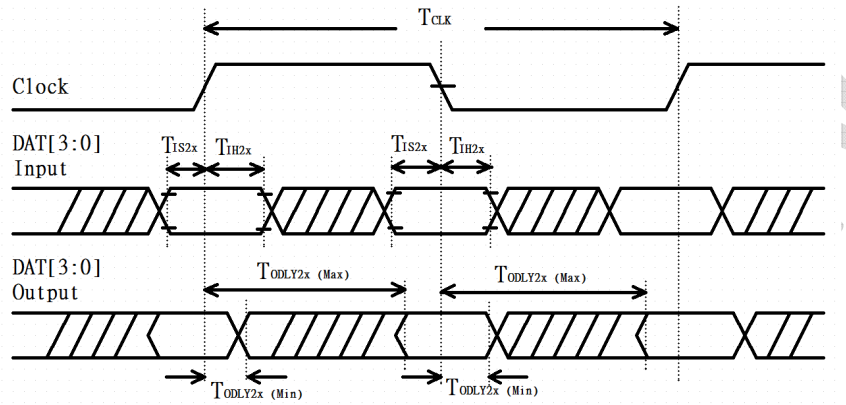

Figure 7: SDIO DAT[3:0] timing Diagram--- DDR50 modes (50 MHz) (1.8V)

Note: In DDR50 mode, DAT[3:0] lines are samples on both edges pf the clock (not applicable for CMD line)

Table 23: SDIO timing requirements – DDR50 modes (50 MHz)

Symbol	Parameter	Condition	Min.	Typ.	Max.	Unit
Clock						
T_{CLK}	Clock time 50MHz (max) between rising edge	DDR50	20	--	--	ns
T_{CR}, T_{CF}	Rise time, fall time T_{CR}, T_{CF} <4.00ns (max) at 50MHz. C_{CARD}=10pF	DDR50	--	--	0.2*T_{CLK}	ns
Clock Duty	--	DDR50	45	--	55	%
CMD Input (referenced to clock rising edge)						
T_{IS}	Input setup time $C_{CARD} \leqq 10pF$ (1 card)	DDR50	6	--	--	ns

© Copyright 2017 Laird. All Rights Reserved

Symbol	Parameter	Condition	Min.	Typ.	Max.	Unit
T_{IH}	Input hold time $C_{CARD} \leqq 10pF$ (1 card)	DDR50	0.8	--	--	ns
CMD Output (referenced to clock rising and failing edge)						
T_{ODLY}	Output delay time during data transfer mode $C_L \leqq 30pF$ (1 card)	DDR50	--	--	13.7	ns
T_{OHLD}	Output hold time $C_L \geq 15pF$ (1 card)	DDR50	1.5	--	--	ns
DAT[3:0] Input (referenced to clock rising and failing edges)						
T_{IS2X}	Input setup time $C_{CARD} \leqq 10pF$ (1 card)	DDR50	3	--	--	ns
T_{IH2X}	Input hold time $C_{CARD} \leqq 10pF$ (1 card)	DDR50	0.8	--	--	ns
DAT[3:0] Output (referenced to clock rising and failing edges)						
T_{ODLY2X} (max)	Output delay time during data transfer mode $C_L \leqq 25pF$ (1 card)	DDR50	--	--	7.0	ns
T_{ODLY2X} (min)	Output hold time $C_L \geq 15pF$ (1 card))	DDR50	1.5	--	--	ns

10.2 PCI Express Specifications

The PCI Express host interface pins are powered from the 1.8V generated by the PMU inside the 60-SIPT series.

10.2.1 Differential TX Output Electricals

Note: Over full range of values specified in the Recommended Operating Conditions unless otherwise specified.

Table 24: PCI Express TX Output Specifications – 2.5GT/s

Symbol	Parameter	Min.	Typ.	Max.	Unit
UI	Unit interval (UI) The specified UI is equivalent to a tolerance of +/- 300ppm for each Refclk source. Period does not account for SSC induced variations.	399.88	-	400.12	Ps
$V_{TX\text{-}DIFF\text{-}PP}$	Differential peak-to-peak TX voltage swing $V_{TX\text{-}DIFF\text{-}PP}=2*\lvert V_{TXD+} - V_{TXD-}\rvert$	0.8	-	1.2	V
$V_{TX\text{-}DIFF\text{-}PP\text{-}LOW}$	Low power differential peak-to-peak TX voltage swing $V_{TX\text{-}DIFF\text{-}PP}=2*\lvert V_{TXD+} - V_{TXD-}\rvert$	0.4	-	1.2	V
$V_{TX\text{-}DE\text{-}RATIO\text{-}3.5dB}$	Tx de-emphasis level ratio (3.5dB)	3.0	-	4.0	V
$T_{TX\text{-}EYE}$	Tx eye including all jitter sources	0.75	-	-	UI

© Copyright 2017 Laird. All Rights Reserved

Symbol	Parameter	Min.	Typ.	Max.	Unit
$T_{TX-EYE-MEDIAN-to-MAX-JITTER}$	Maximum time between jitter median and maximum deviation from median	-	-	0.125	UI
$T_{TX-RISE-FALL}$	Tx rise/fall time Measured differentially from 20% to 80%	0.125	-	-	UI
$RL_{TX-DIFF}$	Tx package plus Si differential return loss	10	-	-	dB
RL_{TX-CM}	Tx package plus Si common mode return loss	6	-	-	dB
$V_{TX-CM-AC-P}$	Tx AC common mode voltage	-	20	-	mV
$I_{TX-SHORT}$	Tx short circuit current limit	-	-	90	mA
$V_{TX-DC-CM}$	Tx DC common mode voltage	-	-	3.6	V
$V_{TX-CM-DC-ACTIVE-IDLE-DELTA}$	Absolute delta of DC common mode voltage during L0 and electrical idle.	0	-	100	mV
$V_{TX-IDLE-DIFF-AC-p}$	Electrical idle differential peak output voltage	0	-	20	mV
$T_{TX-IDLE-MIN}$	Minimum time spent in electrical idle	20	-	-	ns
$T_{TX-IDLE-SET-TO-IDLE}$	Maximum time to transition to a valid electrical idle after sending an electrical idle ordered set	-	-	8	ns
$T_{TX-IDLE-TO-DIFF-DATA}$	Maximum time to transition to valid diff signalling after leaving electrical idle	-	-	8	ns
$T_{CROSLINK}$	Crosslink random timeout	-	-	1.0	ms
C_{TX}	AC coupling capacitor	75	-	200	nF

Note: Over full range of values specified in the Recommended Operating Conditions unless otherwise specified.

Table 25: PCI Express TX Output Specifications - 5GT/s

Symbol	Parameter	Min.	Typ.	Max.	Unit
UI	Unit interval (UI) The specified UI is equivalent to a tolerance of +/-300ppm for each Refclk source. Period does not account for SSC induced variations.	199.94	-	200.06	Ps
$V_{TX-DIFF-PP}$	Differential peak-to-peak TX voltage swing $V_{TX-DIFF-PP}=2*\lvert V_{TXD+} - V_{TXD-}\rvert$	0.8	-	1.2	V
$V_{TX-DIFF-PP-LOW}$	Low power differential peak-to-peak TX voltage swing $V_{TX-DIFF-PP}=2*\lvert V_{TXD+} - V_{TXD-}\rvert$	0.4	-	1.2	V
$V_{TX-DE-RATIO-3.5dB}$	Tx de-emphasis level ratio (3.5dB)	3.0	-	4.0	V
$V_{TX-DE-RATIO-6dB}$	Tx de-emphasis level ratio (6dB)	5.5	-	6.5	V
$T_{MIN-PULSE}$	Instantaneous lone pulse width Measured relative to rising/failing pulse	0.9	-	-	UI
T_{TX-EYE}	Tx eye including all jitter sources	0.75	-	-	UI
$T_{TX-HF-DJ-DD}$	Tx deterministic jitter > 1.5MHz Deterministic jitter only	-	-	0.15	UI

© Copyright 2017 Laird. All Rights Reserved

Symbol	Parameter	Min.	Typ.	Max.	Unit
$T_{TX-LF-RMS}$	Tx RMS jitter<1.5MHz Total energy measured over a 10KHz-1.5MHz range	-	3.0	-	Ps RMS
$T_{TX-RISE-FALL}$	Tx rise/fall time Measured differentially from 20% to 80%	0.15	-	-	UI
$RL_{TX-DIFF}$	Tx package plus Si differential return loss (0.05-1.25GHz) (1.25-2.5GHz)	10 8	-	-	dB
RL_{TX-CM}	Tx package plus Si common mode return loss	6	-	-	dB
$V_{TX-CM-AC-PP}$	Tx AC common mode voltage	-	-	100	mV
$I_{TX-SHORT}$	Tx short circuit current limit	-	-	90	mA
$V_{TX-DC-CM}$	Tx DC common mode voltage	-	-	3.6	V
$V_{TX-CM-DC-ACTIVE-IDLE-DELTA}$	Absolute delta of DC common mode voltage during L0 and electrical idle.	0	-	100	mV
$V_{TX-IDLE-DIFF-AC-p}$	Electrical idle differential peak output voltage $V_{TX-IDLE-DIFF-DC}= \lvert V_{TX-IDLE-D+} - V_{TX-IDLE-D-} \rvert \leqq 20mV$	0	-	20	mV
$V_{TX-IDLE-DIFF-DC}$	DC Electrical idle differential output voltage $V_{TX-IDLE-DIFF-DC}= \lvert V_{TX-IDLE-D+} - V_{TX-IDLE-D-} \rvert \leqq 5mV$	0	-	5	mV
$V_{TX-RCVDETECT}$	Voltage change allowed during receiver detection	0	-	600	mV
$T_{TX-IDLE-MIN}$	Minimum time spent in electrical idle	20	-	-	ns
$T_{TX-IDLE-SET-TO-IDLE}$	Maximum time to transition to a valid electrical idle after sending an electrical idle ordered set	-	-	8	ns
$T_{TX-IDLE-TO-DIFF-DATA}$	Maximum time to transition to valid diff signalling after leaving electrical idle	-	-	8	ns
$T_{CROSLINK}$	Crosslink random timeout	-	-	1.0	ms
C_{TX}	AC coupling capacitor	75	-	200	nF

10.2.2 Differential RX input Electricals

Note: Over full range of values specified in the Recommended Operating Conditions unless otherwise specified.

Table 26: PCI Express RX Output Specifications – 2.5GT/s

Symbol	Parameter	Min.	Typ.	Max.	Unit
UI	Unit interval (UI) The specified UI is equivalent to a tolerance of +/-300ppm for each Refclk source. Period does not account for SSC induced variations.	399.88	-	400.12	Ps
$V_{RX-DIFF-PP-CC}$	Differential RX peak-to-peak voltage for common Refclk RX architecture	0.175	-	1.2	V
$V_{RX-DIFF-PP-DC}$	Differential RX peak-to-peak voltage for data clocked Refclk RX architecture	0.175	-	1.2	V

© Copyright 2017 Laird. All Rights Reserved

Symbol	Parameter	Min.	Typ.	Max.	Unit
T_{RX-EYE}	Rx eye time opening Minimum eye time at Rx pins to yield a 10^{-12} BER	0.4	-	-	UI
$T_{RX-EYE-MEDIAN-to-MAX-JITTER}$	Maximum time delta between median and deviation from median	-	-	0.3	UI
$V_{RX-CM-ACp}$	AC peak common mode input voltage	-	-	150	mV
$RL_{RX-DIFF}$	Differential return loss	15	-	-	dB
RL_{RX-CM}	Common mode return loss	0	-	3.6	dB
$Z_{RX-DIFF-DC}$	DC differential input impedance	80	100	120	Ω
Z_{RX-DC}	DC input impedance	40	50	60	Ω
$Z_{RX-HIGH-IMP-DC}$	Powered down DC input impedance	200	-	-	KΩ
$V_{RX-IDLE-DET-DIFF-p-p}$	Electrical idle detect threshold	65	-	175	mV
$T_{RX-IDLE-DIFF-ENTERTIME}$	Unexpected electrical idle enter detect threshold integration time	-	-	10	ms
$L_{RX-SKEW}$	Total Skew	-	-	20	ns

Note: Over full range of values specified in the Recommended Operating Conditions unless otherwise specified.

Table 27: PCI Express RX Output Specifications – 5GT/s

Symbol	Parameter	Min.	Typ.	Max.	Unit
UI	Unit interval (UI) The specified UI is equivalent to a tolerance of +/- 300ppm for each Refclk source. Period does not account for SSC induced variations.	199.94	-	200.06	ps
$V_{RX-DIFF-PP-CC}$	Differential RX peak-to-peak voltage for common Refclk RX architecture	0.12	-	1.2	V
$V_{RX-DIFF-PP-DC}$	Differential RX peak-to-peak voltage for data clocked Refclk RX architecture	0.1	-	1.2	V
$T_{RX-TJ-CC}$	Maximum Rx inherent total timing error for common Refclk RX architecture	-	-	0.4	UI
$T_{RX-TJ-DC}$	Maximum Rx inherent total timing error for data clocked RX architecture	-	-	0.34	UI
$T_{RX-DJ-DD-CC}$	Maximum Rx inherent deterministic timing error for common Refclk RX architecture	-	-	0.3	UI
$T_{RX-DJ-DD-DC}$	Maximum Rx inherent deterministic timing error for data clocked RX architecture	-	-	0.24	UI
$T_{RX-MIN-PULSE}$	Minimum width pulse at Rx	0.6	-	-	UI
$V_{RX-CM-ACp}$	AC peak common mode input voltage	-	-	150	mV
$RL_{RX-DIFF}$	Differential return loss	15	-	-	dB
RL_{RX-CM}	Common mode return loss	1-	-	3.6	dB
$Z_{RX-DIFF-DC}$	DC differential input impedance	80	100	120	Ω
Z_{RX-DC}	DC input impedance	40	50	60	Ω

© Copyright 2017 Laird. All Rights Reserved

Symbol	Parameter	Min.	Typ.	Max.	Unit
$Z_{RX-HIGH-IMP-DC}$	Powered down DC input impedance	200	-	-	KΩ
$V_{RX-IDLE-DET-DIFF-p-p}$	Electrical idle detect threshold	65	-	175	mV
$T_{RX-IDLE-DIFF-ENTERTIME}$	Unexpected electrical idle enter detect threshold integration time	-	-	10	ms
$L_{RX-SKEW}$	Total Skew	-	-	20	ns

10.3 USB Specifications

10.3.1 USB LS Driver and Receiver Parameters

Notes: Over full range of values specified in the Recommended Operating Conditions unless otherwise specified.

The load is 100Ω differential for these parameters, unless other specified.

Table 28: USB LS Driver and Receiver Specifications

Symbol	Parameter	Min.	Typ.	Max.	Unit
BR	Baud rate	-	1.5	-	Mbps
BR_{PPM}	Baud rate tolerance	-15000	-	15000	ppm
Driver Specifications					
V_{OH}	Output signal ended high Defined with 1.425KΩ pull-up resistor to 3.6V	2.8	-	3.6	V
V_{OL}	Output signal ended low Defined with 1.425KΩ pull-up resistor to ground	0.0	-	0.3	V
V_{CRS}	Output signal crossover voltage	1.3		2.0	V
T_{LR}	Data fall time Defined from 10% to 90% for raise time and 90% to 10% for fall time	75.0	-	300.0	ns
T_{LF}	Data rise time Defined from 10% to 90% for raise time and 90% to 10% for fall time	75.0	-	300.0	ns
T_{LRFM}	Rise and fall time matching	80.0	-	125.0	%
T_{UDJ1}	Source jitter total: to next transition *Including frequency tolerance. Timing difference between the differential data signals. *Defined at crossover point of differential signals	-95	-	95	ns
T_{UDJ2}	Source jitter total: for paired transitions *Including frequency tolerance. Timing difference between the differential data signals. *Defined at crossover point of differential signals	-150	-	150	ns
Receiver Specifications					

PRELIMINARY

© Copyright 2017 Laird. All Rights Reserved

V_{IH}	Input signal ended high	2.0	-	-	V
V_{IL}	Input signal ended low	-	-	0.8	V
V_{DI}	Differential input sensitivity	0.2	-	-	V

10.3.2 USB FS Driver and Receiver Parameters

Notes: Over full range of values specified in the Recommended Operating Conditions unless otherwise specified.

The load is 100Ω differential for these parameters, unless other specified.

Table 29: USB FS Driver and Receiver Specifications

Symbol	Parameter	Min.	Typ.	Max.	Unit
BR	Baud rate	-	12.0	-	Mbps
BR_{PPM}	Baud rate tolerance	-2500	-	2500	ppm
Driver Specifications					
V_{OH}	Output signal ended high Defined with 1.425KΩ pull-up resistor to 3.6V	2.8	-	3.6	V
V_{OL}	Output signal ended low Defined with 1.425KΩ pull-up resistor to ground	0.0	-	0.3	V
V_{CRS}	Output signal crossover voltage	1.3		2.0	V
T_{FR}	Output raise time Defined from 10% to 90% for raise time and 90% to 10% for fall time	-4.0	-	20.0	ns
T_{FL}	Output fall time Defined from 10% to 90% for raise time and 90% to 10% for fall time	-4.0	-	20.0	ns
T_{DJ1}	Source jitter total: to next transition *Including frequency tolerance. Timing difference between the differential data signals. *Defined at crossover point of differential signals	-3.5	-	3.5	ns
T_{DJ2}	Source jitter total: for paired transitions *Including frequency tolerance. Timing difference between the differential data signals. *Defined at crossover point of differential signals	-4.0	-	4.0	ns
T_{FDEOP}	Source jitter for differential transition to SE0 transition. Defined at crossover point of differential signals	-2.0	-	5.0	ns
Receiver Specifications					
V_{IH}	Input signal ended high	2.0	-	-	V
V_{IL}	Input signal ended low	-	-	0.8	V
V_{DI}	Differential input sensitivity	0.2	-	-	V
T_{JR1}	Receiver jitter: to next transition	-18.5	-	18.5	ns

PRELIMINARY

© Copyright 2017 Laird. All Rights Reserved

Symbol	Parameter	Min.	Typ.	Max.	Unit
	Defined at crossover point of differential data signals				
T_{JR2}	Receiver jitter: for paired transitions Defined at crossover point of differential data signals	-9.0	-	9.0	ns

10.3.3 USB HS Driver and Receiver Parameters

Notes: Over full range of values specified in the Recommended Operating Conditions unless otherwise specified.

The load is 100Ω differential for these parameters, unless other specified.

Table 30: USB HS Driver and Receiver Specifications

Symbol	Parameter	Min.	Typ.	Max.	Unit
BR	Baud rate	-	480	-	Mbps
BR_{PPM}	Baud rate tolerance	-500	-	500	ppm
Driver Specifications					
V_{HSOH}	Data signal high	360	-	440	mV
V_{HSOL}	Data signal low	-10	-	10	mV
T_{HSR}	Data rise time Defined from 10% to 90% for raise time and 90% to 10% for fall time	500	-	-	ns
T_{HSF}	Data fall time Defined from 10% to 90% for raise time and 90% to 10% for fall time	-500	-	-	ns
Receiver Specifications					
V_{HSCM}	Input signal ended low	-50	-	500	mV

PRELIMINARY

© Copyright 2017 Laird. All Rights Reserved

10.4 PCM Interface Specifications

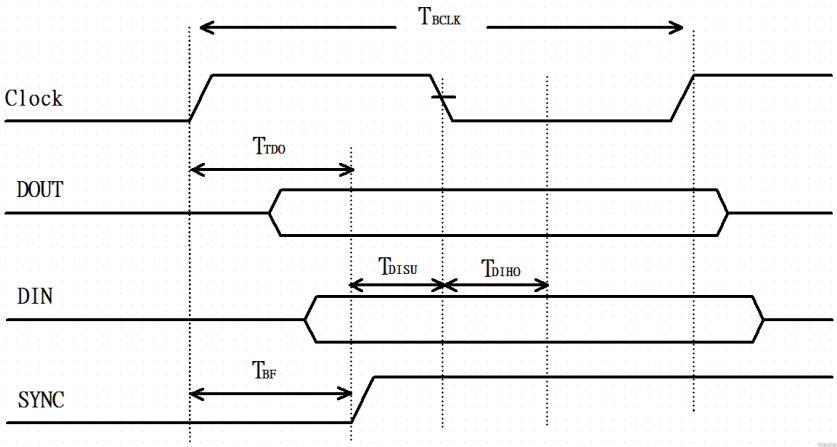

Figure 8: PCM Timing Specification – Master Mode

Table 31: PCM Timing Specification – Master Mode

Symbol	Parameter	Min.	Typ.	Max.	Unit
F_{BCLK}	-	-	2/2.048	-	MHz
Duty $Cycle_{BCLK}$	-	0.4	0.5	0.6	-
$T_{BCLK\ rise/fall}$	-	-	3	-	ns
T_{DO}	-	-	-	15	ns
T_{DISU}	-	20	-	-	ns
T_{DIHO}	-	15	-	-	ns
T_{BF}	-	-	-	15	ns

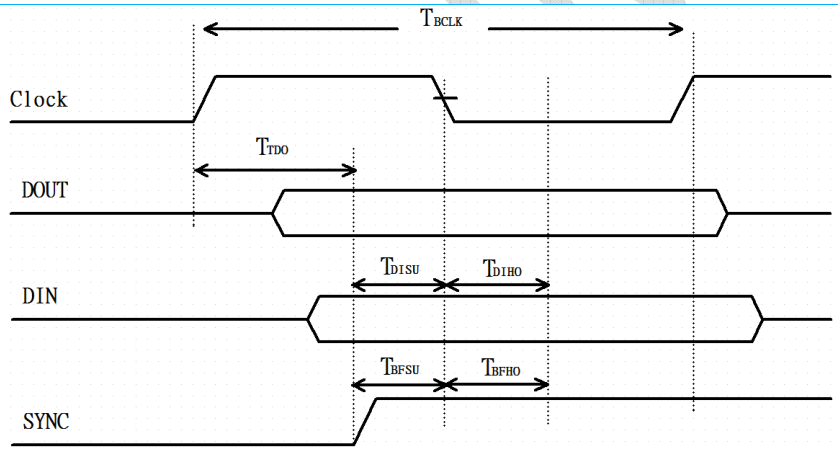

Figure 9: PCM Timing Specification – Slave Mode

Table 32: PCM Timing Specification – Slave Mode

Symbol	Parameter	Min.	Typ.	Max.	Unit
F_{BCLK}	-	-	2/2.048	-	MHz
Duty $Cycle_{BCLK}$	-	0.4	0.5	0.6	-
$T_{BCLK\ rise/fall}$	-	-	3	-	ns

© Copyright 2017 Laird. All Rights Reserved

Symbol	Parameter	Min.	Typ.	Max.	Unit
TDO	-	-	-	30	ns
TDISU	-	15	-	-	ns
TDIHO	-	10	-	-	ns
TBFSU	-	15	-	-	ns
TBFHO	-	10	-	-	ns

11 PIN DEFINITIONS

Note: AVDD18 is generated by PMU internally. No need to power from outside the SIP.

Table 33: Pin definitions of 60-SIPT series

Pin #	Name	Type	Voltage Ref.	Description	If Not Used
1	PDn	I	-	Full Power-Down (input) (Active low) 0=full power-down mode; 1=normal mode PDn can accept an input range from 1.8V to 3.6V **PDn must be high for normal operation. Please connect to pin-32 (1.8V_OUT) through 49.9KΩ.**	--
2	GND	-	-	Ground	GND
3	GND	-	-	Ground	GND
4	ANT0 (Wi-Fi/BT)	A,I/O	-	RF Transmit/Receive Wi-Fi and BT share the same path.	50Ω Load
5	GND	-	-	Ground	GND
6	GND	-	-	Ground	GND
7	GND	-	-	Ground	GND
8	GND	-	-	Ground	GND
9	GND	-	-	Ground	GND
10	GND	-	-	Ground	GND
11	GND	-	-	Ground	GND
12	ANT1 (Wi-Fi only)	A,I/O	-	RF Transmit/Receive Wi-Fi only	50Ω Load
13	GND	-	-	Ground	GND
14	GND	-	-	Ground	GND
15	CONFIG_HOST2	I, PU	AVDD18	Host interface configuration setting. Detail configuration table are shown in Table 32 To set a configuration bit to “0”, attach a 100kΩ resistor from the pin to ground. No external circuitry is required to set a configuration bit to “1”.	-
16	CONFIG_HOST1	I, PU	AVDD18	Host interface configuration setting. Detail configuration table are shown in Table 32 To set a configuration bit to “0”, attach a 100kΩ resistor from the pin to ground.	-

© Copyright 2017 Laird. All Rights Reserved

Pin #	Name	Type	Voltage Ref.	Description	If Not Used
				No external circuitry is required to set a configuration bit to “1”.	
17	CONFIG_HOST0	I, PU	AVDD18	Host interface configuration setting. Detail configuration table are shown in Table 32 To set a configuration bit to “0”, attach a 100kΩ resistor from the pin to ground. No external circuitry is required to set a configuration bit to “1”.	-
18	GND	-	-	Ground	GND
19	PCM_CLK	I/O	VIO	PCM Clock Signal (Optimal) Optimal clock used for some codecs. Output if Master mode; Input if Slave mode.	N/C
20	PCM_DOUT	O	VIO	PCM Data	N/C
21	PCM_SYNC	I/O	VIO	PCM Sync Pulse Signal Output if Master mode; Input if Slave mode.	N/C
22	PCM_DIN	I	VIO	PCM Data	N/C
23	GPIO0	I/O	VIO	General purpose I/O pin.	N/C
24	GND	-	-	Ground	GND
25	PCIE_WAKEn	I/O	VIO	PCIe wake signal (input/output) (active low)	N/C
26	PCIE_CLKREQn	I/O	VIO	PCIe clock request (input/output) (active low)	GND
27	PCIE_PERSTn	I, PD	VIO	PCIe host indication to reset the device (input) (active low)	N/C
28	PCIE_W_DISABLEn	I, PU	VIO	PCIe host indication to disable the WLAN function of the device (input) (active low)	N/C
29	LTE_SOUT/ JTAG_TDO	O, PD O, PD	VIO	Serial data to external LTE device/ JTAG Test Data Out (TDO)	N/C
30	LTE_SIN/ JTAG_TDI	I, PD I, PD	VIO	Serial data from external LTE device/ JTAG Test Data Input (TDI)	N/C
31	VIO	Power	-	1.8V/2.5V/3.3V Digital I/O Power Supply	-
32	1.8V_OUT	Power	-	1.8V output from 60-SIPT series. Used to pull-up the PDn pin for POR. Note: Do NOT used as power source for other circuits.	N/C
33	GND	-	-	Ground	GND
34	32KHz	I, PU	VIO	Sleep Clock Input An external sleep clock of 32.768KHz with minimum +/-250ppm is required for power saving mode	-
35	GND	-	-	Ground	GND
36	PCIE_RCLK_N	I	AVDD18	PCIe Differential Clock Input-Negative	N/C
37	PCIE_RCLK_P	I	AVDD18	PCIe Differential Clock Input-Positive	N/C
38	GND	-	-	Ground	GND

© Copyright 2017 Laird. All Rights Reserved

Pin #	Name	Type	Voltage Ref.	Description	If Not Used
39	PCIE_TX_P	O	AVDD18	PCIe Transmit Data-Positive	N/C
40	PCIE_TX_N	O	AVDD18	PCIe Transmit Data-Negative	N/C
41	GND	-	-	Ground	GND
42	PCIE_RX_N	I	AVDD18	PCIe Receive Data-Negative	N/C
43	PCIE_RX_P	I	AVDD18	PCIe Receive Data-Positive	N/C
44	GND	-	-	Ground	GND
45	USB_DN	I/O	3V3	USB Differential Data-Negative	N/C
46	USB_DP	I/O	3V3	USB Differential Data-Positive	N/C
47	GND	-	-	Ground	GND
48	3V3	Power	-	3.3V module power supply **Note:** A 10u MLCC is needed for this pin. Place the capacitor close to this pin as possible. Ref. parts: GRM188R60J106ME47D (MURATA) or CC0805KKX7R6BB106 (YAGO)	-
49	3V3	Power	-	3.3V module power supply **Note:** A 10u MLCC is needed for this pin. Place the capacitor close to this pin as possible. Ref. parts: GRM188R60J106ME47D (MURATA) or CC0805KKX7R6BB106 (YAGO)	-
50	GND	-	-	Ground	GND
51	PMU_EN	I		Enable input for all Regulators inside the 60-SIPT series when it is “H” state. The 60-SIPT will be off when it is “L” state. Note: DO NOT float this pin. Pull-up to 3.3V with 100K for normal operation.	100K, PU
52	VIO_SD	Power	-	1.8V/3.3V Digital I/O SDIO Power Supply	-
53	SDIO_DATA0	I/O, PU	VIO_SD	SDIO 4-bit Mode DATA line Bit[0]	N/C
54	SDIO_DATA1	I/O, PU	VIO_SD	SDIO 4-bit Mode DATA line Bit[1]	N/C
55	SDIO_DATA2	I/O, PU	VIO_SD	SDIO 4-bit Mode DATA line Bit[2]	N/C
56	SDIO_DATA3	I/O, PU	VIO_SD	SDIO 4-bit Mode DATA line Bit[3]	N/C
57	SDIO_CMD	I/O, PU	VIO_SD	SDIO 4-bit Mode Command/Response	N/C
58	SDIO_CLK	I, PU	VIO_SD	SDIO 4-bit Mode Clock Input	N/C
59	GND	-	-	Ground	GND
60	UART_TXD	O, WPU	VIO	UART Serial Data Output	N/C
61	UART_RXD	I, WPU	VIO	UART Serial Data Input	N/C
62	UART_CTSn	I, PU	VIO	UART Clear to Send (Active low)	N/C
63	UART_RTSn	O, WPU	VIO	UART Request to Send (Active low)	N/C
64	GND	-	-	Ground	GND
65	JTAG_TCK	I, PU	VIO	JTAG Test Clock (input)	N/C
66	JTAG_TMS	I, PU	VIO	JTAG Test Controller Select (input)	N/C

© Copyright 2017 Laird. All Rights Reserved

Pin #	Name	Type	Voltage Ref.	Description	If Not Used
67	LED_OUT_BT	O, PU	VIO	LED indicator for BT with 10mA drive capability.	N/C
68	LED_OUT_WLAN	O, PU	VIO	LED indicator for WLAN with 10mA drive capability	N/C
69-84	GND	-	-	Thermal Ground Pad **(Important for RF performance and thermal dissipation; please flow the reference design)**	GND

12 Host Configuration Options

60-SIPT series support various host configurations for WLAN and BT. Its detail configurations are shown in following table (**Error! Reference source not found.**).

Table 34: Wi-Fi host interface configuration table

CONFIG_HOST [2-0]	WLAN	BT/BLE	Note
000	SDIO	UART	-
001	SDIO	SDIO	-
010	PCIe	USB 2.0	Initial USB 2.0 PHY and COM PHY PCIe portion
011	PCIe	UART	Initial only COM PHY PCIe portion
100	USB 2.0	UART	Initial USB 2.0 PHY
101	USB 2.0	USB 2.0	Initial only USB 2.0 PHY

13 Mechanical Specifications

Module dimensions of 60-SIPT series is 13 x 14 x 1.87 mm. Detail drawings are shown in Figure 10.

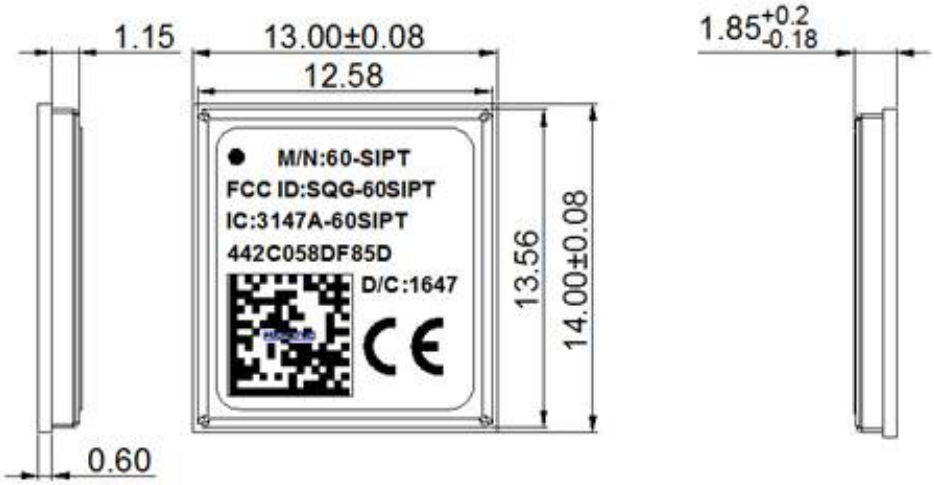

Figure 10: Mechanical drawing - 60-SIPT

© Copyright 2017 Laird. All Rights Reserved

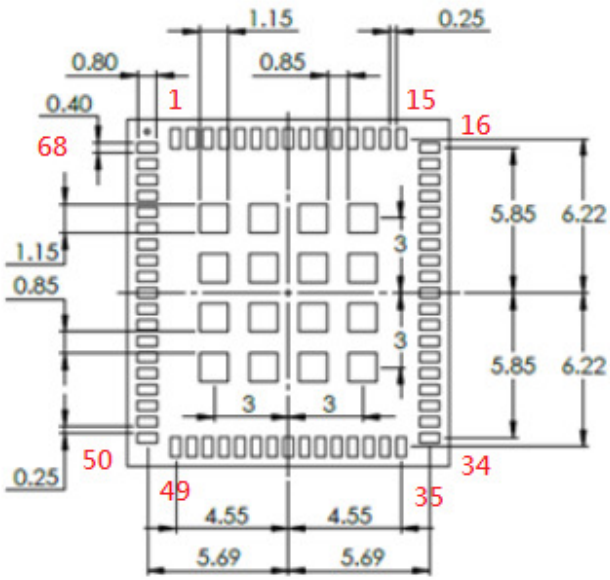

Figure 11: Module dimension of 60-SIPT series

Note: The Wi-Fi MAC address is located on the product label. The BT MAC address always immediately follows the Wi-Fi MAC address. Therefore, the BT MAC address is the Wi-Fi MAC address plus one.

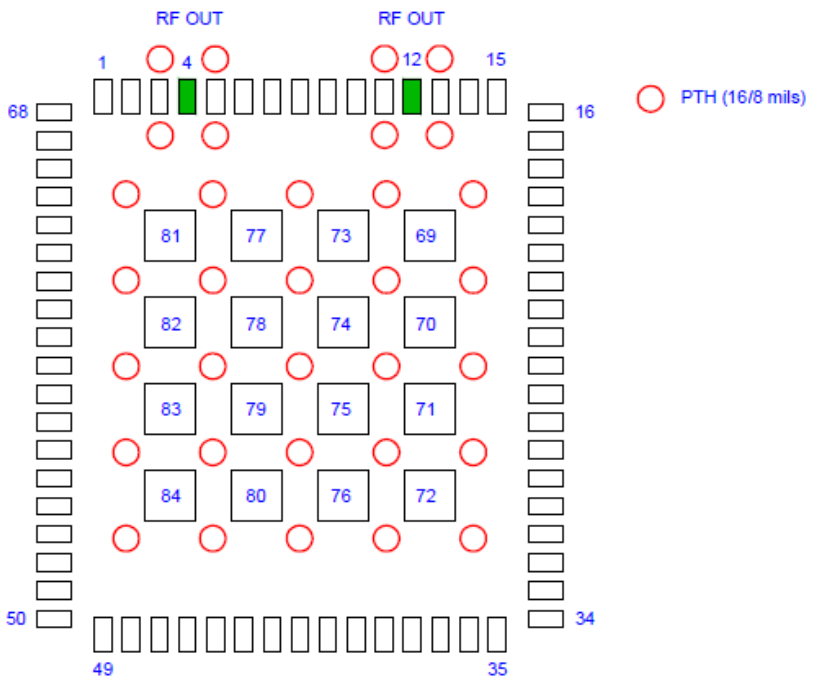

TOP VIEW

Figure 12: Recommended ground via

© Copyright 2017 Laird. All Rights Reserved

Recommend minimal via size and placement for grounding and thermal dissipation. Please double the ground via number when using laser via on HID process. More ground via and the use of 1-oz copper is recommended in our design to get better thermal dissipation.

Note: When soldering, the stencil thickness should be ≥ 0.1 mm.

14 RF Layout Design Guidelines

The following is a list of RF layout design guidelines and recommendation when installing a Laird radio into your device.

- Do not run antenna cables directly above or directly below the radio.
- Do not place any parts or run any high speed digital lines below the radio.
- If there are other radios or transmitters located on the device (such as a *Bluetooth* radio), place the devices as far apart from each other as possible. Also, make sure there is at least 25 dB isolation between these two antennas.
- Ensure that there is the maximum allowable spacing separating the antenna connectors on the Laird radio from the antenna. In addition, do not place antennas directly above or directly below the radio.
- Laird recommends the use of a double-shielded cable for the connection between the radio and the antenna elements.
- Be sure to put a 10uF capacitor on EACH 3.3V power pin. Also, place that capacitor to the pin as close as possible to make sure the internal PMU working correctly.
- Use proper electro-static-discharge (ESD) procedures when installing the Laird radio module.
- To get maximum throughput when operate at MIMO 2x2, two antennas with at least 25 dB isolation is recommended.
- To avoid negatively impacting Tx power and receiver sensitivity, do not cover the antennas with metallic objects or components.

15 Recommended Storage, Handling, Baking, and Reflow Profile

15.1 Required Storage Conditions

15.1.1 Prior to Opening the Dry Packing

The following are required storage conditions ***prior* to opening the dry packing**:

- Normal temperature: 5~40°C
- Normal humidity: 80% (Relative humidity) or less
- Storage period: One year or less

Note: Humidity means Relative Humidity.

15.1.2 After Opening the Dry Packing

The following are required storage conditions ***after* opening the dry packing** (to prevent moisture absorption):

- Storage conditions for one-time soldering:
  - Temperature: 5~25°C
  - Humidity: 60% or less

© Copyright 2017 Laird. All Rights Reserved

PRELIMINARY

  - Period: 48 hours or less after opening
- Storage conditions for two-time soldering

  Storage conditions following opening and prior to performing the 1st reflow:

  - Temperature: 5~25°C
  - Humidity: 60% or less
  - Period: 48 hours or less after opening

  Storage conditions following completion of the 1st reflow and prior to performing the 2nd reflow

  - Temperature: 5~25°C
  - Humidity: 60% or less
  - Period: 48 hours or less after completion of the 1st reflow

15.1.3 Temporary Storage Requirements after Opening

The following are temporary storage requirements after opening:

- Only re-store the devices *once* prior to soldering.
- Use a dry box or place desiccant (with a blue humidity indicator) with the devices and perform dry packing again using heat-sealing.

The following indicate the required storage period, temperature, and humidity for this temporary storage:

1. Storage temperature and humidity

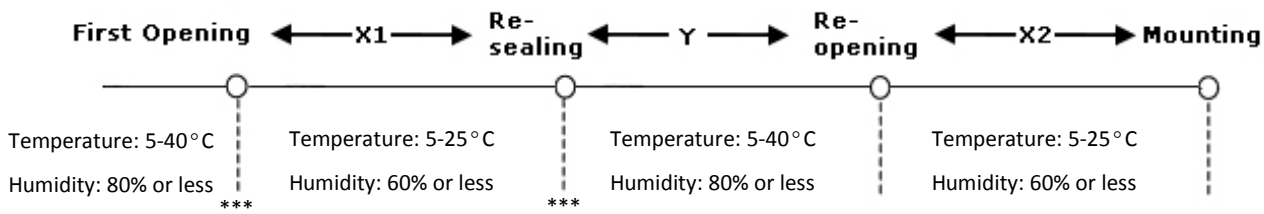

*** - External atmosphere temperature and humidity of the dry packing

2. Storage period
   - X1+X2 – Refer to After Opening the Dry Packing storage requirements.
   - Y – Two weeks or less.

15.2 Baking Conditions

Baking conditions and processes for the SSD50NBT follow the J-STD-033 standard which includes the following:

- The calculated shelf life in a sealed bag is 12 months at <40°C and <90% relative humidity.
- Once the packaging is opened, the SiP must be mounted (per MSL3/Moisture Sensitivity Level 3) within 168 hours at <30°C and <60% relative humidity.
- If the SiP is not mounted within 168 hours or if, when the packaging is opened, the humidity indicator card displays >10% humidity, then the product must be baked for 48 hours at 125°C (±5°C).

© Copyright 2017 Laird. All Rights Reserved

15.3 Surface Mount Conditions

The following soldering conditions are recommended to ensure device quality.

15.3.1 Soldering

Note: When soldering, the stencil thickness should be ≥ 0.1 mm.

Convection reflow or IR/Convection reflow (one-time soldering or two-time soldering in air or nitrogen environment)

- Measuring point – IC package surface
- Temperature profile:

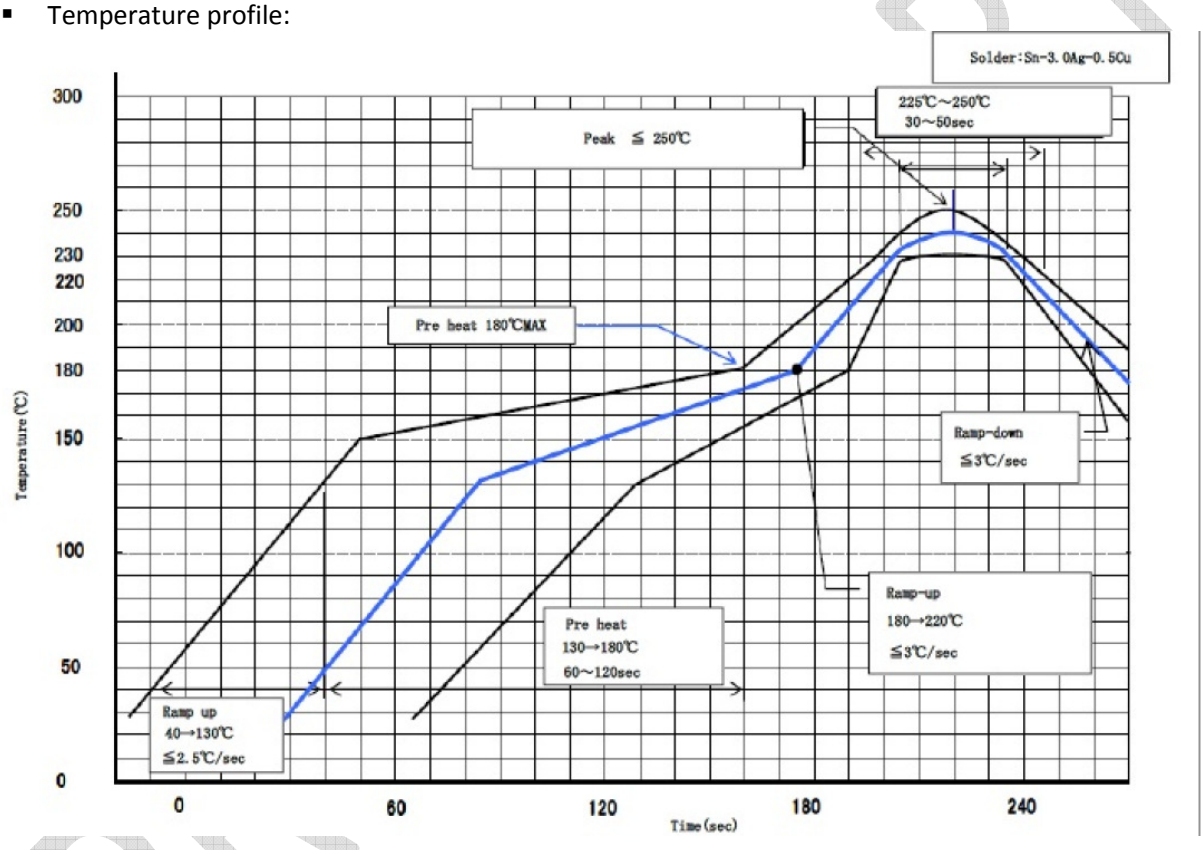

Ramp-up : 40 - 130 deg. Less than 2.5 deg./sec

Pre heat : 130 - 180 deg. 60 - 120 sec , 180 deg. MAX

Ramp-up : 180 - 220 deg. Less than 3 deg./sec

Peak Temperature : MAX 250 deg.

225 deg. ~ 250 deg. , 30 ~ 50 sec

Ramp-down : Less than 3 deg./sec

Figure 13 Temperature profile

© Copyright 2017 Laird. All Rights Reserved

15.3.2 Cautions When Removing the SIP from the Platform for RMA

- Bake the platform before removing the SIP from the platform. Reference baking conditions.
- Remove the SIP by using a hot air gun. This process should be carried out by a skilled technician.

Suggestion conditions:

- One-side component platform:
  - Set the hot plate at 280°C.
  - Put the platform on the hot plate for 8~10 seconds.
  - Remove the SIP from platform.

- Two-side components platform:
  - Use two hot air guns
  - On the bottom side, use a pre-heated nozzle (temperature setting of 200~250°C) at a suitable distance from the platform PCB.
  - On the top side, apply a remove nozzle (temperature setting of 330°C). Heat the SIP until it can be removed from platform PCB.

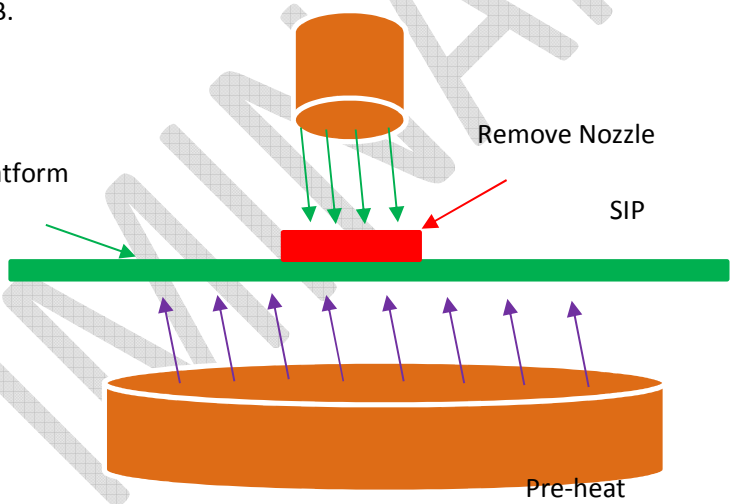

- Remove the residue solder under the bottom side of SIP.

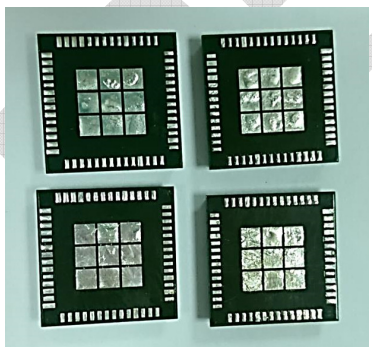

(Not accepted for RMA)

SIP with residue solder on the bottom

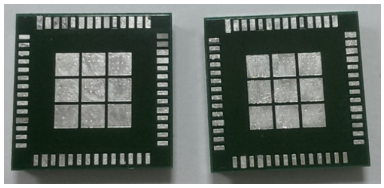

(Accepted for RMA analysis)

SIP without residue solder on the bottom

- Remove and clean the residue flux is needed.

© Copyright 2017 Laird. All Rights Reserved

15.3.3 Precautions for Use

- Opening/handing/removing must be done on an anti-ESD treated workbench. All workers must also have undergone anti-ESD treatment.
- The devices should be mounted within one year of the date of delivery.

16 REGULATORY

16.1 Certified Antennas

Model	Type	Connector	2400~2483.5MHz 5150~5250MHz 5250~5350MHz 5470~5725MHz 5725~5850MHz
Laird/NanoBlade-IP04	PCB Dipole	IPEX U.FL	2 dBi (2.4-2.5 GHz), 3.9 dBi (5.15-5.35 GHz), 4 dBi (5.6 GHz)
Laird/MAF95310 Mini NanoBlade Flex	PCB Dipole	IPEX U.FL	2.79 dBi @ 2.4 GHz, 3.38 dBi @ 5 GHz
Ethertronics/WLAN_1000146	Magnetic Dipole	IPEX U.FL	2.5dBi (2.390-2.490),3.5 dBi (4.900-5.100),3.5 dBi (5.150-5.350),3.5 dBi (5.70-5.900)
LSR/FlexPIFA 001-0016	PIFA	IPEX U.FL	2.5dBi@2.4GHz, 3dBi@5GHz
LSR/001-0009	Dipole	IPEX U.FL	2dBi@2.4GHz, 2dBi@5GHz

17 FCC AND IC REGULATORY

Model	US/FCC	CANADA/IC
60-SIPT series	SQG-SU60SIPT	3147A-SU60SIPT

The SSD50NBT has been designed to pass certification with the antenna listed below. The required antenna impedance is 50 ohms.

Model	Type	Connector	Peak gain (dBi)				
			2400~2483.5 MHz	5150~5250 MHz	5250~5350 MHz	5470~5725 MHz	5725~5850MHz
Laird/NanoBlade-IP04	PCB Dipole	IPEX U.FL	2.0 dBi	3.9 dBi	3.9 dBi	4.0dBi	
Laird/MAF95310 Mini NanoBlade Flex	PCB Dipole	IPEX U.FL	2.79 dB	3.38dBi			
Ethertronics/WLAN_1000146	Magnetic Dipole	IPEX U.FL	2.5 dBi	3.5 dBi			
LSR/FlexPIFA 001-0016	PIFA	IPEX U.FL	2.5dBi	3.0dBi			
LSR/001-0009	Dipole	IPEX U.FL	2.0dBi	2.0 dBi			

© Copyright 2017 Laird. All Rights Reserved

17.1 FCC

17.1.1 Federal Communication Commission Interference Statement

This equipment has been tested and found to comply with the limits for a Class B digital device, pursuant to Part 15 of the FCC Rules. These limits are designed to provide reasonable protection against harmful interference in a residential installation. This equipment generates, uses and can radiate radio frequency energy and, if not installed and used in accordance with the instructions, may cause harmful interference to radio communications. However, there is no guarantee that interference will not occur in an installation. If this equipment does cause harmful interference to radio or television reception, which can be determined by turning the equipment off and on, the user is encouraged to try to correct the interference by one of the following measures:

- Reorient or relocate the receiving antenna.
- Increase the separation between the equipment and receiver.
- Connect the equipment into an outlet on a circuit different from that to which the receiver is connected.
- Consult the dealer or an experienced radio/TV technician for help.

FCC Caution:

Any changes or modifications not expressly approved by the party responsible for compliance could void the user's authority to operate this equipment.

This device complies with Part 15 of the FCC Rules. Operation is subject to the following two conditions: (1) This device may not cause harmful interference, and (2) this device must accept any interference received, including interference that may cause undesired operation.

Important Note

Radiation Exposure Statement

This equipment complies with FCC radiation exposure limits set forth for an uncontrolled environment. This equipment should be installed and operated with minimum distance 20cm between the radiator and your body.

This transmitter must not be co-located or operating in conjunction with any other antenna or transmitter.

Country Code selection feature to be disabled for products marketed to the US/Canada.

This device is intended only for OEM integrators under the following conditions:

1. The antenna must be installed such that 20 cm is maintained between the antenna and users, and
2. The transmitter module may not be co-located with any other transmitter or antenna,
3. For all products market in US, OEM must limit the operation channels in CH1 to CH11 for 2.4G band by supplied firmware programming tool. OEM shall not supply any tool or info to the end-user regarding to Regulatory Domain change.

If the three conditions above are met, further ***transmitter*** testing is not required. However, the OEM integrator is still responsible for testing their end-product for any additional compliance requirements required with this module installed.

Important Note

If these conditions ***cannot be met*** (for example certain laptop configurations or co-location with another transmitter), then the FCC authorization is no longer considered valid and the FCC ID ***cannot*** be used on the final product. In these circumstances, the OEM integrator is responsible for re-evaluating the end product (including the transmitter) and obtaining a separate FCC authorization.

© Copyright 2017 Laird. All Rights Reserved

17.1.2 End Product Labeling

This transmitter module is authorized only for use in device where the antenna may be installed such that 20 cm may be maintained between the antenna and users. The end product must be labeled in a visible area with the following: ***Contains FCC ID: SQG-SSD50NBT***.

17.1.3 Manual Information to the End User

The OEM integrator must be aware not to provide information to the end user regarding how to install or remove this RF module in the user's manual of the end product which integrates this module.

The end user manual shall include all required regulatory information/warning as show in this manual.

17.2 Industry Canada

17.2.1 Industry Canada Statement

This device complies with Industry Canada's license-exempt RSSs. Operation is subject to the following two conditions:

- This device may not cause interference; and
- This device must accept any interference, including interference that may cause undesired operation of the device.

Le présent appareil est conforme aux CNR d'Industrie Canada applicables aux appareils radio exempts de licence. L'exploitation est autorisée aux deux conditions suivantes:

- l'appareil ne doit pas produire de brouillage;
- l'utilisateur de l'appareil doit accepter tout brouillage radioélectrique subi, même si le brouillage est susceptible d'en compromettre le fonctionnement.

This radio transmitter (IC: 3147A-SSD50NBT) has been approved by Industry Canada to operate with the antenna types listed below with the maximum permissible gain indicated. Antenna types not included in this list, having a gain greater than the maximum gain indicated for that type, are strictly prohibited for use with this device.

Le présent émetteur radio (IC: 3147A-MSD50NBT*)* a été approuvé par Industrie Canada pour fonctionner avec les types d'antenne énumérés ci-dessous et ayant un gain admissible maximal. Les types d'antenne non inclus dans cette liste, et dont le gain est supérieur au gain maximal indiqué, sont strictement interdits pour l'exploitation de l'émetteur.

17.2.2 Antenna Information

Model	Type	Connector	Peak gain (dBi)				
			2400~2483.5 MHz	5150~5250 MHz	5250~5350 MHz	5470~5725 MHz	5725~5850MHz
Laird/NanoBlade-IP04	PCB Dipole	IPEX U.FL	2.0 dBi	3.9 dBi	3.9 dBi	4.0 dBi	
Laird/MAF95310 Mini NanoBlade Flex	PCB Dipole	IPEX U.FL	2.79 dB	3.38 dBi			

© Copyright 2017 Laird. All Rights Reserved

PRELIMINARY

Model	Type	Connector	Peak gain (dBi)	
Ethertronics/WLAN_100146	Magnetic Dipole	IPEX U.FL	2.5 dBi	3.5 dBi
LSR/FlexPIFA 001-0016	PIFA	IPEX U.FL	2.5 dBi	3.0 dBi
LSR/001-0009	Dipole	IPEX U.FL	2.0 dBi	2.0 dBi

Caution:

(i) The device for operation in the band 5150–5250 MHz is only for indoor use to reduce the potential for harmful interference to co-channel mobile satellite systems;

(ii) For devices with detachable antenna(s), the maximum antenna gain permitted for devices in the bands 5250-5350 MHz and 5470-5725 MHz shall be such that the equipment still complies with EIRP limit;

(iii) For devices with detachable antenna(s), the maximum antenna gain permitted for devices in the band 5725-5850 MHz shall be such that the equipment still complies with the EIRP limits specified for point-to-point and non-point-to-point operation as appropriate; and

Operations in the 5.25-5.35GHz band are restricted to indoor usage only.

Avertissement:

(i) les dispositifs fonctionnant dans la bande de 5150 à 5250MHz sont réservés uniquement pour une utilisation à l'intérieur afin de réduire les risques de brouillage préjudiciable aux systèmes de satellites mobiles utilisant les mêmes canaux;

(ii) pour les dispositifs munis d'antennes amovibles, le gain maximal d'antenne permis pour les dispositifs utilisant les bandes de 5250 à 5350MHz et de 5470 à 5725 MHz doit être conforme à la limite de la p.i.r.e;

(iii) pour les dispositifs munis d'antennes amovibles, le gain maximal d'antenne permis (pour les dispositifs utilisant la bande de 5725 à 5850 MHz) doit être conforme à la limite de la p.i.r.e. spécifiée pour l'exploitation point à point et l'exploitation non point à point, selon le cas;

Les opérations dans la bande de 5.25-5.35GHz sont limités à un usage intérieur seulement.

17.2.3 Radiation Exposure Statement

This equipment complies with Canada radiation exposure limits set forth for an uncontrolled environment. This equipment should be installed and operated with minimum distance 20cm between the radiator and your body.

17.2.4 Déclaration d'exposition aux radiations

Cet équipement est conforme Canada limites d'exposition aux radiations dans un environnement non contrôlé. Cet équipement doit être installé et utilisé à distance minimum de 20cm entre le radiateur et votre corps.

PRELIMINARY

© Copyright 2017 Laird. All Rights Reserved

This device is intended only for OEM integrators under the following condition:

- The transmitter module may not be co-located with any other transmitter or antenna.

If the condition above is met, further transmitter test is not required. However, the OEM integrator is still responsible for testing their end-product for any additional compliance requirements required with this module installed.

Cet appareil est conçu uniquement pour les intégrateurs OEM dans les conditions suivantes:

- Le module émetteur peut ne pas être coïmplanté avec un autre émetteur ou antenne.

Tant que les 1 condition ci-dessus sont remplies, des essais supplémentaires sur l'émetteur ne seront pas nécessaires. Toutefois, l'intégrateur OEM est toujours responsable des essais sur son produit final pour toutes exigences de conformité supplémentaires requis pour ce module installé.

Important Note:

If these conditions cannot be met (for example certain laptop configurations or co-location with another transmitter), then the Canada authorization is no longer considered valid and the IC ID cannot be used on the final product. In these circumstances, the OEM integrator will be responsible for re-evaluating the end product (including the transmitter) and obtaining a separate Canada authorization.

Note Importante:

Dans le cas où ces conditions ne peuvent être satisfaites (par exemple pour certaines configurations d'ordinateur portable ou de certaines co-localisation avec un autre émetteur), l'autorisation du Canada n'est plus considéré comme valide et l'ID IC ne peut pas être utilisé sur le produit final. Dans ces circonstances, l'intégrateur OEM sera chargé de réévaluer le produit final (y compris l'émetteur) et l'obtention d'une autorisation distincte au Canada.

17.2.5 End Product Labeling

The end product must be labeled in a visible area with the following: ***Contains IC: 3147A-SSD50NBT***.

17.2.6 Plaque signalétique du produit final

Le produit final doit être étiqueté dans un endroit visible avec l'inscription suivante: ***Contient des IC: 3147A-SSD50NBT***.

17.2.7 Manual Information to the End User

The OEM integrator must be aware not to provide information to the end user regarding how to install or remove this RF module in the user's manual of the end product which integrates this module.

The end user manual shall include all required regulatory information/warning as show in this manual.

17.2.8 Manuel d'information à l'utilisateur final

L'intégrateur OEM doit être conscient de ne pas fournir des informations à l'utilisateur final quant à la façon d'installer ou de supprimer ce module RF dans le manuel de l'utilisateur du produit final qui intègre ce module.

Le manuel de l'utilisateur final doit inclure toutes les informations réglementaires requises et avertissements comme indiqué dans ce manuel.

PRELIMINARY

© Copyright 2017 Laird. All Rights Reserved

18 European Union Regulatory

The SSD50NBT has been tested for compliance with relevant standards for the EU market. SSD50NBT module was tested with antennas listed below.

Model	Type	Connector	2400~2483.5MHz 5150~5250MHz 5250~5350MHz 5470~5725MHz 5725~5850MHz
Laird/NanoBlade-IP04	PCB Dipole	IPEX U.FL	2 dBi (2.4-2.5 GHz), 3.9 dBi (5.15-5.35 GHz), 4 dBi (5.6 GHz)
Laird/MAF95310 Mini NanoBlade Flex	PCB Dipole	IPEX U.FL	2.79 dBi @ 2.4 GHz, 3.38 dBi @ 5 GHz
Ethertronics/WLAN_1000146	Magnetic Dipole	IPEX U.FL	2.5dBi (2.390-2.490),3.5 dBi (4.900-5.100),3.5 dBi (5.150-5.350),3.5 dBi (5.70-5.900)
LSR/FlexPIFA 001-0016	PIFA	IPEX U.FL	2.5dBi@2.4GHz, 3dBi@5GHz
LSR/001-0009	Dipole	IPEX U.FL	2dBi@2.4GHz, 2dBi@5GHz

The OEM should consult with a qualified test house before entering their device into an EU member country to make sure all regulatory requirements have been met for their complete device.

Reference the Declaration of Conformities listed below for a full list of the standards that the modules were tested to. Test reports are available upon request.

18.1 EU Declarations of Conformity

This device complies with the essential requirements of the Radio Equipment directive: 2014/53/EU. The following test methods have been applied to prove presumption of conformity with the essential requirements of the Radio Equipment directive **2014/53/EU**:

Manufacturer:	Laird
Products:	60-SIPT series
EU Directives:	2014/53/EU – Radio Equipment Directive (RED)

Reference standards used for presumption of conformity:

Article Number	Requirement	Reference standard(s)
3.1a	Low voltage equipment safety	EN 60950-1:2006+A11+A1:2010+A12:2011+A2 2013
	RF Exposure	EN 62311:2008 EN 50385:2002
3.1b	Protection requirements with respect to electromagnetic compatibility	EN 301 489-1 v2.2.0 (Draft) EN 301 489-17 v3.2.0 (Draft)
3.2	Means of the efficient use of the radio frequency spectrum	EN 300 328 v2.1.1 (2015-02) EN 301 893 v2.1.0 (Final Draft)

Declaration:

We, Laird, declare under our sole responsibility that the essential radio test suites have been carried out and that the above product to which this declaration relates is in conformity with all the applicable essential requirements of Article 3 of the EU Directive 1999/5/EC, when used for its intended purpose.

Place of Issue:	Laird W66N220 Commerce Court, Cedarburg, WI 53012 USA

© Copyright 2017 Laird. All Rights Reserved

PRELIMINARY

	tel: +1-262-375-4400 fax: +1-262-364-2649
Date of Issue:	May 2017
Name of Authorized Person:	Thomas T Smith, Director of EMC Compliance
Signature of Authorized Person:	

Maximum Output Power for Each Frequency

TBD

20.5 dBm, 5.15-5.25 GHz
20.5 dBm, 5.25-5.35 GHz
20.5 dBm, 5.47-5.725 GHz

Software Version for Testing

SW version: P95

The minimum distance between the user and/or any bystander and the radiating structure of the transmitter is 20 cm.

5150 ~ 5350 MHz is limited to indoor used in the following countries:

BE	DK	IE	FR	CY	LU	NL	PT	SK	UK	NO
BG	DE	EL	HR	LV	HU	AT	RO	FI	LI	TR
CZ	EE	ES	IT	LT	MT	PL	SI	SE	IS	CH

19 Ordering Information

Part Number	Description
60-SIPT series	2X2 802.11 a/b/g/n/ac with BT4.2 dual mode module.

19.1 General Comments

This is a preliminary datasheet. Please check with Laird for the latest information before commencing a design. If in doubt, ask.

Česky [Czech]	*[Jméno výrobce]* tímto prohlašuje, že tento *[typ zařízení]* je ve shodě se základními požadavky a dalšími příslušnými ustanoveními směrnice 1999/5/ES.
Dansk [Danish]	Undertegnede *[fabrikantens navn]* erklærer herved, at følgende udstyr *[udstyrets typebetegnelse]* overholder de væsentlige krav og øvrige relevante krav i direktiv 1999/5/EF.
Deutsch [German]	Hiermit erklärt *[Name des Herstellers]*, dass sich das Gerät *[Gerätetyp]* in Übereinstimmung mit den grundlegenden Anforderungen und den übrigen einschlägigen Bestimmungen der Richtlinie 1999/5/EG befindet.
Eesti [Estonian]	Käesolevaga kinnitab *[tootja nimi = name of manufacturer]* seadme *[seadme tüüp = type of equipment]* vastavust direktiivi 1999/5/EÜ põhinõuetele ja nimetatud direktiivist tulenevatele teistele asjakohastele sätetele.
English	Hereby, *[name of manufacturer]*, declares that this *[type of equipment]* is in compliance with the essential requirements and other relevant provisions of Directive 1999/5/EC.
Español [Spanish]	Por medio de la presente *[nombre del fabricante]* declara que el *[clase de equipo]* cumple con los requisitos esenciales y cualesquiera otras disposiciones aplicables o exigibles de la Directiva 1999/5/CE.

PRELIMINARY

© Copyright 2017 Laird. All Rights Reserved

el **Ελληνική [Greek]**	ΜΕ ΤΗΝ ΠΑΡΟΥΣΑ *[name of manufacturer]* ΔΗΛΩΝΕΙ ΟΤΙ *[type of equipment]* ΣΥΜΜΟΡΦΩΝΕΤΑΙ ΠΡΟΣ ΤΙΣ ΟΥΣΙΩΔΕΙΣ ΑΠΑΙΤΗΣΕΙΣ ΚΑΙ ΤΙΣ ΛΟΙΠΕΣ ΣΧΕΤΙΚΕΣ ΔΙΑΤΑΞΕΙΣ ΤΗΣ ΟΔΗΓΙΑΣ 1999/5/ΕΚ.
fr **Français [French]**	Par la présente *[nom du fabricant]* déclare que l'appareil *[type d'appareil]* est conforme aux exigences essentielles et aux autres dispositions pertinentes de la directive 1999/5/CE.
it **Italiano [Italian]**	Con la presente *[nome del costruttore]* dichiara che questo *[tipo di apparecchio]* è conforme ai requisiti essenziali ed alle altre disposizioni pertinenti stabilite dalla direttiva 1999/5/CE.
Latviski [Latvian]	Aršo*[name of manufacturer /izgatavotājanosaukums]* deklarē, ka*[type of equipment / iekārtas tips]*atbilstDirektīvas 1999/5/EK būtiskajāmprasībām un citiemar to saistītajiemnoteikumiem.
Lietuvių [Lithuanian]	Šiuo *[manufacturer name]* deklaruoja, kad šis *[equipment type]* atitinka esminius reikalavimus ir kitas 1999/5/EB Direktyvos nuostatas.
nl **Nederlands [Dutch]**	Hierbij verklaart *[naam van de fabrikant]* dat het toestel *[type van toestel]* in overeenstemming is met de essentiële eisen en de andere relevante bepalingen van richtlijn 1999/5/EG.
mt **Malti [Maltese]**	Hawnhekk, *[isem tal-manifattur]*, jiddikjara li dan *[il-mudel tal-prodott]* jikkonforma mal-ħtiġijiet essenzjali u ma provvedimenti oħrajn relevanti li hemm fid-Dirrettiva 1999/5/EC.
hu **Magyar [Hungarian]**	Alulírott, *[gyártó neve]* nyilatkozom, hogy a *[... típus]*megfelel a vonatkozó alapvetõ követelményeknek és az 1999/5/EC irányelv egyéb elõírásainak.
pl **Polski [Polish]**	Niniejszym *[nazwa producenta]* oświadcza, że *[nazwa wyrobu]* jest zgodny z zasadniczymi wymogami oraz pozostałymi stosownymi postanowieniami Dyrektywy 1999/5/EC.
pt **Português [Portuguese]**	*[Nome do fabricante]* declara que este *[tipo de equipamento]* está conforme com os requisitos essenciais e outras disposições da Directiva 1999/5/CE.
sl **Slovensko [Slovenian]**	*[Ime proizvajalca]* izjavlja, da je ta *[tip opreme]* v skladu z bistvenimi zahtevami in ostalimi relevantnimi določili direktive 1999/5/ES.
Slovensky [Slovak]	*[Menovýrobcu]*týmtovyhlasuje, že*[typzariadenia]*spĺňazákladnépožiadavky a všetkypríslušnéustanoveniaSmernice 1999/5/ES.
fi **Suomi [Finnish]**	*[Valmistaja = manufacturer]* vakuuttaa täten että *[type of equipment = laitteen tyyppimerkintä]* tyyppinen laite on direktiivin 1999/5/EY oleellisten vaatimusten ja sitä koskevien direktiivin muiden ehtojen mukainen.
sv **Svenska [Swedish]**	Härmed intygar *[företag]* att denna *[utrustningstyp]* står I överensstämmelse med de väsentliga egenskapskrav och övriga relevanta bestämmelser som framgår av direktiv 1999/5/EG.

19.1.1 Labeling Requirements

The end product must be labeled in a visible area with the following notice:

© Copyright 2017 Laird. All Rights Reserved. Any information furnished by Laird and its agents is believed to be accurate and reliable. All specifications are subject to change without notice. Responsibility for the use and application of Laird materials or products rests with the end user since Laird and its agents cannot be aware of all potential uses. Laird makes no warranties as to non-infringement nor as to the fitness, merchantability, or sustainability of any Laird materials or products for any specific or general uses. Laird, Laird Technologies, Inc., or any of its affiliates or agents shall not be liable for incidental or consequential damages of any kind. All Laird products are sold pursuant to the Laird Terms and Conditions of Sale in effect from time to time, a copy of

© Copyright 2017 Laird. All Rights Reserved

which will be furnished upon request. When used as a tradename herein, *Laird* means Laird PLC or one or more subsidiaries of Laird PLC. Laird™, Laird Technologies™, corresponding logos, and other marks are trademarks or registered trademarks of Laird. Other marks may be the property of third parties. Nothing herein provides a license under any Laird or any third party intellectual property right.

PRELIMINARY

© Copyright 2017 Laird. All Rights Reserved