Datasheet

LWB5+ M.2

Version 0.1

REVISION HISTORY

Version	Date	Notes	Contributor(s)	Approver
0.1	TBD	Initial preliminary version	Andrew Chen	Jay White

© Copyright 2020 Laird Connectivity, Inc.
All Rights Reserved
Americas: +1-800-492-2320
Europe: +44-1628-858-940
Hong Kong: +852 2923 0610

CONTENTS

1 Scope 4
2 Introduction 4
2.1 General Description 4
3 LWB5+ M.2 Module Features Summary 5
4 Specifications 5
5 WLAN Functional Description 10
5.1 Overview 10
6 Bluetooth Functional Description 12
7 Block Diagram 13
8 Electrical Characteristics 13
8.1 Absolute Maximum Ratings 13
8.2 Recommended Operating Conditions 14
8.3 DC Electrical Characteristics 14
8.4 WLAN Radio Receiver Characteristics 14
8.5 WLAN Transmitter Characteristics 15
9 Bluetooth Radio Characteristics 17
10 Host Interface Specifications 19
10.1 SDIO Specifications 19
10.2 PCM Interface Specifications 24
11 Pin Definitions 25
12 Mechanical Specifications 28
13 Mounting 29
14 RF Layout Design Guidelines 30
14.1 Recommended and Required Storage/Handling Conditions 31
15 Regulatory 32
15.1 Regulatory IDs Summary 32
15.2 Certified Antennas 32
15.3 FCC and IC Regulatory 32
15.4 FCC 33
15.5 ISED Canada 34
15.6 Japan (MIC) Regulatory 36
15.7 European Union 37
16 Ordering Information 39
16.1 General Comments 39
17 Bluetooth SIG Qualification 41
17.1 Overview 41
17.2 Qualification Steps When Referencing a Laird Controller Subsystem Design 41

© Copyright 2020 Laird Connectivity, Inc.
All Rights Reserved
Americas: +1-800-492-2320
Europe: +44-1628-858-940
Hong Kong: +852 2923 0610

1 SCOPE

This document describes key hardware aspects of the Laird LWB5-+ M.2 module providing either SDIO or USB2.0 interface for WLAN connection and UART/PCM, USB2.0/PCM for Bluetooth® connection. This document is intended to assist device manufacturers and related parties with the integration of this radio into their host devices. Data in this document is drawn from several sources and includes information found in the CYPRESS CYW4373EUBGT data sheet issued in July 2020, along with other documents provided from CYPRESS.

Note that the information in this document is subject to change. Please contact Laird to obtain the most recent version of this document.

2 INTRODUCTION

2.1 General Description

The LWB5+ M.2 module is an integrated, M.2 2230 E-Key standard factor, 1x1 SISO with T/R diversity, 802.11 a/b/g/n/ac WLAN plus *Bluetooth* 5.0 dual mode device that is optimized for low-power mobile devices. The integration of all WLAN and *Bluetooth* functionality in M.2 2230 E-Key standard factor supports low cost and simple implementation along with flexibility for platform-specific customization.

This device is pre-calibrated and integrates the complete transmit/receive RF paths including diplexer, switches, reference crystal oscillator and power manage units (PMU). There are two MHF4 connectors on the M.2 board, which can use certified antennas to support antenna diversity. For a lists of certified antennas, see section 16.2 in the datasheet.

The LWB5+ M.2 module supports IEEE 802.11ac 1x1 SISO with data rates up to MCS9 (433.3 Mbps). Internal Wi-Fi and BT coexistence scheme provides optimized throughput when Wi-Fi and BT are working simultaneously. The device's low power consumption radio architecture and power manage unit (PMU) proprietary power save technologies allow for extended battery life.

In addition, its dual 802.11 and Bluetooth radio includes full digital MAC and baseband engines that handle all 802.11 CCK/OFDM® 2.4/5GHz, and Bluetooth 5.0 (Basic Rate, Enhanced Data Rate and Bluetooth Low Energy) baseband and protocol processing.

Please contact Laird Sales/FAE for further information. Ordering information is listed in Table 1.

Table 1: Product ordering information

Order Model	Description
453-00048	802.11ac + Bluetooth 5.0 LWB5+ M.2 Module, SDIO (WLAN) / UART (Bluetooth)
453-00049	802.11ac + Bluetooth 5.0 LWB5+ M.2 Module, USB (WLAN) / USB (Bluetooth)
453-00048-K1	Development Kit for 1x1 802.11ac + Bluetooth 5.0 SDIO/UART M.2 Module
453-00049-K1	Development Kit for 1x1 802.11ac + Bluetooth 5.0 USB/USB M.2 Module

© Copyright 2020 Laird Connectivity, Inc.
All Rights Reserved
Americas: +1-800-492-2320
Europe: +44-1628-858-940
Hong Kong: +852 2923 0610

3 LWB5+ M.2 Module Features Summary

The Laird LWB5+ M.2 module features are described in Table 2.

Table 2: LWB5+ M.2 module features

Feature	Description
Radio Front End	Integrates the complete transmit/receive diversity RF paths including diplexer, switches, reference crystal oscillator, and power manage unit (PMU). Supports 20/40/80MHz channel bandwidth. WLAN/Bluetooth share one antenna.
The *Bluetooth*® word mark and logos are registered trademarks owned by Bluetooth SIG, Inc. Any use of such marks by Laird is under license. Other trademarks and trade names are those of their respective owners.	
Power Management	One Buck regulator, multiple LDO regulators, and a power management unit (PMU) are integrated into the CYW4373E. All regulators are programmable via the PMU. These blocks simplify power supply design for Bluetooth, and WLAN functions in embedded designs.
Pre-Calibration	RF system tested and calibrated in production
Sleep Clock	An external sleep clock of 32.768 KHz is required
Host Interface Options	The LWB5+ M.2 card provides two interfaces for customers to choose:- **1. SDIO 1.8V/UART**, Wi-Fi section provides support for SDIO v3.0 and also is backward compatible with SDIO v2.0. Bluetooth section supports a high-speed 4-wire UART interface. **2. USB/USB**, an on-chip USB 2.0 hub provides a shared single USB connection to both Wi-Fi and Bluetooth target devices.
Advanced WLAN	▪ IEEE 802.11ac compliant. ▪ Support for MCS8 VHT20 in 20 MHz channels for up to 86.7 Mbps data. ▪ Single-stream spatial multiplexing up to 433.3 Mbps data rate. ▪ Supports 20, 40, and 80 MHz channels with optional SGI (256 QAM modulation). ▪ Full IEEE 802.11a/b/g/n legacy compatibility with enhanced performance. ▪ TX and RX low-density parity check (LDPC) support for improved range and power efficiency. ▪ On-chip power amplifiers and low-noise amplifiers for both bands. ▪ Support wide variety of WLAN encryption: WEP/WPA/TKIP/WPA2 AES-CCMPs
Advanced Bluetooth	▪ Qualified for Bluetooth Core Specification 5.0 with all Bluetooth 4.2 optional features – QDID: – Declaration ID: ▪ Bluetooth Class 1 or Class 2 transmitter operation. ▪ Support data rate: 1 Mbps (GFSK), 2 Mbps (π/4-DQPSK), 3 Mbps (8-DPSK) ▪ Supports extended synchronous connections (eSCO), for enhanced voice quality by allowing for retransmission of dropped packets. ▪ Adaptive frequency hopping (AFH) for reducing radio frequency interference. ▪ Interface support, host controller interface (HCI) using a highspeed UART interface (or USB interface) and PCM for audio data. ▪ Low power consumption improves battery life of IoT and embedded devices. ▪ Supports multiple simultaneous Advanced Audio Distribution Profiles (A2DP) for stereo sound. ▪ Automatic frequency detection for standard crystal and TCXO values.

4 Specifications

Table 3: Specifications

Feature	Description
Physical Interface	M.2 2230 E-Key standard factor
Wi-Fi Interface	1-bit or 4-bit Secure Digital I/O; USB 2.0

© Copyright 2020 Laird Connectivity, Inc.
All Rights Reserved
Americas: +1-800-492-2320
Europe: +44-1628-858-940
Hong Kong: +852 2923 0610

Feature	Description
Bluetooth/BLE Interface	Host Controller Interface (HCI) using high speed UART, USB 2.0
Main Chip	Cypress CYW4373EUBGT
Input Voltage Requirements	Typical DC 3.3 V, operating range from DC 3.2V to 3.6V
I/O Signalling Voltage	Compliant with M.2 standard ▪ For the Key-E form factor, the SDIO, PCM, and UART interfaces only support 1.8V
Operating Temperature	-40° to 85°C (-40° to 185°F)
Operating Humidity	10 to 90% (non-condensing)
Storage Temperature	-40° to 85°C (-40° to 185°F)
Storage Humidity	10 to 90% (non-condensing)
Maximum Electrostatic Discharge	Conductive 4KV; Air coupled 8KV follow EN61000-4-2
Size	30 mm (length) x 22 mm (width) x 3.1 mm (thickness)
Weight	TBD g
Wi-Fi Media	Direct Sequence-Spread Spectrum (DSSS) Complementary Code Keying (CCK) Orthogonal Frequency Divisional Multiplexing (OFDM)
Bluetooth Media	Frequency Hopping Spread Spectrum (FHSS)
Wi-Fi Multimedia	WMM Wi-Fi Multimedia - PowerSave (WMM-PS with U-APSD) WMM-Sequential Access (WMM-SA with PCF)
Network Architecture Types	Infrastructure and ad-hoc
Wi-Fi Standards	IEEE 802.11a, 802.11b, 802.11e, 802.11g, 802.11h, 802.11i, 802.11k*, 802.11n, 802.11r, 802.11v*, 802.11ac
Bluetooth Standards	Bluetooth 5.0
Wi-Fi Data Rates Supported	Support 802.11 ac/a/b/g/n 1X1 SISO. 802.11b (DSSS, CCK) 1, 2, 5.5, 11 Mbps 802.11a/g (OFDM) 6, 9, 12, 18, 24, 36, 48, 54 Mbps 802.11n (OFDM, HT20/HT40, MCS 0-7) 802.11ac (OFDM, VHT20, MCS0-8; OFDM VHT40/VHT80, MCS0-9)
Modulation Table	BPSK, QPSK, CCK, 16-QAM, 64-QAM, and 256-QAM.

802.11ac 802.11n	HT MCS Index	VHT MCS Index	Spatial Streams	Modulation	Coding	20 MHz		40 MHz		80 MHz	
						No SGI	SGI	No SGI	SGI	No SGI	SGI
	0	0	1	BPSK	1/2	6.5	7.2	13.5	15	29.3	32.5
	1	1	1	QPSK	1/2	13	14.4	27	30	58.5	65
	2	2	1	QPSK	3/4	19.5	21.7	40.5	45	87.8	97.5
	3	3	1	16-QAM	1/2	26	28.9	54	60	117	130
	4	4	1	16-QAM	3/4	39	43.3	81	90	175.5	195
	5	5	1	64-QAM	2/3	52	57.8	108	120	234	260
	6	6	1	64-QAM	3/4	58.5	65	121.5	135	263.3	292.5
	7	7	1	64-QAM	5/6	65	72.2	135	150	292.5	325
		8	1	256-QAM	3/4	78	86.7	162	180	351	390

© Copyright 2020 Laird Connectivity, Inc.
All Rights Reserved
Americas: +1-800-492-2320
Europe: +44-1628-858-940
Hong Kong: +852 2923 0610

Feature	Description
	9 1 256-QAM 5/6 N/A N/A 180 200 390 **433.3**
802.11ac/n Spatial Streams	1 (1x1 SISO)
Bluetooth Data Rates Supported	1, 2, 3 Mbps
Bluetooth Modulation	GFSK@ 1 Mbps Pi/4-DQPSK@ 2 Mbps 8-DPSK@ 3 Mbps
Regulatory Certifications	USA (FCC) EU – members of European Union (ETSI) Canada Australia Japan
2.4 GHz Frequency Bands	**ETSI:** 2.4 GHz to 2.483 GHz **FCC/IC:** 2.4 GHz to 2.473 GHz **MIC:** 2.4 GHz to 2.495 GHz **RCM**: 2.4 GHz to 2.483 GHz
2.4 GHz Operating Channels (Wi-Fi)	**ETSI:** 13 (3 non-overlapping) **FCC/IC:** 11 (3 non-overlapping) **MIC:** 14 (4 non-overlapping) **RCM**: 13 (3 non-overlapping)
5 GHz Frequency Bands	**ETSI** 5.15 GHz to 5.35 GHz (Ch 36/40/44/48/52/56/60/64) 5.47 GHz to 5.725 GHz (Ch 100/104/108/112/116/120/124/128/132/136/140) 5.725 GHz to 5.85 GHz (Ch 149/153/157/161/165) **FCC** 5.15 GHz to 5.35 GHz (Ch 36/40/44/48/52/56/60/64) 5.47 GHz to 5.725 GHz (Ch 100/104/108/112/116/120/124/128/132/136/140/144 5.725 GHz to 5.85 GHz (Ch 149/153/157/161/165) **IC** 5.15 GHz to 5.35 GHz (Ch 36/40/44/48/52/56/60/64) 5.47 GHz to 5.725 GHz (Ch 100/104/108/112/116/132/136/140/144 5.725 GHz to 5.85 GHz (Ch 149/153/157/161/165) **MIC** 5.15 GHz to 5.35 GHz (Ch 36/40/44/48/52/56/60/64) 5.47 GHz to 5.725 GHz (Ch 100/104/108/112/116/120/124/128/132/136/140) **RCM** 5.15 GHz to 5.35 GHz (Ch 36/40/44/48/52/56/60/64) 5.47 GHz to 5.725 GHz (Ch 100/104/108/112/116/132/136/140 5.725 GHz to 5.85 GHz (Ch 149/153/157/161/165)
5 GHz Operating Channels (Wi-Fi)	ETSI: 24 non-overlapping; FCC: 25 non-overlapping IC: 22 non-overlapping; MIC: 19 non-overlapping RCM: 21 non-overlapping
Transmit Power ***Note:*** *Transmit power on each channel varies per individual country regulations. All values are*	**802.11a** 6 Mbps — 15 dBm (31.6 mW) 54 Mbps — 13 dBm (20 mW) **802.11b** 1 Mbps — 16 dBm (40 mW) 11 Mbps — 16 dBm (40 mW)

© Copyright 2020 Laird Connectivity, Inc.
All Rights Reserved
Americas: +1-800-492-2320
Europe: +44-1628-858-940
Hong Kong: +852 2923 0610

Feature	Description	
nominal with +/-2 dBm tolerance at room temperature. *Tolerance could be up to +/-2.5 dBm across operating temperature.* ***Note:*** *HT20 – 20 MHz-wide channels* *HT40 – 40 MHz-wide channels* *HT80 – 80 MHz-wide channels*	**802.11g**	
	6 Mbps	15.5 dBm (35.5 mW)
	48 Mbps, 54 Mbps	14.5 dBm (28.2 mW)
	802.11n (2.4 GHz)	
	HT20; MCS0-7	13.5 dBm (22.4 mW)
	HT40; MCS0-7	9.5 dBm (8.9 mW)
	802.11n (5 GHz)	
	HT20; MCS0-5	15 dBm (31.6 mW)
	HT20; MCS6-7	13 dBm (20 mW)
	HT40; MCS0-7	11 dBm (12.6 mW)
	802.11ac (5 GHz)	
	VHT20; MCS0-5	15 dBm (31.6 mW)
	VHT20; MCS6-7	13 dBm (20 mW)
	VHT20; MCS8	9.5 dBm (10 mW)
	VHT40; MCS0-7	11 dBm (12.6 mW)
	VHT40; MCS8-9	9.5 dBm (10 mW)
	VHT80; MCS0-7	10 dBm (10 mW)
	VHT80; MCS8-9	9 dBm (7.9 mW)
	Bluetooth	
	1 Mbps (1DH5)	7 dBm (5 mW)
	2 Mbps	4 dBm (2.5 mW)
	3 Mbps	4 dBm (2.5 mW)
	BLE (1 Mbps)	7 dBm (5 mW)
Typical Receiver Sensitivity (PER <= 10%) ***Note:*** *All values nominal, +/-3 dBm.*	**802.11a:**	
	6 Mbps	-89 dBm
	54 Mbps	-73 dBm
	802.11b:	
	1 Mbps	-95 dBm (PER < 8%)
	11 Mbps	-88 dBm (PER < 8%)
	802.11g:	
	6 Mbps	-92 dBm
	54 Mbps	-75 dBm
	802.11n (2.4 GHz)	
	6.5 Mbps (MCS0; HT20)	-92 dBm
	65 Mbps (MCS7; HT20)	-73 dBm
	13.5 Mbps (MCS0; HT40)	-89 dBm
	135 Mbps (MCS7; HT40)	-70 dBm
	802.11n (5 GHz)	
	6.5 Mbps (MCS0; HT20)	-89 dBm
	65 Mbps (MCS7; HT20)	-70 dBm
	13.5Mbps (MCS0; HT40)	-86 dBm
	135Mbps (MCS7; HT40)	-66 dBm
	802.11ac (5 GHz)	
	6.5 Mbps (MCS0; VHT20)	-88 dBm
	78 Mbps (MCS8; VHT20)	-66 dBm
	13.5 Mbps (MCS0; VHT40)	-86 dBm
	180 Mbps (MCS9; VHT40)	-62 dBm
	29.3 Mbps (MCS0; VHT80)	-83 dBm
	390 Mbps (MCS9; VHT80)	-59 dBm

© Copyright 2020 Laird Connectivity, Inc.
All Rights Reserved
Americas: +1-800-492-2320
Europe: +44-1628-858-940
Hong Kong: +852 2923 0610

Feature	Description
	Bluetooth: 1 Mbps (1DH5) -90 dBm 2 Mbps (2DH5) -92 dBm 3 Mbps (3DH5) -86 dBm Bluetooth LE -93 dBm
Operating Systems Supported	Linux Android
Security	▪ WEP ▪ WPA and WPA2 (Personal) support for powerful encryption and authentication. ▪ AES and TKIP in hardware for faster data encryption and IEEE 802.11i compatibility. ▪ Reference WLAN subsystem provides Wi-Fi Protected Setup (WPS). ▪ CKIP
Compliance	**ETSI Regulatory Domain** EN 300 328 EN 301 489-1 EN 301 489-17 EN 301 893 EN 60950-1 2011/65/EU (RoHS) **FCC Regulatory Domain** FCC 15.247 DTS – 802.11b/g (Wi-Fi) – 2.4 GHz FCC 15.407 UNII – 802.11a (Wi-Fi) – 5 GHz FCC 15.247 DSS – BT 2.1 **Industry Canada** RSS-247 – 802.11a/b/g/n (Wi-Fi) – 2.4 GHz, 5.8 GHz, 5.2 GHz, and 5.4 GHz RSS-247 – BT 2.1 **RCM** AS/NZS 4268 :2017 AS/NZS 4268 DFS **MIC** Japan ARIB STD-T66/-33/-T71
Certifications ***Note:*** *These regulatory certifications are pending.*	***Bluetooth*® SIG Qualification**
Warranty	One Year Warranty
	All specifications are subject to change without notice

© Copyright 2020 Laird Connectivity, Inc.
All Rights Reserved
Americas: +1-800-492-2320
Europe: +44-1628-858-940
Hong Kong: +852 2923 0610

5 WLAN Functional Description

5.1 Overview

The LWB5+ M.2 module is designed based on the CYPRESS CYW4373EUBGT 802.11ac/a/b/g/n chipset. It is optimized for high speed, reliable, and low-power embedded applications. It's integrated with dual-band WLAN (2.4/5GHz) and Bluetooth 5.0. Its functionality includes:

- Improved throughput on the link due to frame aggregation, RIFS (reduced inter-frame spacing), and half guard intervals.
- Support for LDPC (Low Density Parity Check) codes.
- Improved 11n performance due to features such as 11n frame aggregation (TX A-MPDU) and low-overhead host-assisted buffering (RX A-MPDU). These techniques can improve performance and efficiency of applications involving large bulk data transfers such as file transfers or high-resolution video streaming.
- IEEE 802.11ac, 1x1 SISO with data rate up to MCS9 (433.3Mbps).

Additional functionality is listed in the following table (Table 4).

Table 4: WLAN functions

Feature	Description
WLAN MAC	▪ Enhanced MAC for supporting IEEE 802.11ac features ▪ Transmission and reception of aggregated MPDUs (A-MPDUs) for very high throughput (VHT) ▪ Support for power management schemes, including WMM power-save, power-save multi-poll (PSMP) and multiphase PSMP operation ▪ Support for immediate ACK and Block-ACK policies ▪ Interframe space timing support, including RIFS ▪ Support for RTS/CTS and CTS-to-self frame sequences for protecting frame exchanges ▪ Back-off counters in hardware for supporting multiple priorities as specified in the WMM specification ▪ Timing synchronization function (TSF), network allocation vector (NAV) maintenance, and target beacon transmission time (TBTT) ▪ generation in hardware and capturing the TSF timer on an external time synchronization pulse ▪ Hardware offload for AES-CCMP, legacy WPA TKIP, legacy WEP ciphers, WAPI, and support for key management ▪ Support for coexistence with Bluetooth and other external radios ▪ Programmable independent basic service set (IBSS) or infrastructure basic service set functionality ▪ Statistics counters for MIB support
WLAN Security	▪ WLAN Encryption features supported include: – Temporal Key Integrity Protocol (TKIP)/Wired Equivalent Privacy (WEP) – Advanced Encryption Standard (AES)/Counter-Mode/CBC-MAC Protocol (CCMP) – WLAN Authentication and Private Infrastructure (WPAI)

© Copyright 2020 Laird Connectivity, Inc.
All Rights Reserved
Americas: +1-800-492-2320
Europe: +44-1628-858-940
Hong Kong: +852 2923 0610

Feature	Description
WLAN Channel	Channel frequency supported.

20 MHz				40 MHz		80 MHz	
Channel	**Freq. (MHz)**	**Channel**	**Freq. (MHz)**	**Channel**	**Freq. (MHz)**	**Channel**	**Freq. (MHz)**
1	2412	36	5180	1-5	2422	42	5210
2	2417	40	5200	2-6	2427	58	5290
3	2422	44	5220	3-7	2432	74	5370
4	2427	48	5240	4-8	2437	90	5410
5	2432	52	5260	5-9	2422	106	5530
6	2437	56	5280	6-10	2447	122	5610
7	2422	60	5300	7-11	2452	138	5690
8	2447	64	5320	36-40	5190	155	5775
9	2452	100	5500	44-48	5230		
10	2457	104	5520	52-56	5270		
11	2462	108	5540	60-64	5310		
12	2467	112	5560	68-72	5350		
13	2472	116	5580	76-80	5390		
		120	5600	84-88	5430		
		124	5620	92-96	5470		
		128	5640	100-104	5510		
		132	5660	108-112	5550		
		136	5680	116-120	5590		
		140	5700	124-128	5630		
		144	5720	132-136	5670		
		149	5745	140-144	5710		
		153	5765	149-153	5755		
		157	5785	157-161	5795		
		161	5805				
		165	5825				

© Copyright 2020 Laird Connectivity, Inc.
All Rights Reserved
Americas: +1-800-492-2320
Europe: +44-1628-858-940
Hong Kong: +852 2923 0610

6 Bluetooth Functional Description

The LWB5+ M.2 module includes a fully-integrated Bluetooth baseband/radio. Several features and functions are listed in Table 5.

Table 5: Bluetooth functions

Feature	Description
Bluetooth Interface	▪ Voice interface: – Hardware support for continual PCM data transmission/reception without processor overhead. – Standard PCM clock rates from 64 kHz to 2.048 MHz with multi-slot handshake and synchronization. – A-law, U-law, and linear voice PCM encoding/decoding. ▪ High-Speed UART interface ▪ USB 2.0
Bluetooth Core functionality	▪ Bluetooth 5.0 Core Spec (errata) ▪ Bluetooth Class 2/Bluetooth class 1 ▪ WLAN and Bluetooth share same LNA and antenna ▪ Digital audio interfaces with TDM interface for voice application ▪ Baseband and radio BDR and EDR package type: 1 Mbps, 2 Mbps, 3 Mbps ▪ Fully functional Bluetooth baseband: AFH, forward error correction, header error control, access code correction, CRC, encryption bit stream generation, and whitening. ▪ Adaptive Frequency Hopping (AFH) using Packet Error Rate (PER) ▪ Interlaced scan for faster connection setup ▪ Simultaneous active ACL connection setup ▪ Automatic ACL package type selection ▪ Full master and slave piconet support ▪ Scatter net support ▪ SCO/eSCO links with hardware accelerated audio signal processing and hardware supported PPEC algorithm for speech quality improvement ▪ All standard SCO/eSCO voice coding ▪ All standard pairing, authentication, link key, and encryption operations ▪ Encryption (AES) support
Bluetooth Low Energy (BLE) Core functionality	▪ Bluetooth 5.0 Core Spec (Errata) ▪ Bluetooth 4.2 Features: ○ LE privacy 1.2 ○ LE Secure Connection. ○ LE Data Length Extension ▪ Bluetooth 4.0 Features: ○ Advertiser, Scanner, Initiator, Master, and Slave roles support (connects to 16 links) ○ WLAN/Bluetooth Coexistence (BCA) protocol support. ○ Shared RF with BDR/EDR ○ Encryption (AES) support. ○ Intelligent Adaptive Frequency Hopping (AFH)

© Copyright 2020 Laird Connectivity, Inc.
All Rights Reserved
Americas: +1-800-492-2320
Europe: +44-1628-858-940
Hong Kong: +852 2923 0610

7 Block Diagram

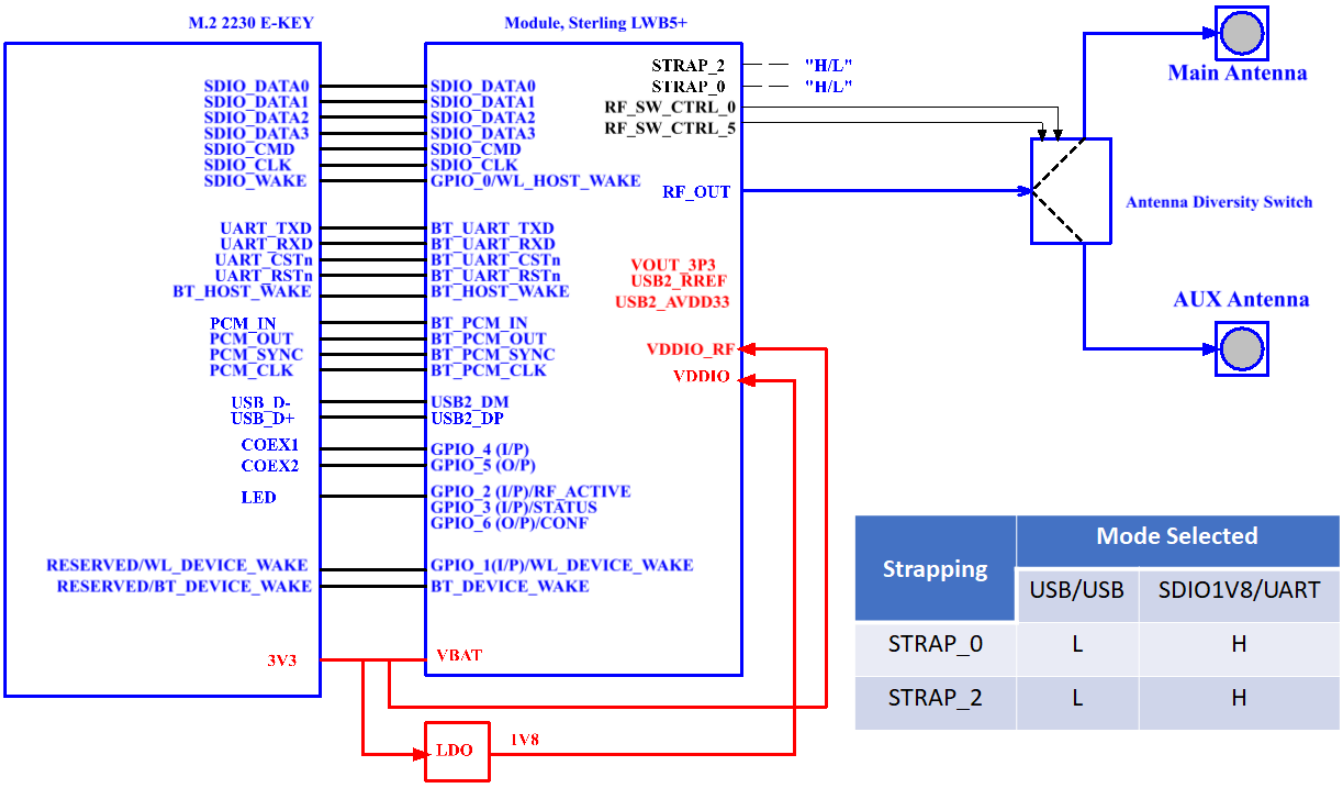

Strapping	Mode Selected	
	USB/USB	SDIO1V8/UART
STRAP_0	L	H
STRAP_2	L	H

Figure 1: Block diagram

8 Electrical Characteristics

8.1 Absolute Maximum Ratings

Table 6 summarizes the absolute maximum ratings and Table 7 lists the recommended operating conditions for the LWB5+ M.2 module. Absolute maximum ratings are those values beyond which damage to the device can occur. Functional operation under these conditions, or at any other condition beyond those indicated in the operational sections of this document, is not recommended.

Note: Maximum rating for signals follows the supply domain of the signals.

Table 6: Absolute maximum ratings

Symbol (Domain)	Parameter	Max Rating	Unit
3V3	External 3.3V power supply	4.0	V
Storage	Storage Temperature	-40 to +85	°C
Antenna	Maximum RF input (reference to 50-Ω input)	+10	dBm
ESD	Electrostatic discharge tolerance	2000	V

© Copyright 2020 Laird Connectivity, Inc.
All Rights Reserved
Americas: +1-800-492-2320
Europe: +44-1628-858-940
Hong Kong: +852 2923 0610

8.2 Recommended Operating Conditions

Table 7: Recommended Operating Conditions

Symbol (Domain)	Parameter	Min	Typ	Max	Unit
3V3	External 3.3V power supply	3.2	3.30	3.6	V
T-ambient	Ambient temperature	-40	25	85	°C

8.3 DC Electrical Characteristics

Table 8 list the general DC electrical characteristics over recommended operating conditions (unless otherwise specified).

Table 8: General DC electrical characteristics (For 1.8V operation VDDIO; VIO_SD)

Symbol	Parameter	Conditions	Min	Typ	Max	Unit
VIH	High Level Input Voltage	—	1.17	—	—	V
VIL	Low Level Input Voltage	—	—	—	0.63	V
VOH	Output high Voltage	—	1.35	—	—	V
VOL	Output low Voltage	—	—	—	0.45	V

8.4 WLAN Radio Receiver Characteristics

Table 9 and Table 10 summarize the LWB5+ M.2 module receiver characteristics.

Table 9: WLAN receiver characteristics for 2.4 GHz

Symbol	Parameter	Min	Typ	Max	Unit
Frx	Receive input frequency range	2.412	—	2.484	GHz
Srf					
	CCK, 1 Mbps	—	-95	—	dBm
	CCK, 11 Mbps	—	-88	—	
	OFDM, 6 Mbps	—	-92	—	
	OFDM, 54 Mbps	—	-75	—	
	HT20, MCS0	—	-92	—	
	HT20, MCS7	—	-73	—	
	HT40, MCS0	—	-89	—	
	HT40, MCS7	—	-70	—	
Radj					
	OFDM, 6 Mbps	16	38	—	dB
	OFDM, 54 Mbps	-1	20.4	—	
	HT20, MCS0	16	33.3	—	
	HT20, MCS7	-2	13.7	—	

Table 10: WLAN Receiver Characteristics for 5 GHz

Symbol	Parameter	Min	Typ	Max	Unit
Frx	Receive input frequency range	5.15	—	5.825	GHz
Srf					
	OFDM, 6 Mbps	—	-89	—	dBm

© Copyright 2020 Laird Connectivity, Inc.
All Rights Reserved
Americas: +1-800-492-2320
Europe: +44-1628-858-940
Hong Kong: +852 2923 0610

Symbol	Parameter	Min	Typ	Max	Unit
	OFDM, 54 Mbps	—	-73	—	
	HT20, MCS0	—	-89	—	
	HT20, MCS7	—	-70	—	
	HT40, MCS0	—	-86	—	
	HT40, MCS7	—	-66	—	
	VHT20, MCS0	—	-88	—	
	VHT20, MCS8	—	-66	—	
	VHT40, MCS0	—	-86	—	
	VHT40, MCS9	—	-62	—	
	VHT80, MCS0	—	-83	—	
	VHT80, MCS9	—	-59	—	
Radj (Difference between interfering and desired signal (20 MHz apart))					
	OFDM, 6 Mbps	16	31.7	—	dB
	OFDM, 54 Mbps	-1	13.8	—	
	OFDM, 65 Mbps	-2	8.4	—	
Radj. (Difference between interfering and desired signal (40 MHz apart))	OFDM, 6 Mbps	32	44.7	—	dB
	OFDM, 54 Mbps	15	26.6	—	
	OFDM, 65 Mbps	14	26.8	—	

8.5 WLAN Transmitter Characteristics

Table 11: WLAN transmitter characteristics for 2.4 GHz operation (SDIO=VDIO=1.8V)

Symbol	Parameter	Conditions	Min	Typ	Max	Unit
Ftx	Transmit output frequency range	—	2.412	—	2.484	GHz
Pout	11b mask compliant	1-11 Mbps	—	18	—	dBm
	11g mask compliant	6-36 Mbps	—	17.5	—	
	11g EVM compliant	48-54 Mbps	—	16.5	—	
	11n HT20 mask compliant	MCS 0-5	—	15.5	—	
	11n HT20 EVM compliant	MCS 6-7	—	15.5	—	
	11n HT40 mask compliant	MCS 0-5	—	11.5	—	
	11n HT40 EVM compliant	MCS 6-7	—	11.5	—	
ATx	Transmit power accuracy at 25 ℃	—	-2.0	—	+2.0	dB

Freq.	Mode/Rate (Mbps)	Output Power (dBm)	Maximum Current Consumption (mA)
2412MHz	1 Mbps	18 dBm	390
	11 Mbps	18 dBm	406
	6 Mbps	17.5 dBm	406
	54 Mbps	16.5 dBm	364

© Copyright 2020 Laird Connectivity, Inc.
All Rights Reserved
Americas: +1-800-492-2320
Europe: +44-1628-858-940
Hong Kong: +852 2923 0610

Freq.	Mode/Rate (Mbps)	Output Power (dBm)	Maximum Current Consumption (mA)
	HT20 MCS 0	15.5 dBm	361
	HT20 MCS 7	15.5 dBm	339
	HT40 MCS 0	11.5 dBm	324
	HT40 MCS 7	11.5 dBm	298
2442MHz	1 Mbps	18 dBm	390
	11 Mbps	18 dBm	406
	6 Mbps	17.5 dBm	406
	54 Mbps	16.5 dBm	364
	HT20 MCS 0	15.5 dBm	361
	HT20 MCS 7	15.5 dBm	339
	HT40 MCS 0	11.5 dBm	324
	HT40 MCS 7	11.5 dBm	298
2472MHz	1 Mbps	18 dBm	390
	11 Mbps	18 dBm	406
	6 Mbps	17.5 dBm	406
	54 Mbps	16.5 dBm	364
	HT20 MCS 0	15.5 dBm	361
	HT20 MCS 7	15.5 dBm	339
	HT40 MCS 0	11.5 dBm	324
	HT40 MCS 7	11.5 dBm	298

Table 12: WLAN transmitter characteristics for 5 GHz operation (SDIO=VDIO=1.8V)

Symbol	Parameter	Conditions	Min	Typ	Max	Unit
Ftx	Transmit output frequency range	—	5.15	—	5.925	GHz
Pout	Output power	See Note[2]	—	—	—	—
	11a mask compliant	6-48 Mbps	—	17	—	dBm
	11a EVM compliant	54 Mbps	—	15	—	
	11n HT20 mask compliant	MCS 0-5	—	17	—	
	11n HT20 EVM compliant	MCS 6-7	—	15	—	
	11n HT40 mask compliant	MCS 0-5	—	13	—	
	11n HT40 EVM compliant	MCS 6-7	—	13	—	
	11ac VHT20 mask compliant	MCS 0-5	—	17	—	
	11ac VHT20 EVM compliant	MCS 6-7	—	15	—	
	11ac VHT20 EVM compliant	MCS 8	—	11.5	—	
	11ac VHT40 mask compliant	MCS 0-5	—	13	—	
	11ac VHT40 EVM compliant	MCS 6-7	—	13	—	
	11ac VHT40 EVM compliant	MCS 8-9	—	11.5	—	
	11ac VHT80 mask compliant	MCS 0-5	—	12	—	

© Copyright 2020 Laird Connectivity, Inc.
All Rights Reserved
Americas: +1-800-492-2320
Europe: +44-1628-858-940
Hong Kong: +852 2923 0610

Symbol	Parameter	Conditions	Min	Typ	Max	Unit
	11ac VHT80 EVM compliant	MCS 6-7	—	12	—	
	11ac VHT80 EVM compliant	MCS 8-9	—	11	—	
ATx	Transmit power accuracy at 25 ℃	—	-2.0	—	+2.0	dB

Table 13: WLAN current consumption on 5 GHz (SDIO=VDIO=1.8V)

Freq.	Mode/Rate [Mbps]	Output Power Per Chain [dBm]	Maximum Current Consumption (mA)
5180 MHz	6 Mbps	17 dBm	378
	54 Mbps	15 dBm	341
	HT20 MCS 0	17 dBm	382
	HT20 MCS 7	15 dBm	352
5190 MHz	HT40 MCS 0	13 dBm	367
	HT40 MCS 7	13 dBm	354
	VHT80 MCS 0	12 dBm	391
5210 MHz	VHT80 MCS 9	11 dBm	339
5500 MHz	6 Mbps	17 dBm	378
	54 Mbps	15 dBm	341
	HT20 MCS 0	17 dBm	382
	HT20 MCS 7	15 dBm	352
5510 MHz	HT40 MCS 0	13 dBm	367
	HT40 MCS 7	13 dBm	354
	VHT80 MCS 0	12 dBm	391
5530 MHz	VHT80 MCS 9	11 dBm	339
	6 Mbps	17 dBm	378
5825 MHz	54 Mbps	15 dBm	341
	HT20 MCS 0	17 dBm	382
	HT20 MCS 7	15 dBm	352
5795 MHz	HT40 MCS 0	13 dBm	367
	HT40 MCS 0	13 dBm	354
5775 MHz	VHT80 MCS 0	12 dBm	391
	VHT80 MCS 9	11 dBm	339

Note: Final TX power values on each channel are limited by regulatory requirements

9 Bluetooth Radio Characteristics

Table 14 through Table 16 describe the basic rate transmitter performance, basic rate receiver performance, enhanced rate receiver performance, and current consumption conditions at 25°C.

Table 14: Basic rate transmitter performance temperature at 25°C (3.3V)

Test Parameter		Min	Typ	Max	BT Spec.	Unit
Maximum RF Output Power	GFSK	—	—	7	0 ~ +20	dBm

© Copyright 2020 Laird Connectivity, Inc.
All Rights Reserved
Americas: +1-800-492-2320
Europe: +44-1628-858-940
Hong Kong: +852 2923 0610

Test Parameter		Min	Typ	Max	BT Spec.	Unit
	π/4-DQPSK	—	4	—		
	8-DPSK	—	4	—		
Frequency Range		2.4	—	2.4835	2.4 ≤ f ≤ 2.4835	GHz
20 dB Bandwidth		—	919.5	—	≤ 1000	KHz
Δf1avg Maximum Modulation		140	155	175	140 < Δf1avg < 175	KHz
Δf2max Minimum Modulation		115	135	—	≥ 115	KHz
Δf2avg/Δf1avg		—	0.9	—	≥ 0.80	—
Initial Carrier Frequency		—	± 25	± 75	≤ ± 75	KHz
Frequency Drift (DH1 packet)		—	± 10	± 25	± 25	KHz
Frequency Drift (DH3 packet)		—	± 10	± 40	± 40	KHz
Frequency Drift (DH5 packet)		—	± 10	± 40	± 40	KHz
Drift rate		—	8	20	20	KHz/50us
Adjacent Channel Power	F ≥ ± 3 MHz	—	-50	—	< -40	dBm
	F = ± 2 MHz	—	-46	—	≤ -20	dBm
	F = ± 1 MHz	—	-15	—	N/A	dBm

Table 15: Basic rate receiver performance at 3.3V

Test Parameter		Min	Typ	Max	BT Spec.	Unit
Sensitivity (1DH5)	BER ≤ 0.1%	—	-90	—	≤ -70	dBm
Maximum Input	BER ≤ 0.1%	—	—	-20	≥ -20	dBm
Interference Performance	Co-Channel	—	9	11	11	dB
	C/I 1 MHz adjacent channel	—	-5.5	0	0	dB
	C/I 2 MHz adjacent channel	—	-38	-30	-30	dB
	C/I ≥ 3 MHz adjacent channel	—	-46	-40	-40	dB
	C/I image channel	—	-25.5	-9	-9	dB
	C/I 1-MHz adjacent to image channel	—	-39	-20	-20	dB

Table 16: Enhanced data rate receiver performance (3.3V)

Test Parameter		Min	Typ	Max	BT Spec.	Unit
Sensitivity (BER ≤ 0.01%)	π/4-DQPSK	—	-92	—	≤ -70	dBm
	8-DPSK	—	-86	—	≤ -70	dBm
Maximum Input (BER ≤ 0.1%)	π/4-DQPSK	—	—	-20	≥ -20	dBm
	8-DPSK	—	—	-20	≥ -20	dBm
C/I Co-Channel (BER ≤ 0.1%)	π/4-DQPSK	—	10.5	13	≤ ±13	dB
	8-DPSK	—	17.5	21	≤ ±21	dB
C/I 1 MHz adjacent Channel	π/4-DQPSK	—	-6	0	≤ 0	dB
	8-DPSK	—	-3	5	≤5	dB
C/I 2 MHz adjacent Channel	π/4-DQPSK	—	-38.5	-30	≤ -30	dB
	8-DPSK	—	-37.5	-25	≤ -25	dB
C/I ≥ 3 MHz adjacent Channel	π/4-DQPSK	—	-47	-40	≤ -40	dB

© Copyright 2020 Laird Connectivity, Inc.
All Rights Reserved
Americas: +1-800-492-2320
Europe: +44-1628-858-940
Hong Kong: +852 2923 0610

Test Parameter		Min	Typ	Max	BT Spec.	Unit
	8-DPSK	—	-39.5	-33	≤ -33	dB
C/I image channel	π/4-DQPSK	—	-24.5	-7	≤ -7	dB
	8-DPSK	—	-17	0	≤ 0	dB
C/I 1 MHz adjacent to image channel	π/4-DQPSK	—	-43	-20	≤ -20	dB
	8-DPSK	—	-37	-13	≤ -13	dB
Out-of-Band Blocking Performance (CW) BER ≤ 0.1%	30-2000MHz	—	-10	—	—	dBm
	2-2.399GHz	—	-27	—	—	dBm
	2.484-3GHz	—	-27	—	—	dBm
	3-12.75GHz	—	-10	—	—	dBm

Table 17: BLE RF Specifications (3.3V)

Parameter	Conditions	Min	Typ	Max	Unit
Frequency range	—	2402	—	2480	MHz
Rx sensitivity[3]	GFSK, 30.8% PER, 1Mbps	—	-93	—	dBm
Tx power[4]	—	—	—	7	dBm
Δf1 average	—	225	255	275	KHz
Δf2 maximum[5]	—	185	220	—	KHz
$\frac{\Delta f2\ avg}{\Delta f1\ avg}$ ratio	—	0.8	0.95	—	—

Notes

[3] Dirty Tx is Off.

[4] The BLE TX power cannot exceed 10 dBm EIRP specification limit. The front-end losses and antenna gain/loss must be factored in so as not to exceed the limit.

[5] At least 99.9% of all Δf2 maximum frequency values recorded over 10 packets must be greater than 185 KHz.

10 Host Interface Specifications

10.1 SDIO Specifications

The LWB5+ M.2 module SDIO host interface pins are powered from the VIO_SD voltage supply, which is set internally at 1.8V on the M.2 module. The SDIO electrical specifications are identical for the 1-bit SDIO and 4-bit SDIO modes. Note – The SDIO host signals must be 1.8v at all times as defined by the M.2 standard.

© Copyright 2020 Laird Connectivity, Inc.
All Rights Reserved
Americas: +1-800-492-2320
Europe: +44-1628-858-940
Hong Kong: +852 2923 0610

10.1.1 Default Speed, High-speed Modes

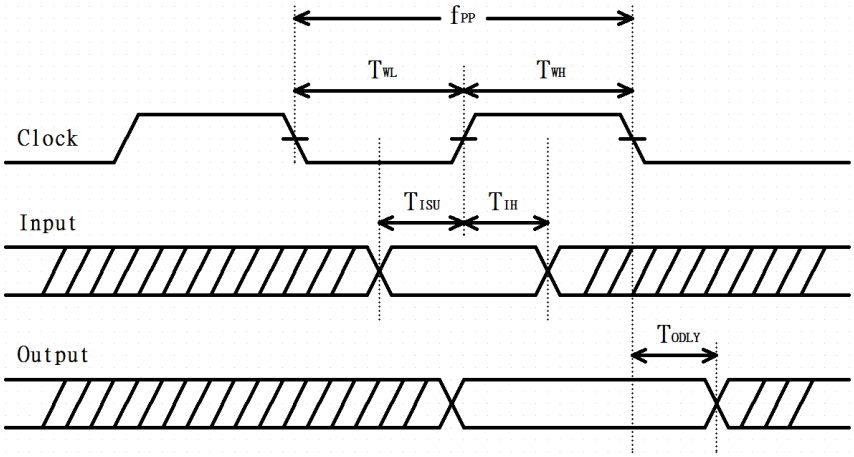

Figure 2: SDIO protocol timing diagram--- default mode (1.8V)

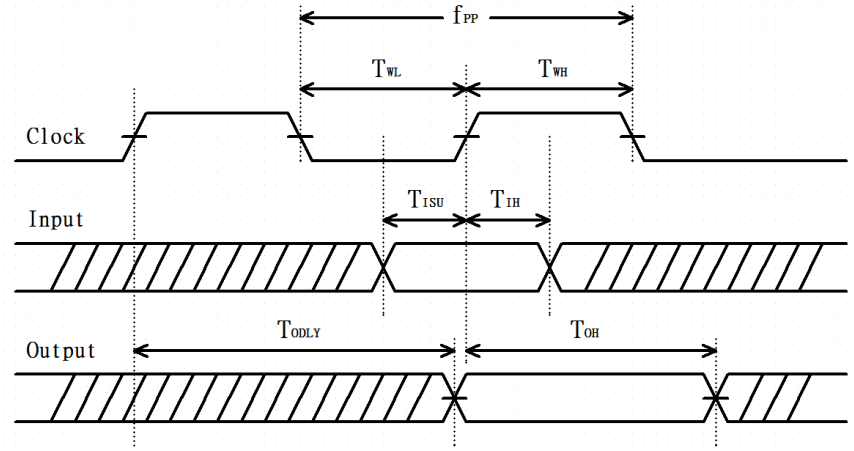

Figure 3: SDIO protocol timing diagram--- High-Speed mode (1.8V)

Note: Over full range of values specified in the Recommended Operating Conditions unless otherwise specified.

Table 18: SDIO timing requirements

Symbol	Parameter	Condition	Min.	Typ.	Max.	Unit
fPP	Clock Frequency	Default Speed High-Speed	0 0	- -	25 50	MHz
TWL	Clock low time	Default Speed High-Speed	10 7	- -	- -	ns
TWH	Clock high time	Default Speed High-Speed	10 7	- -	- -	ns
TISU	Input Setup time	Default Speed High-Speed	5 6	- -	- -	ns
TIH	Input Hold time	Default Speed High-Speed	5 2	- -	- -	ns

© Copyright 2020 Laird Connectivity, Inc.
All Rights Reserved
Americas: +1-800-492-2320
Europe: +44-1628-858-940
Hong Kong: +852 2923 0610

Symbol	Parameter	Condition	Min.	Typ.	Max.	Unit
TODLY	Output delay time CL≦40pF (1 card)	Default Speed High-Speed	- -	- -	14 14	ns
TOH	Output hold time	High-Speed	0	-	-	ns

10.1.2 SDR12, SDR25, SDR50 Mode (up to 100MHz) (1.8V)

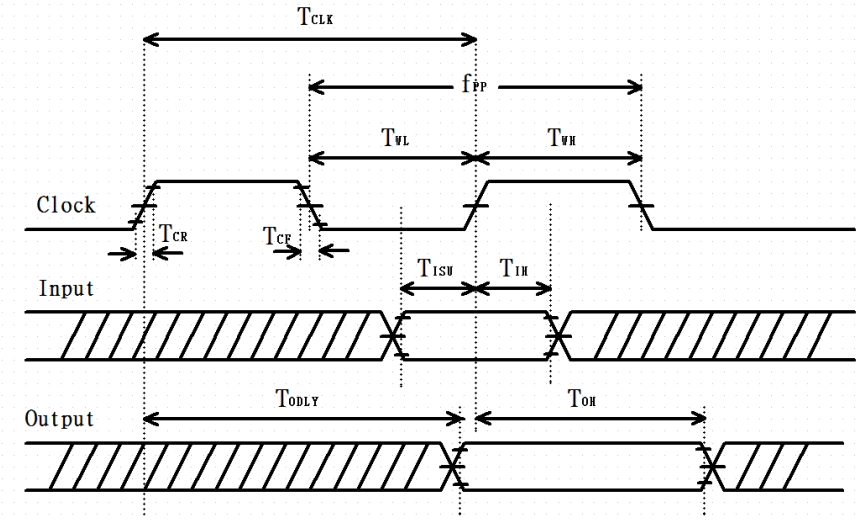

Figure 4: SDIO protocol timing Diagram--- SDR12, SDR25, SDR50 modes (up to 100 MHz) (1.8V)

Note: Over full range of values specified in the Recommended Operating Conditions unless otherwise specified.

Table 19: SDIO timing requirements--- SDR12, SDR25, SDR50 modes (up to 100 MHz) (1.8V)

Symbol	Parameter	Condition	Min.	Typ.	Max.	Unit
fPP	Clock Frequency	SDR12/25/50	25	-	100	MHz
TISU	Input setup time	SDR12/25/50	3	--	-	ns
TIH	Input Hold time	SDR12/25/50	0.8	-	-	ns
TCLK	Clock Time	SDR12/25/50	10	-	40	ns
TCR, TCF	Raise time, Fall time TCR, TCF <2ns (max) at 100MHz CCARD=10pF	SDR12/25/50	-	-	0.2*TCLK	ns
TODLY	Output delay time CL≦30pF	SDR12/25/50	-	-	7.5	ns
TOH	Output hold time CL=15pF	SDR12/25/50	1.5	-	-	ns

© Copyright 2020 Laird Connectivity, Inc.
All Rights Reserved
Americas: +1-800-492-2320
Europe: +44-1628-858-940
Hong Kong: +852 2923 0610

10.1.3 SDR104 Mode (208 MHz) (1.8V)

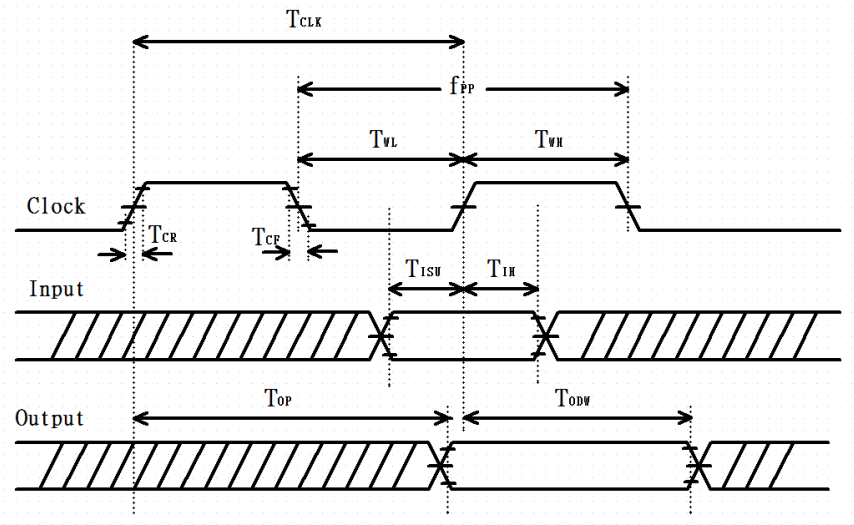

Figure 5: SDIO protocol timing Diagram--- SDR104 modes (up to 208 MHz) (1.8V)

Note: Over full range of values specified in the Recommended Operating Conditions unless otherwise specified.

Table 20: SDIO timing requirements--- SDR104 modes (up to 208MHz) (1.8V)

Symbol	Parameter	Condition	Min.	Typ.	Max.	Unit
fPP	Clock Frequency	SDR104	0	-	208	MHz
TISU	Input setup time	SDR104	1.4	--	-	ns
TIH	Input Hold time	SDR104	0.8	-	-	ns
TCLK	Clock Time	SDR104	4.8	-	-	ns
TCR, TCF	Raise time, Fall time TCR, TCF <0.96ns (max) at 208MHz CCARD=10pF	SDR104	-	-	0.2*TCLK	ns
TOP	Card Output phase	SDR104	0	-	10	ns
TODW	Output timing pf variable data window	SDR12/25/50	2.88	-	-	ns

© Copyright 2020 Laird Connectivity, Inc.
All Rights Reserved
Americas: +1-800-492-2320
Europe: +44-1628-858-940
Hong Kong: +852 2923 0610

10.1.4 SDR50 Mode (50MHz) (1.8V)

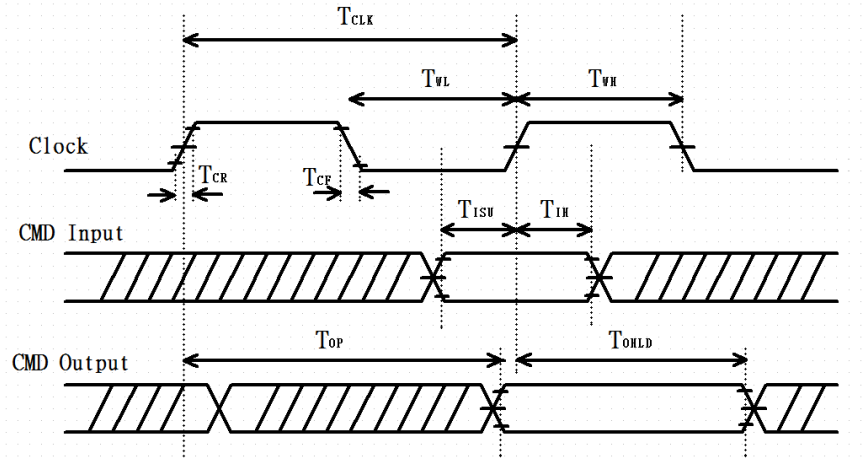

Figure 6: SDIO CMD timing diagram--- SDR50 modes (50 MHz) (1.8V)

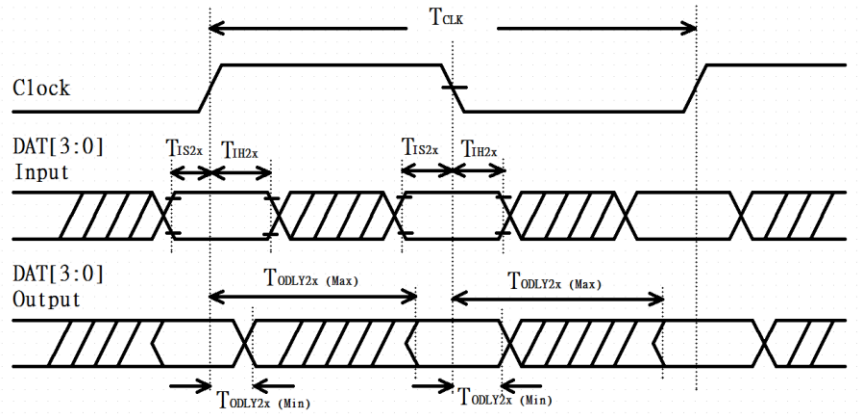

Figure 7: SDIO DAT[3:0] timing Diagram--- SDR50 modes (50 MHz) (1.8V)

Note: In SDR50 mode, DAT[3:0] lines are samples on both edges pf the clock (not applicable for CMD line)

Table 21: SDIO timing requirements – SDR50 modes (50 MHz)

Symbol	Parameter	Condition	Min.	Typ.	Max.	Unit
Clock						
TCLK	Clock time 50MHz (max) between rising edge	SDR50	20	--	--	ns
TCR, TCF	Rise time, fall time TCR, TCF <4.00ns (max) at 50MHz. CCARD=10pF	SDR50	--	--	0.2*TCLK	ns
Clock Duty	--	SDR50	45	--	55	%
CMD Input (referenced to clock rising edge)						
TIS	Input setup time CCARD≦10pF (1 card)	SDR50	6	--	--	ns
TIH	Input hold time CCARD≦10pF (1 card)	SDR50	0.8	--	--	ns

© Copyright 2020 Laird Connectivity, Inc.
All Rights Reserved
Americas: +1-800-492-2320
Europe: +44-1628-858-940
Hong Kong: +852 2923 0610

Symbol	Parameter	Condition	Min.	Typ.	Max.	Unit
CMD Output (referenced to clock rising and failing edge)						
TODLY	Output delay time during data transfer mode CL≦30pF (1 card)	SDR50	--	--	13.7	ns
TOHLD	Output hold time CL≥15pF (1 card)	SDR50	1.5	--	--	ns
DAT[3:0] Input (referenced to clock rising and failing edges)						
TIS2X	Input setup time CCARD≦10pF (1 card)	SDR50	3	--	--	ns
TIH2X	Input hold time CCARD≦10pF (1 card)	SDR50	0.8	--	--	ns
DAT[3:0] Output (referenced to clock rising and failing edges)						
TODLY2X (max)	Output delay time during data transfer mode CL≦25pF (1 card)	SDR50	--	--	7.0	ns
TODLY2X (min)	Output hold time CL≥15pF (1 card))	SDR50	1.5	--	--	ns

10.2 PCM Interface Specifications

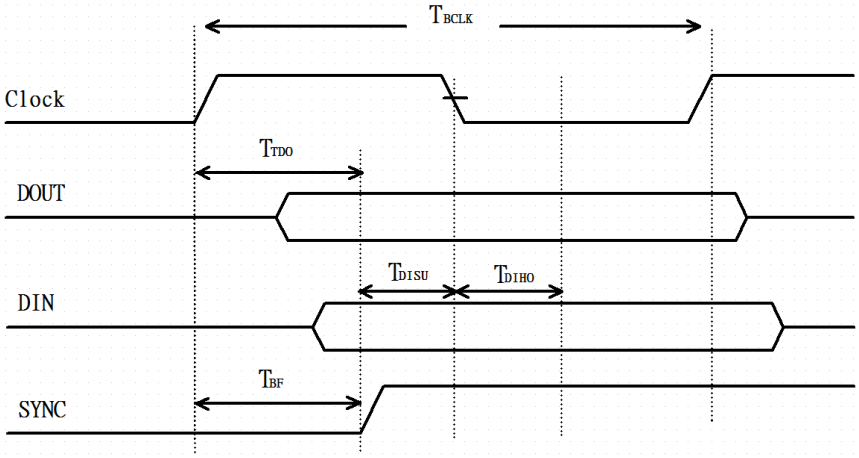

Figure 8: PCM Timing Specification – Master Mode

Table 22: PCM Timing Specification – Master Mode

Symbol	Parameter	Min.	Typ.	Max.	Unit
FBCLK	-	-	2/2.048	-	MHz
Duty CycleBCLK	-	0.4	0.5	0.6	-
TBCLK rise/fall	-	-	3	-	ns
TDO	-	-	-	15	ns
TDISU	-	20	-	-	ns

© Copyright 2020 Laird Connectivity, Inc.
All Rights Reserved
Americas: +1-800-492-2320
Europe: +44-1628-858-940
Hong Kong: +852 2923 0610

Symbol	Parameter	Min.	Typ.	Max.	Unit
TDIHO	-	15	-	-	ns
TBF	-	-	-	15	ns

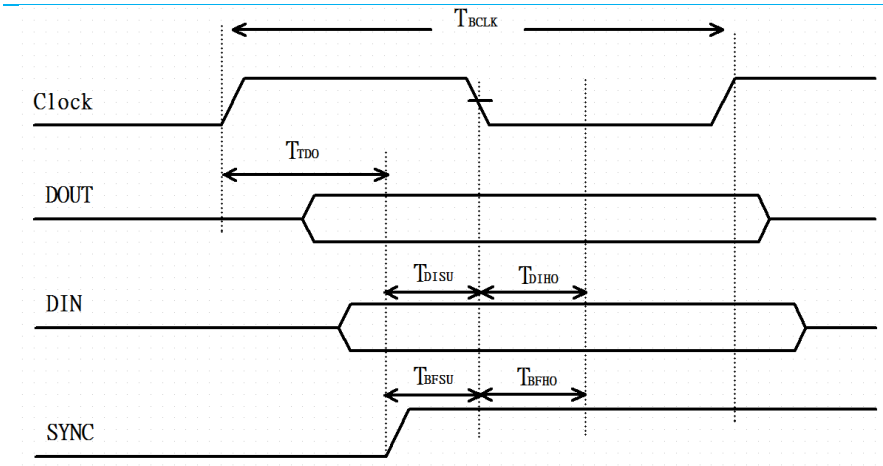

Figure 9: PCM Timing Specification – Slave Mode

Table 23: PCM Timing Specification – Slave Mode

Symbol	Parameter	Min.	Typ.	Max.	Unit
FBCLK	-	-	2/2.048	-	MHz
Duty CycleBCLK	-	0.4	0.5	0.6	-
TBCLK rise/fall	-	-	3	-	ns
TDO	-	-	-	30	ns
TDISU	-	15	-	-	ns
TDIHO	-	10	-	-	ns
TBFSU	-	15	-	-	ns
TBFHO	-	10	-	-	ns

11 Pin Definitions

Table 24: Pin definitions of LWB5+ M.2 module

Pin #	Name	Type	Voltage Ref.	Function	If Not Used
1	GND	-	-	Ground	GND
2	3.3V	PWR I/P	3.3V	DC supply voltage for module. Operational is 3.2V to 3.6V (	--
3	USB_D+	I/O	-	Data plus of shared USB 2.0 port	NC
4	3.3V	PWR I/P	3.3V	DC supply voltage for module. Operational is 3.2V to 3.6V	--
5	USB_D-	I/O	-	Data minus of shared USB 2.0 port	NC
6	LED1#	O	3.3V	Reserved	NC
7	GND	-	-	Ground	GND

© Copyright 2020 Laird Connectivity, Inc.
All Rights Reserved
Americas: +1-800-492-2320
Europe: +44-1628-858-940
Hong Kong: +852 2923 0610

Pin #	Name	Type	Voltage Ref.	Function	If Not Used
8	PCM_CLK	I/O	1.8V	PCM clock. Can be master (Output) or slave (Input)	NC
9	SDIO CLK	I	1.8V	SDIO clock input	NC
10	PCM_SYNC	I/O	1.8V	PCM Sync. Can be master (Output) or slave (Input); Or SLIM bus data.	NC
11	SDIO CMD	I/O	1.8V	SDIO command line	NC
12	PCM_OUT	O	1.8V	PCM data output.	NC
13	SDIO DATA0	I/O	1.8V	SDIO data lin0	NC
14	PCM_IN	I	1.8V	PCM data input.	NC
15	SDIO DATA1	I/O	1.8V	SDIO data lin1	NC
16	LED2#	O	3.3V	Reserved	NC
17	SDIO DATA2	I/O	1.8V	SDIO data lin2	NC
18	GND	-	-	Ground	GND
19	SDIO DATA3	I/O	1.8V	SDIO data lin3	NC
20	UART WAKE#	O	1.8V	Reserved for feature support BT_HOST_WAKE. Output signal to wake up Host.	NC
21	SDIO WAKE#	I	1.8V	Reserved for feature support Reserved for WL_HOST_WAKE. Output signal to wake up host.	NC
22	UART_TXD	O	1.8V	Serial data output for the HCI UART interface.	NC
23	SDIO RESET#	-	-	NC	NC
32	UART_RXD	I	1.8V	Serial data input for the HCI UART interface.	NC
33	GND	-	-	Ground	GND
34	UART_RTS	O	1.8V	Active-Low request-to-send signal for the HCI UART interface.	NC
35	PERp0	-	-	NC	NC
36	UART_CTS	I	1.8V	Active-Low clear-to-send signal for the HCI UART interface.	NC
37	PERn0	-	-	NC	NC
38	VENDER DEFINED38	-	-	NC	NC
39	GND	-	-	Ground	GND
40	VENDER DEFINED40	I	1.8V	Reserved for feature support BT_DEVICE_WAKE. Input signal from Host.	NC
41	PETp0	-	-	NC	NC

© Copyright 2020 Laird Connectivity, Inc.
All Rights Reserved
Americas: +1-800-492-2320
Europe: +44-1628-858-940
Hong Kong: +852 2923 0610

Pin #	Name	Type	Voltage Ref.	Function	If Not Used
42	VENDER DEFINED42	I/O	1.8V	Reserved for feature support Reserved for WL_DEVICE_WAKE. Input from Host to wake up WLAN module.	NC
43	PETn0	-	-	NC	NC
44	COEX3	-	-	NC	NC
45	GND	-	-	Ground	GND
46	COEX2	I/O	1.8V	Reserved for feature support WCI-2 LTE coexistence Interface	NC
47	REFCLKp0	-	-	NC	NC
48	COEX1	I/O	1.8V	Reserved for feature support WCI-2 LTE coexistence Interface	NC
49	REFCLKn0	-	-	NC	NC
50	SUSCLK	I	-	External Sleep Clock input (32.768KHz) The sleep clock is always needed for using this module	--
51	GND	-	-	Ground	GND
52	PERST0#	-	-	NC	NC
53	CLKREQ0#	-	-	NC	NC
54	W_DISABLE2#	I	3.3V	Enables BT regulators. Internal 10K pull-up to enable BT by default. Ground to disable BT.	NC
55	PEWAKE0#	-	-	NC	NC
56	W_DISABLE1#	I	3.3 V	Enables WLAN regulators. Internal 10K pull-up to enable WLAN by default. Ground to disable WLAN.	NC
57	GND	-	-	Ground	GND
58	I2C DATA	-	-	NC	NC
59	RESERVED	-	-	NC	NC
60	I2C CLK	-	-	NC	NC
61	RESERVED	-	-	NC	NC
62	ALERT#	-	-	NC	NC
63	GND	-	-	Ground	GND
64	RESERVED	-	-	NC	NC
65	RESERVED	-	-	NC	NC
66	UIM_SWP	-	-	NC	NC
67	RESERVED	-	-	NC	NC
68	UIM_POWER_SNK	-	-	NC	NC
69	GND	-	-	Ground	GND
70	UIM_POWER_SR	-	-	NC	NC

© Copyright 2020 Laird Connectivity, Inc.
All Rights Reserved
Americas: +1-800-492-2320
Europe: +44-1628-858-940
Hong Kong: +852 2923 0610

Pin #	Name	Type	Voltage Ref.	Function	If Not Used
	C				
71	RESERVED	-	-	NC	NC
72	3.3V	PWR I/P	3.3V	DC supply voltage for module. Operational is 3.2V to 3.6V	--
73	RESERVED	-	-	NC	NC
74	3.3V	PWR I/P	3.3V	DC supply voltage for module. Operational is 3.2V to 3.6V	--
75	GND	-	-	Ground	GND

12 Mechanical Specifications

Module dimensions of LWB5+ M.2 module is 17 x 12 x 2.1 mm. Detail drawings are shown in Figure 10.

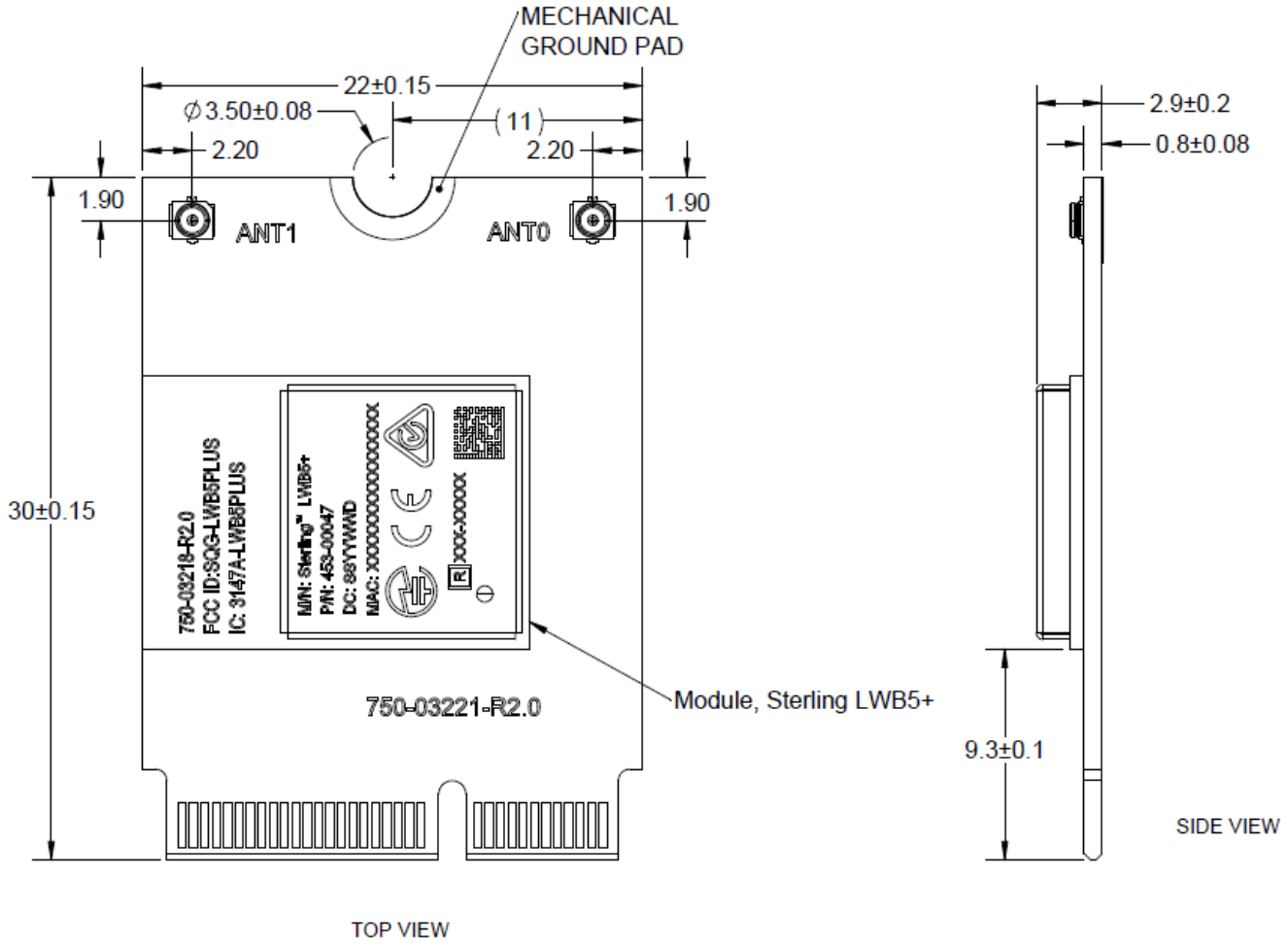

Figure 10: Mechanical drawing - LWB5+ M.2 module

© Copyright 2020 Laird Connectivity, Inc.
All Rights Reserved
Americas: +1-800-492-2320
Europe: +44-1628-858-940
Hong Kong: +852 2923 0610

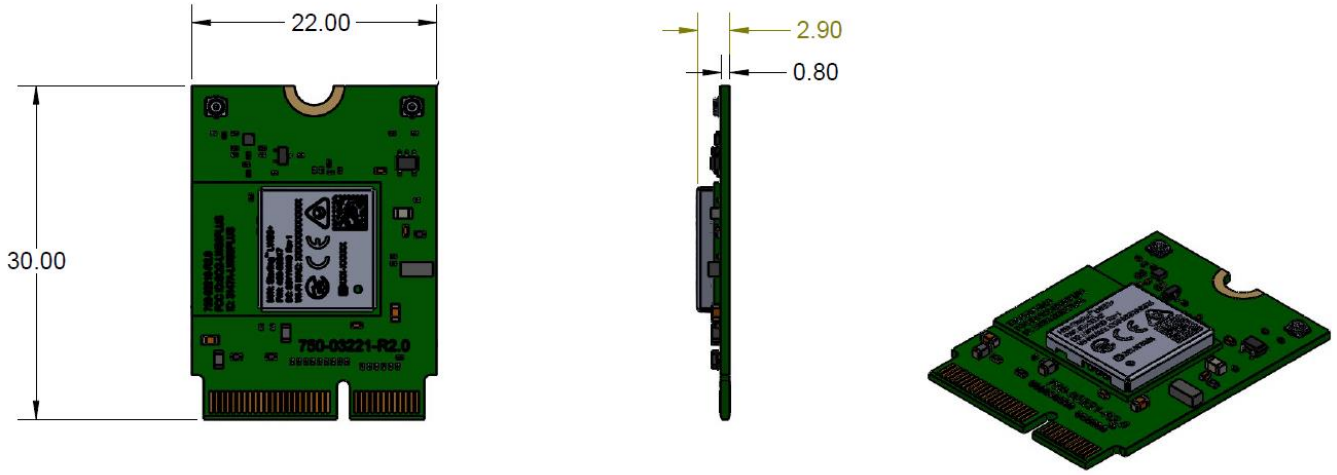

Figure 11: Module dimension of LWB5+ M.2 module – Top View

Note: The Wi-Fi MAC address is located on the product label.

The last digit of Wi-Fi MAC address is assigned to either *0, 2, 4, 6, 8, A, C, E.*

The BT MAC address is the Wi-Fi MAC address plus 1.

13 MOUNTING

The LWB5+ M.2 module connects to the host via a standard PCI EXPRESS M2 connector. The Kyocera's (www.Kyocera-connector.com) 6411 series provide 1.8 mm, 2.3 mm and 3.2 mm connector heights and JAE's (https://www.jae.com/en/) SM3 series provide 1.2 mm, 2.15 mm, 3.1 mm and 4.1 mm connector heights.

Because the LWB5+ M.2 module is a single-side component module, we recommend the following part numbers which have 2.3 mm and 3.1 mm connector height):

M.2 Key-E Connector	Connector Height
KYOCERA 24-6411-067-101-894E	2.3 mm
JAE SM3ZS067U310AERxxxx	3.1 mm

The stand-off mating to the recommend 2.3 mm connector from EMI STOP (www.EMISTOP.com) is part number **F50M16-041525P1D4M** and 3.1mm from JAE (https://www.jae.com/en/) is part number **SM3ZS067U310-NUT1-Rxxxx**.

M.2 Key-E Connector	Stand-off
KYOCERA 24-6411-067-101-894E	EMI STOP F50M16-041525P1D4M
JAE SM3ZS067U310AERxxxx	JAE SM3ZS067U310-NUT1-Rxxxx

Detail layout and stencil opening are show in Figure 12.

© Copyright 2020 Laird Connectivity, Inc.
All Rights Reserved
Americas: +1-800-492-2320
Europe: +44-1628-858-940
Hong Kong: +852 2923 0610

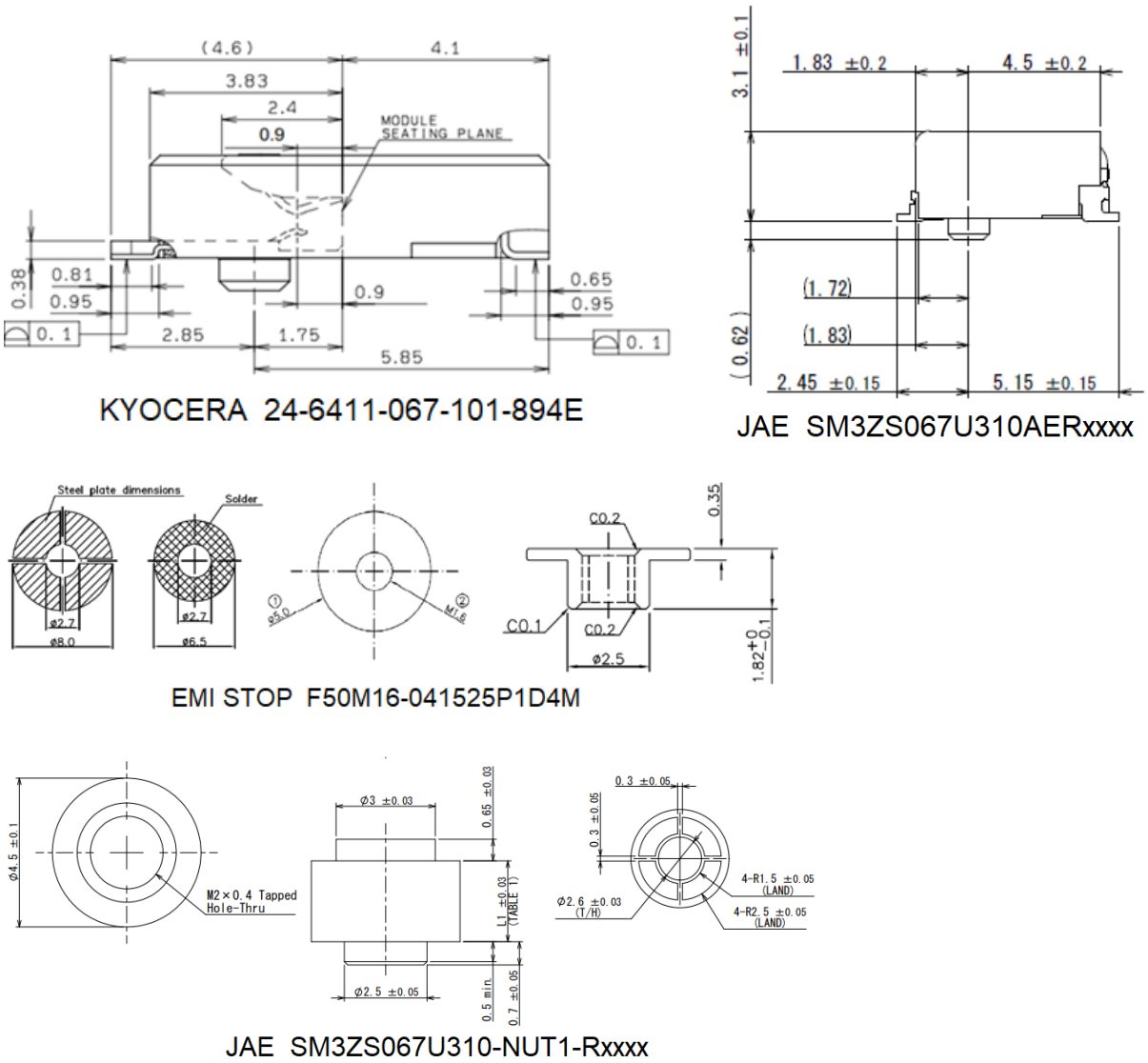

Figure 12: Mounting information of the LWB5+ M.2 module and recommended layout pattern for the stand-off

14 RF Layout Design Guidelines

The following is a list of RF layout design guidelines and recommendation when installing a Laird radio into your device.

- Do not run antenna cables directly above or directly below the radio.
- Do not place any parts or run any high speed digital lines below the radio.
- If there are other radios or transmitters located on the device (such as a *Bluetooth* radio), place the devices as far apart from each other as possible. Also, make sure there is at least 25 dB isolation between these two antennas.
- Ensure that there is the maximum allowable spacing separating the antenna connectors on the Laird radio from the antenna. In addition, do not place antennas directly above or directly below the radio.
- Laird recommends the use of a double-shielded cable for the connection between the radio and the antenna elements.
- Be sure to put a 10uF capacitor on EACH 3.3V power pin. Also, place that capacitor to the pin as close as possible to make sure the internal PMU working correctly.
- Use proper electro-static-discharge (ESD) procedures when installing the Laird radio module.
- To avoid negatively impacting Tx power and receiver sensitivity, do not cover the antennas with metallic objects or components.

© Copyright 2020 Laird Connectivity, Inc.
All Rights Reserved
Americas: +1-800-492-2320
Europe: +44-1628-858-940
Hong Kong: +852 2923 0610

14.1 Recommended and Required Storage/Handling Conditions

14.1.1 Prior to Opening the Dry Packing

The following are required storage conditions ***prior* to opening the dry packing**:

- Normal temperature: 5~40℃
- Normal humidity: 80% (Relative humidity) or less
- Storage period: One year or less

Note: Humidity means Relative Humidity.

14.1.2 After Opening the Dry Packing

The following are required storage conditions ***after* opening the dry packing** (to prevent moisture absorption):

- Storage conditions for one-time soldering:
  - Temperature: 5-25°C
  - Humidity: 60% or less
  - Period: 72 hours or less after opening
- Storage conditions for two-time soldering

  Storage conditions following opening and prior to performing the 1st reflow:

  - Temperature: 5-25°C
  - Humidity: 60% or less
  - Period: A hours or less after opening

  Storage conditions following completion of the 1st reflow and prior to performing the 2nd reflow

  - Temperature: 5-25°C
  - Humidity: 60% or less
  - Period: B hours or less after completion of the 1st reflow

  Note: Should keep A+B within 72 hours.

14.1.3 Temporary Storage Requirements after Opening

The following are temporary storage requirements after opening:

- Only re-store the devices *once* prior to soldering.
- Use a dry box or place desiccant (with a blue humidity indicator) with the devices and perform dry packing again using vacuumed heat-sealing.

The following indicate the required storage period, temperature, and humidity for this temporary storage:

1. Storage temperature and humidity

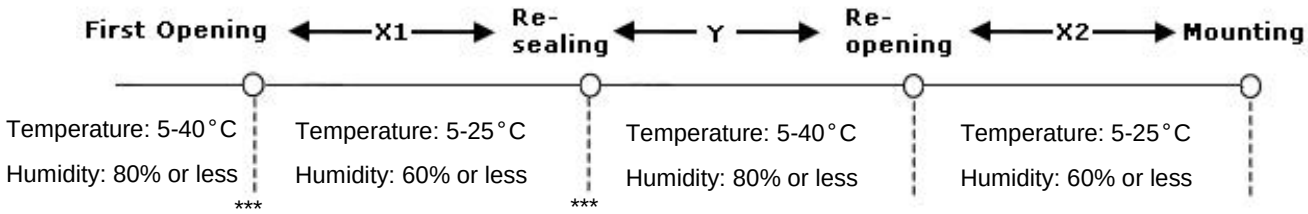

*** - External atmosphere temperature and humidity of the dry packing

2. Storage period
   - X1+X2 – Refer to After Opening the Dry Packing storage requirements. Keep is X1+X2 within 72 hours.
   - Y – Keep within two weeks or less.

- .

© Copyright 2020 Laird Connectivity, Inc.
All Rights Reserved
Americas: +1-800-492-2320
Europe: +44-1628-858-940
Hong Kong: +852 2923 0610

14.1.4 Precautions for Use

- Opening/handing/removing must be done on an anti-ESD treated workbench. All workers must also have undergone anti-ESD treatment.
- The devices should be mounted within one year of the date of delivery.

15 REGULATORY

15.1 Regulatory IDs Summary

Model	US/FCC	Canada/IC	MIC
Sterling LWB5+	SQG-LWB5PLUS	3147A-LWB5PLUS	201-200402

15.2 Certified Antennas

The SQG-LWB5PLUS was tested with antennas listed in the following table. The OEM can choose a different manufacturer's antenna but must make sure it is of same type and that the gain is lesser than or equal to the antenna that is approved for use.

Manufacturer	Model	Laird Connectivity Part	Type	Connector	Peak Gain	
					2.4GHz	5GHz
Laird Connectivity	2.4/5.5 GHz Dipole Antenna	001-0009	Dipole	RP-SMA	2dBi	2dBi
Laird Connectivity	FlexPIFA	001-0021	PIFA	MHF4L	2.5dBi	3dBi
Laird Connectivity	Mini NanoBlade Flex	EMF2449A1-10MH4L	PCB Dipole	MHF4L	2.78dBi	3.38dBi
Laird Connectivity	Nanoblade	ENB2449A1-10MH4L	PCB Dipole	MHF4L	2dBi	3.9dBi
ACX	AD1608-A2455AAT/LF	N/A	Chip Antenna	MHF4L	1dBi	4dBi
Laird	MHF4L Jumper	CARSMF10AMH4L-001	N/A	SMA to MHF4L		

15.3 FCC and IC Regulatory

Model	US/FCC	CANADA/IC
Sterling LWB5+	SQG-LWB5PLUS	3147A-LWB5PLUS

The LWB5+ M.2 module is designed to pass certification with the antenna listed below. The required antenna impedance is 50 ohms.

Manufacturer	Model	Laird Connectivity Part Number	Type	Connector	Peak Gain	
					2.4GHz	5GHz
Laird Connectivity	2.4/5.5 GHz Dipole Antenna	001-0009	Dipole	RP-SMA	2dBi	2dBi
Laird Connectivity	FlexPIFA	001-0021	PIFA	MHF4L	2.5dBi	3dBi
Laird Connectivity	Mini NanoBlade Flex	EMF2449A1-10MH4L	PCB Dipole	MHF4L	2.78dBi	3.38dBi
Laird Connectivity	Nanoblade	ENB2449A1-10MH4L	PCB Dipole	MHF4L	2dBi	3.9dBi
ACX	AD1608-A2455AAT/LF	N/A	Chip	MHF4L	1dBi	4dBi

© Copyright 2020 Laird Connectivity, Inc.
All Rights Reserved
Americas: +1-800-492-2320
Europe: +44-1628-858-940
Hong Kong: +852 2923 0610

		Antenna		
Laird	MHF4L Jumper	CARSMF10AMH4L-001	N/A	SMA to MHF4L

15.4 FCC

Federal Communication Commission Interference Statement

This equipment has been tested and found to comply with the limits for a Class B digital device, pursuant to Part 15 of the FCC Rules. These limits are designed to provide reasonable protection against harmful interference in a residential installation. This equipment generates, uses and can radiate radio frequency energy and, if not installed and used in accordance with the instructions, may cause harmful interference to radio communications. However, there is no guarantee that interference will not occur in a particular installation. If this equipment does cause harmful interference to radio or television reception, which can be determined by turning the equipment off and on, the user is encouraged to try to correct the interference by one of the following measures:

- Reorient or relocate the receiving antenna.
- Increase the separation between the equipment and receiver.
- Connect the equipment into an outlet on a circuit different from that to which the receiver is connected.
- Consult the dealer or an experienced radio/TV technician for help.

FCC Caution: Any changes or modifications not expressly approved by the party responsible for compliance could void the user's authority to operate this equipment.

This device complies with Part 15 of the FCC Rules. Operation is subject to the following two conditions: (1) This device may not cause harmful interference, and (2) this device must accept any interference received, including interference that may cause undesired operation.

Important Note:

Radiation Exposure Statement

The product complies with the US portable RF exposure limit set forth for an uncontrolled environment and is safe for intended operation as described in this manual. The further RF exposure reduction can be achieved if the product can be kept as far as possible from the user body or set the device to lower output power if such function is available.

Country Code selection feature to be disabled for products marketed to the US/CANADA.

This equipment complies with FCC radiation exposure limits set forth for an uncontrolled environment. This equipment should be installed and operated with a minimum distance of 20 centimeters between the radiator and your body.

This transmitter must not be co-located or operating in conjunction with any other antenna or transmitter.

Integration Instructions for Host Product Manufacturers

Applicable FCC rules to module:

FCC Part 15.247

Summarize the specific operational use conditions:

This device is intended only for OEM integrators under the following condition:

- The transmitter module may not be co-located with any other transmitter or antenna

As long as 1 condition above are met, further transmitter test will not be required. However, the OEM integrator is still responsible for testing their end-product for any additional compliance requirements required with this module installed.

IMPORTANT NOTE: In the event that these conditions cannot be met (for example certain laptop configurations or co-location with another transmitter), then the FCC authorization is no longer considered valid and the FCC ID cannot be used on the final product. In these circumstances, the OEM integrator will be responsible for re-evaluating the end product (including the transmitter) and obtaining a separate FCC

© Copyright 2020 Laird Connectivity, Inc.
All Rights Reserved
Americas: +1-800-492-2320
Europe: +44-1628-858-940
Hong Kong: +852 2923 0610

authorization. The OEM integrator has to be aware not to provide information to the end user regarding how to install or remove this RF module in the user's manual of the end product which integrates this module.

The end user manual shall include all required regulatory information/warning as show in this manual.

Limited module procedures

Not applicable

Trace antenna designs

Not applicable

RF exposure considerations

Co-located issue shall be met as mentioned in *Summarize the specific operational use conditions*.

Product manufacturer shall provide the following text in the end-product manual:

> ***FCC Radiation Exposure Statement***
>
> *The product complies with the US portable RF exposure limit set forth for an uncontrolled environment and are safe for intended operation as described in this manual. The further RF exposure reduction can be achieved if the product can be kept as far as possible from the user body or set the device to lower output power if such function is available.*

A 20-centimeter separation distance and co-located issue shall be met as mentioned in *Summarize the specific operational use conditions.*

Product manufacturer shall provide the following text in the end-product manual:

> *This equipment complies with FCC radiation exposure limits set forth for an uncontrolled environment. This equipment should be installed and operated with a minimum distance of 20 centimeters between the radiator and your body.*

Label and Compliance Information

Product manufacturers must provide, with the finished product, a physical or e-label that states the following:

> *Contains FCC ID: SQG-LWB5PLUS*

Information on Test Modes and Additional Testing Requirements

Test tool: wl tool shall be used to set the module to transmit continuously.

Additional Testing, Part 15 Subpart B Disclaimer

The module is only FCC authorized for the specific rule parts listed on the grant, and that the host product manufacturer is responsible for compliance to any other FCC rules that apply to the host not covered by the modular transmitter grant of certification. The final host product still requires Part 15 Subpart B compliance testing with the modular transmitter installed.

15.5 ISED Canada

This device contains licence-exempt transmitter(s)/receiver(s) that comply with Innovation, Science and Economic Development Canada's licence-exempt RSS(s). Operation is subject to the following two conditions:

(1) This device may not cause interference

(2) This device must accept any interference, including interference that may cause undesired operation of the device

L'émetteur/récepteur exempt de licence contenu dans le présent appareil est conforme aux CNR d'Innovation, Sciences et Développement économique Canada applicables aux appareils radio exempts de licence. L'exploitation est autorisée aux deux conditions suivantes :

(1) L'appareil ne doit pas produire de brouillage;

© Copyright 2020 Laird Connectivity, Inc.
All Rights Reserved
Americas: +1-800-492-2320
Europe: +44-1628-858-940
Hong Kong: +852 2923 0610

(2) L'appareil doit accepter tout brouillage radioélectrique subi, même si le brouillage est susceptible d'en compromettre le fonctionnement.

This radio transmitter (IC: 3147A-LWB5PLUS) has been approved by Innovation, Science and Economic Development Canada to operate with the antenna types listed below, with the maximum permissible gain indicated. Antenna types not included in this list that have a gain greater than the maximum gain indicated for any type listed are strictly prohibited for use with this device.

Le présent émetteur radio (IC: 3147A-LWB5PLUS) a été approuvé par Innovation, Sciences et Développement économique Canada pour fonctionner avec les types d'antenne énumérés ci dessous et ayant un gain admissible maximal. Les types d'antenne non inclus dans cette liste, et dont le gain est supérieur au gain maximal indiqué pour tout type figurant sur la liste, sont strictement interdits pour l'exploitation de l'émetteur.

Manufacturer	Model	Laird Connectivity Part Number	Type	Connector	Peak Gain	
					2.4GHz	5GHz
Laird	2.4/5.5 GHz Dipole Antenna	001-0009	Dipole	RP-SMA	2dBi	2dBi
Laird	FlexPIFA	001-0021	PIFA	MHF4L	2.5dBi	3dBi
Laird	Mini NanoBlade Flex	EMF2449A1-10MH4L	PCB Dipole	MHF4L	2.78dBi	3.38dBi
Laird	Nanoblade	ENB2449A1-10MH4L	PCB Dipole	MHF4L	2dBi	3.9dBi
ACX	AD1608-A2455AAT/LF	N/A	Chip Antenna	MHF4L	1dBi	4dBi
Laird	MHF4L Jumper	CARSMF10AMH4L-001	N/A	SMA to MHF4L		

Radiation Exposure Statement:

This equipment complies with Canada radiation exposure limits set forth for an uncontrolled environment. This equipment should be installed and operated with minimum distance 20cm between the radiator & your body.

Déclaration d'exposition aux radiations:

Cet équipement est conforme Canada limites d'exposition aux radiations dans un environnement non contrôlé. Cet équipement doit être installé et utilisé à distance minimum de 20cm entre le radiateur et votre corps.

This device is intended only for OEM integrators under the following conditions:

1) The transmitter module may not be co-located with any other transmitter or antenna.

As long as the condition above is met, further transmitter testing is not required. However, the OEM integrator is still responsible for testing their end-product for any additional compliance requirements required with this module installed.

Cet appareil est conçu uniquement pour les intégrateurs OEM dans les conditions suivantes:

1) Le module émetteur peut ne pas être coïmplanté avec un autre émetteur ou antenne.

Tant que les 1 condition ci-dessus sont remplies, des essais supplémentaires sur l'émetteur ne seront pas nécessaires. Toutefois, l'intégrateur OEM est toujours responsable des essais sur son produit final pour toutes exigences de conformité supplémentaires requis pour ce module installé.

IMPORTANT NOTE: In the event that these conditions cannot be met (for example certain laptop configurations or co-location with another transmitter), then the Canada authorization is no longer considered valid and the IC ID cannot be used on the final product. In these circumstances, the OEM integrator will be responsible for re-evaluating the end product (including the transmitter) and obtaining a separate Canada authorization.

© Copyright 2020 Laird Connectivity, Inc.
All Rights Reserved
Americas: +1-800-492-2320
Europe: +44-1628-858-940
Hong Kong: +852 2923 0610

NOTE IMPORTANTE:	Dans le cas où ces conditions ne peuvent être satisfaites (par exemple pour certaines configurations d'ordinateur portable ou de certaines co-localisation avec un autre émetteur), l'autorisation du Canada n'est plus considéré comme valide et l'ID IC ne peut pas être utilisé sur le produit final. Dans ces circonstances, l'intégrateur OEM sera chargé de réévaluer le produit final (y compris l'émetteur) et l'obtention d'une autorisation distincte au Canada.

End Product Labeling

The final end product must be labeled in a visible area with the following: “Contains IC: 3147A-LWB5PLUS.

Plaque signalétique du produit final

Le produit final doit être étiqueté dans un endroit visible avec l'inscription suivante: "Contient des IC: 3147A-LWB5PLUS.

Manual Information to the End User

The OEM integrator has to be aware not to provide information to the end user regarding how to install or remove this RF module in the user’s manual of the end product which integrates this module.

The end user manual shall include all required regulatory information/warning as show in this manual.

Manuel d'information à l'utilisateur final

L'intégrateur OEM doit être conscient de ne pas fournir des informations à l'utilisateur final quant à la façon d'installer ou de supprimer ce module RF dans le manuel de l'utilisateur du produit final qui intègre ce module.

Le manuel de l'utilisateur final doit inclure toutes les informations réglementaires requises et avertissements comme indiqué dans ce manuel

15.6 Japan (MIC) Regulatory

It is recommended that the host device bears a label showing the Japanese “GITEKI” mark and the certification number accompanied by the following statement:

当該機器には電波法に基づく、技術基準適合証明等を受けた特定無線設備を装着している

Translation: “This equipment contains specified radio equipment that has been certified to the Technical Regulation Conformity Certification under the Radio Law.”

R 201-200402

© Copyright 2020 Laird Connectivity, Inc.
All Rights Reserved
Americas: +1-800-492-2320
Europe: +44-1628-858-940
Hong Kong: +852 2923 0610

15.7 European Union

The integrator must include specific information in the user's guide for the device into which the Sterling-LWB5+ is integrated. In addition to the required FCC and IC statements outlined above, the following Radio Equipment Directive (RED) statements must be added in their entirety and without modification into a prominent place in the user's guide for the device into which the LWB5+ is integrated:

This device complies with the essential requirements of the 2014/53/EU – Radio Equipment Directive (RED). The following test methods have been applied in order to prove presumption of conformity with the essential requirements of the 2014/53/EU – Radio Equipment Directive (RED):

- **EN 62368-1:2014/A11:2017**

  Safety requirements for audio/video, information, and technology equipment

- **EN 300 328 v2.2.2 (2019-07)**

  Electromagnetic compatibility and Radio Spectrum Matters (ERM); Wideband Transmission systems; Data transmission equipment operating in the 2,4 GHz ISM band and using spread spectrum modulation techniques; Harmonized EN covering essential requirements under article 3.2 of the R&TTE Directive

- **EN 62311:2008 | EN 50665:2017 | EN 50385:2017**

  RF exposure

- **EN 301 489-1 v2.2.0 (2017-03)**

  Electromagnetic compatibility and Radio Spectrum Matters (ERM); ElectroMagnetic Compatibility (EMC) standard for radio equipment and services; Part 1: Common technical requirements

- **EN 301 489-17 V3.2.0 (2017-03)**

  Electromagnetic compatibility and Radio spectrum Matters (ERM); ElectroMagnetic Compatibility (EMC) standard for radio equipment and services; Part 17: Specific conditions for 2,4 GHz wideband transmission systems and 5 GHz high performance RLAN equipment

- **EN 301 893 V2.1.1 (2017-05)**

  Electromagnetic compatibility and Radio spectrum Matters (ERM); Broadband Radio Access Networks (BRAN); Specific conditions for 5 GHz high performance RLAN equipment

- **EU 2015/863 (RoHS 3)**

  Declaration of Compliance – EU Directive 2015/863; Reduction of Hazardous Substances (RoHS)

This device is a 2.4 GHz wideband transmission system (transceiver), intended for use in all EU member states and EFTA countries, except in France and Italy where restrictive use applies.

In Italy the end-user should apply for a license at the national spectrum authorities in order to obtain authorization to use the device for setting up outdoor radio links and/or for supplying public access to telecommunications and/or network services.

This device may not be used for setting up outdoor radio links in France and in some areas the RF output power may be limited to 10 mW EIRP in the frequency range of 2454 – 2483.5 MHz. For detailed information the end-user should contact the national spectrum authority in France.

български [Bulgarian]	С настоящото *[*име на производителя*]* декларира, че това устройство *[вид оборудване]* е в съответствие със съществените изисквания и други приложими разпоредби на Директиви 2014/53/ЕС
Hrvatski [Croatian]	*[naziv proizvođača]* ovim putem izjavljuje da je ovaj uređaj *[vrsta opreme]* sukladan osnovnim zahtjevima i ostalim bitnim odredbama Direktiva 2014/53/EU
Česky [Czech]	*[Jméno výrobce]* tímto prohlašuje, že tento *[typ zařízení]* je ve shodě se základními požadavky a dalšími příslušnými ustanoveními směrnice 2014/53/EU.
Dansk [Danish]	Undertegnede *[fabrikantens navn]* erklærer herved, at følgende udstyr *[udstyrets typebetegnelse]* overholder de væsentlige krav og øvrige relevante krav i direktiv 2014/53/EU.
Deutsch [German]	Hiermit erklärt *[Name des Herstellers]*, dass sich das Gerät *[Gerätetyp]* in Übereinstimmung mit den grundlegenden Anforderungen und den übrigen einschlägigen Bestimmungen der

© Copyright 2020 Laird Connectivity, Inc.
All Rights Reserved
Americas: +1-800-492-2320
Europe: +44-1628-858-940
Hong Kong: +852 2923 0610

	Richtlinie 2014/53/EU befindet.
Eesti [Estonian]	Käesolevaga kinnitab *[tootja nimi]* seadme *[seadme tüüp]* vastavust direktiivi 2014/53/EL põhinõuetele ja nimetatud direktiivist tulenevatele teistele asjakohastele sätetele.
English	Hereby, *[name of manufacturer]*, declares that this *[type of equipment]* is in compliance with the essential requirements and other relevant provisions of Directive 2014/53/EU.
Español [Spanish]	Por medio de la presente *[nombre del fabricante]* declara que el *[clase de equipo]* cumple con los requisitos esenciales y cualesquiera otras disposiciones aplicables o exigibles de la Directiva 2014/53/UE.
Ελληνική [Greek]	ΜΕ ΤΗΝ ΠΑΡΟΥΣΑ *[όνομα του κατασκευαστή]* ΔΗΛΩΝΕΙ ΟΤΙ *[εξοπλισμού]* ΣΥΜΜΟΡΦΩΝΕΤΑΙ ΠΡΟΣ ΤΙΣ ΟΥΣΙΩΔΕΙΣ ΑΠΑΙΤΗΣΕΙΣ ΚΑΙ ΤΙΣ ΛΟΙΠΕΣ ΣΧΕΤΙΚΕΣ ΔΙΑΤΑΞΕΙΣ ΤΗΣ ΟΔΗΓΙΑΣ 2014/53/ΕΕ.
Français [French]	Par la présente *[nom du fabricant]* déclare que l'appareil *[type d'appareil]* est conforme aux exigences essentielles et aux autres dispositions pertinentes de la directive 2014/53/UE.
Íslenska [Icelandic]	Hér, *[Nafn framleiðanda]*, því yfir að þetta *[gerð búnaðar]* tæki er í samræmi við grunnkröfur og önnur viðeigandi ákvæði tilskipana 2014/53/ ESB
Italiano [Italian]	Con la presente *[nome del costruttore]* dichiara che questo *[tipo di apparecchio]* è conforme ai requisiti essenziali ed alle altre disposizioni pertinenti stabilite dalla direttiva 2014/53/UE.
Latviešu valoda [Latvian]	Aršo*[izgatavotājanosaukums]* deklarē, ka *[iekārtas tips]* atbilstDirektīvas 2014/53/ES būtiskajāmprasībām un citiemar to saistītajiemnoteikumiem.
Lietuvių kalba [Lithuanian]	Šiuo *[gamintojo pavadinimas]* deklaruoja, kad šis *[įrangos tipas]* atitinka esminius reikalavimus ir kitas 2014/53/ES Direktyvos nuostatas.
Nederlands [Dutch]	Hierbij verklaart *[naam van de fabrikant]* dat het toestel *[type van toestel]* in overeenstemming is met de essentiële eisen en de andere relevante bepalingen van richtlijn 2014/53/EU.
Malti [Maltese]	Hawnhekk, *[isem tal-manifattur]*, jiddikjara li dan *[il-mudel tal-prodott]* jikkonforma mal-ħtiġijiet essenzjali u ma provvedimenti oħrajn relevanti li hemm fid-Dirrettiva 2014/53/UE.
Magyar [Hungarian]	Alulírott, *[gyártó neve]* nyilatkozom, hogy a *[... típus]*megfelel a vonatkozó alapvetõ követelményeknek és az 2014/53/EU irányelv egyéb elõírásainak.
Norsk [Norwegian]	Herved *[navnet på produsenten]*, erklærer at denne *[type utstyr]* enheten, er i samsvar med de grunnleggende kravene og andre relevante bestemmelser i direktivene 2014/53/EU
Polski [Polish]	Niniejszym *[nazwa producenta]* oświadcza, że *[nazwa wyrobu]* jest zgodny z zasadniczymi wymogami oraz pozostałymi stosownymi postanowieniami Dyrektywy 2014/53/UE.
Português [Portuguese]	*[Nome do fabricante]* declara que este *[tipo de equipamento]* está conforme com os requisitos essenciais e outras disposições da Directiva 2014/53/UE.
Română [Romanian]	Prin prezenta, *[numele producătorului]* declară că acest dispozitiv *[tipul de echipament]* este în conformitate cu cerințele esențiale și alte prevederi relevante ale Directivelor 2014/53/UE
Slovenščina [Slovenian]	*[Ime proizvajalca]* izjavlja, da je ta *[tip opreme]* v skladu z bistvenimi zahtevami in ostalimi relevantnimi določili direktive 2014/53/EU.
Slovenčina [Slovak]	*[Menovýrobcu]* týmtovyhlasuje, že *[typzariadenia]* spĺňazákladnépožiadavky a všetkypríslušnéustanovenia Smernice 2014/53/EU.
Suomi [Finnish]	*[Valmistaja]* vakuuttaa täten että *[laitteen tyyppimerkintä]* tyyppinen laite on direktiivin 2014/53/EU oleellisten vaatimusten ja sitä koskevien direktiivin muiden ehtojen mukainen.
Svenska [Swedish]	Härmed intygar *[företag]* att denna *[utrustningstyp]* står I överensstämmelse med de väsentliga egenskapskrav och övriga relevanta bestämmelser som framgår av direktiv 2014/53/EU.

© Copyright 2020 Laird Connectivity, Inc.
All Rights Reserved
Americas: +1-800-492-2320
Europe: +44-1628-858-940
Hong Kong: +852 2923 0610

15.7.1 EU Declarations of Conformity

This device complies with the essential requirements of the Radio Equipment directive: 2014/53/EU. The following test methods have been applied to prove presumption of conformity with the essential requirements of the Radio Equipment directive **2014/53/EU**:

Manufacturer:	Laird
Products:	453-00048, 453-00049
Product Description	LWB5+ series M.2 module
EU Directives:	2014/53/EU – Radio Equipment Directive (RED)

Reference standards used for presumption of conformity:

Article Number	Requirement	Reference standard(s)
3.1a	Low voltage equipment safety	EN 62368-1:2014
	RF Exposure	EN 62311:2008 EN 50665:2017 EN 50385:2017
3.1b	Protection requirements with respect to electromagnetic compatibility	EN 301 489-1 v2.2.3 (2019-11) EN 301 489-17 v3.2.2 (2019-12)
3.2	Means of the efficient use of the radio frequency spectrum	EN 300 328 v2.2.2 (2019-07) EN 301 893 v2.1.1 (2017-05) EN 300 440 v2.1.1

Declaration:

We, Laird Connectivity, declare under our sole responsibility that the essential radio test suites have been carried out and that the above product to which this declaration relates is in conformity with all the applicable essential requirements of Article 3 of the EU Directive 1999/5/EC, when used for its intended purpose.

Place of Issue:	Laird W66N220 Commerce Court, Cedarburg, WI 53012 USA tel: +1-262-375-4400 fax: +1-262-364-2649
Date of Issue:	
Name of Authorized Person:	
Signature of Authorized Person:	

16 Ordering Information

Part Number	Description
453-00048	1x1 802.11 a/b/g/n/ac + Bluetooth 5.0 SDIO/UART M.2 Module
453-00049	1x1 802.11 a/b/g/n/ac + Bluetooth 5.0 USB/USB M.2 Module
453-00048-K1	Development Kit for 1x1 802.11 a/b/g/n/ac + Bluetooth 5.0 SDIO/UART M.2 Module
453-00049-K1	Development Kit for 1x1 802.11 a/b/g/n/ac + Bluetooth 5.0 USB/USB M.2 Module

16.1 General Comments

This is a preliminary datasheet. Please check with Laird for the latest information before commencing a design. If in doubt, ask.

© Copyright 2020 Laird Connectivity, Inc.
All Rights Reserved
Americas: +1-800-492-2320
Europe: +44-1628-858-940
Hong Kong: +852 2923 0610

Česky [Czech]	*[Jméno výrobce]* tímto prohlašuje, že tento *[typ zařízení]* je ve shodě se základními požadavky a dalšími příslušnými ustanoveními směrnice 1999/5/ES.
Dansk [Danish]	Undertegnede *[fabrikantens navn]* erklærer herved, at følgende udstyr *[udstyrets typebetegnelse]* overholder de væsentlige krav og øvrige relevante krav i direktiv 1999/5/EF.
Deutsch [German]	Hiermit erklärt *[Name des Herstellers]*, dass sich das Gerät *[Gerätetyp]* in Übereinstimmung mit den grundlegenden Anforderungen und den übrigen einschlägigen Bestimmungen der Richtlinie 1999/5/EG befindet.
Eesti [Estonian]	Käesolevaga kinnitab *[tootja nimi = name of manufacturer]* seadme *[seadme tüüp = type of equipment]* vastavust direktiivi 1999/5/EÜ põhinõuetele ja nimetatud direktiivist tulenevatele teistele asjakohastele sätetele.
English	Hereby, *[name of manufacturer]*, declares that this *[type of equipment]* is in compliance with the essential requirements and other relevant provisions of Directive 1999/5/EC.
Español [Spanish]	Por medio de la presente *[nombre del fabricante]* declara que el *[clase de equipo]* cumple con los requisitos esenciales y cualesquiera otras disposiciones aplicables o exigibles de la Directiva 1999/5/CE.
Ελληνική [Greek]	ΜΕ ΤΗΝ ΠΑΡΟΥΣΑ *[name of manufacturer]* ΔΗΛΩΝΕΙ ΟΤΙ *[type of equipment]* ΣΥΜΜΟΡΦΩΝΕΤΑΙ ΠΡΟΣ ΤΙΣ ΟΥΣΙΩΔΕΙΣ ΑΠΑΙΤΗΣΕΙΣ ΚΑΙ ΤΙΣ ΛΟΙΠΕΣ ΣΧΕΤΙΚΕΣ ΔΙΑΤΑΞΕΙΣ ΤΗΣ ΟΔΗΓΙΑΣ 1999/5/ΕΚ.
Français [French]	Par la présente *[nom du fabricant]* déclare que l'appareil *[type d'appareil]* est conforme aux exigences essentielles et aux autres dispositions pertinentes de la directive 1999/5/CE.
Italiano [Italian]	Con la presente *[nome del costruttore]* dichiara che questo *[tipo di apparecchio]* è conforme ai requisiti essenziali ed alle altre disposizioni pertinenti stabilite dalla direttiva 1999/5/CE.
Latviski [Latvian]	Aršo *[name of manufacturer /izgatavotājanosaukums]* deklarē, ka *[type of equipment / iekārtas tips]* atbilstDirektīvas 1999/5/EK būtiskajāmprasībām un citiemar to saistītajiemnoteikumiem.
Lietuvių [Lithuanian]	Šiuo *[manufacturer name]* deklaruoja, kad šis *[equipment type]* atitinka esminius reikalavimus ir kitas 1999/5/EB Direktyvos nuostatas.
Nederlands [Dutch]	Hierbij verklaart *[naam van de fabrikant]* dat het toestel *[type van toestel]* in overeenstemming is met de essentiële eisen en de andere relevante bepalingen van richtlijn 1999/5/EG.
Malti [Maltese]	Hawnhekk, *[isem tal-manifattur]*, jiddikjara li dan *[il-mudel tal-prodott]* jikkonforma mal-ħtiġijiet essenzjali u ma provvedimenti oħrajn relevanti li hemm fid-Dirrettiva 1999/5/EC.
Magyar [Hungarian]	Alulírott, *[gyártó neve]* nyilatkozom, hogy a *[... típus]* megfelel a vonatkozó alapvető követelményeknek és az 1999/5/EC irányelv egyéb előírásainak.
Polski [Polish]	Niniejszym *[nazwa producenta]* oświadcza, że *[nazwa wyrobu]* jest zgodny z zasadniczymi wymogami oraz pozostałymi stosownymi postanowieniami Dyrektywy 1999/5/EC.
Português [Portuguese]	*[Nome do fabricante]* declara que este *[tipo de equipamento]* está conforme com os requisitos essenciais e outras disposições da Directiva 1999/5/CE.
Slovensko [Slovenian]	*[Ime proizvajalca]* izjavlja, da je ta *[tip opreme]* v skladu z bistvenimi zahtevami in ostalimi relevantnimi določili direktive 1999/5/ES.
Slovensky [Slovak]	*[Menovýrobcu]* týmtovyhlasuje, že *[typzariadenia]* spĺňazákladnépožiadavky a všetkyprísluš né ustanoveniaSmernice 1999/5/ES.
Suomi [Finnish]	*[Valmistaja = manufacturer]* vakuuttaa täten että *[type of equipment = laitteen tyyppimerkintä]* tyyppinen laite on direktiivin 1999/5/EY oleellisten vaatimusten ja sitä koskevien direktiivin muiden ehtojen mukainen.
Svenska [Swedish]	Härmed intygar *[företag]* att denna *[utrustningstyp]* står I överensstämmelse med de väsentliga egenskapskrav och övriga relevanta bestämmelser som framgår av direktiv 1999/5/EG.

© Copyright 2020 Laird Connectivity, Inc.
All Rights Reserved
Americas: +1-800-492-2320
Europe: +44-1628-858-940
Hong Kong: +852 2923 0610

17 Bluetooth SIG Qualification

17.1 Overview

The LWB5+ Series module is listed on the Bluetooth SIG website as a qualified Controller Subsystem.

Design Name	Owner	Declaration ID	Link to listing on the SIG website
	Laird		
	Laird		

It is a mandatory requirement of the Bluetooth Special Interest Group (SIG) that every product implementing Bluetooth technology has a Declaration ID. Every Bluetooth design is required to go through the qualification process, even when referencing a Bluetooth Design that already has its own Declaration ID. The Qualification Process requires each company to register as a member of the Bluetooth SIG – www.bluetooth.org

The following is a link to the Bluetooth Registration page: https://www.bluetooth.org/login/register/

For each Bluetooth Design, it is necessary to purchase a Declaration ID. This can be done before starting the new qualification, either through invoicing or credit card payment. The fees for the Declaration ID will depend on your membership status, please refer to the following webpage:

https://www.bluetooth.org/en-us/test-qualification/qualification-overview/fees

For a detailed procedure of how to obtain a new Declaration ID for your design, please refer to the following SIG document, (login is required to views this document):

https://www.bluetooth.org/DocMan/handlers/DownloadDoc.ashx?doc_id=283698&vId=317486

17.2 Qualification Steps When Referencing a Laird Controller Subsystem Design

To qualify your product when referencing a Laird Controller Subsystem design, follow these steps:

1. To start a listing, go to: https://www.bluetooth.org/tpg/QLI_SDoc.cfm

   Note: A user name and password are required to access this site.

2. In step 1, select the option, New Listing and Reference a Qualified Design.
3. Enter *XXXXX* in the Controller Subsystem table entry.
4. Enter your complimentary Host Subsystem and optional Profile Subsystem QDID in the table entry.
5. Select your pre-paid Declaration ID from the drop-down menu or go to the Purchase Declaration ID page.

   Note: Unless the Declaration ID is pre-paid or purchased with a credit card, you cannot proceed until the SIG invoice is paid.

6. Once all the relevant sections of step 1 are finished, complete steps 2, 3, and 4 as described in the help document accessible from the site.

   Your new design will be listed on the SIG website and you can print your Certificate and DoC.

For further information please refer to the following training material:

https://www.bluetooth.org/en-us/test-qualification/qualification-overview/listing-process-updates

If you require assistance with the qualification process please contact our recommended Bluetooth Qualification Expert (BQE), Steve Flooks, steve.flooks@eurexuk.com.

© Copyright 2020 Laird Connectivity. All Rights Reserved. Any information furnished by Laird Connectivity and its agents is believed to be accurate and reliable. All specifications are subject to change without notice. Responsibility for the use and application of Laird Connectivity

materials or products rests with the end user since Laird Connectivity and its agents cannot be aware of all potential uses. Laird Connectivity makes no warranties as to non-infringement nor as to the fitness, merchantability, or sustainability of any Laird Connectivity materials or products for any specific or general uses. Laird Connectivity or any of its affiliates or agents shall not be liable for incidental or consequential damages of any kind. All Laird Connectivity products are sold pursuant to the Laird Connectivity Terms and Conditions of Sale in effect from time to time, a copy of which will be furnished upon request. Nothing herein provides a license under any Laird Connectivity or any third-party intellectual property right.

© Copyright 2020 Laird Connectivity, Inc.
All Rights Reserved
Americas: +1-800-492-2320
Europe: +44-1628-858-940
Hong Kong: +852 2923 0610