16.2.2 M.2 2230 E-Key Module

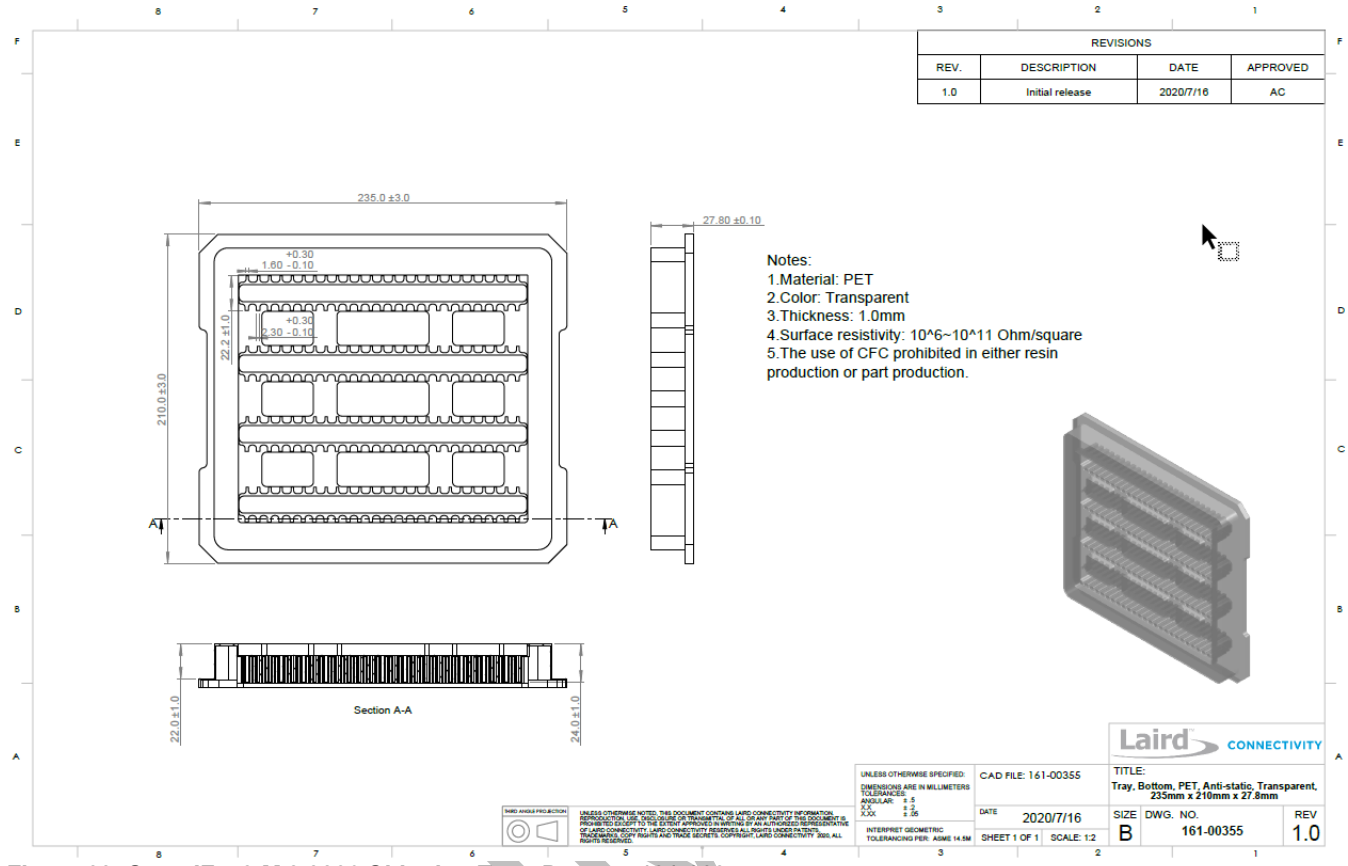

Figure 32: Sona IF573 M.2 2230 Shipping Tray, Bottom, 161-00355

PRELIM

© Copyright 2023 Laird Connectivity, Inc.
All Rights Reserved
Americas: +1-800-492-2320
Europe: +44-1628-858-940
Hong Kong: +852-2762-4823

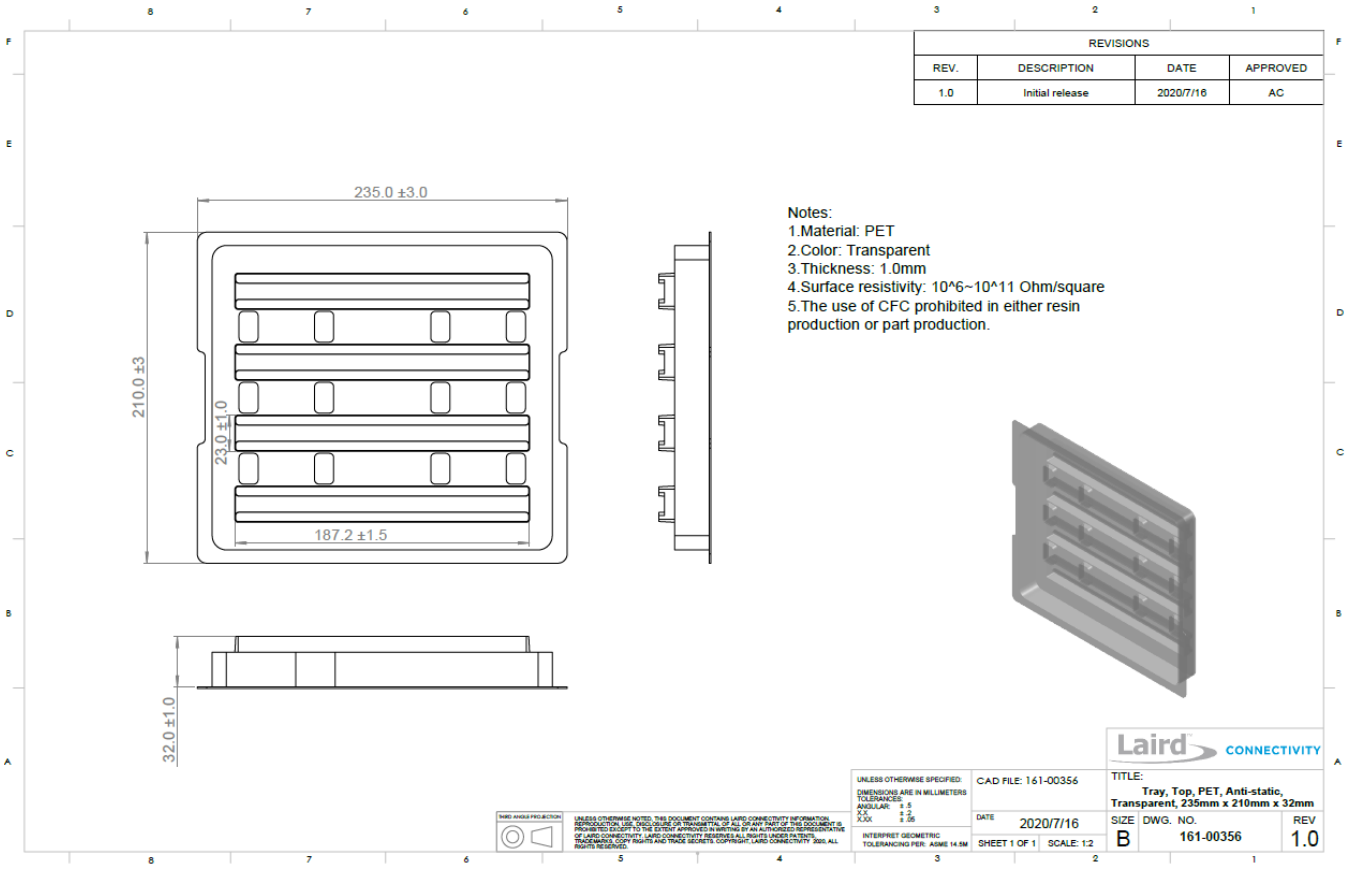

Figure 33: Sona IF573 M.2 2230 Shipping Tray, Top, 161-00356

PRELIM

© Copyright 2023 Laird Connectivity, Inc.
All Rights Reserved
Americas: +1-800-492-2320
Europe: +44-1628-858-940
Hong Kong: +852-2762-4823

ITEM NO.	PART NUMBER	REV.	DESCRIPTION	QTY.
1	453-00119	1.0	Module, Sona IF573, MIMO, M.2, Key E, SDIO, UART	600
2	161-00355	1.0	Tray, Bottom, PET, Anti-static, Transparent, 235mm x 210mm x 27.8mm	6
3	161-00356	1.0	Tray, Top, PET, Anti-static, Transparent, 235mm x 210mm x 32mm	6
4	161-00357	1.0	Box, Kraft, B Flute, 255mm x 215mm x 43mm	6
5	160-02373	1.0	Label, Box Product Identifier, Sona IF573, M.2, 89mm x 51mm	12
6	161-00361	1.0	Desiccant, Silica Gel, 10g, 58mm x 80mm	6
7	161-00358	1.0	Bag, ESD and Moisture Barrier, Silver, 270mm x 360mm x 0.09mm	6
8	161-00359	1.0	Carton, Kraft, AB Flute, 455mm x 268mm x 170mm	1
9	160-02374	1.0	Label, Carton Product Identifier, Sona IF573, M.2, 101mm x 64mm	2

REVISIONS			
REV.	DESCRIPTION	DATE	APPROVED
0	Initial release	Oct 26, 2022	AC

Notes:
1.Put the Module in the bottom tray.
2.Cover the top tray.
3.Put the tray and Desiccant in the ESD bag.
4.Put the packed ESD bag (vacuum) in the box.
5.Put six boxes in the carton.
6.Module packaging quantity:
Per Tray: 100 PCS
Per Carton: 600PCS

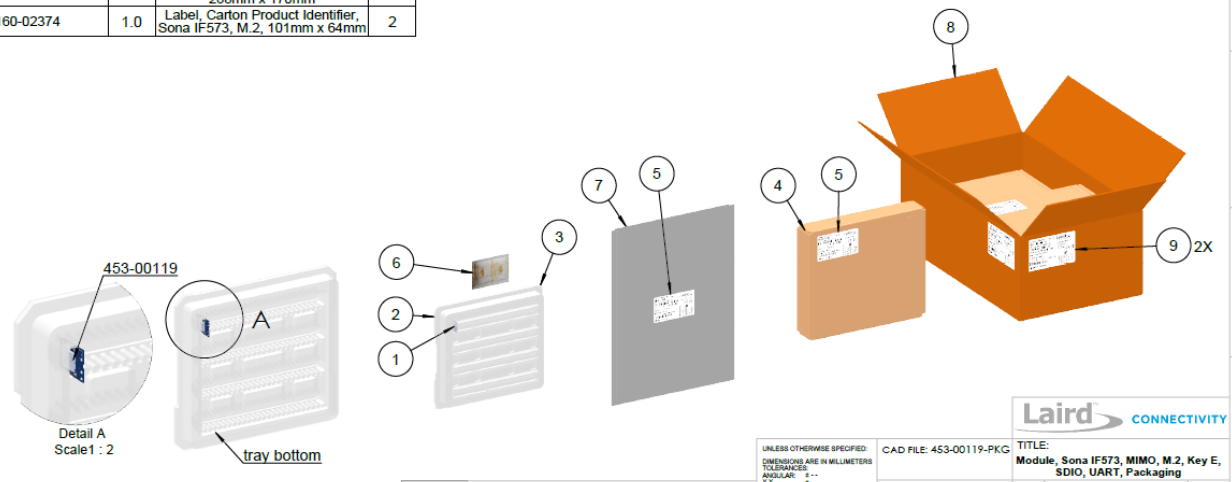

UNLESS OTHERWISE SPECIFIED:
DIMENSIONS ARE IN MILLIMETERS
TOLERANCES:
ANGULAR: ± --
X.X: ± --
X.XX: ± --
INTERPRET GEOMETRIC TOLERANCING PER: ASME 14.5M

THIRD ANGLE PROJECTION

UNLESS OTHERWISE NOTED, THIS DOCUMENT CONTAINS LAIRD CONNECTIVITY INFORMATION. REPRODUCTION, USE, DISCLOSURE OR TRANSMITTAL OF ALL OR ANY PART OF THIS DOCUMENT IS PROHIBITED EXCEPT TO THE EXTENT APPROVED IN WRITING BY AN AUTHORIZED REPRESENTATIVE OF LAIRD CONNECTIVITY. LAIRD CONNECTIVITY RESERVES ALL RIGHTS UNDER PATENTS, TRADEMARKS, COPY RIGHTS AND TRADE SECRETS. COPYRIGHT, LAIRD CONNECTIVITY 2020, ALL RIGHTS RESERVED.

CAD FILE: 453-00119-PKG
DATE: Oct 26, 2022
SHEET 1 OF 1 | SCALE: 1:5
TITLE: Module, Sona IF573, MIMO, M.2, Key E, SDIO, UART, Packaging
SIZE: B | DWG. NO.: 453-00119-PKG | REV: 0

Figure 34: Sona IF573 M.2 2230 Packaging Process, 453-00119-PKG

The following label is placed on the bag and the inner box.

PRELIM

© Copyright 2023 Laird Connectivity, Inc.
All Rights Reserved
Americas: +1-800-492-2320
Europe: +44-1628-858-940
Hong Kong: +852-2762-4823

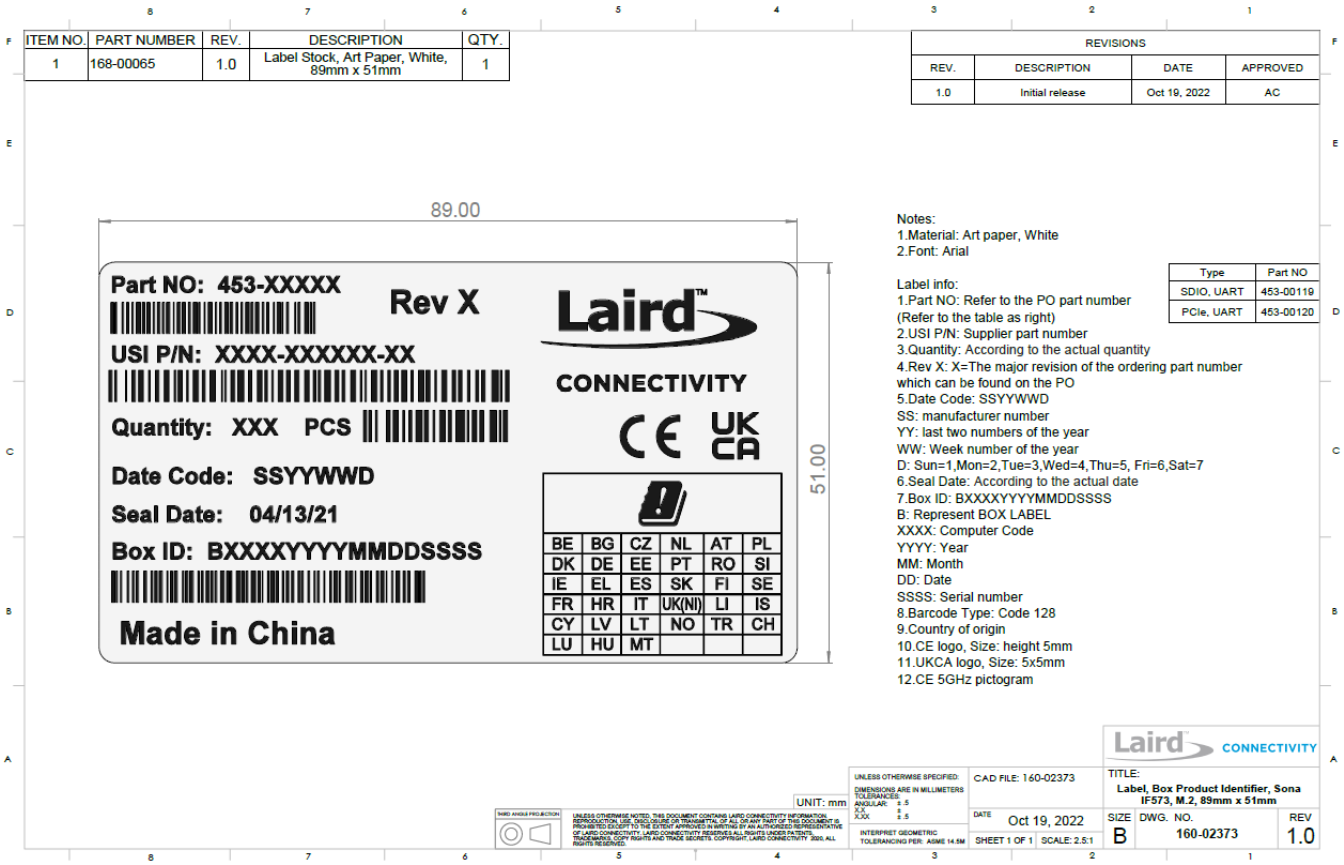

Figure 35: Sona IF573 M.2 2230 Bag and Box Product Identifier Label, 160-02373

The following label is located on the adjacent sides of the master carton.

PRELIM

© Copyright 2023 Laird Connectivity, Inc.
All Rights Reserved
Americas: +1-800-492-2320
Europe: +44-1628-858-940
Hong Kong: +852-2762-4823

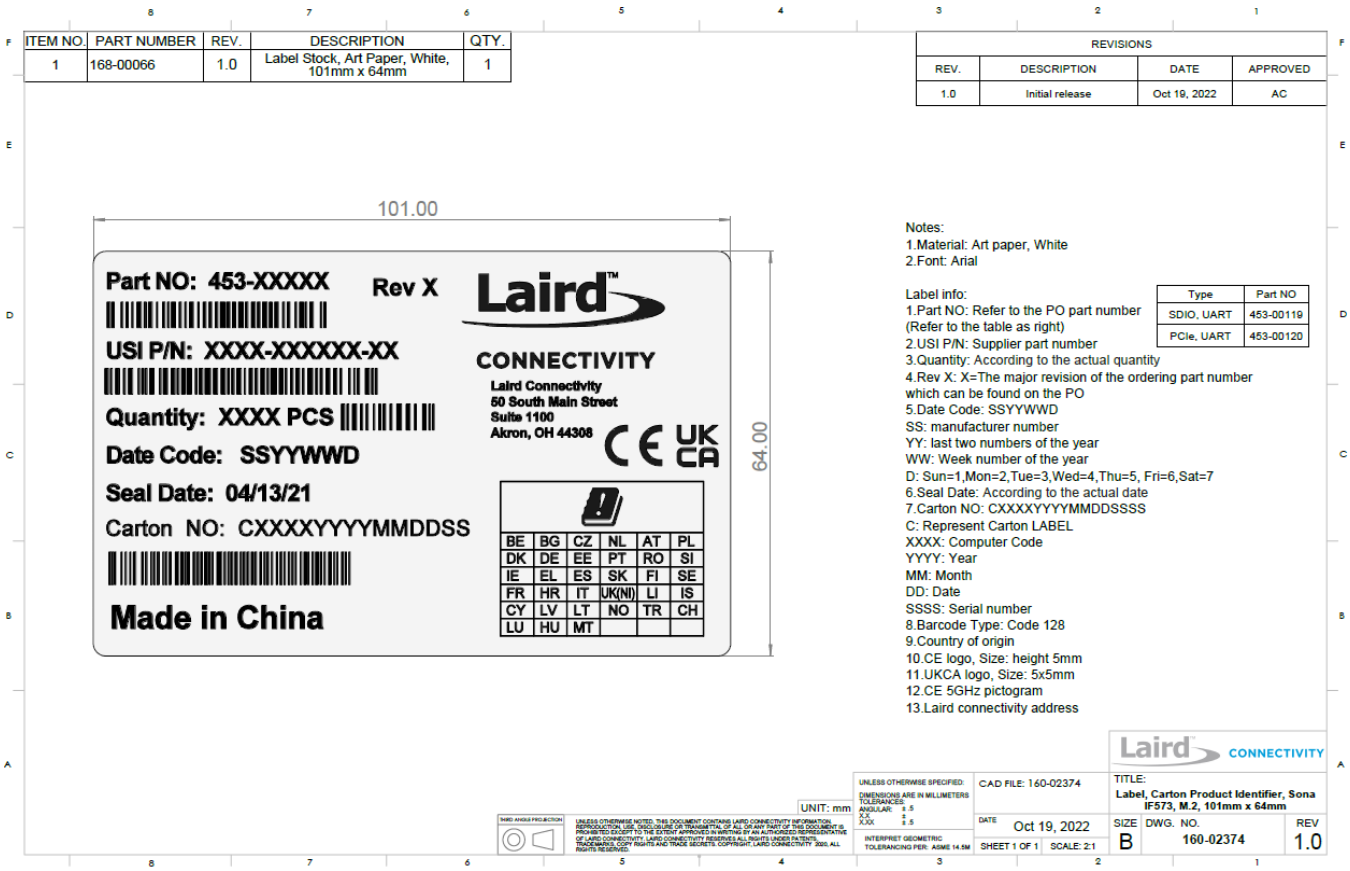

Figure 36: Sona IF573 M.2 2230 Carton Product Identifier Label, 160-02374

16.3 Required Storage Conditions

16.3.1 Prior to Opening the Dry Packing

The following are required storage conditions ***prior* to opening the dry packing**:

- Normal temperature: 5~40˚C
- Normal humidity: 80% (Relative humidity) or less
- Storage period: One year or less

Note: Humidity means relative humidity.

16.3.2 After Opening the Dry Packing

The following are required storage conditions ***after* opening the dry packing** (to prevent moisture absorption):

- Storage conditions for one-time soldering:
  - Temperature: 5-25°C
  - Humidity: 60% or less
  - Period: 72 hours or less after opening
- Storage conditions for two-time soldering
  - Storage conditions following opening and prior to performing the 1st reflow:
    - Temperature: 5-25°C
    - Humidity: 60% or less
    - Period: A hours or less after opening

PRELIM

© Copyright 2023 Laird Connectivity, Inc.
All Rights Reserved
Americas: +1-800-492-2320
Europe: +44-1628-858-940
Hong Kong: +852-2762-4823

- Storage conditions following completion of the 1st reflow and prior to performing the 2nd reflow
  - Temperature: 5-25°C
  - Humidity: 60% or less
  - Period: B hours or less after completion of the 1st reflow

Note: Should keep A+B within 72 hours.

16.3.3 Temporary Storage Requirements after Opening

The following are temporary storage requirements after opening:

- Only re-store the devices once prior to soldering.
- Use a dry box or place desiccant (with a blue humidity indicator) with the devices and perform dry packing again using vacuumed heat-sealing.

The following indicate the required storage period, temperature, and humidity for this temporary storage:

- Storage temperature and humidity:

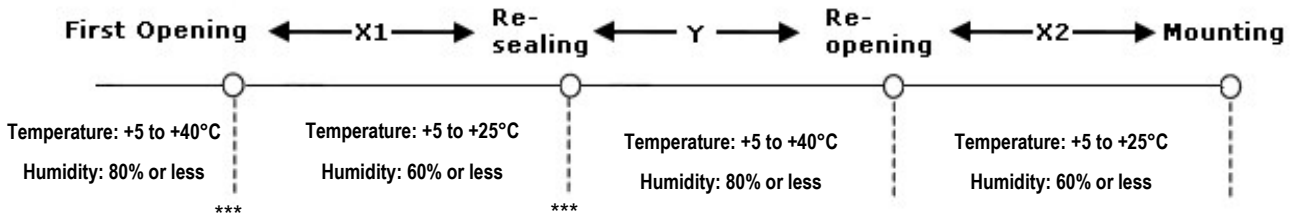

*** - External atmosphere temperature and humidity of the dry packing

- Storage period:
  - X1+X2 – Refer to After Opening the Dry Packing storage requirements. Keep is X1+X2 within 72 hours.
  - Y – Keep within two weeks or less.

16.4 Baking Conditions

Baking conditions and processes for the module follow the J-STD-033 standard which includes the following:

- The calculated shelf life in a sealed bag is 12 months at <40℃ and <80% relative humidity.
- Once the packaging is opened, the SiP must be mounted (per MSL4/Moisture Sensitivity Level 4) within 72 hours at <30˚C and <60% relative humidity.
- If the SiP is not mounted within 72 hours or if, when the dry pack is opened, the humidity indicator card displays >10% humidity, then the product must be baked for 48 hours at 125 ˚C (±5 ˚C).

PRELIMINARY

© Copyright 2023 Laird Connectivity, Inc.
All Rights Reserved
Americas: +1-800-492-2320
Europe: +44-1628-858-940
Hong Kong: +852-2762-4823

17 Surface Mount Conditions

The following soldering conditions are recommended to ensure device quality.

17.1 Recommended Stencil Aperture

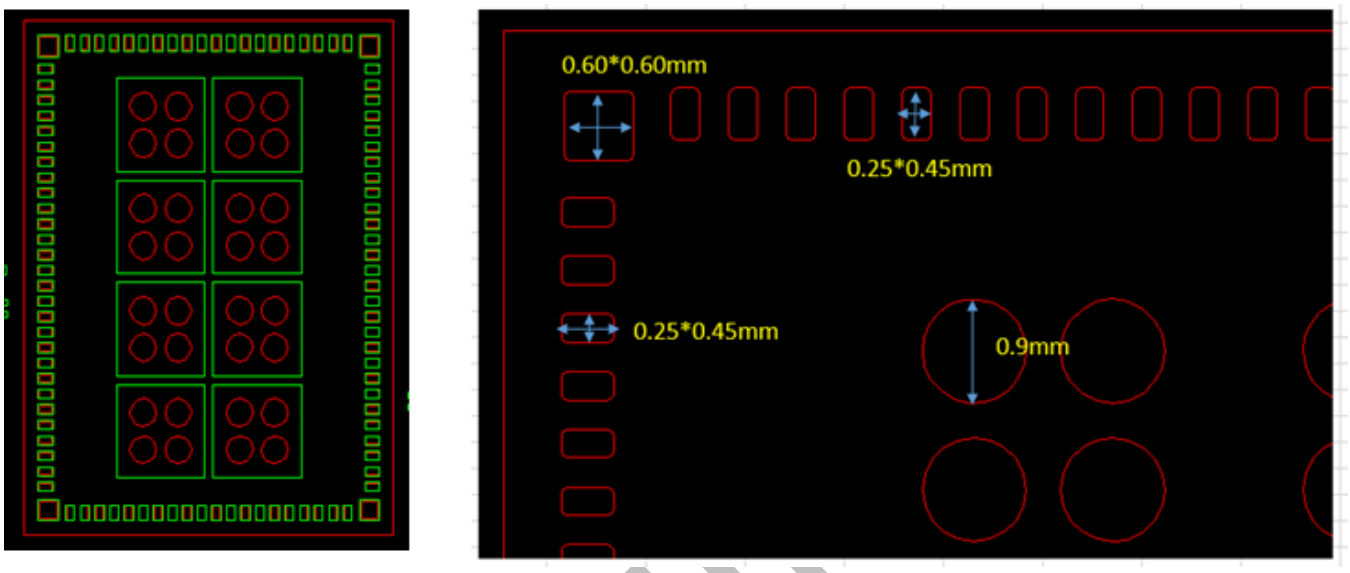

Figure 37: Sona IF573 M.2 1318 stencil aperture

Note: The stencil thickness is 0.12mm

PRELIMI

© Copyright 2023 Laird Connectivity, Inc.
All Rights Reserved
Americas: +1-800-492-2320
Europe: +44-1628-858-940
Hong Kong: +852-2762-4823

17.2 Soldering

Note: When soldering, the stencil thickness should be 0.12 mm.

Convection reflow or IR/Convection reflow (one-time soldering or two-time soldering in air or nitrogen environment)

Measuring point – IC package surface
Temperature profile:

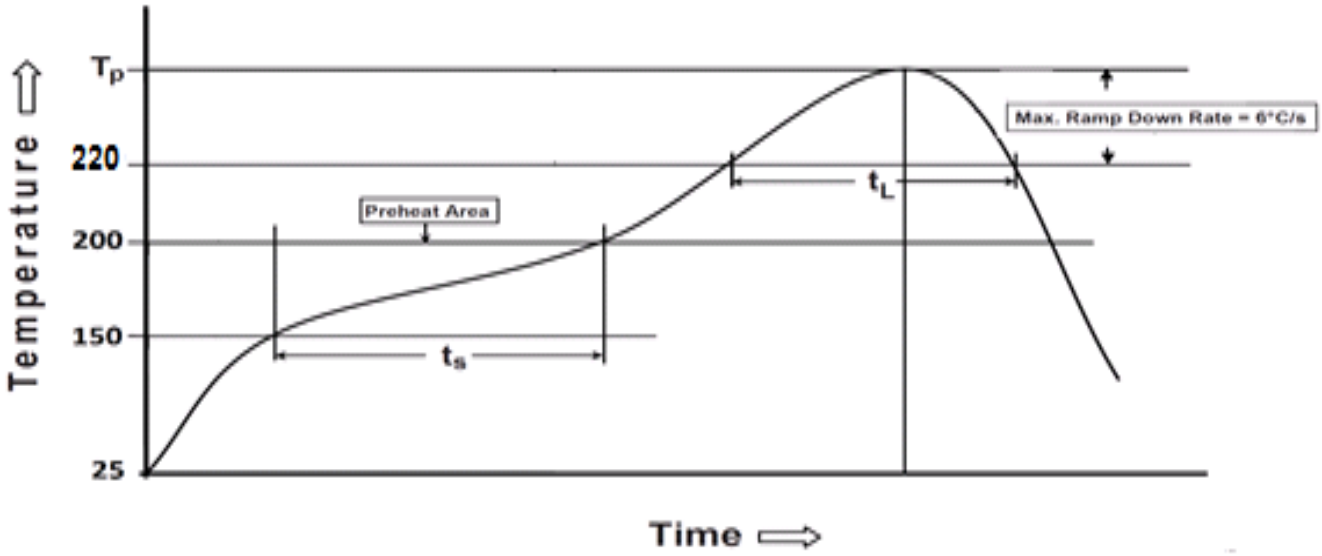

Figure 38: Temperature profile

- Solder paste alloy: SAC305(Sn96.5 / Ag3.0 / Cu 0.5)
- Pre-heat temperature: 150℃ ~ 200℃; Soak time: 60 second ~ 120 second
- Peak temperature: 235℃ ~ 250℃
- Time above 220℃: 40 second ~ 90 second
- Optimal cooling rate < 3℃/second
- The oxygen concentration < 2000 ppm

PRELIM

© Copyright 2023 Laird Connectivity, Inc.
All Rights Reserved
Americas: +1-800-492-2320
Europe: +44-1628-858-940
Hong Kong: +852-2762-4823

17.2.1 Cautions When Removing the M.2 1318 from the Platform for RMA

- Bake the platform before removing the Sona IF573 module from the platform. Reference Baking Conditions.
- Remove the Sona IF573 module by using a hot air gun. This process should be carried out by a skilled technician.

Recommended conditions:

- One-side component platform:
  - Set the hot plate at 280°C.
  - Put the platform on the hot plate for 8~10 seconds.
  - Remove the device from platform.
- Two-side components platform:
  - Use two hot air guns.
  - On the bottom, use a pre-heated nozzle (temp setting of 200~250°C) at a suitable distance from the platform PCB.
  - On the top, apply a remove nozzle (temp setting of 330°C). Heat until device can be removed from platform PCB.

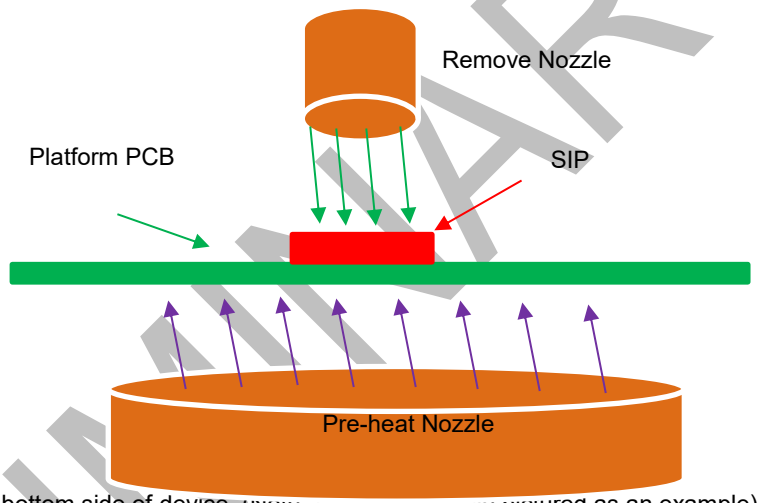

- Remove the residue solder under the bottom side of device. (Note: Alternate module pictured as an example)

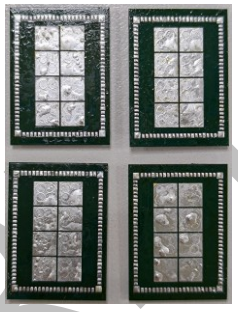

(Not accepted for RMA)

Figure 39: Example M.2 1318 with residue solder on the bottom

(Accepted for RMA analysis)

Figure 40: Sona IF573 module without residue solder

- Remove and clean the residue flux as needed.

17.2.2 Precautions for Use

- Opening/handling/removing must be done on an anti-ESD treated workbench. All workers must also have undergone anti-ESD treatment.
- The devices should be mounted within one year of the date of delivery.
- The Sona IF573 modules are MSL level 4 rated.

PRELIMINARY

© Copyright 2023 Laird Connectivity, Inc.
All Rights Reserved
Americas: +1-800-492-2320
Europe: +44-1628-858-940
Hong Kong: +852-2762-4823

18 Reliability Test

The Sona IF573 modules were tested for reliability. Test items and the corresponding standards are shown in Table 42.

18.1 Environmental and Mechanical

The following are the followed reliability test procedures.

Table 42: Sona IF573 M.2 1318 Solder-down Module Reliability Test Items and Standards

Test Item	Specification	Standard	Test Result
Step 1: Pre-conditioning	**Pre-check:** 1. Function check (Tools and SOP supplied by customers). 2. Mechanical check. **Pre-conditioning:** 1. Bake: 125°C for 24 hours. 2. Moisture Soak: 30°C/60% RH for 192 hours 3. Not shorter than 15 minutes and not longer than 4 hours after removal from the temperature/humidity chamber, subject the sample to 3 cycles of the reflow. **Post-check:** 1. Function check (Tools and SOP supplied by customers). 2. Mechanical check. 3. Perform inspections of short, open, delamination of DUTs by Optical Microscope (under 40X optical magnification). 4. X-RAY / CSAM (SAT) on any failed samples (Notify customers). 5. Cross-sections analysis based on X-RAY and CSAM results.	JESD22-A113	Pass
Step 2: Temperature Cycling Non-operating	1. Dwell on -40°C for 15 minutes 2. Shock to 85°C with in ramp rate 15 ℃/minute 3. Dwell on 85°C for 15 minutes 4. Shock to -40°C with in ramp rate 15 degree C/minute 5. Repeat step 1-4 and stop to check functions at 500/ 700 cycles	JESD22-A113	Pass
Vibration Non-operating Unpackaged device	1. Vibration Wave Form: Sine Waveform 2. Vibration frequency / Displacement: 20-80 Hz/1.5mm 3. Vibration frequency / Acceleration: 80-2000 Hz/20g 4. Cycle Time: 4 min/cycle 5. Number of Cycles: 4 cycle/axis 6. Vibration Axes: X, Y and Z (Rotate each axis on vertical vibration table)	JEDEC 22-B103B (2016)	Pass
Mechanical Shock Non-operating Unpackaged device	1. Pulse shape: Half-sine waveform 2. Impact acceleration: 1500 g 3. Pulse duration: 0.5 ms 4. Number of shocks: 30 shocks (5 shocks for each face) 5. Orientation: Bottom, top, left, right, front and rear faces	JEDEC 22-B110B.01 (2019)	Pass

PRELIMINARY

© Copyright 2023 Laird Connectivity, Inc.
All Rights Reserved
Americas: +1-800-492-2320
Europe: +44-1628-858-940
Hong Kong: +852-2762-4823

Table 43: Sona IF573 M.2 2230 E-Key Module Reliability Test Item and Standards

Test Item	Specification	Standard	Test Result
Thermal Shock	1. Temperature: -40 ~ 85℃ 2. Ramp time: Less than 10 seconds. 3. Dwell Time: 10 minutes 4. Number of Cycles: 500 times	*JESD22-A106 *IEC 60068-2-14 for dwell time and number of cycles	Pass
Vibration Non-operating Unpackaged device	1. Vibration Wave Form: Sine Waveform 2. Vibration frequency / Displacement: 20-80 Hz/1.5mm 3. Vibration frequency / Acceleration: 80-2000 Hz/20g 4. Cycle Time: 4 min/cycle 5. Number of Cycles: 4 cycle/axis 6. Vibration Axes：X, Y and Z (Rotate each axis on vertical vibration table)	JEDEC 22-B103B (2016)	Pass
Mechanical Shock Non-operating Unpackaged device	1. Pulse shape: Half-sine waveform 2. Impact acceleration: 1500 g 3. Pulse duration: 0.5 ms 4. Number of shocks: 30 shocks (5 shocks for each face) 5. Orientation: Bottom, top, left, right, front and rear faces	JEDEC 22-B110B.01 (2019)	Pass

18.2 Reliability Prediction

Test Item	Specification	Standard
Mean Time Between Failure (MTBF)	1. Normal Operating Temperature:45 ℃ 2. High Temperature: 85 ℃	Telcordia SR-332 Issue 4 (2016)

Laird Part Number	Environment	Test Result 45 ℃ (Hours)
453-00117R 453-00117C 453-00118R 453-00118C	Ground, Fixed, Uncontrolled Ground, Mobile	13,987,080.94 10,659,368.74

Laird Part Number	Environment	Test Result 85 ℃ (Hours)
453-00117R 453-00117C 453-00118R 453-00118C	Ground, Fixed, Uncontrolled Ground, Mobile	2,751,512.41 2,095,110.62

PRELIMI

© Copyright 2023 Laird Connectivity, Inc.
All Rights Reserved
Americas: +1-800-492-2320
Europe: +44-1628-858-940
Hong Kong: +852-2762-4823

Laird Part Number	Environment	Test Result 45 ℃ (Hours)
453-00119	Ground, Fixed, Uncontrolled	8,861,616.79
453-00120	Ground, Mobile	6,713,673.22

Laird Part Number	Environment	Test Result 85 ℃ (Hours)
453-00119	Ground, Fixed, Uncontrolled	1,752,775.15
453-00120	Ground, Mobile	1.327,284.04

PRELIMINARY

© Copyright 2023 Laird Connectivity, Inc.
All Rights Reserved
Americas: +1-800-492-2320
Europe: +44-1628-858-940
Hong Kong: +852-2762-4823

19 REGULATORY

Note: For complete regulatory information, refer to the Sona IF573 Regulatory Information document which is also available from the Sona IF573 product page.

The Sona IF573 holds current certifications in the following countries:

Country/Region	Regulatory ID
USA (FCC)	SQG-SONAIF573
EU	N/A
UKCA	N/A
Canada (ISED)	3147A-SONAIF573
Japan (MIC)	201-220656
Australia	N/A
New Zealand	N/A

19.1 Certified Antennas

The Sona IF573 module was tested with antennas listed in the following table. The OEM can choose a different manufacturer's antenna but must make sure it is of same type and that the gain is lesser than or equal to the antenna that is approved for use.

Manufacturer	Model	Laird Connectivity Part Number	Type	Connector	Peak Gain (dBi)		
					2.4 GHz	5 GHz	6 GHz
Laird Connectivity	FlexMIMO 6E	EFD2471A3S-10MH4L	PIFA	MHF4L	2.2	3.8	3.3
Laird Connectivity	FlexPIFA 6E	EFB2471A3S-10MH4L	PIFA	MHF4L	2.2	3.9	3.8
Laird Connectivity	Mini NanoBlade Flex 6 GHz	EMF2471A3S-10MH4L	PCB Dipole	MHF4L	2.4	4.4	5.2
JOYMAX	Dipole 6E	TWX-100BRSAX-2001	Dipole	RS-SMA	2	4.0	4.0

PRELIMINARY

© Copyright 2023 Laird Connectivity, Inc.
All Rights Reserved
Americas: +1-800-492-2320
Europe: +44-1628-858-940
Hong Kong: +852-2762-4823

20 BLUETOOTH SIG QUALIFICATION

20.1 Overview

The Sona IF573 Series module is listed on the Bluetooth SIG website as a qualified Controller Subsystem.

Design Name	Owner	Declaration ID	Link to listing on the SIG website
Sona IF573	Laird Connectivity	D057578	https://launchstudio.bluetooth.com/ListingDetails/158180

It is a mandatory requirement of the Bluetooth Special Interest Group (SIG) that every product implementing Bluetooth technology has a Declaration ID. Every Bluetooth design is required to go through the qualification process, even when referencing a Bluetooth Design that already has its own Declaration ID. The Qualification Process requires each company to register as a member of the Bluetooth SIG – www.bluetooth.org

The following is a link to the Bluetooth Registration page: https://www.bluetooth.org/login/register/

For each Bluetooth Design, it is necessary to purchase a Declaration ID. This can be done before starting the new qualification, either through invoicing or credit card payment. The fees for the Declaration ID will depend on your membership status, please refer to the following webpage:

https://www.bluetooth.org/en-us/test-qualification/qualification-overview/fees

For a detailed procedure of how to obtain a new Declaration ID for your design, please refer to the following SIG document, (login is required to views this document):

https://www.bluetooth.org/DocMan/handlers/DownloadDoc.ashx?doc_id=283698&vId=317486

20.2 Qualification Steps When Referencing a Laird Connectivity Controller Subsystem Design

To qualify your product when referencing a Laird Connectivity Controller Subsystem design, follow these steps:

1. To start a listing, go to: https://www.bluetooth.org/tpg/QLI_SDoc.cfm

   Note: A user name and password are required to access this site.

2. In step 1, select the option, New Listing and Reference a Qualified Design.
3. Enter D057578 in the Controller Subsystem table entry.
4. Enter your complimentary Host Subsystem and optional Profile Subsystem QDID in the table entry.
5. Select your pre-paid Declaration ID from the drop-down menu or go to the Purchase Declaration ID page.

   Note: Unless the Declaration ID is pre-paid or purchased with a credit card, you cannot proceed until the SIG invoice is paid.

6. Once all the relevant sections of step 1 are finished, complete steps 2, 3, and 4 as described in the help document accessible from the site.

Your new design will be listed on the SIG website and you can print your Certificate and DoC.

For further information please refer to the following training material:

https://www.bluetooth.org/en-us/test-qualification/qualification-overview/listing-process-updates

If you require assistance with the qualification process please contact our recommended Bluetooth Qualification Expert (BQE), Steve Flooks, steve.flooks@eurexuk.com.

PRELIMINARY

© Copyright 2023 Laird Connectivity, Inc.
All Rights Reserved
Americas: +1-800-492-2320
Europe: +44-1628-858-940
Hong Kong: +852-2762-4823

21 Additional Information

Please contact your local sales representative or our support team for further assistance:

Headquarters	Laird Connectivity 50 S. Main St. Suite 1100 Akron, OH 44308 USA
Phone	Americas: +1-800-492-2320 Europe: +44-1628-858-940 Hong Kong: +852-2762-4823
Website	www.lairdconnect.com/
Technical Support	www.lairdconnect.com/resources/support
Sales Contact	www.lairdconnect.com/contact

Note: Information contained in this document is subject to change.

Host manufacturers must follow the specific restriction listed in section below and section 3 of KDB 996369 D04 Module integration guide, to verify that the host product meets all the applicable rules.

PRELIMINARY

© Copyright 2023 Laird Connectivity, Inc.
All Rights Reserved

This equipment has been tested and found to comply with the limits for a Class B digital device, pursuant to Part 15 of the FCC Rules. These limits are designed to provide reasonable protection against harmful interference in a residential installation. This equipment generates, uses and can radiate radio frequency energy and, if not installed and used in accordance with the instructions, may cause harmful interference to radio communications. However, there is no guarantee that interference will not occur in a particular installation. If this equipment does cause harmful interference to radio or television reception, which can be determined by turning the equipment off and on, the user is encouraged to try to correct the interference by one of the following measures:

- Reorient or relocate the receiving antenna.
- Increase the separation between the equipment and receiver.
- Connect the equipment into an outlet on a circuit different from that to which the receiver is connected.
- Consult the dealer or an experienced radio/TV technician for help.

FCC Caution: Any changes or modifications not expressly approved by the party responsible for compliance could void the user's authority to operate this equipment.

This device complies with Part 15 of the FCC Rules. Operation is subject to the following two conditions: (1) This device may not cause harmful interference, and (2) this device must accept any interference received, including interference that may cause undesired operation.

IMPORTANT NOTE:

Radiation Exposure Statement:

This equipment complies with FCC radiation exposure limits set forth for an uncontrolled environment. This equipment should be installed and operated with minimum distance 20cm between the radiator & your body.

This transmitter must not be co-located or operating in conjunction with any other antenna or transmitter.

Country Code selection feature to be disabled for products marketed to the US/CANADA

1. The module is instructed that the module can only be installed in an indoor client device which is limited to indoor locations and is under control of a low-power indoor access points (6ID) or subordinate (6PP). An indoor client device with a direct connection to the internet cannot source the internet to other access points, clients or subordinate devices. Indoor client devices are prohibited from connecting directly to any another client device.
2. Operation of transmitters in the 5.925-7.125 GHz band is prohibited for control of or communications with unmanned aircraft systems.

PRELIMINARY

© Copyright 2023 Laird Connectivity, Inc.
All Rights Reserved
Americas: +1-800-492-2320
Europe: +44-1628-858-940
Hong Kong: +852-2762-4823

Integration instructions for host product manufacturers

Applicable FCC rules to module

FCC Part 15.247

Summarize the specific operational use conditions

The module is must be installed in mobile device.

This device is intended only for OEM integrators under the following conditions:

1) The antenna must be installed such that 20 cm is maintained between the antenna and users, and

2) The transmitter module may not be co-located with any other transmitter or antenna

As long as 2 conditions above are met, further transmitter test will not be required. However, the OEM integrator is still responsible for testing their end-product for any additional compliance requirements required with this module installed.

IMPORTANT NOTE: In the event that these conditions can not be met (for example certain laptop configurations or co-location with another transmitter), then the FCC authorization is no longer considered valid and the FCC ID can not be used on the final product. In these circumstances, the OEM integrator will be responsible for re-evaluating the end product (including the transmitter) and obtaining a separate FCC authorization. The OEM integrator has to be aware not to provide information to the end user regarding how to install or remove this RF module in the user's manual of the end product which integrates this module.

The end user manual shall include all required regulatory information/warning as show in this manual.

Limited module procedures

Not applicable

Trace antenna designs

It is applicable for Part No. 453-00118 only. Refers to page 87/95 ~ 95/95

RF exposure considerations

Co-located issue shall be met as mentioned in "Summarize the specific operational use conditions".

Product manufacturer shall provide below text in end-product manual

"Radiation Exposure Statement:

The product comply with the US portable RF exposure limit set forth for an uncontrolled environment and are safe for intended operation as described in this manual. The further RF exposure reduction can be achieved if the product can be kept as far as possible from the user body or set the device to lower output power if such function is available.."

Antennas

PRELIMINARY

© Copyright 2023 Laird Connectivity, Inc.
All Rights Reserved
Americas: +1-800-492-2320
Europe: +44-1628-858-940
Hong Kong: +852-2762-4823

Ant. No.	Manufacturer	Model	Part Number	Type	Connector	Operating Frequencies / Gain (dBi)		
						2.4GHz	5GHz	6GHz
1	JOYMAX	TWX-100B RSAX-2001	NA	Dipole	RP-SMA	2	4	4
2	Laird	FlexMIMO 6E	EFD2471A3 S-10MH4L	PIFA	MHF4L	2.2	3.8	3.3
3	Laird	Mini NanoBlade Flex 6 GHz	EMF2471A 3S-10MH4L	PCB Dipole	MHF4L	2.4	4.4	5.2
4	Laird	FlexPIFA 6E	EFB2471A3 S-10MH4L	PIFA	MHF4L	2.2	3.9	3.8

Label and Compliance Information

Product manufacturers need to provide a physical or e-label stating

"Contains FCC ID: SQG-SONAIF573" with finished product

Information on Test Modes and Additional Testing Requirements

Test tool: wltool

Additional Testing, Part 15 Subpart B Disclaimer

The module is only FCC authorized for the specific rule parts listed on the grant, and that the host product manufacturer is responsible for compliance to any other FCC rules that apply to the host not covered by the modular transmitter grant of certification. The final host product still requires Part 15 Subpart B compliance testing with the modular transmitter installed

PRELIMINARY

This device contains licence-exempt transmitter(s)/receiver(s) that comply with Innovation, Science and Economic Development Canada's licence-exempt RSS(s). Operation is subject to the following two conditions:

(1) This device may not cause interference
(2) This device must accept any interference, including interference that may cause undesired operation of the device

© Copyright 2023 Laird Connectivity, Inc.
All Rights Reserved
Americas: +1-800-492-2320
Europe: +44-1628-858-940
Hong Kong: +852-2762-4823

L'émetteur/récepteur exempt de licence contenu dans le présent appareil est conforme aux CNR d'Innovation, Sciences et Développement économique Canada applicables aux appareils radio exempts de licence. L'exploitation est autorisée aux deux conditions suivantes :
(1) L'appareil ne doit pas produire de brouillage;
(2) L'appareil doit accepter tout brouillage radioélectrique subi, même si le brouillage est susceptible d'en compromettre le fonctionnement.

This radio transmitter [IC: 3147A-SONAIF573] has been approved by Innovation, Science and Economic Development Canada to operate with the antenna types listed below, with the maximum permissible gain indicated. Antenna types not included in this list that have a gain greater than the maximum gain indicated for any type listed are strictly prohibited for use with this device.

Le présent émetteur radio [IC: 3147A-SONAIF573] a été approuvé par Innovation, Sciences et Développement économique Canada pour fonctionner avec les types d'antenne énumérés ci-dessous et ayant un gain admissible maximal. Les types d'antenne non inclus dans cette liste, et dont le gain est supérieur au gain maximal indiqué pour tout type figurant sur la liste, sont strictement interdits pour l'exploitation de l'émetteur.

Ant. No.	Manufacturer	Model	Part Number	Type	Connector	Operating Frequencies / Gain (dBi)		
						2.4GHz	5GHz	6GHz
1	JOYMAX	TWX-100B RSAX-2001	NA	Dipole	RP-SMA	2	4	4
2	Laird	FlexMIMO 6E	EFD2471A3 S-10MH4L	PIFA	MHF4L	2.2	3.8	3.3
3	Laird	Mini NanoBlade Flex 6 GHz	EMF2471A 3S-10MH4L	PCB Dipole	MHF4L	2.4	4.4	5.2
4	Laird	FlexPIFA 6E	EFB2471A3 S-10MH4L	PIFA	MHF4L	2.2	3.9	3.8

PRELIMINARY

© Copyright 2023 Laird Connectivity, Inc.
All Rights Reserved
Americas: +1-800-492-2320
Europe: +44-1628-858-940
Hong Kong: +852-2762-4823

Radiation Exposure Statement:

This equipment complies with Canada radiation exposure limits set forth for an uncontrolled environment. This equipment should be installed and operated with minimum distance 20cm between the radiator & your body.

Déclaration d'exposition aux radiations:
Cet équipement est conforme Canada limites d'exposition aux radiations dans un environnement non contrôlé. Cet équipement doit être installé et utilisé à distance minimum de 20cm entre le radiateur et votre corps.

1) The transmitter module may not be co-located with any other transmitter or antenna.

As long as 1 condition above are met, further transmitter test will not be required. However, the OEM integrator is still responsible for testing their end-product for any additional compliance requirements required with this module installed.

1) Le module émetteur peut ne pas être coïmplanté avec un autre émetteur ou antenne.

Tant que les 1 condition ci-dessus sont remplies, des essais supplémentaires sur l'émetteur ne seront pas nécessaires. Toutefois, l'intégrateur OEM est toujours responsable des essais sur son produit final pour toutes exigences de conformité supplémentaires requis pour ce module installé.

IMPORTANT NOTE:

In the event that these conditions can not be met (for example certain laptop configurations or co-location with another transmitter), then the Canada authorization is no longer considered valid and the IC ID can not be used on the final product. In these circumstances, the OEM integrator will be responsible for re-evaluating the end product (including the transmitter) and obtaining a separate Canada authorization.

NOTE IMPORTANTE:

Dans le cas où ces conditions ne peuvent être satisfaites (par exemple pour certaines configurations d'ordinateur portable ou de certaines co-localisation avec un autre émetteur), l'autorisation du Canada n'est plus considéré comme valide et l'ID IC ne peut pas être utilisé sur le produit final. Dans ces circonstances, l'intégrateur OEM sera chargé de réévaluer le produit final (y compris l'émetteur) et l'obtention d'une autorisation distincte au Canada.

End Product Labeling

The final end product must be labeled in a visible area with the following: “Contains IC: 3147A-SONAIF573”.

Plaque signalétique du produit final

Le produit final doit être étiqueté dans un endroit visible avec l'inscription suivante: "Contient des IC: 3147A-SONAIF573".

Manual Information To the End User

The OEM integrator has to be aware not to provide information to the end user regarding how to install or remove this RF module in the user’s manual of the end product which integrates this module.

PRELIMINARY

© Copyright 2023 Laird Connectivity, Inc.
All Rights Reserved
Americas: +1-800-492-2320
Europe: +44-1628-858-940
Hong Kong: +852-2762-4823

The end user manual shall include all required regulatory information/warning as show in this manual.

Manuel d'information à l'utilisateur final

L'intégrateur OEM doit être conscient de ne pas fournir des informations à l'utilisateur final quant à la façon d'installer ou de supprimer ce module RF dans le manuel de l'utilisateur du produit final qui intègre ce module. Le manuel de l'utilisateur final doit inclure toutes les informations réglementaires requises et avertissements comme indiqué dans ce manuel.

PRELIMINARY

Laird Connectivity's products are subject to standard Terms & Conditions.

www.lairdconnect.com

© Copyright 2023 Laird Connectivity. All Rights Reserved. Patent pending. Any information furnished by Laird Connectivity and its agents is believed to be accurate and reliable. All specifications are subject to change without notice. Responsibility for the use and application of Laird Connectivity materials or products rests with the end user since Laird Connectivity and its agents cannot be aware of all potential uses. Laird Connectivity makes no warranties as to non-infringement nor as to the fitness, merchantability, or sustainability of any Laird Connectivity materials or products for any specific or general uses. Laird Connectivity or any of its affiliates or agents shall not be liable for incidental or consequential damages of any kind. All Laird Connectivity products are sold pursuant to the Laird Connectivity Terms and Conditions of Sale in effect from time to time, a copy of which will be furnished upon request. Nothing herein provides a license under any Laird Connectivity or any third-party intellectual property right.

© Copyright 2023 Laird Connectivity, Inc.
All Rights Reserved
Americas: +1-800-492-2320
Europe: +44-1628-858-940
Hong Kong: +852-2762-4823

4 RF Antenna Circuits

The antenna circuits are including two Wi-Fi RF circuit and one Bluetooth RF circuit on the Sona IF573-M2 wireless card, and these circuits design is shown on the Figure 2.

The all J1, J2 and J3 are antenna ports with MHF4 connector type.

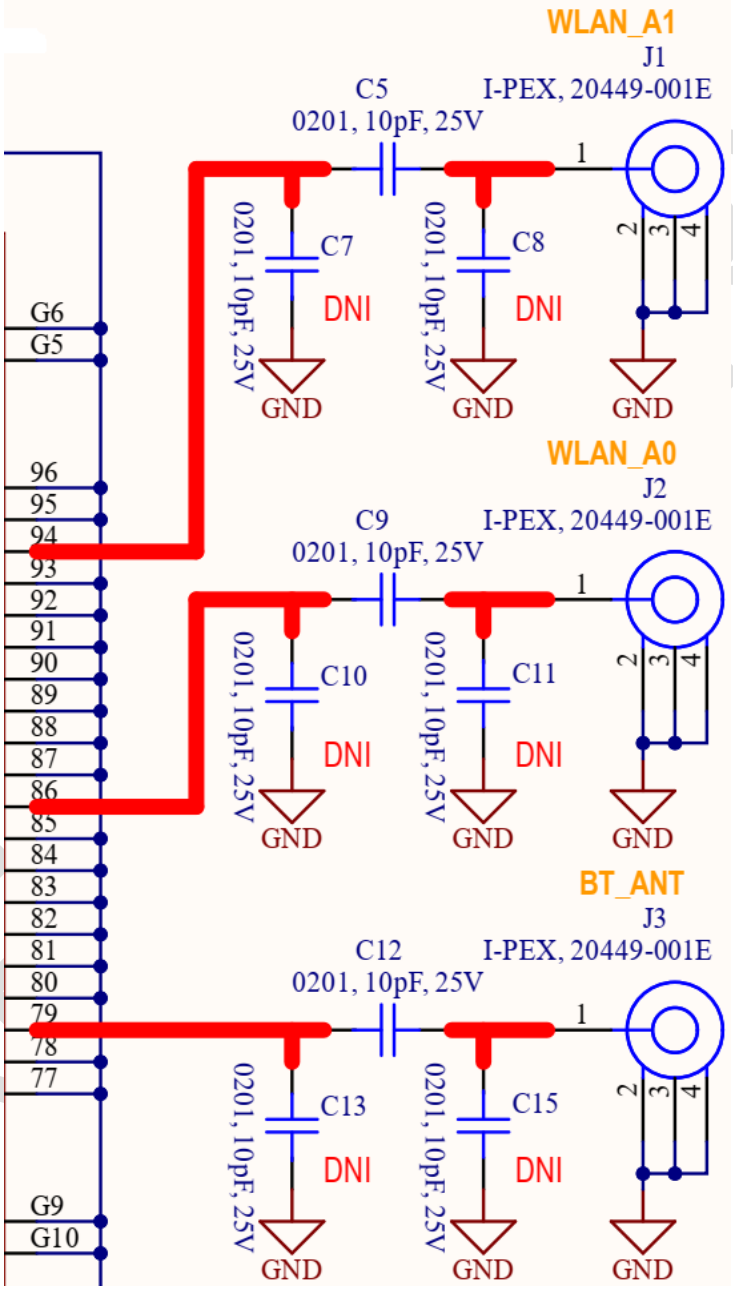

Figure 2. The RF antenna circuit of the Sona IF573-M2 wireless card

In according the Figure 2 circuit, for the Wi-Fi antenna circuit are composed of C5, C7, C8, C9, C10, and C11. As for the Bluetooth antenna circuit is composed of C12, C13 and C15. The parts that don't to be installed are marked with a red cross symbol.

© Copyright 2023 Laird Connectivity, Inc.
All Rights Reserved
Americas: +1-800-492-2320
Europe: +44-1628-858-940
Hong Kong: +852 2923 0610

5 PCBA EXPLANATION

The Figure 3 shows the PCBA explanation of the Sona IF573-M2 board, which the Sona IF573-ST module is marked with yellow rectangle and the antenna circuits section is marked by the two red polygon areas.

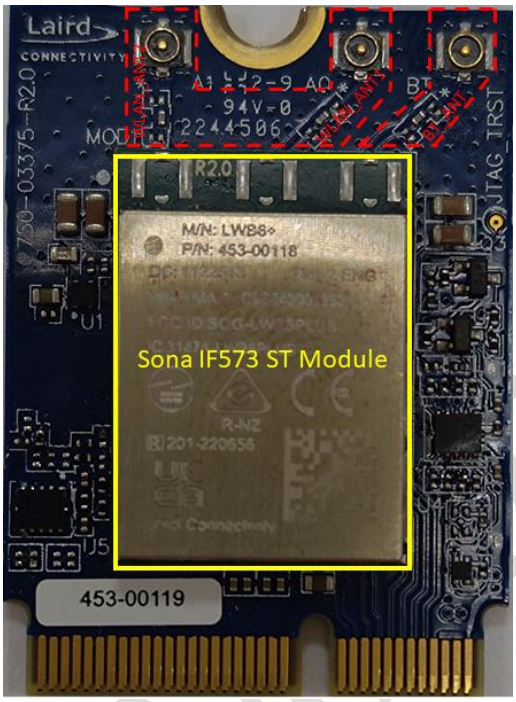

Figure 3. The PCBA of the Sona IF573-M2 wireless card

6 PCB LAYOUTPCB LAYERS AND STACK

The Sona IF573-M2 board is a 4 layers PCB design that it's based on the FR-4 substrate with the dielectric constant εr = 4.04. And the PCB thickness must be following the M.2 standard – 0.8 mm ±0.08 mm. The Figure 4 is showing the PCB stack and layer defines.

#	Name	Material	Type	Weight	Thickness	Dk
	Top Overlay		Overlay			
	Top Solder	Solder Resist	Solder Mask		0.9mil	3.5
1	Top Layer		Signal	1oz	1.69mil	
	Dielectric 1	Prepreg	Prepreg		5.85mil	4.04
2	L2		Signal	1/3oz	0.472mil	
	Dielectric2	FR-4	Core		13.78mil	4
3	L3		Signal	1/3oz	0.472mil	
	Dielectric 2	Prepreg	Prepreg		5.85mil	4.04
4	Bottom Layer		Signal	1oz	1.69mil	
	Bottom Solder	Solder Resist	Solder Mask		0.9mil	3.5
	Bottom Overlay		Overlay			

Figure 4. The 4 layers stack defines of the Sona IF573-M2 wireless card

PRELIMINARY

© Copyright 2023 Laird Connectivity, Inc.
All Rights Reserved
Americas: +1-800-492-2320
Europe: +44-1628-858-940
Hong Kong: +852 2923 0610

6.1 RF Traces Impedance Control

A 50 Ω impedance control is necessary for the all of RF traces on the Sona IF573-M2 board. Based on the Figure 4 PCB stack defines, the reference plane of the 50 Ω is the layer 2, therefore, the RF width and space with copper is 9.5mil / 10 mil, the Figure 5 shows the RF trace width defined in the layout rule.

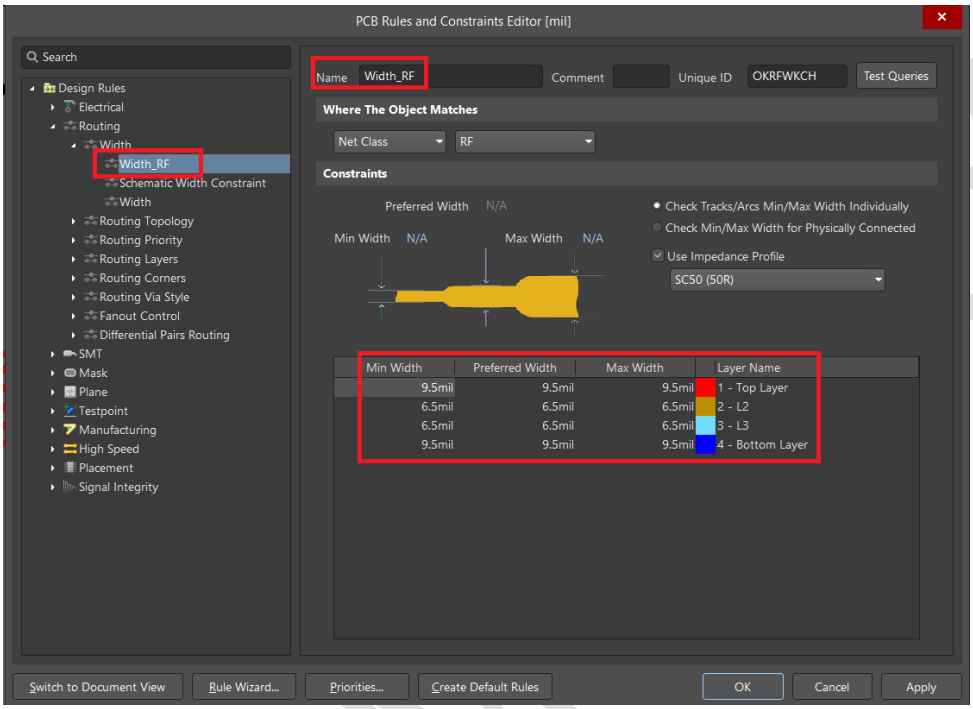

Figure 5. RF traces width defines in the layout rule

The Figure 6 shows the traces spacing with different objects, including copper, via, trace, …and so on. In the case, the spacing with the "copper" objects is the most important.

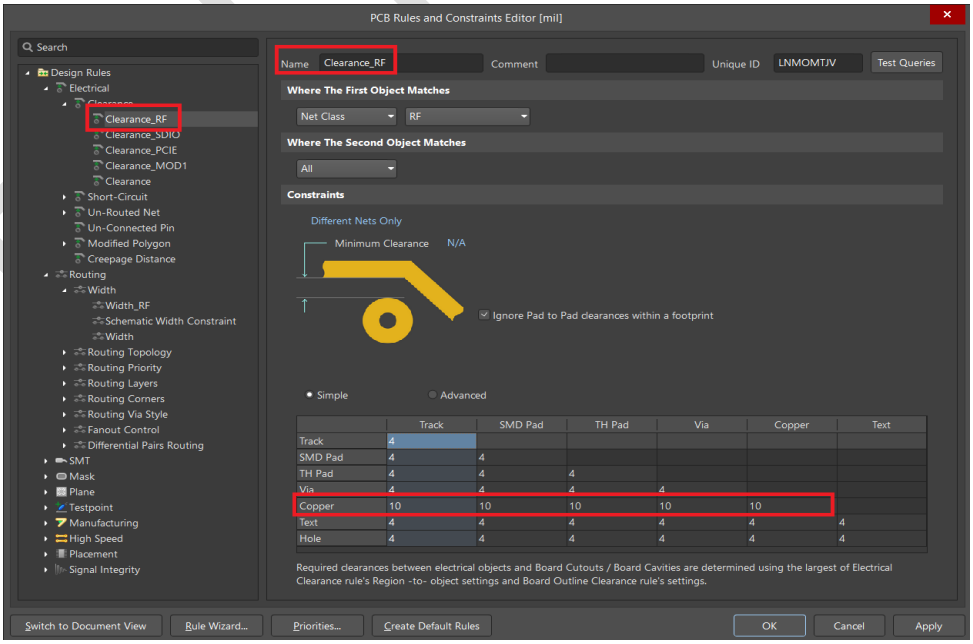

Figure 6. RF traces spacing with the copper

© Copyright 2023 Laird Connectivity, Inc.
All Rights Reserved
Americas: +1-800-492-2320
Europe: +44-1628-858-940
Hong Kong: +852 2923 0610

6.2 PCB Layout Placement

The Figure 7 shows the PCB layout placement of the Wi-Fi and Bluetooth (BT) antenna circuits [Note 1].

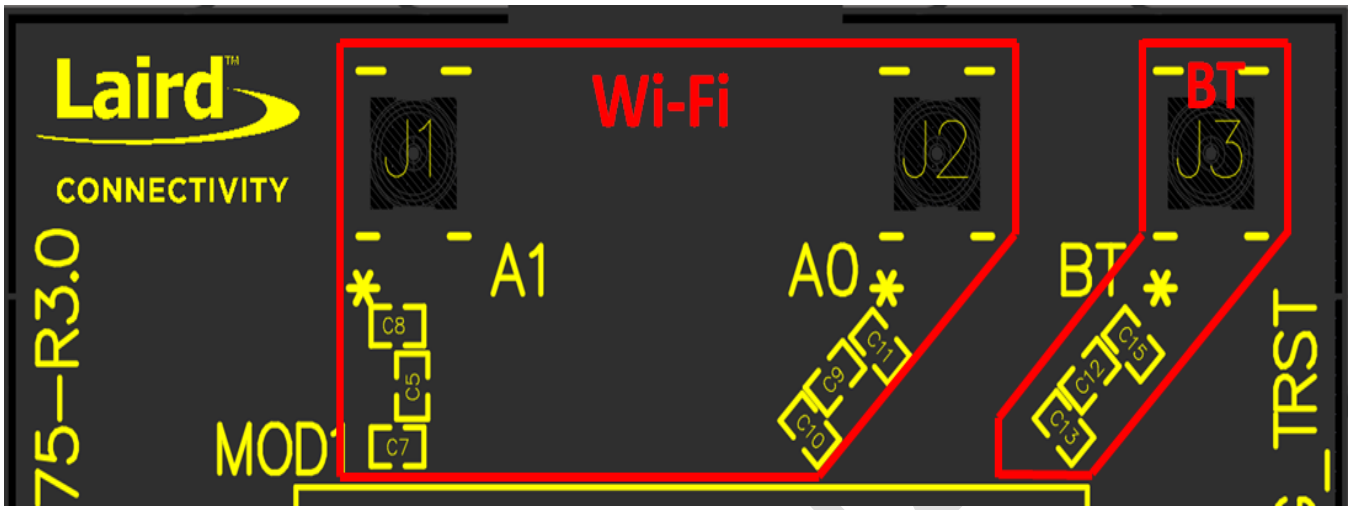

Figure 7. The Wi-Fi and BT antenna circuits placement

Note 1: Only displayed the designator of the Wi-Fi and Bluetooth (BT) antenna circuit, non-RF circuit just shows the parts outline only.

6.3 RF Traces Routing

The Figure 8 shows the RF traces routing of the Wi-Fi and Bluetooth antenna circuits on the PCB top layer. The all of RF traces have been marked with green polygon.

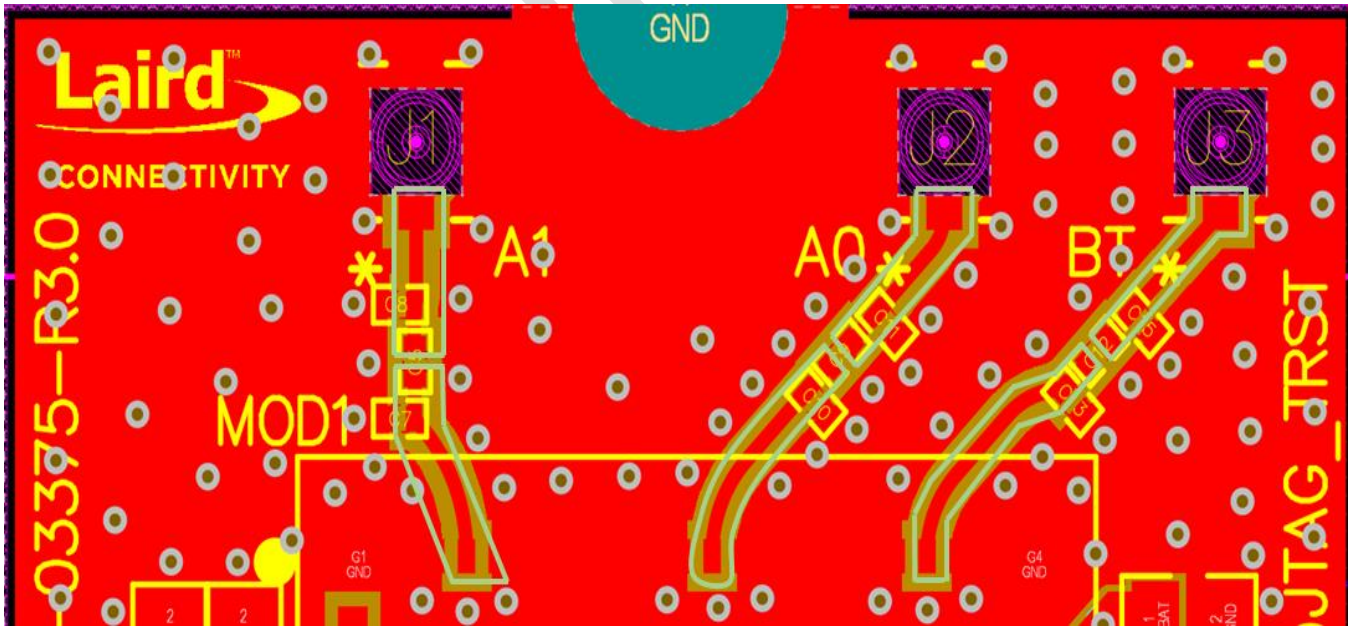

Figure 8. The RF traces routing is marked with the green rectangle

© Copyright 2023 Laird Connectivity, Inc.
All Rights Reserved
Americas: +1-800-492-2320
Europe: +44-1628-858-940
Hong Kong: +852 2923 0610

The Figure 9 shows the RF traces routing dimensions of the top layer and all J1, J2 and J3 MHF4 connector positions.

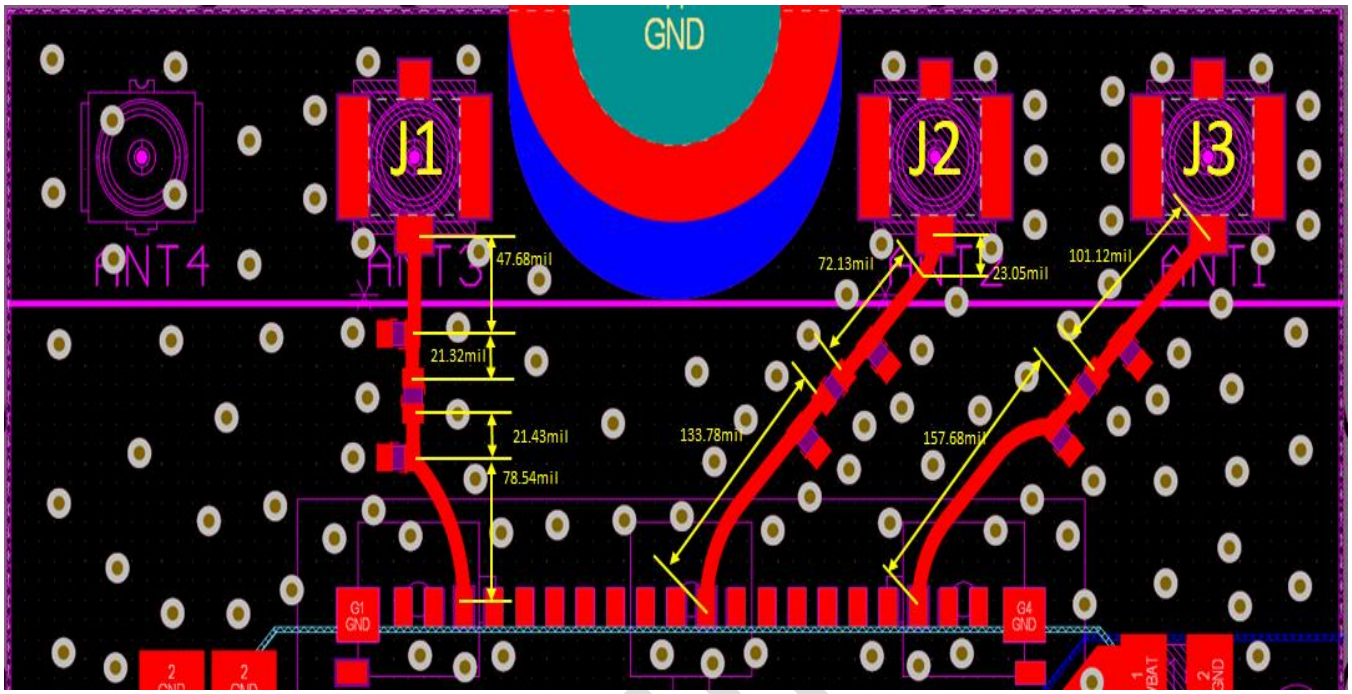

Figure 9. The RF traces routing dimension of the top layer

The Figure 10 shows all J1, J2 and J3 connectors of keep out area dimension.

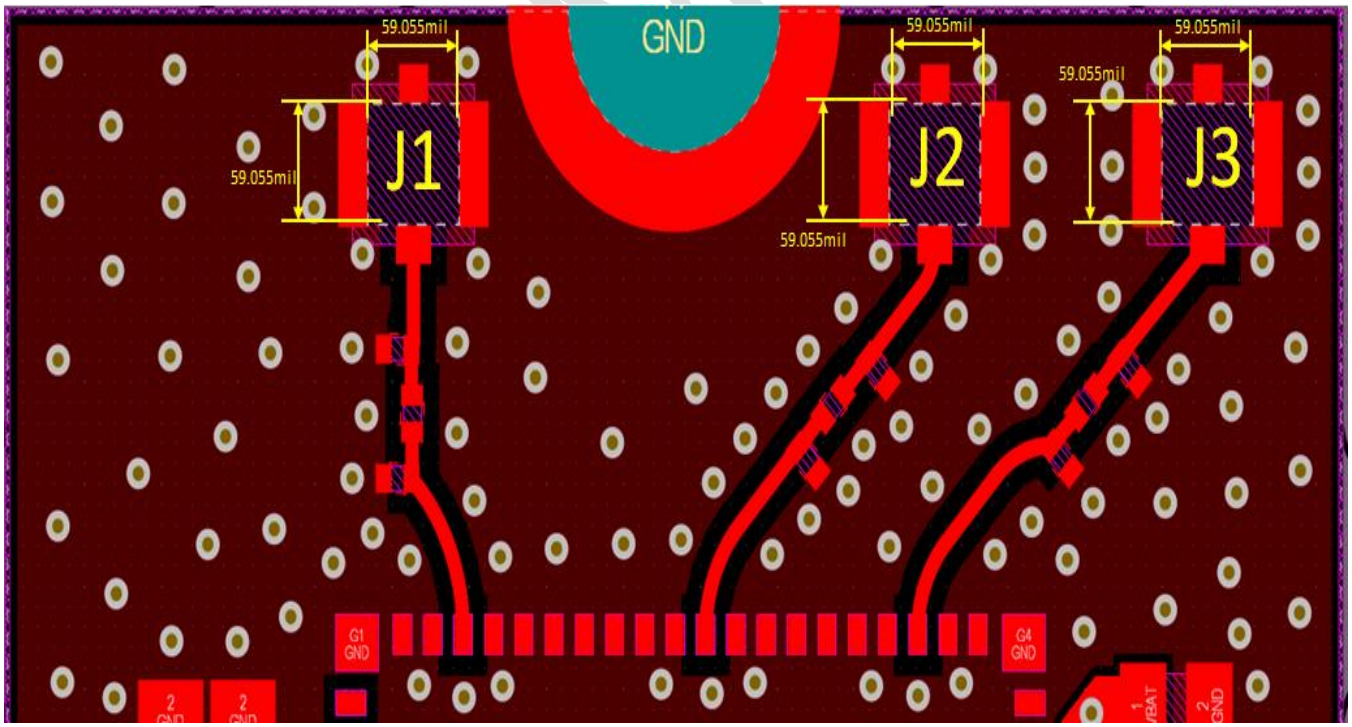

Figure 10. The J1, J2 and J3 MHF4 connectors of keep out aera dimension.

© Copyright 2023 Laird Connectivity, Inc.
All Rights Reserved
Americas: +1-800-492-2320
Europe: +44-1628-858-940
Hong Kong: +852 2923 0610

The Figure 11 shows the layer 2 (The reference plane of the 50 Ω impedance) routing of a completed copper with the ground signal. For this L2 layer, the J1, J2 and J3 MHF4 connectors all require their own keep out areas.

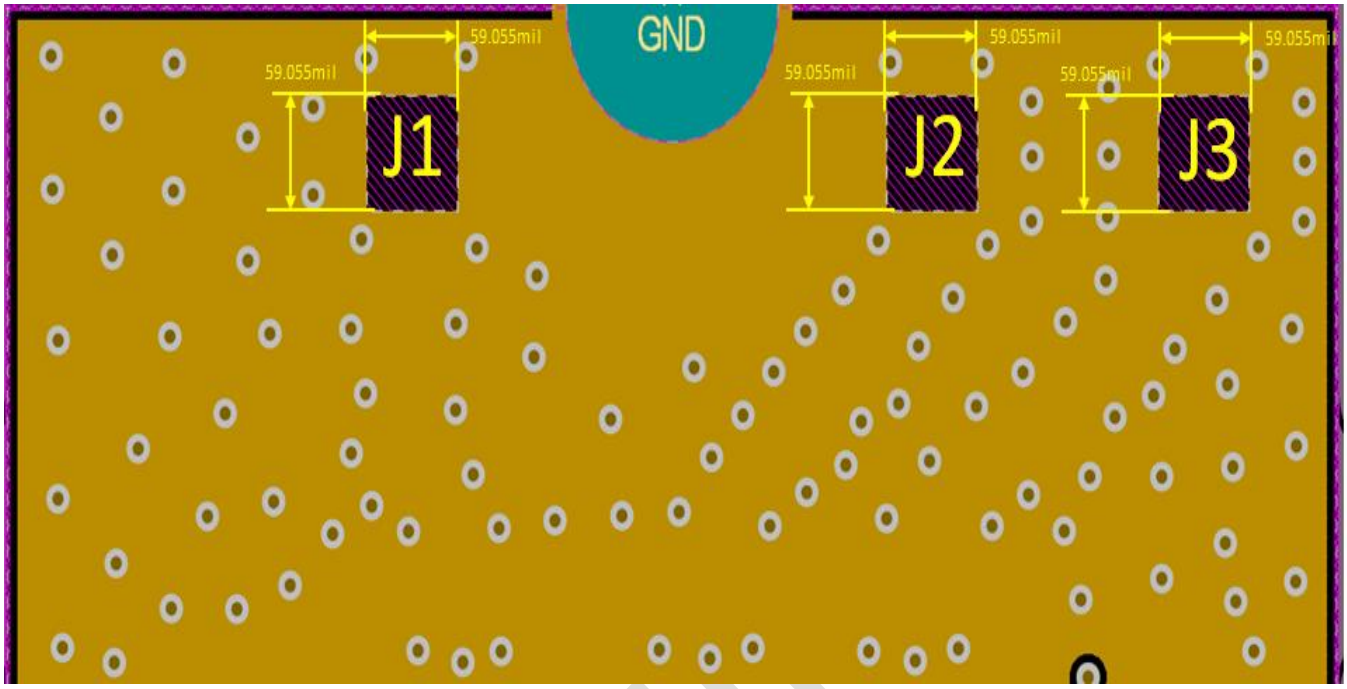

Figure 11. The keep out area dimensions for all MHF4 connectors on the Layer 2

The Figure 12 shows the keep out area dimension of the layer 3 for all J, J2 and J3.

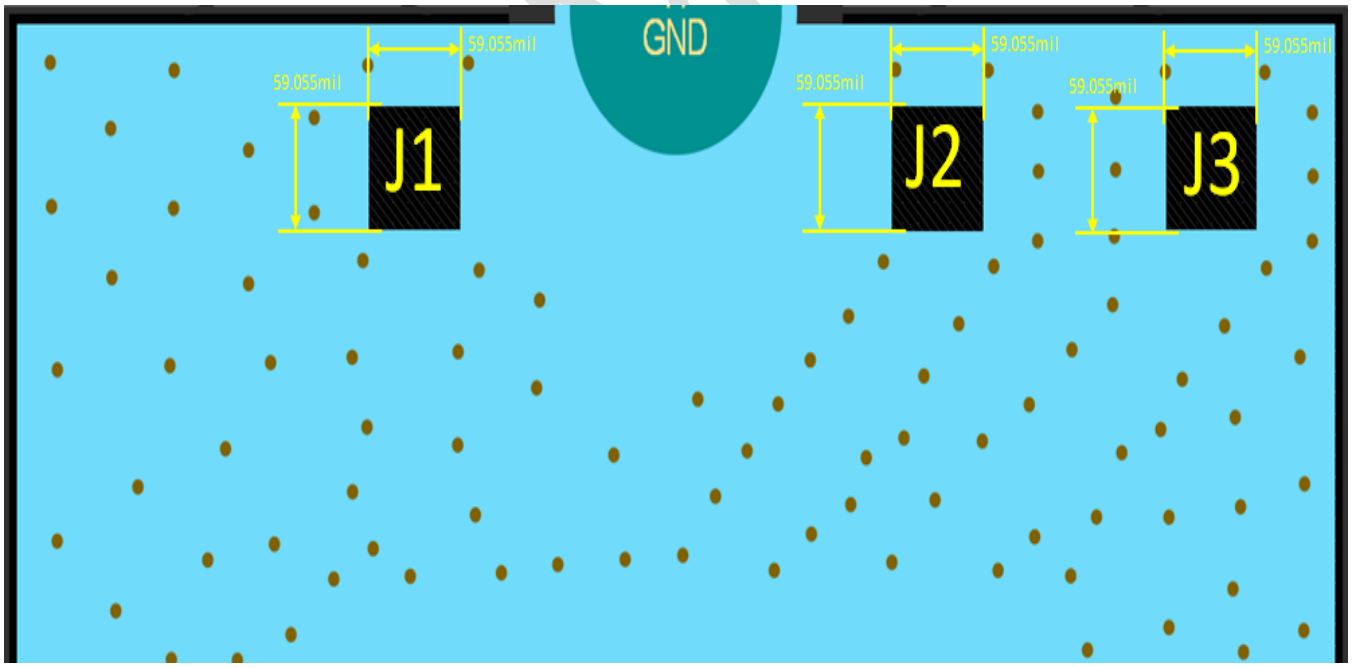

Figure 12. The keep out area dimension of the layer 3

© Copyright 2023 Laird Connectivity, Inc.
All Rights Reserved
Americas: +1-800-492-2320
Europe: +44-1628-858-940
Hong Kong: +852 2923 0610

The Figure 13 shows the keep out area dimension of the bottom layer for all J, J2 and J3.

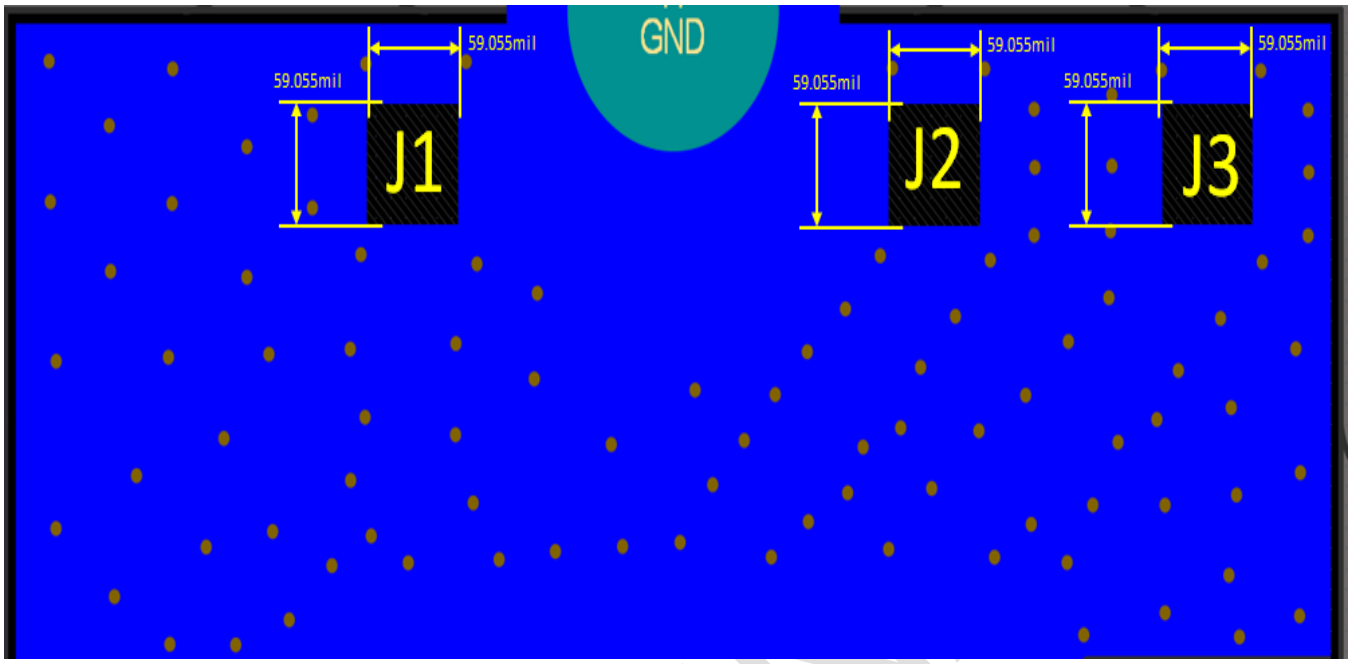

Figure 13. The keep out area dimension of the bottom layer

PRELIMINARY

© Copyright 2023 Laird Connectivity, Inc.
All Rights Reserved
Americas: +1-800-492-2320
Europe: +44-1628-858-940
Hong Kong: +852 2923 0610

7 PCB GERBER FILE

The Figure 14~17shows the GEREBR file of the Sona IF573-M2 wireless card.

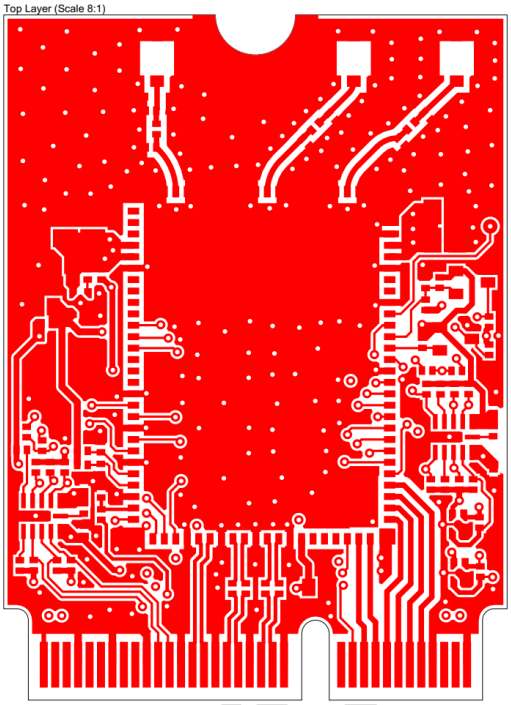

Figure 14. The top Layer GERBER

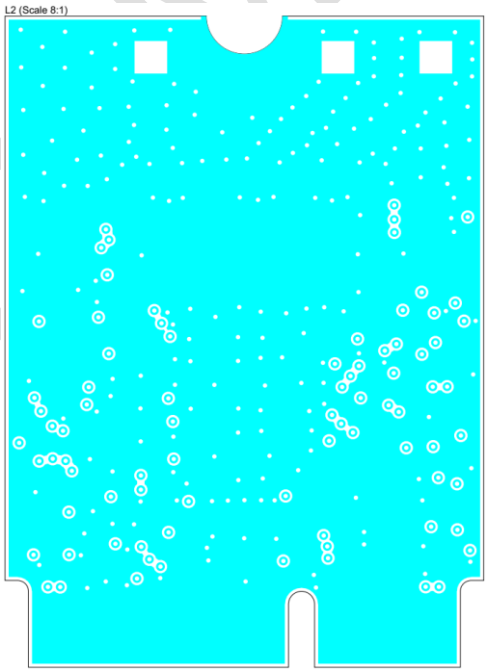

Figure 15. The layer 2 GERBER

PRELIMINARY

© Copyright 2023 Laird Connectivity, Inc.
All Rights Reserved
Americas: +1-800-492-2320
Europe: +44-1628-858-940
Hong Kong: +852 2923 0610

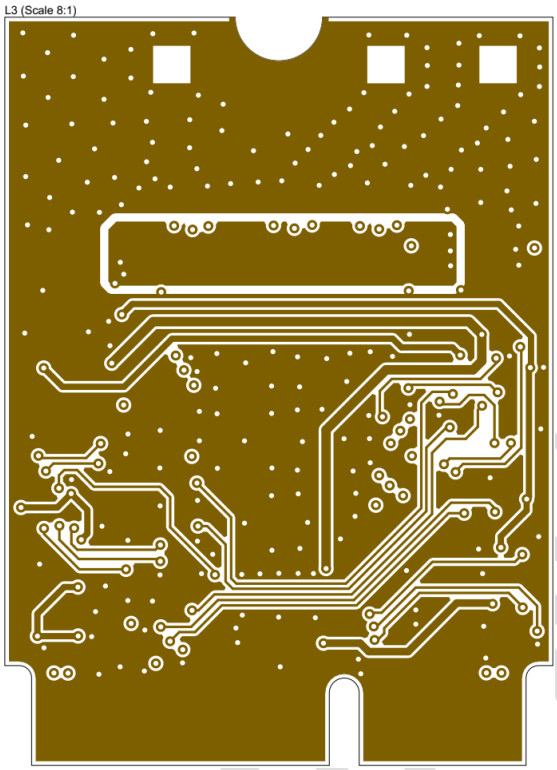

Figure 16. The layer 3 GERBER

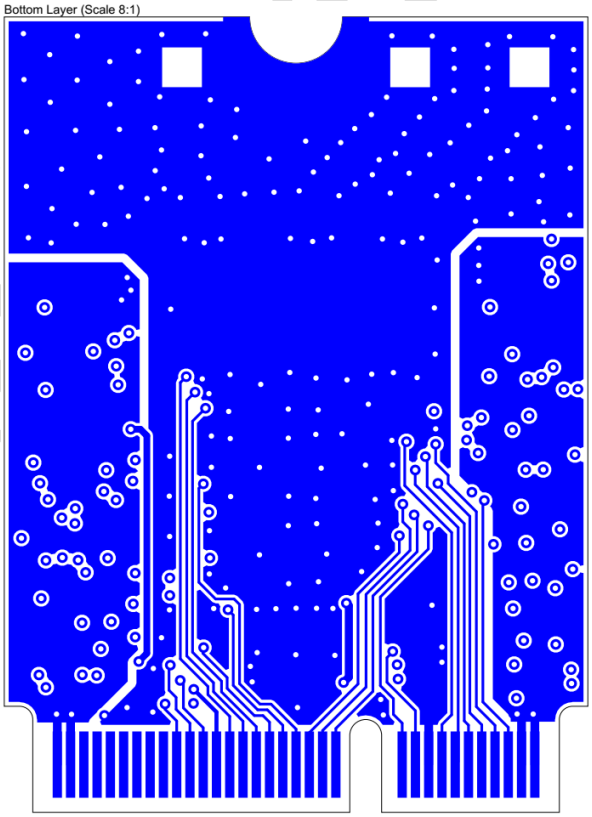

Figure 17. The bottom layer GERBER

PRELIMINARY

© Copyright 2023 Laird Connectivity, Inc.
All Rights Reserved
Americas: +1-800-492-2320
Europe: +44-1628-858-940
Hong Kong: +852 2923 0610