Datasheet

Vela IF820

Version 0.1

Revision History

Version	Date	Notes	Contributors	Approver
0.1	July 2023	Preliminary version	Louis Chang	

© Copyright 2022 Laird Connectivity
All Rights Reserved
https://www.lairdconnect.com/
Americas: +1-800-492-2320
Europe: +44-1628-858-940
Hong Kong: +852 2762 4823

CONTENTS

1 Scope 5
2 General description 5
3 Features Summary 6
4 Specifications 7
5 Block Diagram 9
6 Electrical Characteristics 11
6.1 Absolute Maximum Ratings 11
6.2 Recommended Operating Conditions 11
6.3 General DC Electrical Characteristics 11
7 RF Characteristics 13
7.1 Bluetooth Radio Characteristics 13
8 Host Interface Specifications 15
8.1 High-Speed UART Specifications 15
8.2 SPI timing 15
8.3 I^2C timing 16
8.4 I^2S timing 18
9 MHF4 connector variant Module Footprint and Pin Definitions 20
9.1 MHF4 connector variant Mechanical Definition 20
9.2 MHF4 connector variant Module Footprint 21
9.3 MHF4 connector variant Module Pin Definition 22
9.4 Reference schematic design 28
10 Integrated antenna variant Module Footprint and Pin Definitions 29
10.1 Integrated Antenna variant Mechanical Definition 29
10.2 Integrated Antenna variant Module Footprint 30
10.3 Integrated Antenna variant Module Pin Definition 31
10.4 Reference schematic design 37
11 RF Layout Design Guidelines 38
11.1 General consideration 38
11.2 Layout recommendations for integrated antenna variant 39
12 Application Note for Surface Mount Modules 40
12.1 Introduction 40
12.2 Base SiP Shipping 40
12.3 M.2 Module Shipping 42
12.4 Labelling 43
12.5 Required Storage Conditions 43
12.5.1 Prior to Opening the Dry Packing 43
12.5.2 After Opening the Dry Packing 44

© Copyright 2022 Laird Connectivity
All Rights Reserved
Americas: +1-800-492-2320
Europe: +44-1628-858-940
Hong Kong: +852 2762 4823

12.5.3 Temporary Storage Requirements after Opening 44
12.6 Baking Conditions 44
12.7 Surface Mount Conditions 45
12.7.1 Soldering 45
12.7.2 Cautions When Removing the SIP from the Platform for RMA 46
12.7.3 Precautions for Use 46
13 Reliability Test 47
13.1 Climatic And Dynamic 47
13.3 Reliability MTBF Prediction 48
14 Regulatory 48
15 Ordering Information 50
15.1 General Comments 50
16 Bluetooth SIG Qualification 51
16.1 Overview 51
16.2 Qualification Steps When Referencing a Laird Connectivity Controller Subsystem Design 51
17 Chip Antenna Performance 53
17.1 Summary of Antenna Performance 53
17.2 2.4GHz Radiated Performance 53
18 Additional Assistance 57

© Copyright 2022 Laird Connectivity
All Rights Reserved
Americas: +1-800-492-2320
Europe: +44-1628-858-940
Hong Kong: +852 2762 4823

1 SCOPE

This document describes key hardware aspects of the Laird Connectivity Vela IF820 series wireless modules providing high-speed 4-wire UART interface for Bluetooth® connection. This document is intended to assist device manufacturers and related parties with the integration of this radio into their host devices. Data in this document is drawn from several sources and includes information found in the Infineon CYW20820 data sheet issued on September 26, 2022 along with other documents provided by Infineon.

Note: **The information in this document is subject to change.** Please contact Laird Connectivity to obtain the most recent version of this document.

2 GENERAL DESCRIPTION

The Vela IF820 is a high-performance Bluetooth 5.2 dual mode module based on latest-generation silicon (Infineon's AIROC™ CYW20820). With an industrial temperature rating, broad country certifications, the Vela IF820 provides two different variants to meet various end user application needs.

The integrated chip antenna package style for Vela IF820 eliminates complexity for design integration, user can assemble this package type to the product for acquiring BT/BLE function directly.

The MHF4 type variant, which provides more flexibility for user to choose their own external antenna considering the performance or appearance of product.

In addition, packaged USB Adapter to add Classic Bluetooth and Bluetooth LE connectivity to a variety of additional products in the Bluetooth portfolio

The latest Linux and Android drivers are supported directly by Laird Connectivity and Infineon. Please contact Laird Connectivity Sales/FAE for further information. Ordering information is listed in Table 1.

Table 1: Product ordering information

Part	Description
453-00171R	Vela IF820 - Dual Mode Bluetooth Module, Integrated Antenna (Infineon CYW20820) - Tape / Reel
453-00171C	Vela IF820 - Dual Mode Bluetooth Module, Integrated Antenna (Infineon CYW20820) – Cut / Tape
453-00172R	Vela IF820 - Dual Mode Bluetooth Module, MHF4 Connector (Infineon CYW20820) - Tape / Reel
453-00172C	Vela IF820 - Dual Mode Bluetooth Module, MHF4 Connector (Infineon CYW20820) – Cut / Tape
453-00171-K1	Vela IF820 - Development Kit with integrated chip antenna
453-00172-K1	Vela IF820 - Development Kit with MHF4 Connector
450-00185	Vela IF820 - Dual Mode Bluetooth USB Adapter with integrated antenna (Infineon CYW20820)

© Copyright 2022 Laird Connectivity
All Rights Reserved
Americas: +1-800-492-2320
Europe: +44-1628-858-940
Hong Kong: +852 2762 4823

3 Features Summary

The Laird Connectivity Vela IF820 series device features are described in Table 2.

Table 2: Vela IF820 series wireless module features

Feature	Description
Variants	• Integrated antenna variant • MHF4 connector variant
Bluetooth subsystem	• Complies with Bluetooth® core specification version 5.2 • Includes support for basic data rate (BR), EDR 2 Mbps and 3 Mbps, extended synchronous connection-oriented • (eSCO), Bluetooth® LE, and LE 2 Mbps. • Up to 10dBm EIRP output power • Excellent receiver sensitivity (-94dBm for Bluetooth® LE 1 Mbps)
Microcontroller	• Powerful Arm® Cortex®-M4 core with a maximum speed of 96 MHz • Bluetooth® stack in ROM allowing standalone operation without any external MCU • 256-KB on-chip flash • 176-KB on-chip RAM Bluetooth® stack, peripheral drivers, security functions built into ROM (1 MB) allowing application to efficiently use on-chip flash • AES-128 and true random number generator (TRNG) • Security functions in ROM including elliptic curve digital signature algorithm (ECDSA) signature verification • Over-the-air (OTA) firmware updates
Peripherals	• Up to 22 GPIOs • I2C, I2S, UART, and PCM interfaces • Two Quad-SPI interfaces • Auxiliary ADC with up to 28 analog channels • Programmable key scan 20 ´ 8 matrix • Three-axis quadrature signal decoder • General-purpose timers and pulse width modulation (PWM) • Real-time clock (RTC) and watchdog timer (WDT)
Power management	• On-chip power-on reset (POR) • Integrated buck (DC-DC) and low drop out (LDO) regulators • On-chip software controlled power management unit • On-chip 32 kHz low power oscillator (LPO) with optional external 32 kHz crystal oscillator support

© Copyright 2022 Laird Connectivity
All Rights Reserved
Americas: +1-800-492-2320
Europe: +44-1628-858-940
Hong Kong: +852 2762 4823

4 SPECIFICATIONS

Table 3: Vela IF820 Specifications

Feature	Description
Physical Interface	54-pin LGA package for integrated antenna variant 44-pin LGA package for MHF4 connector variant
Bluetooth/BLE Interface	Host Controller Interface (HCI) using high speed UART
Main Chip	Infineon CYW20820
Input Voltage Requirements	3V Typ, 2.6V Min, 3.3V Max
I/O Signalling Voltage	Set to 3V or 1.8V, by the power domains connected to VDDIO
Operating Temperature	-40° to +85°C (-40° to +185°F)
Operating Humidity	Less than 85% RH (non-condensing)
Storage Temperature	-40° to +85°C (-40° to +185°F)
Storage Humidity	Less than 60% RH (non-condensing)
MSL (Moisture Sensitivity Level)	4
Maximum Electrostatic Discharge	4kV Indirect application (follow EN 301489)
Size – mm	Integrated Antenna variant : 9.3 x 12.5 x 2.15 mm MHF4 Connector variant: 7.5 x 7.5 x 2.15 mm USB Adapter: 18.39 x 50.74 x 11mm
Weight – g (oz.)	~0.x (~0.0x)
Bluetooth Media	Frequency Hopping Spread Spectrum (FHSS)
Bluetooth Standards	Bluetooth 5.2 Core Spec
Bluetooth Data Rates Supported	1, 2, 3 Mbps
Bluetooth Modulation	GFSK@ 1 Mbps Pi/4-DQPSK@ 2 Mbps (EDR) 8-DPSK@ 3 Mbps (EDR) BLE 1 Mbps, 2Mbps
Regulatory Certifications	TBD
Operating Systems Supported	Linux Android

© Copyright 2022 Laird Connectivity
All Rights Reserved
Americas: +1-800-492-2320
Europe: +44-1628-858-940
Hong Kong: +852 2762 4823

Compliance	TBD
Certifications (Pending)	***Bluetooth*® SIG Qualification**
Warranty	One Year Warranty
All specifications are subject to change without notice	

© Copyright 2022 Laird Connectivity
All Rights Reserved
https://www.lairdconnect.com/
Americas: +1-800-492-2320
Europe: +44-1628-858-940
Hong Kong: +852 2762 4823

5 Block Diagram

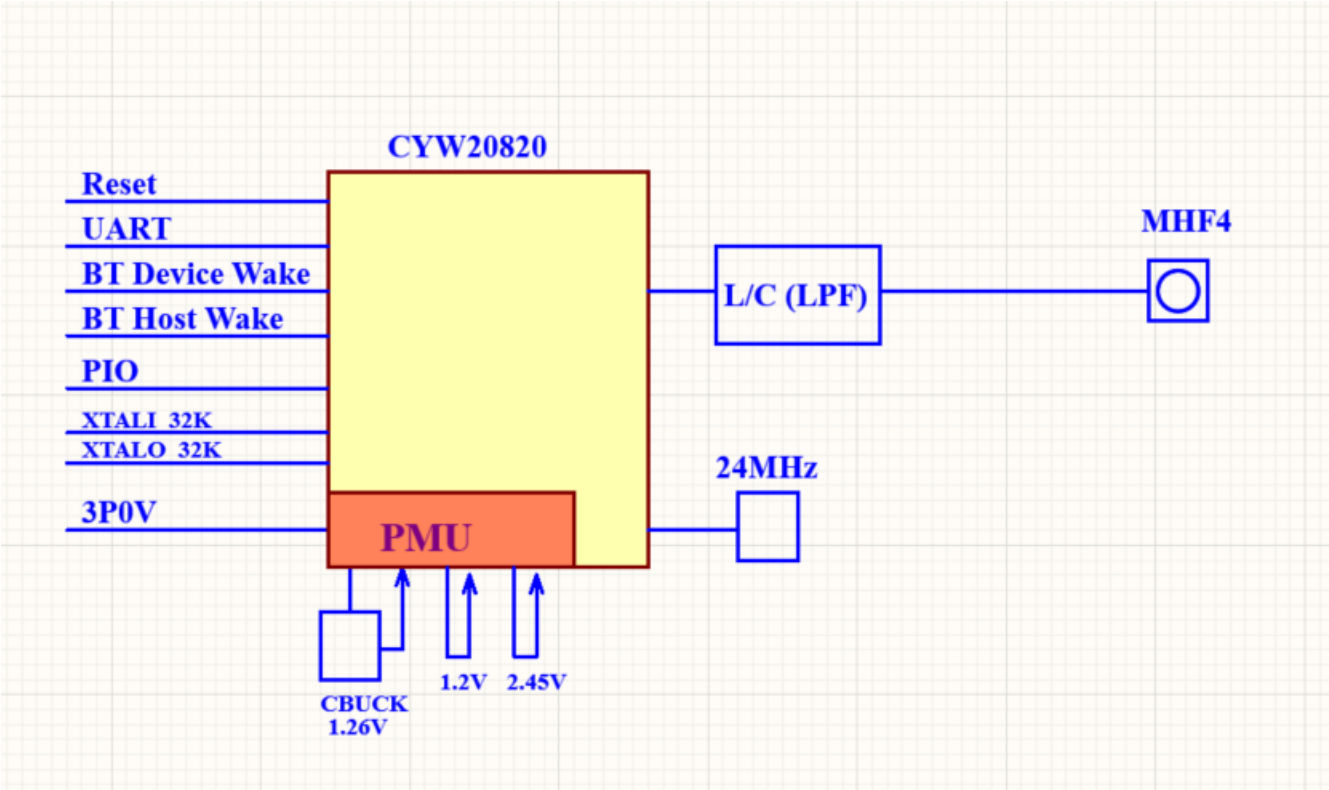

Figure 1: MHF4 connector variant diagram

© Copyright 2022 Laird Connectivity
All Rights Reserved
Americas: +1-800-492-2320
Europe: +44-1628-858-940
Hong Kong: +852 2762 4823

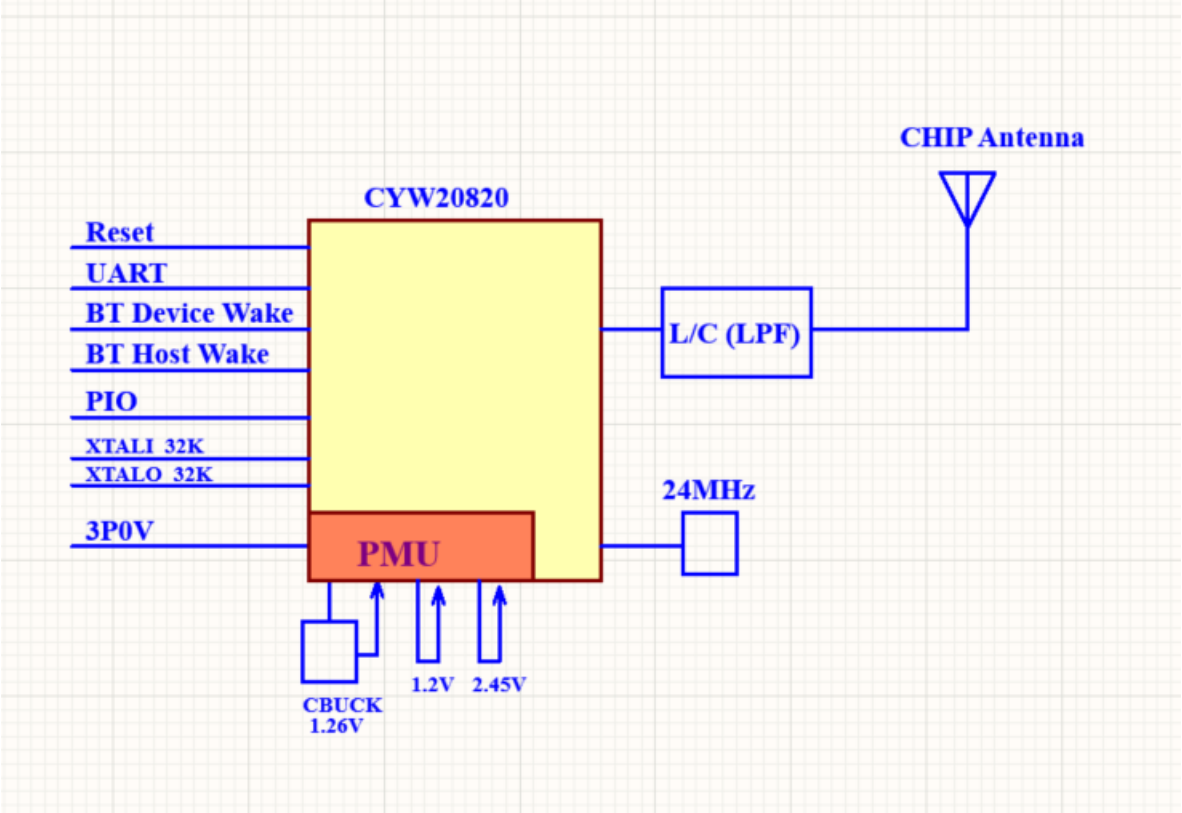

Figure 2: Integrated antenna variant diagram

© Copyright 2022 Laird Connectivity
All Rights Reserved
Americas: +1-800-492-2320
Europe: +44-1628-858-940
Hong Kong: +852 2762 4823

6 Electrical Characteristics

6.1 Absolute Maximum Ratings

Table summarizes the absolute maximum ratings and Table lists the recommended operating conditions for the Vela IF820 series wireless module. Absolute maximum ratings are those values beyond which damage to the device can occur. Functional operation under these conditions, or at any other condition beyond those indicated in the operational sections of this document, is not recommended.

Note: Maximum rating for signals follows the supply domain of the signals.

Table 4: Absolute maximum ratings

Symbol	Parameter	Minimum	Typical	Maximum	Unit
3P0V	Power supply for Internal Regulators	-0.5		3.45	V
VDDIO	DC supply voltage for digital I/O	-0.5		3.45	V

6.2 Recommended Operating Conditions

Table 5: Recommended operating conditions

Symbol (Domain)	Parameter	Min	Typ	Max	Unit
3P0V	Power supply for Internal Regulators	2.6	3.0	3.3	V
VDDIO	DC supply voltage for digital I/O	1.71	1.8/3.0	3.3	V
T-ambient	Ambient temperature	-40	25	85	°C

6.3 General DC Electrical Characteristics

Table list the general DC electrical characteristics over recommended operating conditions (unless otherwise specified).

Table 6: General DC electrical characteristics (For 1.8V or 3V operation VIO)

Symbol	Parameter	Min	Typ	Max	Unit
V_{IL}	Input low voltage (VDDIO = 3V)	—	—	0.8	V
V_{IH}	Input high voltage (VDDIO = 3V)	2.4	—	—	
V_{IL}	Input low voltage (VDDIO = 1.8V)	—	—	0.4	
V_{IH}	Input high voltage (VDDIO = 1.8V)	1.4	—	—	
V_{OL}	output low voltage	—	—	0.4	
V_{OH}	output high voltage	VDDIO-0.4V	—	—	
I_{IL}	input low current	—	—	1	uA

© Copyright 2022 Laird Connectivity
All Rights Reserved
Americas: +1-800-492-2320
Europe: +44-1628-858-940
Hong Kong: +852 2762 4823

I_{IH}	input high current	—	—	1	
I_{OL}	output low current (VDDIO = 3V, VOL = 0.4V)	—	—	4	mA
I_{OL}	output low current (VDDIO = 3V, VOL = 1.8V)	—	—	2	
I_{OH}	output high current (VDDIO = 3V, VOH = 2.6V)	—	—	8	
I_{OH}	output high current (VDDIO = 1.8V, VOH = 1.4V)	—	—	4	
C_{IN}	Input capacitance	—	—	0.4	pF

© Copyright 2022 Laird Connectivity
All Rights Reserved
Americas: +1-800-492-2320
Europe: +44-1628-858-940
Hong Kong: +852 2762 4823

7 RF CHARACTERISTICS

7.1 Bluetooth Radio Characteristics

Table 4 through Table describe the basic rate transmitter performance, basic rate receiver performance, enhanced rate receiver performance, and current consumption conditions at 25°C.

Table 4: Basic rate transmitter performance temperature at 25°C (3V)

Test Parameter		Min	Typ	Max	BT Spec.	Unit
RF Output Power[4] (test at UHF4 connector)	BR	—	6.5	7.5	0 ~ +20	dBm
	EDR 2M	—	2	2.5		
	EDR 3M	—	0.5	1		
Max EIRP (Integrated antenna variant)				10		dBm
Frequency Range		2.4	—	2.480	2.4 ≤ f ≤ 2.480	GHz

Table 8: Basic rate receiver performance at (3V)

Test Parameter		Min	Typ	Max	Bluetooth Spec.	Unit
Sensitivity (1DH5)	BER ≤ 0.1%	—	-90	-87	≤ -70	dBm
Maximum Input	BER ≤ 0.1%	—	—	-20	≥ -20	dBm

Table 9: Enhanced data rate receiver performance (3V)

Test Parameter		Min	Typ	Max	Bluetooth Spec.	Unit
Sensitivity (BER ≤ 0.01%)	π/4-DQPSK	—	-92.5	-89.5	≤ -70	dBm
	8-DPSK	—	-86	-83	≤ -70	dBm

Table 10: BLE RF Specifications (3V)

Parameter	Conditions	Min	Typ	Max	Unit
Frequency range	—	2402	—	2480	MHz
Rx sensitivity[3]	GFSK, 30.8% PER, 1Mbps	—	-94	-91	dBm
Rx sensitivity[3]	GFSK, 30.8% PER, 2Mbps	—	-90	-87	dBm
RF Output Power[4] (test at UHF4 connector)	—	—	—	7.5	dBm
Max EIRP (Integrated antenna variant				10	dBm

Note[3]: Dirty Tx is Off.

Note[4]: The Bluetooth LE TX power cannot exceed 10 dBm EIRP specification limit. The front-end losses and antenna gain/loss must be factored in so as not to exceed the limit.

© Copyright 2022 Laird Connectivity
All Rights Reserved
Americas: +1-800-492-2320
Europe: +44-1628-858-940
Hong Kong: +852 2762 4823

Table 11: Bluetooth current consumption, VBAT=3V VDDIO=3V, MHF4 connector variant

operating mode	data rate	module 3V	Unit
TX	DH1	13.5	mA
	DH3	13.5	
	DH5	13.5	
	2DH1	20.2	
	2DH3	20	
	2DH5	20.1	
	3DH1	19.8	
	3DH3	20	
	3DH5	20.1	
	LE1M	13.3	
	LE2M	13.3	
RX	DH5	6.2	mA
	LE1M	6.4	
	LE2M	7.4	

Table 12: Bluetooth current consumption, VBAT=3V VDDIO=3V, Integrated antenna variant

operating mode	data rate	module 3V	Unit
TX	DH1	14.4	mA
	DH3	14.5	
	DH5	14.5	
	2DH1	19.9	
	2DH3	20.4	
	2DH5	20.4	
	3DH1	20.2	
	3DH3	20.1	
	3DH5	20.1	
	LE1M	16.4	
	LE2M	16.3	
RX	DH5	6.2	mA
	LE1M	6.4	
	LE2M	7.4	

Note : current consumption is measured at average of the TX-on time

© Copyright 2022 Laird Connectivity
All Rights Reserved
Americas: +1-800-492-2320
Europe: +44-1628-858-940
Hong Kong: +852 2762 4823

8 Host Interface Specifications

8.1 High-Speed UART Specifications

Table 13: UART timing specifications

Reference	Characterstics	Min	Typ	Max	Units
1	Delay time, UART_CTS_N LOW to UART_TXD valid.	—	—	1.5	Bit periods
2	Setup time, UART_CTS_N HIGH before midpoint of stop bit.		—	0.67	
3	Delay time, midpoint of stop bit to UART_RTS_N HIGH.	—	—	1.33	

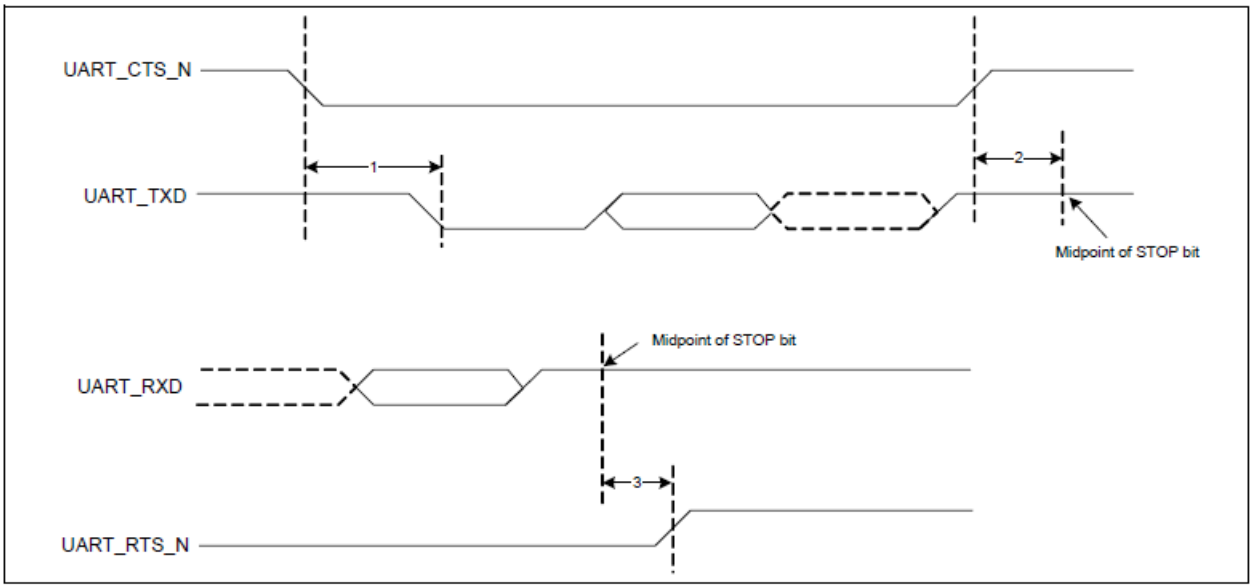

Figure 3: UART timing diagram

8.2 SPI timing

Table 14: SPI mode 0 and 2

Reference	Characterstics	Min	Max	Units
1	Time from master assert SPI_CSN to first clock edge	45	—	ns
2	Setup time for MOSI data lines	6	1/2 SCK	
3	Idle time between subsequent SPI transactions	1 SCK	—	

© Copyright 2022 Laird Connectivity
All Rights Reserved
Americas: +1-800-492-2320
Europe: +44-1628-858-940
Hong Kong: +852 2762 4823

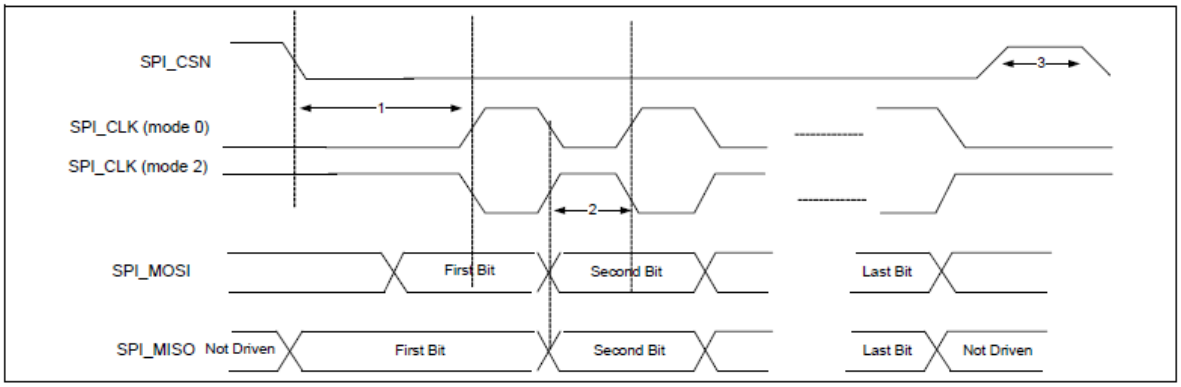

Figure 4: SPI timing, mode 0 and 2

Table 15: SPI mode 1 and 3

Reference	Characterstics	Min	Max	Units
1	Time from master assert SPI_CSN to first clock edge	45	—	ns
2	Setup time for MOSI data lines	6	1/2 SCK	
3	Idle time between subsequent SPI transactions	1 SCK	—	

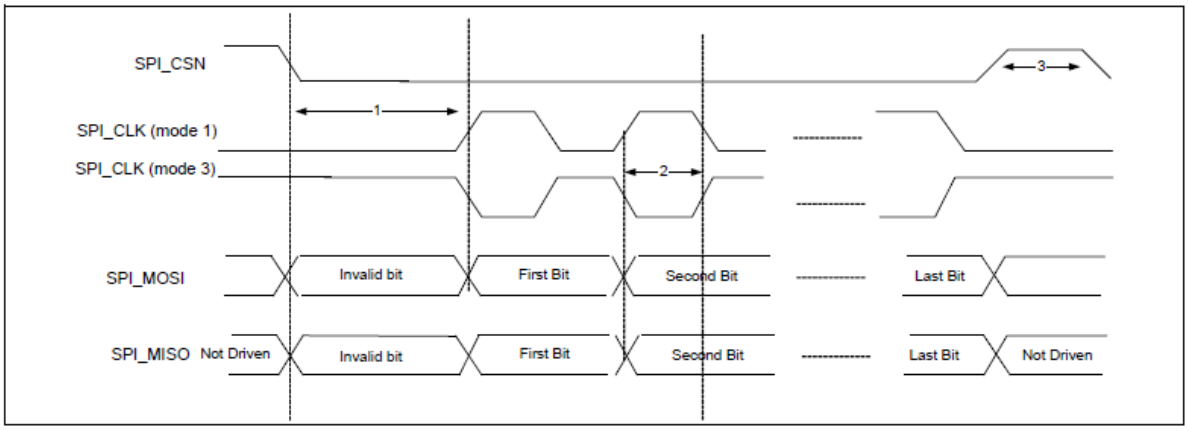

Figure 5: SPI timing, mode 1 and 3

8.3 I²C timing

Table 16: I²C interface timing specifications (up to 1 MHz)

Reference	Characterstics	Min	Max	Units
1	Clock frequency	—	100 400 800 1000	KHz

© Copyright 2022 Laird Connectivity
All Rights Reserved
Americas: +1-800-492-2320
Europe: +44-1628-858-940
Hong Kong: +852 2762 4823

2	START condition setup time	650	—	
3	START condition hold time	280	—	
4	Clock low time	650	—	
5	Clock high time	280		
6	Data input hold time[1]	0	—	us
7	Data input setup time	100	—	
8	STOP condition setup time	280		
9	Output valid from clock	—	400	
10	Bus free time[2]	650	—	

Notes

1.As a transmitter, 125 ns of delay is provided to bridge the undefined region of the falling edge of SCL to avoid unintended generation of START or STOP conditions.

2.Time that the CBUS must be free before a new transaction can start.

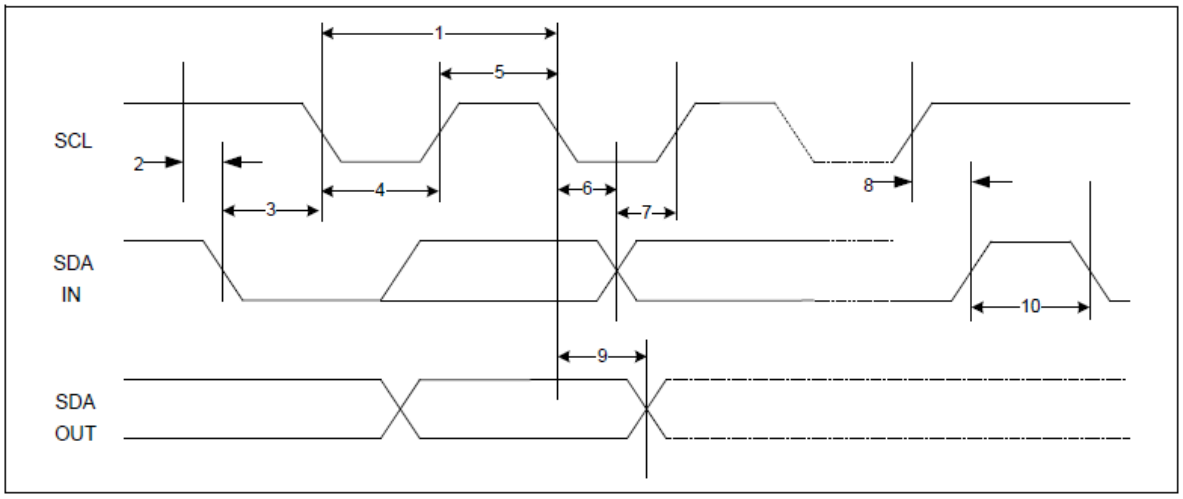

Figure 2: I²C interface timing diagram

© Copyright 2022 Laird Connectivity
All Rights Reserved
Americas: +1-800-492-2320
Europe: +44-1628-858-940
Hong Kong: +852 2762 4823

8.4 I²S timing

Table 17: Timing for I²S transmitters and receivers

	Transmitter				Receiver				Notes
	Lower limit		Upper limit		Lower limit		Upper limit		
	Min	Max	Min	Max	Min	Max	Min	Max	
Clock Period T	T_{tr}	-	-	-	T_r	-	-	-	[3]
Master mode: Clock generated by transmitter or receiver									
HIGH t_{HC}	0.35 x T_{tr}	-	-	-	0.35 x T_{tr}	-	-	-	[4]
LOW t_{LC}	0.35 x T_{tr}	-	-	-	0.35 x T_{tr}	-	-	-	[4]
Slave mode: Clock accepted by transmitter or receiver									
HIGH t_{HC}	-	0.35 x T_{tr}	-	-	-	0.35 x T_{tr}	-	-	[3]
LOW t_{LC}	-	0.35 x T_{tr}	-	-	-	0.35 x T_{tr}	-	-	[3]
Rise time t_{RC}	-	-	0.15 x T_{tr}	-	-	-	-	-	[4]
Transmitter									
Delay t_{dtr}	-	-	-	0.8 x T	-	-	-	-	[5]
Hold time t_{htr}	0	-	-	-	-	-	-	-	[4]
Receiver									
Setup time t_{sr}	-	-	-	-	0.2 x T_{tr}	-	-	-	[6]
Hold time t_{hr}	-	-	-	-	0.2 x T_{tr}	-	-	-	[6]

Notes

3.The system clock period T must be greater than T_{tr} and T_r because both the transmitter and receiver have to be able to handle the data transfer rate.

4.At all data rates in master mode, the transmitter or receiver generates a clock signal with a fixed mark/space ratio. For this reason, t_{HC} and t_{LC} are specified with respect to T.

5.In slave mode, the transmitter and receiver need a clock signal with minimum HIGH and LOW periods so that they can detect the signal. So long as the minimum periods are greater than 0.35T_r, any clock that meets the requirements can be used.

6.Because the delay (t_{dtr}) and the maximum transmitter speed (defined by T_{tr}) are related, a fast transmitter driven by a slow clock edge can result in tdtr not exceeding t_{RC} which means t_{htr} becomes zero or negative. Therefore, the transmitter has to guarantee that t_{htr} is greater than or equal to zero, so long as the clock rise-time t_{RC} is not more than t_{RCmax}, where t_{RCmax} is not less than 0.15T_{tr}.

7.To allow data to be clocked out on a falling edge, the delay is specified with respect to the rising edge of the clock signal and T, always giving the receiver sufficient setup time.

8.The data setup and hold time must not be less than the specified receiver setup and hold time.

© Copyright 2022 Laird Connectivity
All Rights Reserved
Americas: +1-800-492-2320
Europe: +44-1628-858-940
Hong Kong: +852 2762 4823

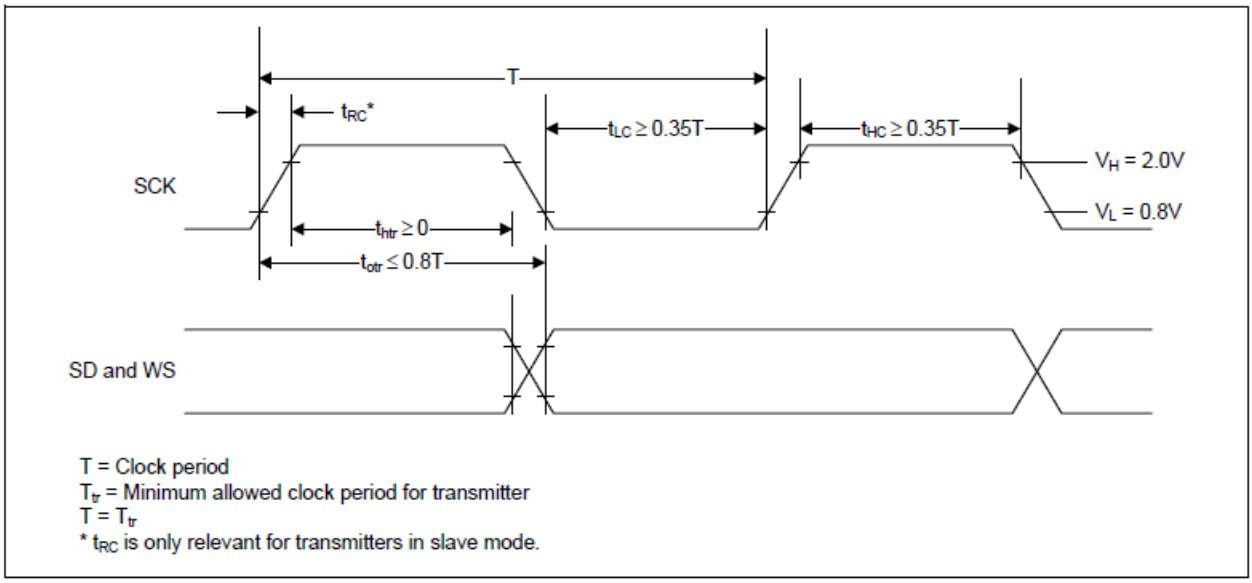

Figure 3: I²S transmitter timing

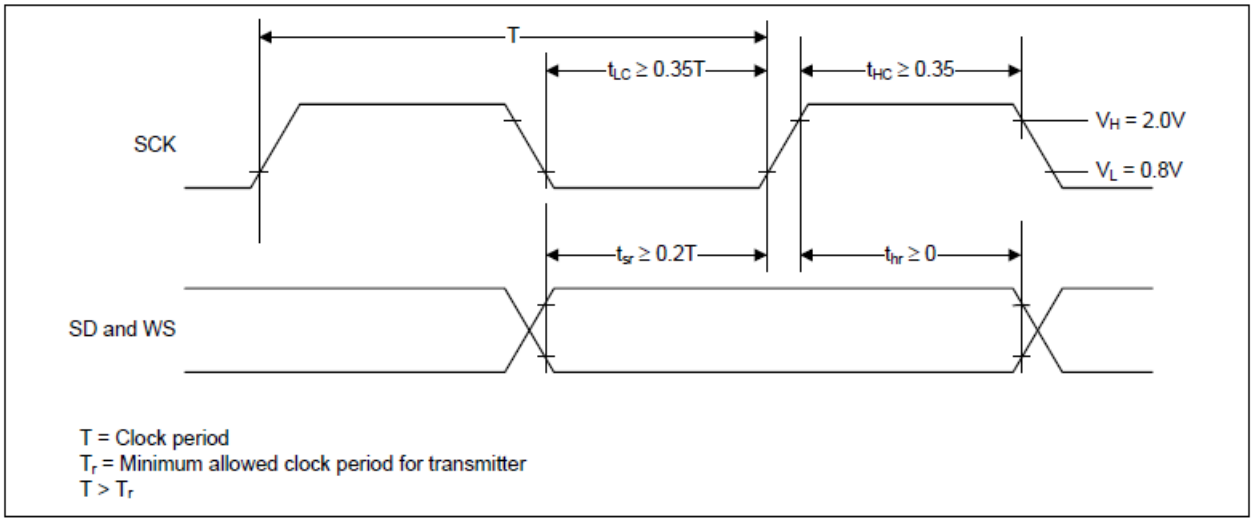

Figure 8: I²S receiver timing

© Copyright 2022 Laird Connectivity
All Rights Reserved
Americas: +1-800-492-2320
Europe: +44-1628-858-940
Hong Kong: +852 2762 4823

9 MHF4 CONNECTOR VARIANT MODULE FOOTPRINT AND PIN DEFINITIONS

Note: The following footprint and pin definitions apply to the Vela IF820. There are two module footprints, depending on which variant of the module is used. *It is important to ensure you are using the correct version on your design*.

Note on regulatory testing:
TBD

9.1 MHF4 connector variant Mechanical Definition

Module dimensions of MHF4 connector variant module is 7.5 x 7.5 x 2.15 mm. Detail drawings are shown in Figure 9.

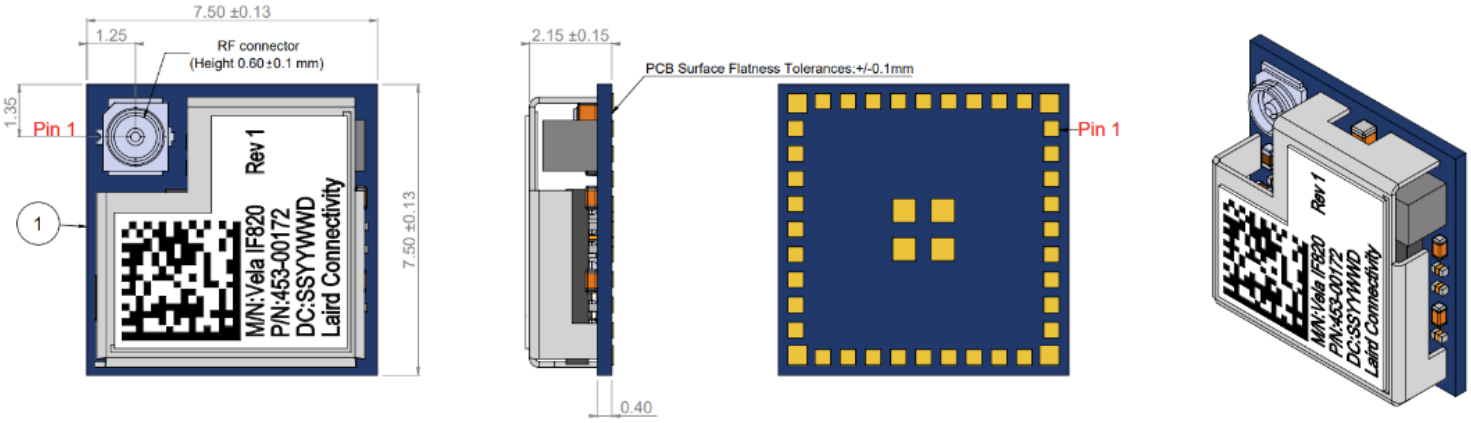

Figure 9: Mechanical Details – MHF4 Variant (453-00172)

© Copyright 2022 Laird Connectivity
All Rights Reserved
Americas: +1-800-492-2320
Europe: +44-1628-858-940
Hong Kong: +852 2762 4823

9.2 MHF4 connector variant Module Footprint

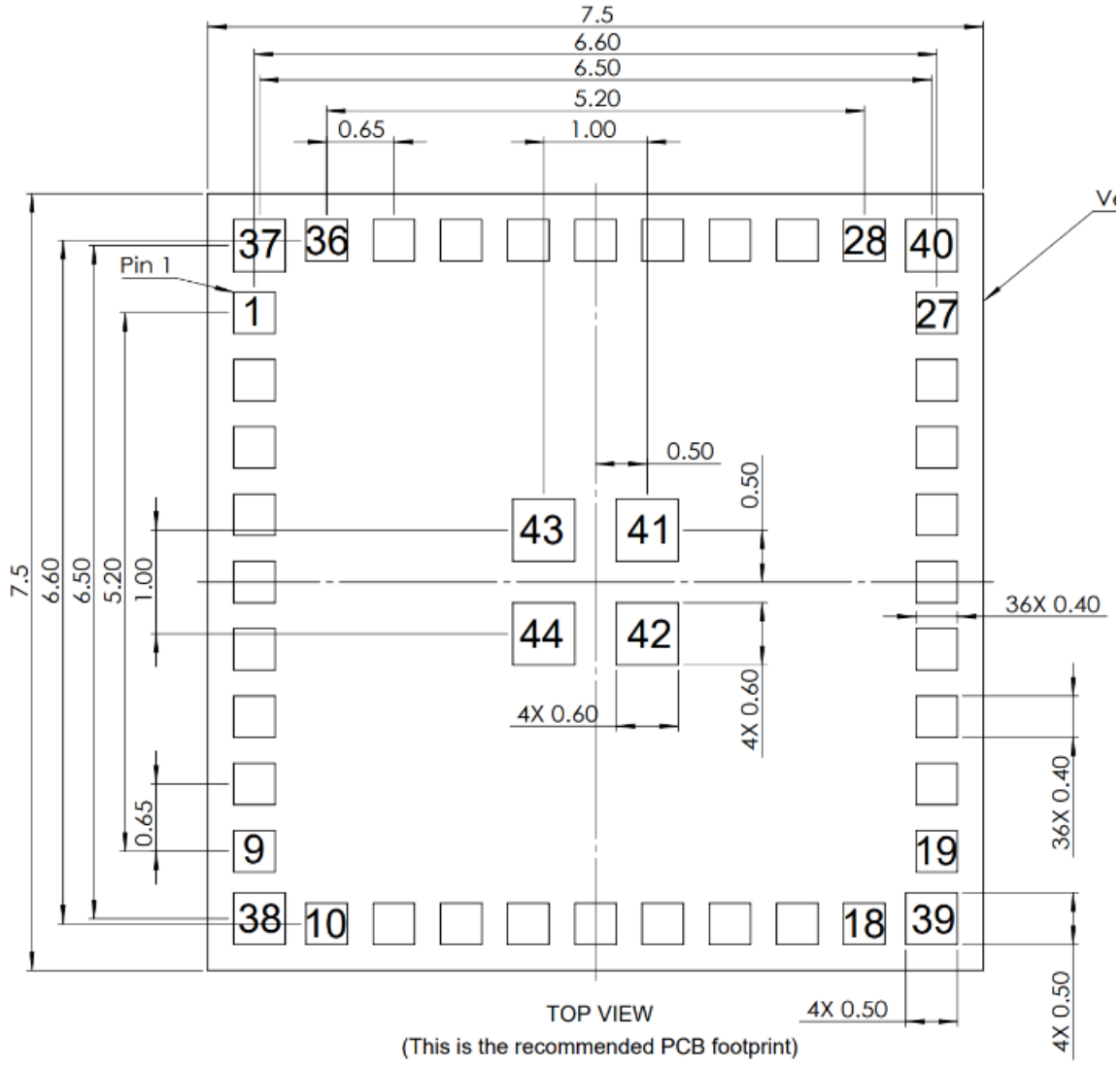

Figure 10: MHF4 connector variant module pinout (top view)

© Copyright 2022 Laird Connectivity
All Rights Reserved
Americas: +1-800-492-2320
Europe: +44-1628-858-940
Hong Kong: +852 2762 4823

9.3 MHF4 connector variant Module Pin Definition

Table 18: Pin definitions of MHF4 connector variant module

Pin #	Name	I/O	Voltage Ref.	Description
1	BT_DEV_WAKE	I	VDDIO	A signal from the CYW20820 device to the host indicating that the Bluetooth® device requires attention.
2	BT_HOST_WAKE	O	VDDIO	A signal from the host to the CYW20820 indicating that the host requires attention.
3	GND	-	-	NA
4	P28	I/O	VDDIO	Recommended functions for P28 • PWM2 • SCL3 (master and slave) • Optical control output: QOC2 • A/D converter input 11 • Current: 16 mA sink P28 can also be remapped using Supermux I/O functions as defined in Table 6 and Table 7.
5	P4	I/O	VDDIO	Recommended functions for P4 • Keyboard scan input (row): KSI4 • Quadrature: QDY0 • SPI_1: MOSI (master only) P4 can also be remapped using Supermux I/O functions as defined in Table 6 and Table 7.
6	P2	I/O	VDDIO	Recommended functions for P2 • Keyboard scan input (row): KSI2 • Quadrature: QDX0 • SPI_1: MOSI (master only) • UART1_RTS_N P2 can also be remapped using Supermux I/O functions as defined in Table 6 and Table 7.

© Copyright 2022 Laird Connectivity
All Rights Reserved
Americas: +1-800-492-2320
Europe: +44-1628-858-940
Hong Kong: +852 2762 4823

7	P15	I/O	VDDIO	Recommended functions for P15 • Keyboard scan output (column): KSO7 • A/D converter input 20 P15 can also be remapped using Supermux I/O functions as defined in Table 6 and Table 7.
8	P5	I/O	VDDIO	Recommended functions for P5 • Keyboard scan input (row): KSI5 • Quadrature: QDY1 • Peripheral UART: puart_tx • SPI_1: MISO (slave only) • I2C: SDA P5 can also be remapped using Supermux I/O functions as defined in Table 6 and Table 7.
9	P8	I/O	VDDIO	Recommended functions for P8 • Keyboard scan output (column): KSO0 • A/D converter input 27 • External T/R switch control: ~tx_pd P8 can also be remapped using Supermux I/O functions as defined in Table 6 and Table 7.
10	VDDIO	I	VDDIO	1.71V to 3.3V is recommended to supply for digital I/O
11	GND	-	-	NA
12	XTALI_32K	I	VDDIO	Low-power oscillator input
13	XTALO_32K	O	VDDIO	Low-power oscillator output
14	P3	I/O	VDDIO	Recommended functions for P3 • Keyboard scan input (row): KSI3 • Quadrature: QDX1 • UART1_CTS_N • SPI_1: SPI_CLK (master only) P3 can also be remapped using Supermux I/O functions as defined in Table 6 and Table 7.

© Copyright 2022 Laird Connectivity
All Rights Reserved
Americas: +1-800-492-2320
Europe: +44-1628-858-940
Hong Kong: +852 2762 4823

15	P6	I/O	VDDIO	Recommended functions for P6 • Keyboard scan input (row): KSI6 • Quadrature: QDZ0 • Peripheral UART: puart_rts • PWM2 P6 can also be remapped using Supermux I/O functions as defined in Table 6 and Table 7.
16	P17	I/O	VDDIO	Recommended functions for P17 • Keyboard scan output (column): KSO9 • A/D converter input 18 P17 can also be remapped using Supermux I/O functions as defined in Table 6 and Table 7.
17	P9	I/O	VDDIO	Recommended functions for P9 • Keyboard scan output (column): KSO1 • A/D converter input 26 • External T/R switc0h control: tx_pd P9 can also be remapped using Supermux I/O functions as defined in Table 6 and Table 7.
18	P12	I/O	VDDIO	Recommended functions for P12 • Keyboard scan output (column): KSO4 • A/D converter input 23 P12 can also be remapped using Supermux I/O functions as defined in Table 6 and Table 7.
19	P13	I/O	VDDIO	Recommended functions for P13 • Keyboard scan output (column): KSO5 • A/D converter input 22 • PWM3 P13 can also be remapped using Supermux I/O functions as defined in Table 6 and Table 7.

© Copyright 2022 Laird Connectivity
All Rights Reserved
Americas: +1-800-492-2320
Europe: +44-1628-858-940
Hong Kong: +852 2762 4823

20	P1	I/O	VDDIO	Recommended functions for P1 • Keyboard scan input (row): KSI1 • A/D converter input 28 • Peripheral UART: puart_rts • SPI_1: MISO (slave only) • UART1_RXD • Can also be remapped using Supermux I/O functions as defined in Table 6 and Table 7.
21	P11	I/O	VDDIO	Recommended functions for P11 • Keyboard scan output (column): KSO3 • A/D converter input 24 P11 can also be remapped using Supermux I/O functions as defined in Table 6 and Table 7.
22	P10	I/O	VDDIO	Recommended functions for P10 • Keyboard scan output (column): KSO2 • A/D converter input 25 • External PA ramp control: PA_Ramp P10 can also be remapped using Supermux I/O functions as defined in Table 6 and Table 7.
23	P27	I/O	VDDIO	Recommended functions for P27 • Keyboard scan output (column): KSO19 • PWM1 • SPI_1: MOSI (master only) • Optical control output: QOC1 • Current: 16 mA sink P27 can also be remapped using Supermux I/O functions as defined in Table 6 and Table 7.
24	RST	I	VDDIO	Active-low system reset with internal pull-up resistor.
25	P0	I/O	VDDIO	Recommended functions for P0 • Keyboard scan input (row): KSI0 • A/D converter input 29 • Peripheral UART: puart_tx • SPI_1: MOSI (master only) • UART1_TXD P0 can also be remapped using Supermux I/O functions as defined in Table 6 and Table 7.

© Copyright 2022 Laird Connectivity
All Rights Reserved
Americas: +1-800-492-2320
Europe: +44-1628-858-940
Hong Kong: +852 2762 4823

26	P37	I/O	VDDIO	Recommended functions for P37 • A/D converter input 2 • Quadrature: QDZ1 • SPI_1: MISO (slave only) • Auxiliary clock output: ACLK1 • I2C: SCL P37 can also be remapped using Supermux I/O functions as defined in Table 6 and Table 7.
27	P32	I/O	VDDIO	Recommended functions P32 • A/D converter input 7 • Quadrature: QDX0 • Auxiliary clock output: ACLK0 • Peripheral UART: puart_tx P32 Can also be remapped using Supermux I/O functions as defined in Table 6 and Table 7.
28	P14	I/O	VDDIO	Recommended functions for P14 • Keyboard scan output (column): KSO6 • A/D converter input 21 • PWM2 P14 can also be remapped using Supermux I/O functions as defined in Table 6 and Table 7.
29	P29	I/O	VDDIO	Recommended functions for P29 • PWM3 • SDA3 (master and slave) • Optical control output: QOC3 • A/D converter input 10 • Current: 16 mA sink P29 can also be remapped using Supermux I/O functions as defined in Table 6 and Table 7.
30	P26	I/O	VDDIO	Recommended functions for P26 • Keyboard scan output (column): KSO18 • PWM0 • SPI_1: SPI_CS (slave only) • Optical control output: QOC0 • Current: 16 mA sink P26 can also be remapped using Supermux I/O functions as defined in Table 6 and Table 7.

© Copyright 2022 Laird Connectivity
All Rights Reserved
Americas: +1-800-492-2320
Europe: +44-1628-858-940
Hong Kong: +852 2762 4823

31	3P0V	I	3V	Power supply input
32	GND	-	-	Ground
33	BT_UART_RTS	O, PU	VDDIO	Request to send (RTS) for HCI UART interface. Leave unconnected if not used.
34	BT_UART_TXD	O, PU	VDDIO	UART serial output. Serial data output for the HCI UART interface.
35	BT_UART_RXD	I	VDDIO	UART serial input. Serial data input for the HCI UART interface.
36	BT_UART_CTS	I, PU	VDDIO	Clear to send (CTS) for HCI UART interface. Leave unconnected if not used.
37	GND	-	-	Ground
38	GND	-	-	Ground
39	GND	-	-	Ground
40	GND	-	-	Ground
41	GND	-	-	Ground
42	GND	-	-	Ground
43	GND	-	-	Ground
44	GND	-	-	Ground

© Copyright 2022 Laird Connectivity
All Rights Reserved
Americas: +1-800-492-2320
Europe: +44-1628-858-940
Hong Kong: +852 2762 4823

9.4 Reference schematic design

Suggest to put bypass capacitor 100nF in the 3P0V (pin31) and VDDIO (pin10).

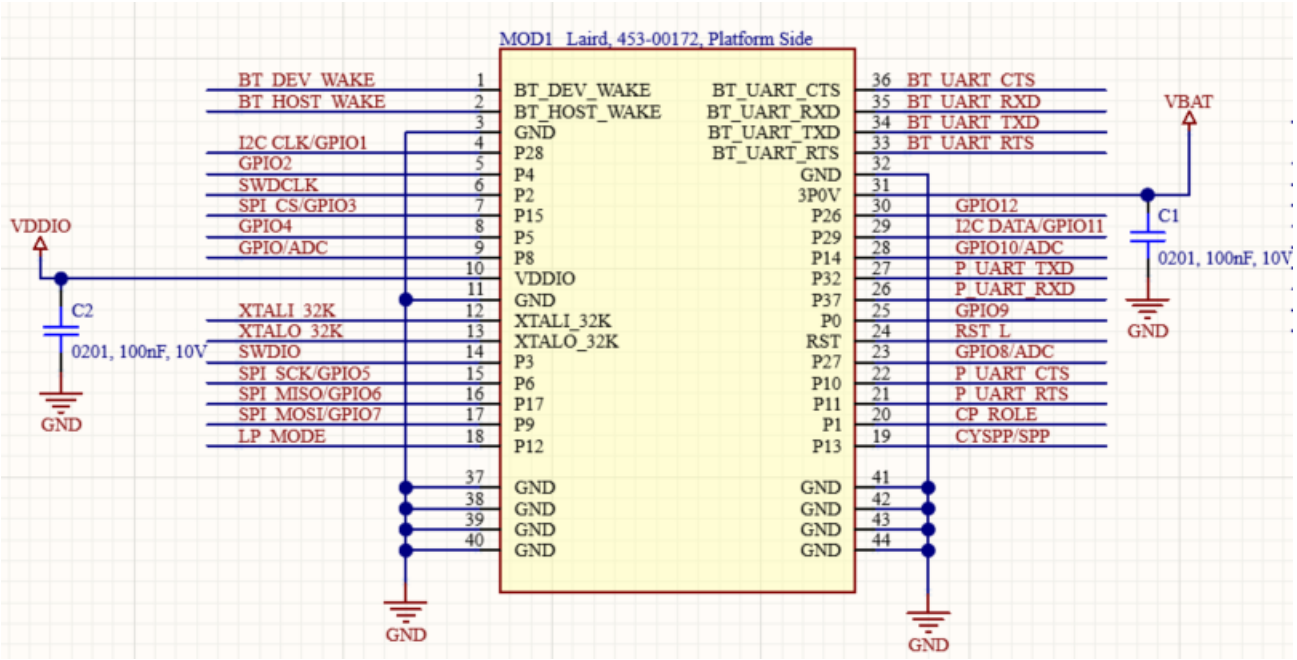

Figure 4: MHF4 connector variant schematic

© Copyright 2022 Laird Connectivity
All Rights Reserved
Americas: +1-800-492-2320
Europe: +44-1628-858-940
Hong Kong: +852 2762 4823

10 Integrated antenna variant Module Footprint and Pin Definitions

10.1 Integrated Antenna variant Mechanical Definition

Module dimensions of integrated antenna variant module is 12.5 x 9.3 x 2.15 mm. Detail drawings are shown in Figure 12.

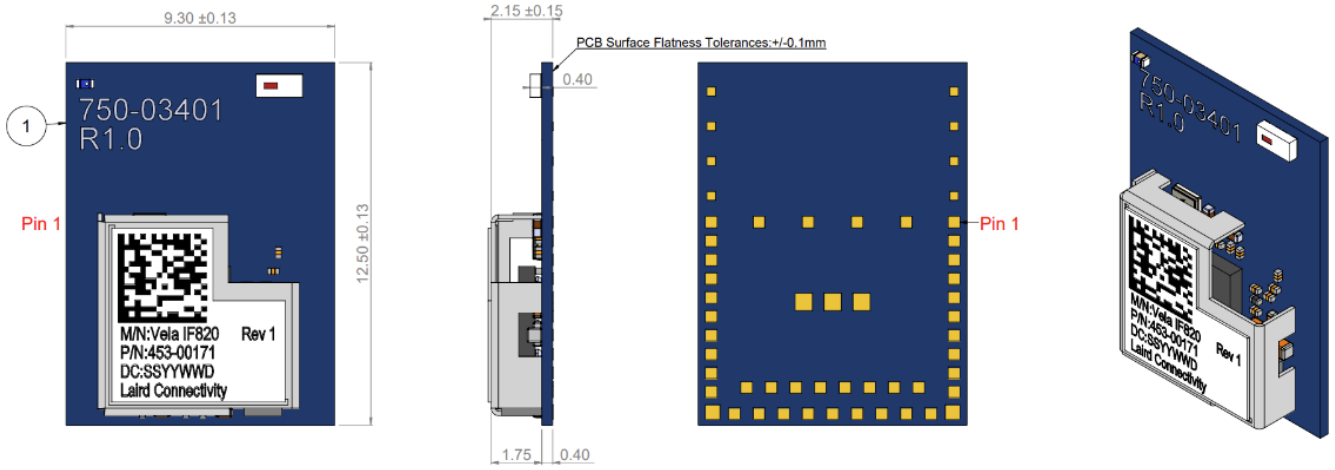

Figure 5: Mechanical Details – Integrated Antenna Variant (453-00171)

Note on regulatory testing:
none

© Copyright 2022 Laird Connectivity
All Rights Reserved
Americas: +1-800-492-2320
Europe: +44-1628-858-940
Hong Kong: +852 2762 4823

10.2 Integrated Antenna variant Module Footprint

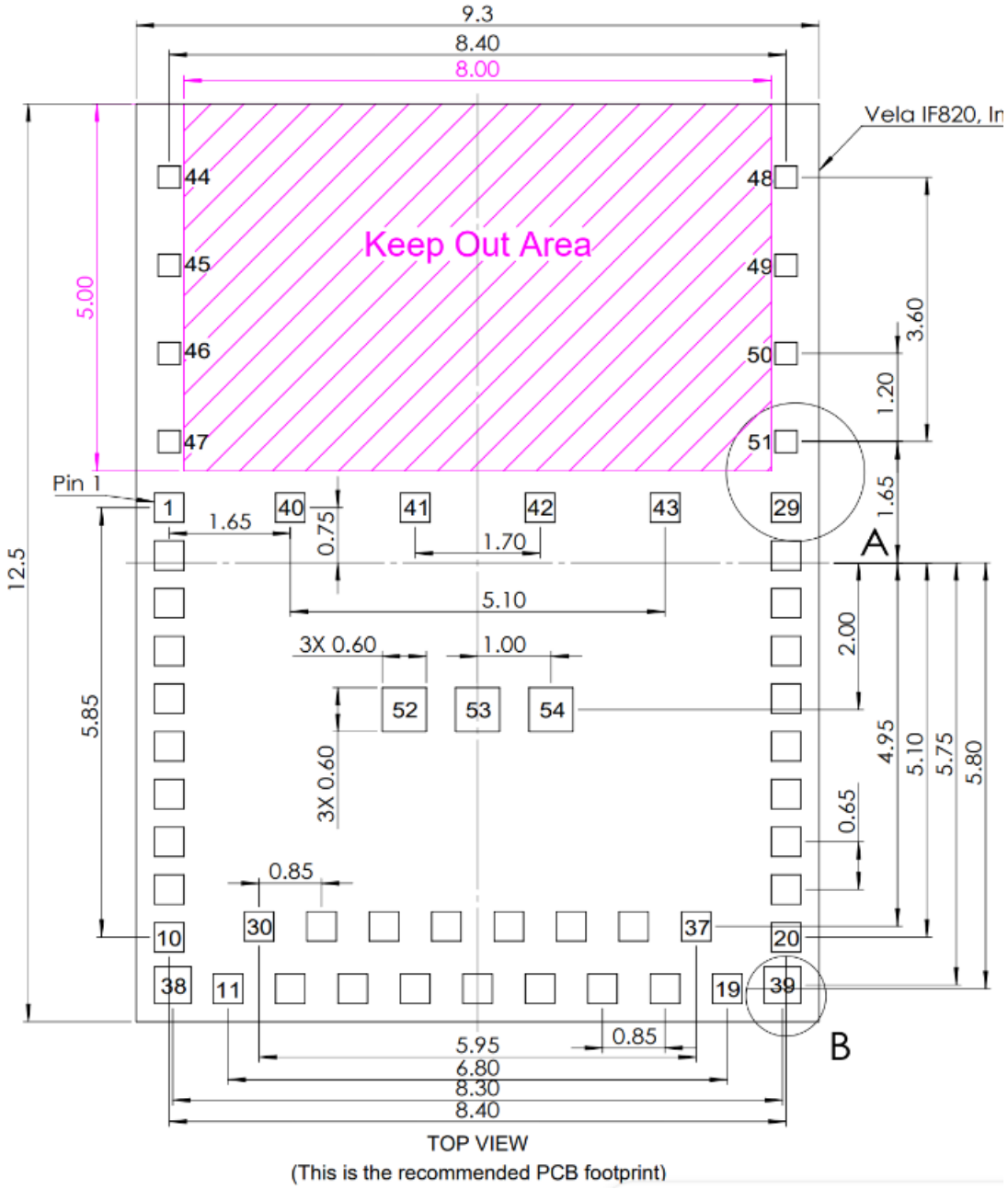

Figure 13: Integrated antenna variant module pinout (top view)

© Copyright 2022 Laird Connectivity
All Rights Reserved
Americas: +1-800-492-2320
Europe: +44-1628-858-940
Hong Kong: +852 2762 4823

10.3 Integrated Antenna variant Module Pin Definition

Table 19: Pin definitions of Vela IF820 chip Antenna module

Pin #	Name	I/O	Voltage Ref.	Description
1	GND	-	-	Ground
2	VDDIO	I	VDDIO	1.71V to 3.3V is recommended to supply for digital I/O
3	GND	-	-	Ground
4	XTALI_32K	I	VDDIO	Low-power oscillator input
5	XTALO_32K	O	VDDIO	Low-power oscillator output
6	P15	I/O	VDDIO	Recommended functions for P15 • Keyboard scan output (column): KSO7 • A/D converter input 20 P15 can also be remapped using Supermux I/O functions as defined in Table 6 and Table 7.
7	P8	I/O	VDDIO	Recommended functions for P8 • Keyboard scan output (column): KSO0 • A/D converter input 27 • External T/R switch control: ~tx_pd P8 can also be remapped using Supermux I/O functions as defined in Table 6 and Table 7.
8	P2	I/O	VDDIO	Recommended functions for P2 • Keyboard scan input (row): KSI2 • Quadrature: QDX0 • SPI_1: MOSI (master only) • UART1_RTS_N P2 can also be remapped using Supermux I/O functions as defined in Table 6 and Table 7.
9	P3	I/O	VDDIO	Recommended functions for P3 • Keyboard scan input (row): KSI3 • Quadrature: QDX1 • UART1_CTS_N • SPI_1: SPI_CLK (master only) P3 can also be remapped using Supermux I/O functions as defined in Table 6 and Table 7.

© Copyright 2022 Laird Connectivity
All Rights Reserved
Americas: +1-800-492-2320
Europe: +44-1628-858-940
Hong Kong: +852 2762 4823

10	P6	I/O	VDDIO	Recommended functions for P6 • Keyboard scan input (row): KSI6 • Quadrature: QDZ0 • Peripheral UART: puart_rts • PWM2 P6 can also be remapped using Supermux I/O functions as defined in Table 6 and Table 7.
11	P17	I/O	VDDIO	Recommended functions for P17 • Keyboard scan output (column): KSO9 • A/D converter input 18 P17 can also be remapped using Supermux I/O functions as defined in Table 6 and Table 7.
12	P13	I/O	VDDIO	Recommended functions for P13 • Keyboard scan output (column): KSO5 • A/D converter input 22 • PWM3 P13 can also be remapped using Supermux I/O functions as defined in Table 6 and Table 7.
13	P9	I/O	VDDIO	Recommended functions for P9 • Keyboard scan output (column): KSO1 • A/D converter input 26 • External T/R switc0h control: tx_pd P9 can also be remapped using Supermux I/O functions as defined in Table 6 and Table 7.
14	P10	I/O	VDDIO	Recommended functions for P10 • Keyboard scan output (column): KSO2 • A/D converter input 25 • External PA ramp control: PA_Ramp P10 can also be remapped using Supermux I/O functions as defined in Table 6 and Table 7.

© Copyright 2022 Laird Connectivity
All Rights Reserved
Americas: +1-800-492-2320
Europe: +44-1628-858-940
Hong Kong: +852 2762 4823

15	P37	I/O	VDDIO	Recommended functions for P37 • A/D converter input 2 • Quadrature: QDZ1 • SPI_1: MISO (slave only) • Auxiliary clock output: ACLK1 • I2C: SCL P37 can also be remapped using Supermux I/O functions as defined in Table 6 and Table 7.
16	P11	I/O	VDDIO	Recommended functions for P11 • Keyboard scan output (column): KSO3 • A/D converter input 24 P11 can also be remapped using Supermux I/O functions as defined in Table 6 and Table 7.
17	P32	I/O	VDDIO	Recommended functions P32 • A/D converter input 7 • Quadrature: QDX0 • Auxiliary clock output: ACLK0 • Peripheral UART: puart_tx P32 Can also be remapped using Supermux I/O functions as defined in Table 6 and Table 7.
18	P14	I/O	VDDIO	Recommended functions for P14 • Keyboard scan output (column): KSO6 • A/D converter input 21 • PWM2 P14 can also be remapped using Supermux I/O functions as defined in Table 6 and Table 7.
19	P5	I/O	VDDIO	Recommended functions for P5 • Keyboard scan input (row): KSI5 • Quadrature: QDY1 • Peripheral UART: puart_tx • SPI_1: MISO (slave only) • I2C: SDA P5 can also be remapped using Supermux I/O functions as defined in Table 6 and Table 7.

© Copyright 2022 Laird Connectivity
All Rights Reserved
Americas: +1-800-492-2320
Europe: +44-1628-858-940
Hong Kong: +852 2762 4823

20	P28	I/O	VDDIO	Recommended functions for P28 • PWM2 • SCL3 (master and slave) • Optical control output: QOC2 • A/D converter input 11 • Current: 16 mA sink P28 can also be remapped using Supermux I/O functions as defined in Table 6 and Table 7.
21	GND	-	-	Ground
22	3P0V	I	3V	Power supply input
23	GND	-	-	Ground
24	BT_UART_RTS	O, PU	VDDIO	Request to send (RTS) for HCI UART interface. Leave unconnected if not used.
25	BT_UART_TXD	O, PU	VDDIO	UART serial output. Serial data output for the HCI UART interface.
26	BT_UART_RXD	I	VDDIO	UART serial input. Serial data input for the HCI UART interface.
27	BT_UART_CTS	I, PU	VDDIO	Clear to send (CTS) for HCI UART interface. Leave unconnected if not used.
28	BT_DEV_WAKE	I	VDDIO	A signal from the CYW20820 device to the host indicating that the Bluetooth® device requires attention.
29	BT_HOST_WAKE	O	VDDIO	A signal from the host to the CYW20820 indicating that the host requires attention.
30	P12	I/O	VDDIO	Recommended functions for P12 • Keyboard scan output (column): KSO4 • A/D converter input 23 P12 can also be remapped using Supermux I/O functions as defined in Table 6 and Table 7.
31	P1	I/O	VDDIO	Recommended functions for P1 • Keyboard scan input (row): KSI1 • A/D converter input 28 • Peripheral UART: puart_rts • SPI_1: MISO (slave only) • UART1_RXD • Can also be remapped using Supermux I/O functions as defined in Table 6 and Table 7.

© Copyright 2022 Laird Connectivity
All Rights Reserved
Americas: +1-800-492-2320
Europe: +44-1628-858-940
Hong Kong: +852 2762 4823

32	P0	I/O	VDDIO	Recommended functions for P0 • Keyboard scan input (row): KSI0 • A/D converter input 29 • Peripheral UART: puart_tx • SPI_1: MOSI (master only) • UART1_TXD P0 can also be remapped using Supermux I/O functions as defined in Table 6 and Table 7.
33	P27	I/O	VDDIO	Recommended functions for P27 • Keyboard scan output (column): KSO19 • PWM1 • SPI_1: MOSI (master only) • Optical control output: QOC1 • Current: 16 mA sink P27 can also be remapped using Supermux I/O functions as defined in Table 6 and Table 7.
34	RST	I	VDDIO	Active-low system reset with internal pull-up resistor.
35	P29	I/O	VDDIO	Recommended functions for P29 • PWM3 • SDA3 (master and slave) • Optical control output: QOC3 • A/D converter input 10 • Current: 16 mA sink P29 can also be remapped using Supermux I/O functions as defined in Table 6 and Table 7.
36	P26	I/O	VDDIO	Recommended functions for P26 • Keyboard scan output (column): KSO18 • PWM0 • SPI_1: SPI_CS (slave only) • Optical control output: QOC0 • Current: 16 mA sink P26 can also be remapped using Supermux I/O functions as defined in Table 6 and Table 7.

© Copyright 2022 Laird Connectivity
All Rights Reserved
Americas: +1-800-492-2320
Europe: +44-1628-858-940
Hong Kong: +852 2762 4823

37	P4	I/O	VDDIO	Recommended functions for P4 • Keyboard scan input (row): KSI4 • Quadrature: QDY0 • SPI_1: MOSI (master only) P4 can also be remapped using Supermux I/O functions as defined in Table 6 and Table 7.
38	GND	-	-	Ground
39	GND	-	-	Ground
40	GND	-	-	Ground
41	GND	-	-	Ground
42	GND	-	-	Ground
43	GND	-	-	Ground
44	GND	-	-	Ground
45	GND	-	-	Ground
46	GND	-	-	Ground
47	GND	-	-	Ground
48	GND	-	-	Ground
49	GND	-	-	Ground
50	GND	-	-	Ground
51	GND	-	-	Ground
52	GND	-	-	Ground
53	GND	-	-	Ground
54	GND	-	-	Ground

© Copyright 2022 Laird Connectivity
All Rights Reserved
Americas: +1-800-492-2320
Europe: +44-1628-858-940
Hong Kong: +852 2762 4823

10.4 Reference schematic design

Same as MHF4 connector variant, suggest to put bypass capacitors 100nF in the 3P0V (pin22) and VDDIO (pin2).

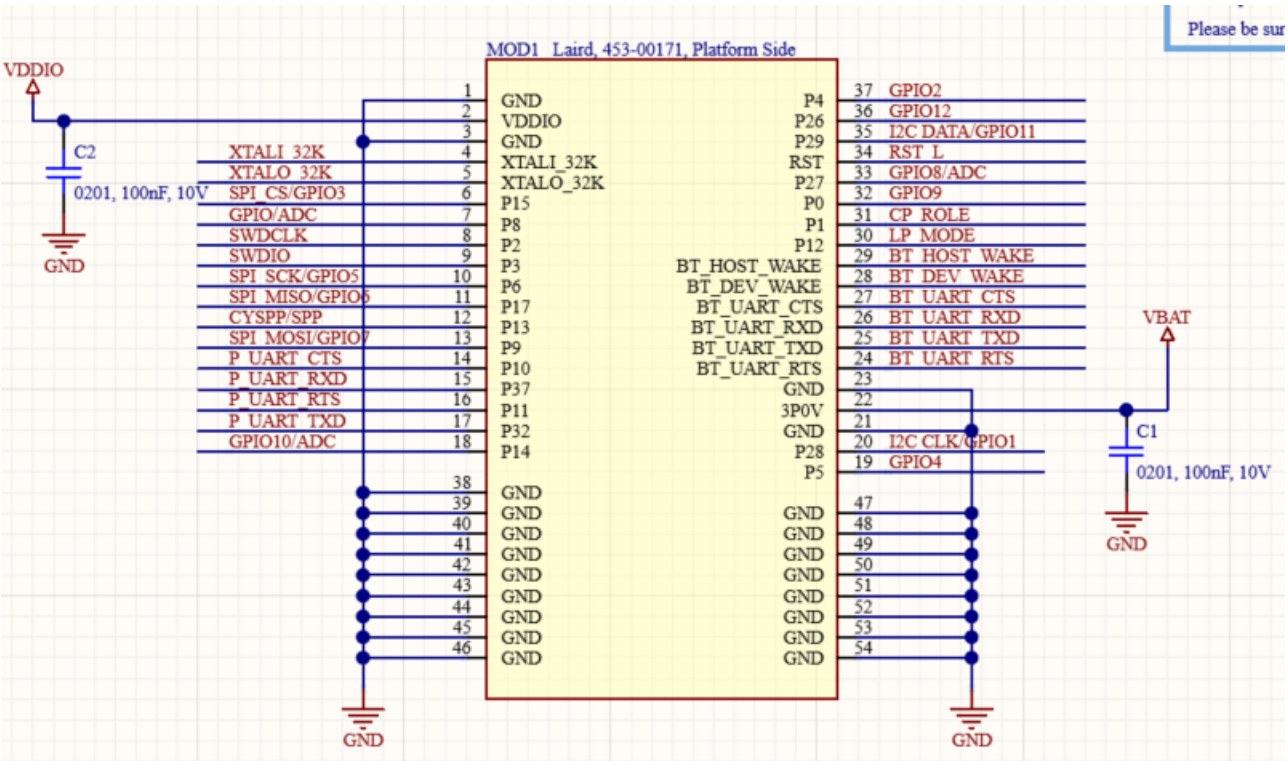

Figure 6: Integrated antenna variant schematic

© Copyright 2022 Laird Connectivity
All Rights Reserved
https://www.lairdconnect.com/
Americas: +1-800-492-2320
Europe: +44-1628-858-940
Hong Kong: +852 2762 4823

11 RF Layout Design Guidelines

11.1 General consideration

The following is a list of RF layout design guidelines and recommendation when installing a Laird Connectivity radio into your device.

- Do not run antenna cables directly above or directly below the radio.
- Do not place any parts or run any high-speed digital lines below the radio.
- If there are other radios or transmitters located on the device (such as a Bluetooth radio), place the devices as far apart from each other as possible. Also, make sure there is at least 25 dB isolation between these two antennas.
- Ensure that there is the maximum allowable spacing separating the antenna connectors on the Laird Connectivity radio from the antenna. In addition, do not place antennas directly above or directly below the radio.
- Laird Connectivity recommends the use of a double-shielded cable for the connection between the radio and the antenna elements.
- Be sure to put a 100nF capacitor on EACH power pin. Also, place that capacitor to the pin as close as possible to make sure the internal PMU working correctly.

Use proper electro-static-discharge (ESD) procedures when installing the Laird Connectivity radio module. To avoid negatively impacting Tx power and receiver sensitivity, do not cover the antennas with metallic objects or components.

© Copyright 2022 Laird Connectivity
All Rights Reserved
Americas: +1-800-492-2320
Europe: +44-1628-858-940
Hong Kong: +852 2762 4823

11.2 Layout recommendations for integrated antenna variant

1. Align module edge with PCB edge
2. In order to perform antenna radiation efficiency, keep at least 15mm width of the GND plane to the sides the module.

Please see the figure below for a layout example

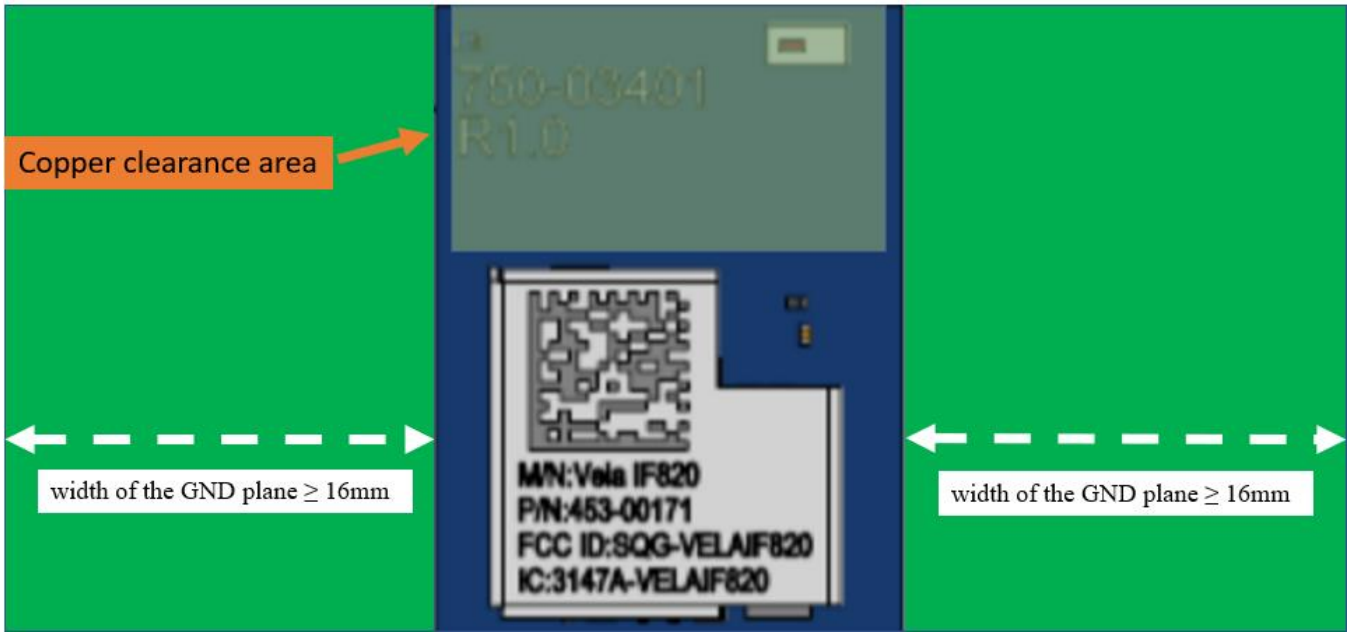

Figure 15: Integrated antenna variant layout suggestion example

© Copyright 2022 Laird Connectivity
All Rights Reserved
Americas: +1-800-492-2320
Europe: +44-1628-858-940
Hong Kong: +852 2762 4823

12 Application Note for Surface Mount Modules

12.1 Introduction

Laird Connectivity's surface mount modules are designed to conform to all major manufacturing guidelines. This application note is intended to provide additional guidance beyond the information that is presented in the user manual. This application note is considered a living document and will be updated as new information is presented.

The modules are designed to meet the needs of several commercial and industrial applications. They are easy to manufacture and conform to current automated manufacturing processes.

12.2 Base SiP Shipping

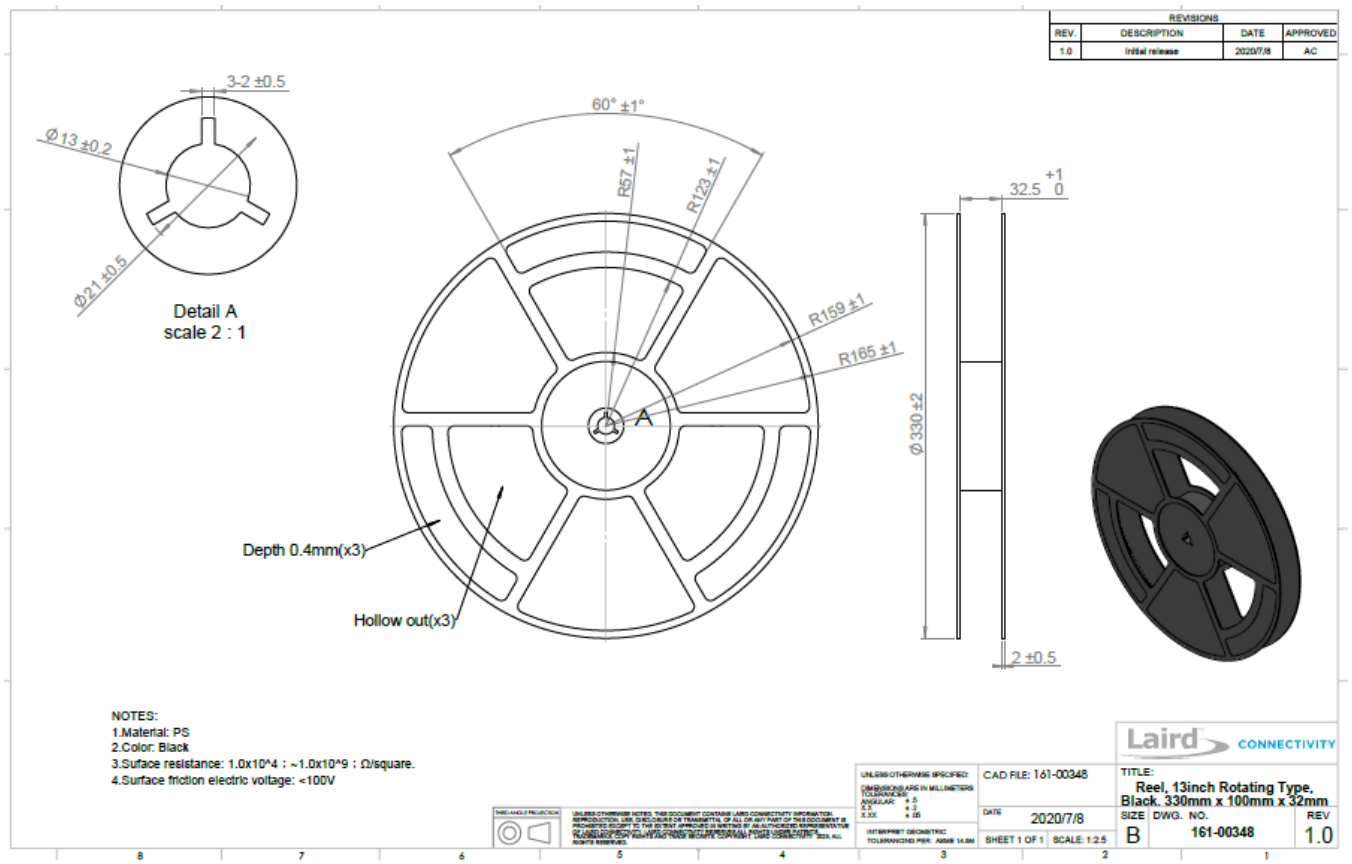

Figure 16: Reel specifications

© Copyright 2022 Laird Connectivity
All Rights Reserved
Americas: +1-800-492-2320
Europe: +44-1628-858-940
Hong Kong: +852 2762 4823

ITRM	W	A0	B0	K0	P	F	E	S0	D0	D1	P0	P2	T
DIM	32	20.30	18.30	3.20	28.00	14.20	1.75	28.40	1.50	2.00	4.00	2.00	0.40
TOLE	+0.30 -0.30	+0.10 -0.10	+0.10 -0.10	+0.10 -0.10	+0.10 -0.10	+0.10 -0.10	+0.10 -0.10	+0.10 -0.10	+0.10 -0.00	+0.10 -0.00	+0.10 -0.10	+0.10 -0.10	+0.05 -0.05

REVISIONS			
REV.	DESCRIPTION	DATE	APPROVED
1.0	Initial release	2021/5/12	AC

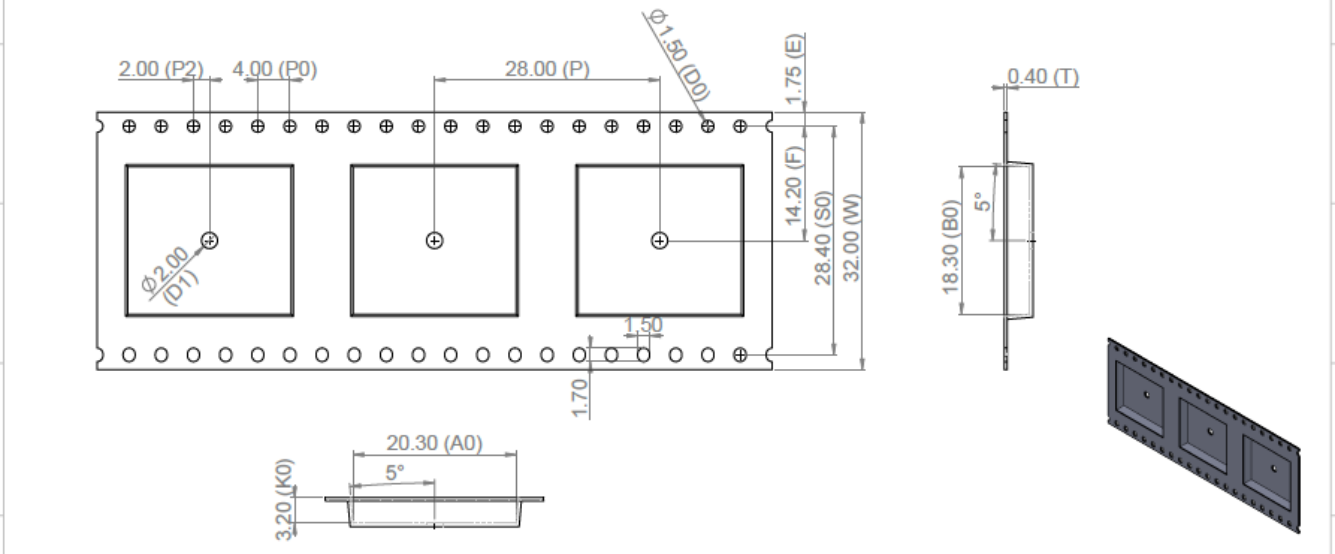

NOTES:
1.Material: Conductive polystyrene, Black
2.The number of meters per package:19.2M

CAD FILE: 161-00439
TITLE: Carrier Tape, Conductive Polystyrene, Black, 18.3mm x 20.3mm x 3.2mm
DATE 2021/5/12
SIZE B
DWG. NO. 161-00439
REV 1.0
SHEET 1 OF 1
SCALE: 2.5:1

Figure 17: Tape specifications, 161-00439

© Copyright 2022 Laird Connectivity
All Rights Reserved
https://www.lairdconnect.com/
Americas: +1-800-492-2320
Europe: +44-1628-858-940
Hong Kong: +852 2762 4823

ITEM NO.	PART NUMBER	REV.	DESCRIPTION	QTY.
1	453-00075	1.0	Module, Sterling 70 Series	650
2	161-00439	1.0	Carrier Tape, Conductive Polystyrene, Black, 18.3mm x 20.3mm x 3.2mm	1
3	161-00352	1.0	Cover Tape, Anti-static Polyester, 25.5mm x 0.05mm	1
4	161-00438	1.0	Desiccant, Silica Gel, 56g, 125mm x 80mm	1
5	161-00236	1.0	Humidity Indicator Card, Minimum 60% RH, Three Spot Indication, 3in x 2in	1
6	161-00437	1.0	Bag, ESD and Moisture Barrier, Silver, 465mm x 400mm x 0.15mm	1
7	161-00436	1.0	Bag, ESD Barrier, Bubble, Pink, 420mm x 420mm	1
8	161-00435	1.0	Box, Single-Wall Corrugated E Flute, 363mm x 345mm x 64mm	1
9	161-00348	1.0	Reel, 13inch Rotating Type, Black, 330mm x 100mm x 32mm	1
10	161-00434	1.0	Carton, Double-Wall, AB Flute, 370mm x 273mm x 363mm	1
11	160-02147	1.0	Label, Product Identifier, Sterling 70 SIP, 110mm x 55mm	3
12	160-02142	1.0	Label, Carton Product Identifier, Sterling 70 SIP, 101mm x 140mm	2

REVISIONS			
REV.	DESCRIPTION	DATE	APPROVED
1.0	Initial release	2021/5/12	AC

Notes:
1.Put the Module in the carrier tape and cover the tape.
2.Put the Reel, Desiccant and Humidity Indicator Card in the ESD bag.
3.Put the ESD bag (vacuum) and Bubble bag in the box.
4.Put four box in the carton.
5.Module packaging quantity:
Per Reel: 650 PCS
Per Carton: 2600PCS
6.Carton label is on the diagonal of the carton.

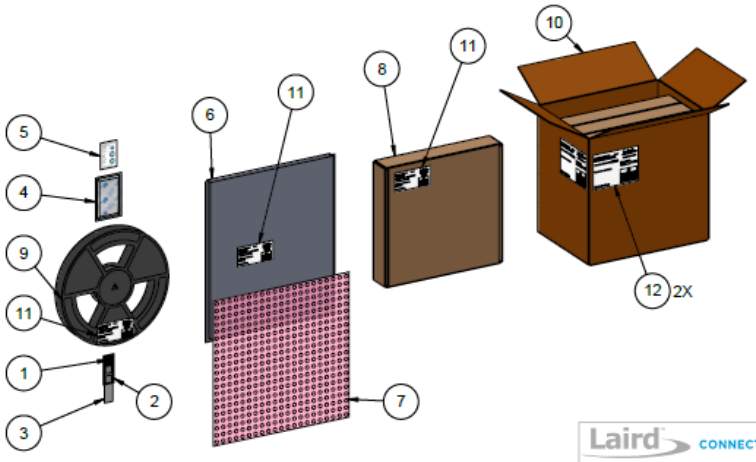

CAD FILE: 453-00075R
TITLE: Module, Sterling 70 Series, Tape and Reel
DATE 2021/5/12
SIZE B
DWG. NO. 453-00075R
REV 1.0
SHEET 1 OF 1
SCALE: 1:8.5

Figure 18: Vela IF820 packaging process

12.3 M.2 Module Shipping

All modems are shipped in trays and sealed in ESD Bags.

© Copyright 2022 Laird Connectivity
All Rights Reserved
Americas: +1-800-492-2320
Europe: +44-1628-858-940
Hong Kong: +852 2762 4823

12.4 Labelling

The following labels are located on the antistatic bag.

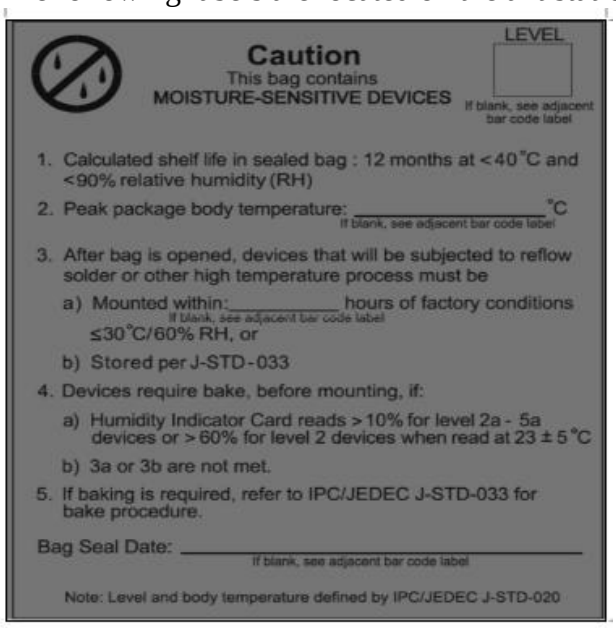

Figure 19: Anti-static bag label – 1

TBD

Figure 20: Anti-static bag label – 2

The following label is located on the pizza box.
TBD

Figure 21: Box label

The following package label is located on adjacent sides of the master carton.
TBD

Figure 21: Master carton package label

12.5 Required Storage Conditions

12.5.1 Prior to Opening the Dry Packing

The following are required storage conditions ***prior* to opening the dry packing**:

- Normal temperature: 5~40˚C
- Normal humidity: 80% (Relative humidity) or less
- Storage period: One year or less

Note: Humidity means relative humidity.

© Copyright 2022 Laird Connectivity
All Rights Reserved
Americas: +1-800-492-2320
Europe: +44-1628-858-940
Hong Kong: +852 2762 4823

12.5.2 After Opening the Dry Packing

The following are required storage conditions ***after* opening the dry packing** (to prevent moisture absorption):

- Storage conditions for one-time soldering:
  - Temperature: 5-25°C
  - Humidity: 60% or less
  - Period: 72 hours or less after opening
- Storage conditions for two-time soldering
  - Storage conditions following opening and prior to performing the 1st reflow:
    - Temperature: 5-25°C
    - Humidity: 60% or less
    - Period: A hours or less after opening
  - Storage conditions following completion of the 1st reflow and prior to performing the 2nd reflow
    - Temperature: 5-25°C
    - Humidity: 60% or less
    - Period: B hours or less after completion of the 1st reflow

Note: Should keep A+B within 72 hours.

12.5.3 Temporary Storage Requirements after Opening

The following are temporary storage requirements after opening:

- Only re-store the devices *once* prior to soldering.
- Use a dry box or place desiccant (with a blue humidity indicator) with the devices and perform dry packing again using vacuumed heat-sealing.

The following indicate the required storage period, temperature, and humidity for this temporary storage:

- Storage temperature and humidity:

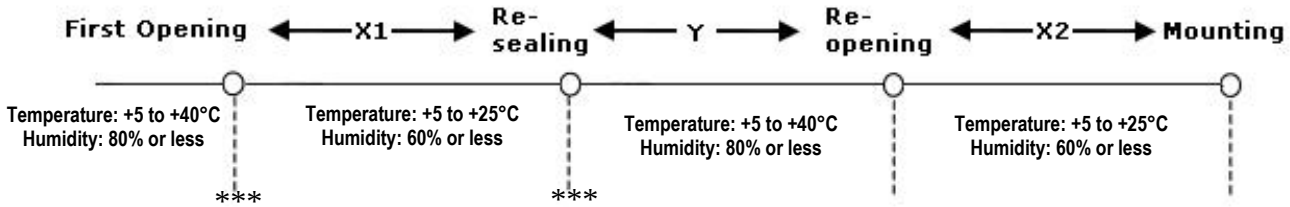

*** - External atmosphere temperature and humidity of the dry packing

- Storage period:
  - X1+X2 – Refer to After Opening the Dry Packing storage requirements. Keep is X1+X2 within 72 hours.
  - Y – Keep within two weeks or less.

12.6 Baking Conditions

Baking conditions and processes for the module follow the J-STD-033 standard which includes the following:

- The calculated shelf life in a sealed bag is 12 months at <40℃ and <80% relative humidity.
- Once the packaging is opened, the SiP must be mounted (per MSL4/Moisture Sensitivity Level 4) within 72 hours at <30˚C and <60% relative humidity.
- If the SiP is not mounted within 72 hours or if, when the dry pack is opened, the humidity indicator card displays >10% humidity, then the product must be baked for 48 hours at 125 ˚C (±5 ˚C).

© Copyright 2022 Laird Connectivity
All Rights Reserved
Americas: +1-800-492-2320
Europe: +44-1628-858-940
Hong Kong: +852 2762 4823

12.7 Surface Mount Conditions

The following soldering conditions are recommended to ensure device quality.

12.7.1 Soldering

Note: When soldering, the stencil thickness should be ≥ 0.1 mm.

Convection reflow or IR/Convection reflow (one-time soldering or two-time soldering in air or nitrogen environment)

- Measuring point – IC package surface
- Temperature profile:

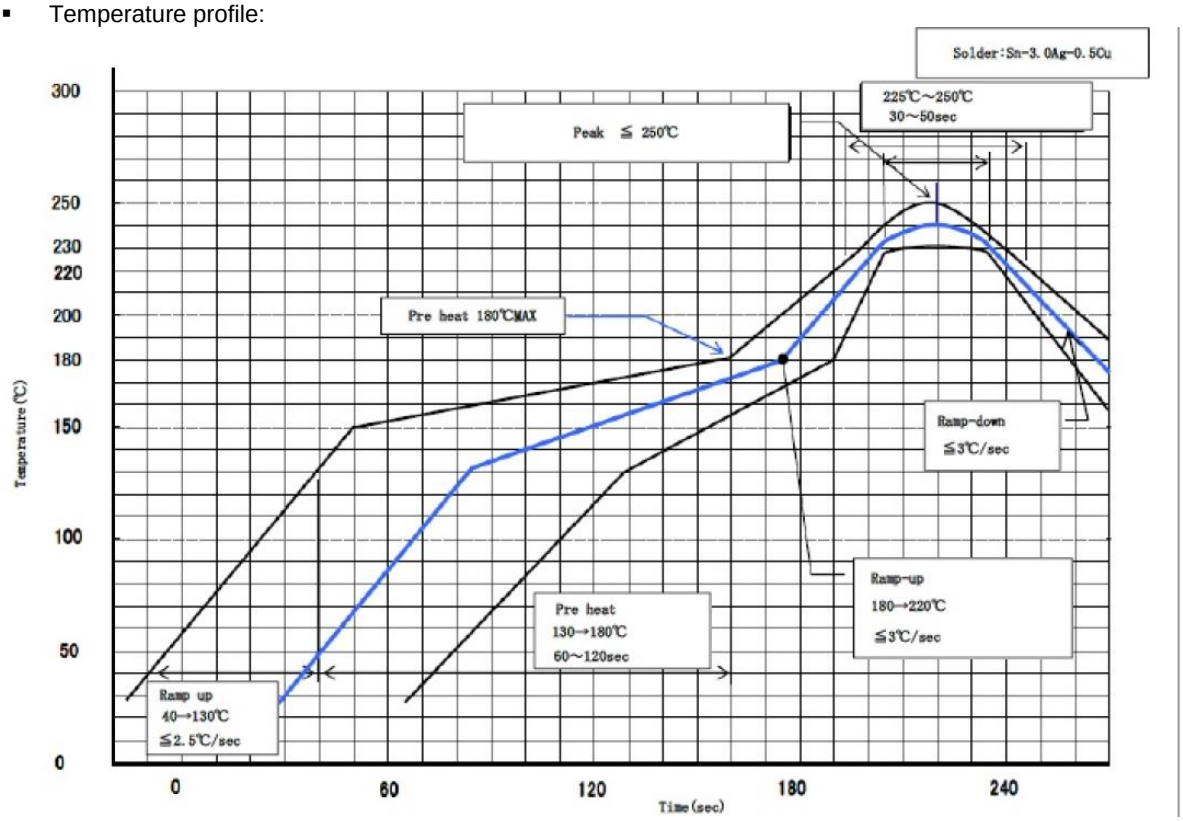

Figure 22: Temperature profile

- Ramp-up: 40-130˚C. Less than 2.5˚C/sec
- Pre heat: 130-180˚C 60-120 sec, 180˚C MAX
- Ramp-up: 180-220˚C. Less than 3˚C/sec
- Peak Temperature: MAX 250˚C
    - 225˚C ~ 250˚C, 30 ~ 50 sec
- Ramp-down: Less than 3˚C/sec

© Copyright 2022 Laird Connectivity
All Rights Reserved
Americas: +1-800-492-2320
Europe: +44-1628-858-940
Hong Kong: +852 2762 4823

12.7.2 Cautions When Removing the SIP from the Platform for RMA

- Bake the platform before removing the SIP from the platform. Reference baking conditions.
- Remove the SIP by using a hot air gun. This process should be carried out by a skilled technician.

Suggestion conditions:

- One-side component platform:
  - Set the hot plate at 280°C.
  - Put the platform on the hot plate for 8~10 seconds.
  - Remove the SIP from platform.
- Two-side components platform:
  - Use two hot air guns
  - On the bottom side, use a pre-heated nozzle (temperature setting of 200~250°C) at a suitable distance from the platform PCB.
  - On the top side, apply a remove nozzle (temperature setting of 330°C). Heat the SIP until it can be removed from platform PCB.

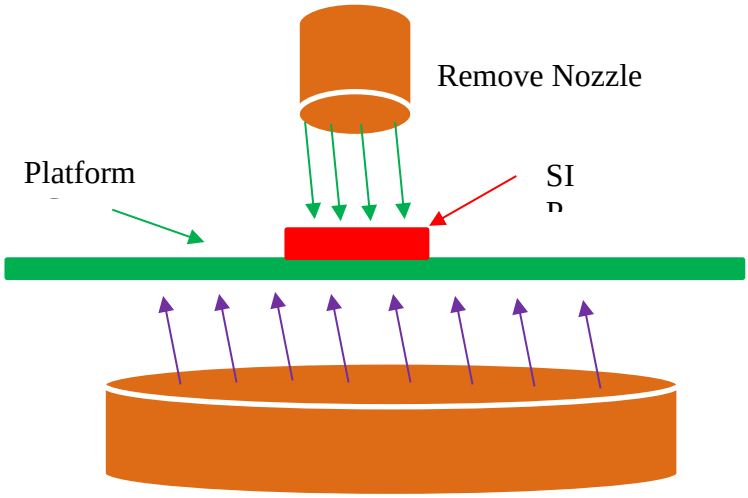

- Remove the residue solder under the bottom side of SIP. (Note: Alternate module pictured as an example)

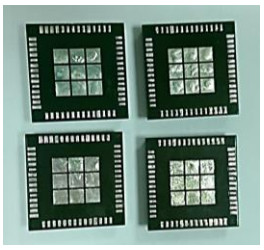

(Not accepted for RMA)

Example SIP with residue solder on the bottom

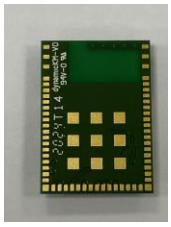

(Accepted for RMA analysis)

Example Module, no residue solder

- Remove and clean the residue flux as needed.

12.7.3 Precautions for Use

- Opening/handing/removing must be done on an anti-ESD treated workbench. All workers must also have undergone anti-ESD treatment.
- The devices should be mounted within one year of the date of delivery.
- The Vela IF820 modules are MSL level 4.

https://www.lairdconnect.com/
© Copyright 2022 Laird Connectivity
All Rights Reserved
Americas: +1-800-492-2320
Europe: +44-1628-858-940
Hong Kong: +852 2762 4823

13 Reliability Test

13.1 Climatic And Dynamic

Table 5: Climatic and Dynamic Reliability Test Results for Lyra 24P USB Adapter

Test Item	Specification	Standard	Test Result
Thermal Shock	1. Temperature: -40 ~ 85℃ 2. Ramp time: Less than 10 seconds. 3. Dwell Time: 10 minutes 4. Number of Cycles: 500 times	*JESD22-A106 *IEC 60068-2-14 for dwell time and number of cycles	Pass
Vibration Non-operating Unpackaged device	1. Vibration Wave Form: Sine Waveform 2. Vibration frequency / Displacement: 20-80 Hz/1.5mm 3. Vibration frequency / Acceleration: 80-2000 Hz/20g 4. Cycle Time: 4 min/cycle 5. Number of Cycles: 4 cycle/axis 6. Vibration Axes：X, Y and Z (Rotate each axis on vertical vibration table)	JEDEC 22-B103B (2016)	Pass
Mechanical Shock Non-operating Unpackaged device	1. Pulse shape: Half-sine waveform 2. Impact acceleration: 1500 g 3. Pulse duration: 0.5 ms 4. Number of shocks: 30 shocks (5 shocks for each face) 5. Orientation: Bottom, top, left, right, front and rear faces	JEDEC 22-B110B.01 (2019)	Pass

© Copyright 2022 Laird Connectivity
All Rights Reserved
Americas: +1-800-492-2320
Europe: +44-1628-858-940
Hong Kong: +852 2762 4823

13.3 Reliability MTBF Prediction

Table 6: MTBF Prediction for Lyra 24P Modules

Laird Part Number	Environment	Test Result 40 ℃ (Hours)
453-00171R 453-00171C	Ground, Fixed, Uncontrolled	TBD
453-00172R 453-00172C	Ground, Fixed, Uncontrolled	TBD
453-00171R 453-00171C	Mobile, Fixed, Uncontrolled	TBD
453-00172R 453-00172C	Mobile, Fixed, Uncontrolled	TBD
Laird Part Number	**Environment**	**Test Result 85 ℃ (Hours)**
453-00171R 453-00171C	Ground, Fixed, Uncontrolled	TBD
453-00172R 453-00172C	Ground, Fixed, Uncontrolled	TBD
453-00171R 453-00171C	Mobile, Fixed, Uncontrolled	TBD
453-00172R 453-00172C	Mobile, Fixed, Uncontrolled	TBD

14 REGULATORY

Note: For complete regulatory information, refer to the Vela IF820 document which is also available from the Vela IF820 product page.

The Vela IF820 holds current certifications in the following countries:

Table 20: Vela IF820 Regions of Certifications

Country/Region	Regulatory ID
USA (FCC)	SQG-VELAIF820
EU	N/A
UKCA	N/A
Canada (ISED)	3147A-VELAIF820
Japan (MIC)	201-230307
Australia (RCM)	N/A
New Zealand (RCM)	N/A
Korea	R-C-L8C-VELAIF820

© Copyright 2022 Laird Connectivity
All Rights Reserved
Americas: +1-800-492-2320
Europe: +44-1628-858-940
Hong Kong: +852 2762 4823

Table 21: Vela IF820 Approved Antenna

Laird Model	Laird Part Number	Type	Gain 2.4GHz
NanoBlue	EBL2400A1-10MH4L	PCB Dipole	2dBi
FlexPIFA	001-0022	PCB Dipole	2dBi
EDA-8709-2G4C1-B27-CY	0600-00057	IPEX MHF4	2.3dBi
mFlexPIFA	EFA2400A3S-10MH4L	IPEX MHF4	2dBi

© Copyright 2022 Laird Connectivity
All Rights Reserved
Americas: +1-800-492-2320
Europe: +44-1628-858-940
Hong Kong: +852 2762 4823

15 Ordering Information

Table 22: Orderable Vela IF820 part numbers

Part	Description
453-00171R	Vela IF820 - Dual Mode Bluetooth Module, Integrated Antenna (Infineon CYW20820) - Tape / Reel
453-00171C	Vela IF820 - Dual Mode Bluetooth Module, Integrated Antenna (Infineon CYW20820) – Cut / Tape
453-00172R	Vela IF820 - Dual Mode Bluetooth Module, MHF4 Connector (Infineon CYW20820) - Tape / Reel
453-00172C	Vela IF820 - Dual Mode Bluetooth Module, MHF4 Connector (Infineon CYW20820) – Cut / Tape
453-00171-K1	Vela IF820 - Development Kit with integrated chip antenna
453-00172-K1	Vela IF820 - Development Kit with MHF4 Connector
450-00185	Vela IF820 - Dual Mode Bluetooth USB Adapter with integrated antenna (Infineon CYW20820)

15.1 General Comments

This is a preliminary datasheet. Please check with Laird Connectivity for the latest information before commencing a design. If in doubt, ask. For additional information visit Vela IF820 product page

© Copyright 2022 Laird Connectivity
All Rights Reserved
Americas: +1-800-492-2320
Europe: +44-1628-858-940
Hong Kong: +852 2762 4823

16 Bluetooth SIG Qualification

16.1 Overview

The Vela IF820 module is listed on the Bluetooth SIG website as a qualified Controller Subsystem.

Table 22: Vela IF820 Listing and QDID

Design Name	Owner	Declaration ID	Link to listing on the SIG website
Vela IF820	Laird Connectivity		

It is a mandatory requirement of the Bluetooth Special Interest Group (SIG) that every product implementing Bluetooth technology has a Declaration ID. Every Bluetooth design is required to go through the qualification process, even when referencing a Bluetooth Design that already has its own Declaration ID. The Qualification Process requires each company to register as a member of the Bluetooth SIG – www.bluetooth.org
The following is a link to the Bluetooth Registration page: https://www.bluetooth.org/login/register/
For each Bluetooth Design, it is necessary to purchase a Declaration ID. This can be done before starting the new qualification, either through invoicing or credit card payment. The fees for the Declaration ID will depend on your membership status, please refer to the following webpage:
https://www.bluetooth.org/en-us/test-qualification/qualification-overview/fees
For a detailed procedure of how to obtain a new Declaration ID for your design, please refer to the following SIG document, (login is required to views this document):
https://www.bluetooth.org/DocMan/handlers/TBD

16.2 Qualification Steps When Referencing a Laird Connectivity Controller Subsystem Design

To qualify your product when referencing a Laird Connectivity Controller Subsystem design, follow these steps:

1. To start a listing, go to: https://www.bluetooth.org/tpg/QLI_SDoc.cfm

   Note: A username and password are required to access this site.

2. In step 1, select the option, New Listing and Reference a Qualified Design.
3. Enter D056403 in the Controller Subsystem table entry.
4. Enter your complimentary Host Subsystem and optional Profile Subsystem QDID in the table entry.
5. Select your pre-paid Declaration ID from the drop-down menu or go to the Purchase Declaration ID page.

   Note: Unless the Declaration ID is pre-paid or purchased with a credit card, you cannot proceed until the SIG invoice is paid.

6. Once all the relevant sections of step 1 are finished, complete steps 2, 3, and 4 as described in the help document accessible from the site.

Your new design will be listed on the SIG website and you can print your Certificate and DoC.
For further information please refer to the following training material:
https://www.bluetooth.org/en-us/test-qualification/qualification-overview/listing-process-updates

© Copyright 2022 Laird Connectivity
All Rights Reserved
Americas: +1-800-492-2320
Europe: +44-1628-858-940
Hong Kong: +852 2762 4823

If you require assistance with the qualification process please contact our recommended Bluetooth Qualification Expert (BQE), Steve Flooks, steve.flooks@eurexuk.com.

© Copyright 2022 Laird Connectivity
All Rights Reserved
Americas: +1-800-492-2320
Europe: +44-1628-858-940
Hong Kong: +852 2762 4823

17 Chip Antenna Performance

17.1 Summary of Antenna Performance

Unit in dBi	XY-plane		XZ-plane		YZ-plane		Efficiency
	Peak	Avg.	Peak	Avg.	Peak	Avg.	
@2400MHz	-1.4	-2.6	-2.1	-5	0.1	-2.8	45%
@2440MHz	-1.5	-2.3	-1.2	-4.3	0.6	-2.3	51%
@2480MHz	-2.1	-2.7	-1.8	-4.4	0.2	-2.7	48%

Note : The result is measured with Laird DVK part # 453-00171-K1

17.2 2.4GHz Radiated Performance

2400MHz radiation pattern

◆XY-plane

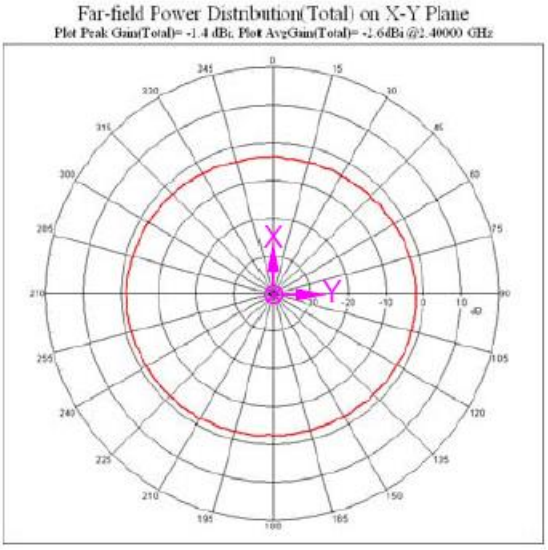

◆XZ-plane

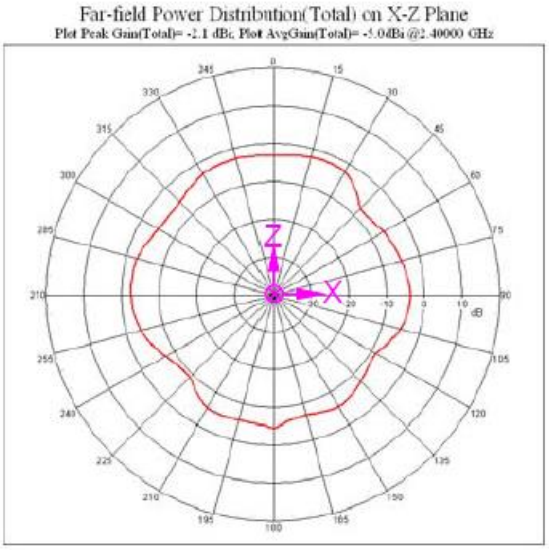

© Copyright 2022 Laird Connectivity
All Rights Reserved
Americas: +1-800-492-2320
Europe: +44-1628-858-940
Hong Kong: +852 2762 4823

◆YZ-plane

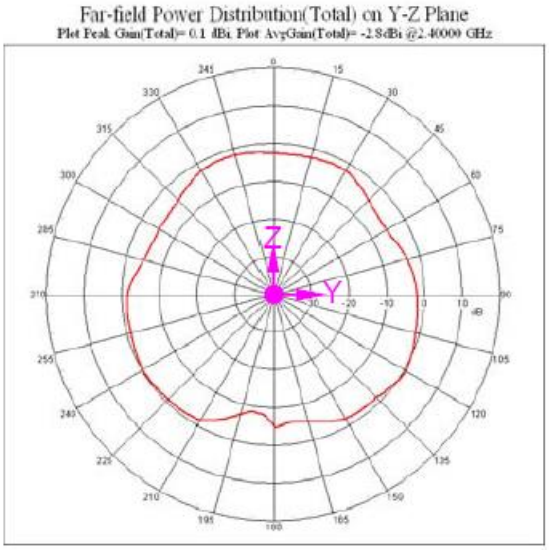

2440MHz radiation pattern

◆XY-plane

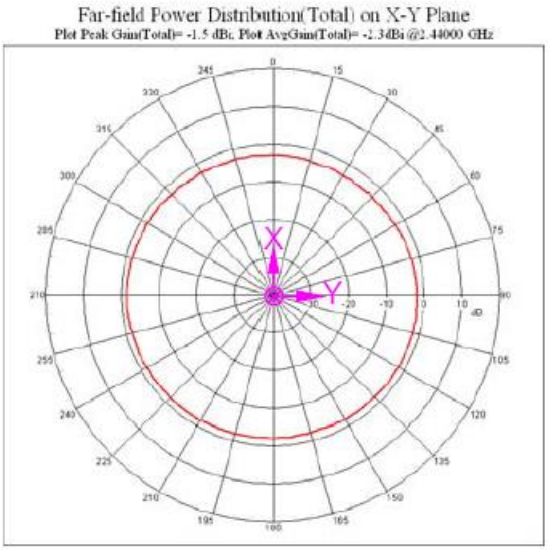

◆XZ-plane

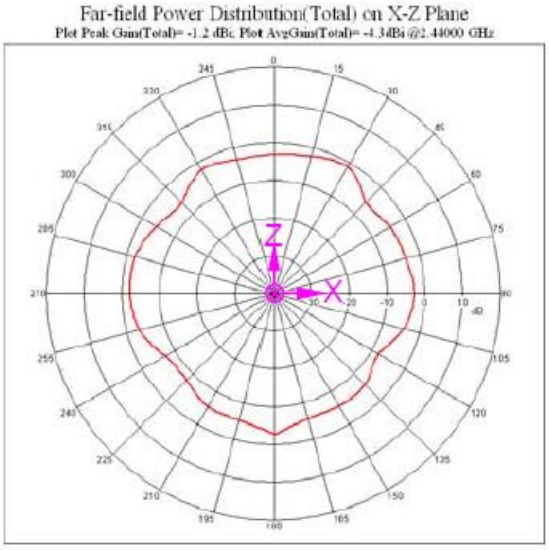

© Copyright 2022 Laird Connectivity
All Rights Reserved
https://www.lairdconnect.com/
Americas: +1-800-492-2320
Europe: +44-1628-858-940
Hong Kong: +852 2762 4823

◆YZ-plane

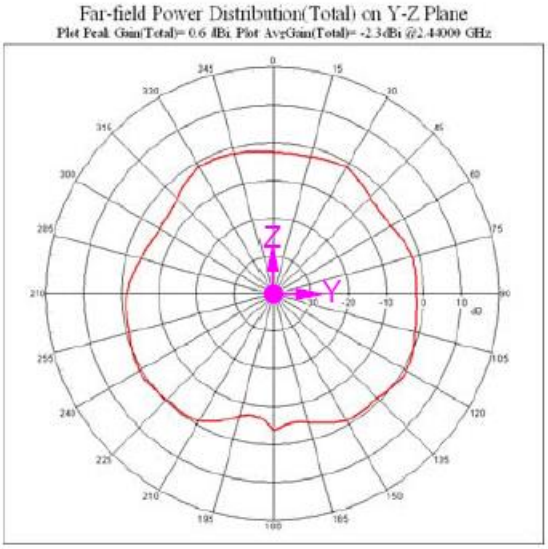

2480MHz radiation pattern

◆XY-plane

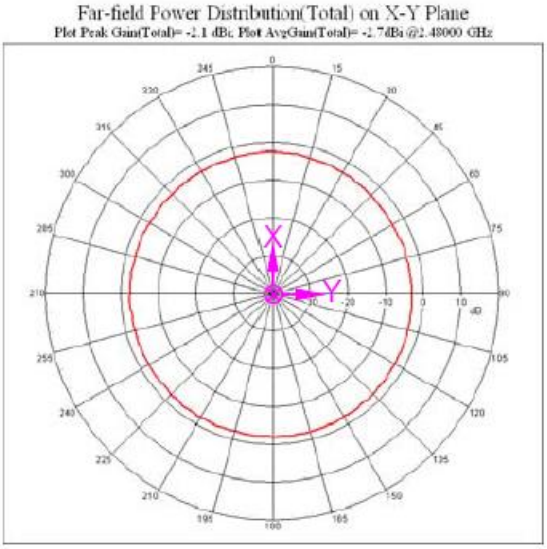

◆XZ-plane

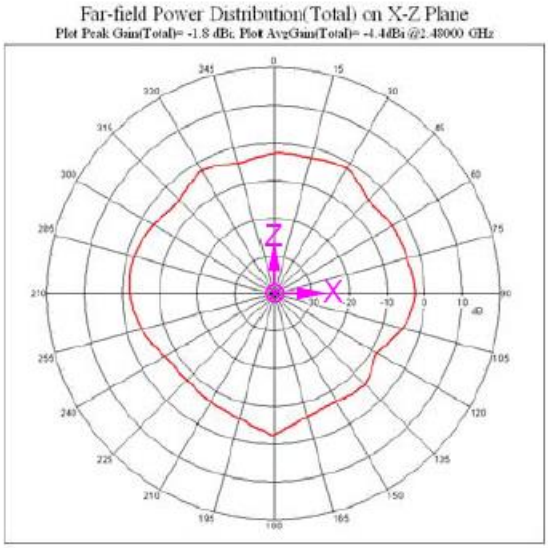

© Copyright 2022 Laird Connectivity
All Rights Reserved
https://www.lairdconnect.com/
Americas: +1-800-492-2320
Europe: +44-1628-858-940
Hong Kong: +852 2762 4823

◆YZ-plane

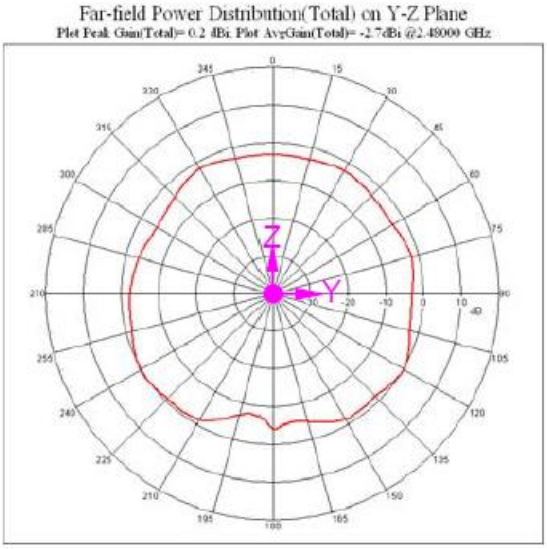

© Copyright 2022 Laird Connectivity
All Rights Reserved
https://www.lairdconnect.com/
Americas: +1-800-492-2320
Europe: +44-1628-858-940
Hong Kong: +852 2762 4823

18 Additional Assistance

Please contact your local sales representative or our support team for further assistance:
Laird Connectivity
Support Centre: https://www.lairdconnect.com/resources/support

Email: wireless.support@lairdconnectivity.com

Phone: Americas: +1-800-492-2320
Europe: +44-1628-858-940
Hong Kong: +852 2923 0610

Web: https://www.lairdconnect.com/products

Note: Information contained in this document is subject to change.

© Copyright 2022 Laird Connectivity. All Rights Reserved. Patent pending. Any information furnished by Laird Connectivity and its agents is believed to be accurate and reliable. All specifications are subject to change without notice. Responsibility for the use and application of Laird Connectivity materials or products rests with the end user since Laird Connectivity and its agents cannot be aware of all potential uses. Laird Connectivity makes no warranties as to non-infringement nor as to the fitness, merchantability, or sustainability of any Laird Connectivity materials or products for any specific or general uses. Laird Connectivity or any of its affiliates or agents shall not be liable for incidental or consequential damages of any kind. All Laird Connectivity products are sold pursuant to the Laird Connectivity Terms and Conditions of Sale in effect from time to time, a copy of which will be furnished upon request. Nothing herein provides a license under any Laird Connectivity or any third-party intellectual property right.

This equipment has been tested and found to comply with the limits for a Class B digital device, pursuant to Part 15 of the FCC Rules. These limits are designed to provide reasonable protection against harmful interference in a residential installation. This equipment generates, uses and can radiate radio frequency energy and, if not installed and used in accordance with the instructions, may cause harmful interference to radio communications. However, there is no guarantee that interference will not occur in a

© Copyright 2022 Laird Connectivity
All Rights Reserved

particular installation. If this equipment does cause harmful interference to radio or television reception, which can be determined by turning the equipment off and on, the user is encouraged to try to correct the interference by one of the following measures:

- Reorient or relocate the receiving antenna.
- Increase the separation between the equipment and receiver.
- Connect the equipment into an outlet on a circuit different from that to which the receiver is connected.
- Consult the dealer or an experienced radio/TV technician for help.

FCC Caution: Any changes or modifications not expressly approved by the party responsible for compliance could void the user's authority to operate this equipment.

This device complies with Part 15 of the FCC Rules. Operation is subject to the following two conditions: (1) This device may not cause harmful interference, and (2) this device must accept any interference received, including interference that may cause undesired operation.

IMPORTANT NOTE:
Radiation Exposure Statement:
This equipment complies with FCC radiation exposure limits set forth for an uncontrolled environment. This equipment should be installed and operated with minimum distance 20cm between the radiator & your body.

This transmitter must not be co-located or operating in conjunction with any other antenna or transmitter.

Country Code selection feature to be disabled for products marketed to the US/CANADA

© Copyright 2022 Laird Connectivity
All Rights Reserved
Americas: +1-800-492-2320
Europe: +44-1628-858-940
Hong Kong: +852 2762 4823

Integration instructions for host product manufacturers

Applicable FCC rules to module

FCC Part 15.247

Summarize the specific operational use conditions

The module is must be installed in mobile device.

This device is intended only for OEM integrators under the following conditions:

1) The antenna must be installed such that 20 cm is maintained between the antenna and users, and
2) The transmitter module may not be co-located with any other transmitter or antenna

As long as 2 conditions above are met, further transmitter test will not be required. However, the OEM integrator is still responsible for testing their end-product for any additional compliance requirements required with this module installed.

IMPORTANT NOTE: In the event that these conditions can not be met (for example certain laptop configurations or co-location with another transmitter), then the FCC authorization is no longer considered valid and the FCC ID can not be used on the final product. In these circumstances, the OEM integrator will be responsible for re-evaluating the end product (including the transmitter) and obtaining a separate FCC authorization. The OEM integrator has to be aware not to provide information to the end user regarding how to install or remove this RF module in the user's manual of the end product which integrates this module.

The end user manual shall include all required regulatory information/warning as show in this manual.

Limited module procedures

Not applicable

Trace antenna designs

Not applicable

RF exposure considerations

Co-located issue shall be met as mentioned in "Summarize the specific operational use conditions".

Product manufacturer shall provide below text in end-product manual

"Radiation Exposure Statement:

The product comply with the US portable RF exposure limit set forth for an uncontrolled environment and are safe for intended operation as described in this manual. The further RF exposure reduction can be achieved if the product can be kept as far as possible from the user body or set the device to lower output power if such function is available.."

Antennas

Ant. No.	Manufacturer	Model	Laird Part Number	Type	Connector	Gain
1	Laird	NanoBlue	EBL2400A1-10MH4L	PCB Dipole	IPEX MHF4	2dBi
2	Laird	FlexPIFA	001-0022	PCB Dipole	IPEX MHF4	2dBi
3	Mag.Layers	EDA-8709-2G4C1-B27-CY	0600-00057	Dipole	IPEX MHF4	2.32dBi
4	Laird	mFlexPIFA	EFA2400A3S-10MH4L	PIFA	IPEX MHF4	2dBi
5	ACX	AD1608	AD1608-A2455AAT/LF	Chip Antenna	N/A	1dBi

© Copyright 2022 Laird Connectivity
All Rights Reserved
Americas: +1-800-492-2320
Europe: +44-1628-858-940
Hong Kong: +852 2762 4823

Label and Compliance Information
Product manufacturers need to provide a physical or e-label stating
"Contains FCC ID: SQG-VELAIF820" with finished product
Information on Test Modes and Additional Testing Requirements
Test tool: cybluetool
Additional Testing, Part 15 Subpart B Disclaimer
The module is only FCC authorized for the specific rule parts listed on the grant, and that the host product manufacturer is responsible for compliance to any other FCC rules that apply to the host not covered by the modular transmitter grant of certification. The final host product still requires Part 15 Subpart B compliance testing with the modular transmitter installed

This device contains licence-exempt transmitter(s)/receiver(s) that comply with Innovation, Science and Economic Development Canada's licence-exempt RSS(s). Operation is subject to the following two conditions:

(1) This device may not cause interference
(2) This device must accept any interference, including interference that may cause undesired operation of the device

L'émetteur/récepteur exempt de licence contenu dans le présent appareil est conforme aux CNR d'Innovation, Sciences et Développement économique Canada applicables aux appareils radio exempts de licence. L'exploitation est autorisée aux deux conditions suivantes :
(1) L'appareil ne doit pas produire de brouillage;
(2) L'appareil doit accepter tout brouillage radioélectrique subi, même si le brouillage est susceptible d'en compromettre le fonctionnement.

This radio transmitter [IC: 3147A-VELAIF820] has been approved by Innovation, Science and Economic Development Canada to operate with the antenna types listed below, with the maximum permissible gain indicated. Antenna types not included in this list that have a gain greater than the maximum gain indicated for any type listed are strictly prohibited for use with this device.

© Copyright 2022 Laird Connectivity
All Rights Reserved
Americas: +1-800-492-2320
Europe: +44-1628-858-940
Hong Kong: +852 2762 4823

Le présent émetteur radio [IC: 3147A-VELAIF820] a été approuvé par Innovation, Sciences et Développement économique Canada pour fonctionner avec les types d'antenne énumérés ci-dessous et ayant un gain admissible maximal. Les types d'antenne non inclus dans cette liste, et dont le gain est supérieur au gain maximal indiqué pour tout type figurant sur la liste, sont strictement interdits pour l'exploitation de l'émetteur.

Ant. No.	Manufacturer	Model	Laird Part Number	Type	Connector	Gain
1	Laird	NanoBlue	EBL2400A1-10MH4L	PCB Dipole	IPEX MHF4	2dBi
2	Laird	FlexPIFA	001-0022	PCB Dipole	IPEX MHF4	2dBi
3	Mag.Layers	EDA-8709-2G4C1-B27-CY	0600-00057	Dipole	IPEX MHF4	2.32dBi
4	Laird	mFlexPIFA	EFA2400A3S-10MH4L	PIFA	IPEX MHF4	2dBi
5	ACX	AD1608	AD1608-A2455AAT/LF	Chip Antenna	N/A	1dBi

© Copyright 2022 Laird Connectivity
All Rights Reserved
https://www.lairdconnect.com/
Americas: +1-800-492-2320
Europe: +44-1628-858-940
Hong Kong: +852 2762 4823

Radiation Exposure Statement:
This equipment complies with Canada radiation exposure limits set forth for an uncontrolled environment. This equipment should be installed and operated with minimum distance 20cm between the radiator & your body.

Déclaration d'exposition aux radiations:
Cet équipement est conforme Canada limites d'exposition aux radiations dans un environnement non contrôlé. Cet équipement doit être installé et utilisé à distance minimum de 20cm entre le radiateur et votre corps.

1) The transmitter module may not be co-located with any other transmitter or antenna.

As long as 1 condition above are met, further transmitter test will not be required. However, the OEM integrator is still responsible for testing their end-product for any additional compliance requirements required with this module installed.

1) Le module émetteur peut ne pas être coïmplanté avec un autre émetteur ou antenne.

Tant que les 1 condition ci-dessus sont remplies, des essais supplémentaires sur l'émetteur ne seront pas nécessaires. Toutefois, l'intégrateur OEM est toujours responsable des essais sur son produit final pour toutes exigences de conformité supplémentaires requis pour ce module installé.

IMPORTANT NOTE:

In the event that these conditions can not be met (for example certain laptop configurations or co-location with another transmitter), then the Canada authorization is no longer considered valid and the IC ID can not be used on the final product. In these circumstances, the OEM integrator will be responsible for re-evaluating the end product (including the transmitter) and obtaining a separate Canada authorization.

NOTE IMPORTANTE:

Dans le cas où ces conditions ne peuvent être satisfaites (par exemple pour certaines configurations d'ordinateur portable ou de certaines co-localisation avec un autre émetteur), l'autorisation du Canada n'est plus considéré comme valide et l'ID IC ne peut pas être utilisé sur le produit final. Dans ces circonstances, l'intégrateur OEM sera chargé de réévaluer le produit final (y compris l'émetteur) et l'obtention d'une autorisation distincte au Canada.

End Product Labeling

© Copyright 2022 Laird Connectivity
All Rights Reserved
Americas: +1-800-492-2320
Europe: +44-1628-858-940
Hong Kong: +852 2762 4823

The final end product must be labeled in a visible area with the following: “Contains IC: 3147A-VELAIF820”.

Plaque signalétique du produit final

Le produit final doit être étiqueté dans un endroit visible avec l'inscription suivante: "Contient des IC: 3147A-VELAIF820".

Manual Information To the End User

The OEM integrator has to be aware not to provide information to the end user regarding how to install or remove this RF module in the user’s manual of the end product which integrates this module.
The end user manual shall include all required regulatory information/warning as show in this manual.

Manuel d'information à l'utilisateur final

L'intégrateur OEM doit être conscient de ne pas fournir des informations à l'utilisateur final quant à la façon d'installer ou de supprimer ce module RF dans le manuel de l'utilisateur du produit final qui intègre ce module.
Le manuel de l'utilisateur final doit inclure toutes les informations réglementaires requises et avertissements comme indiqué dans ce manuel.

© Copyright 2022 Laird Connectivity
All Rights Reserved
https://www.lairdconnect.com/
Americas: +1-800-492-2320
Europe: +44-1628-858-940
Hong Kong: +852 2762 4823