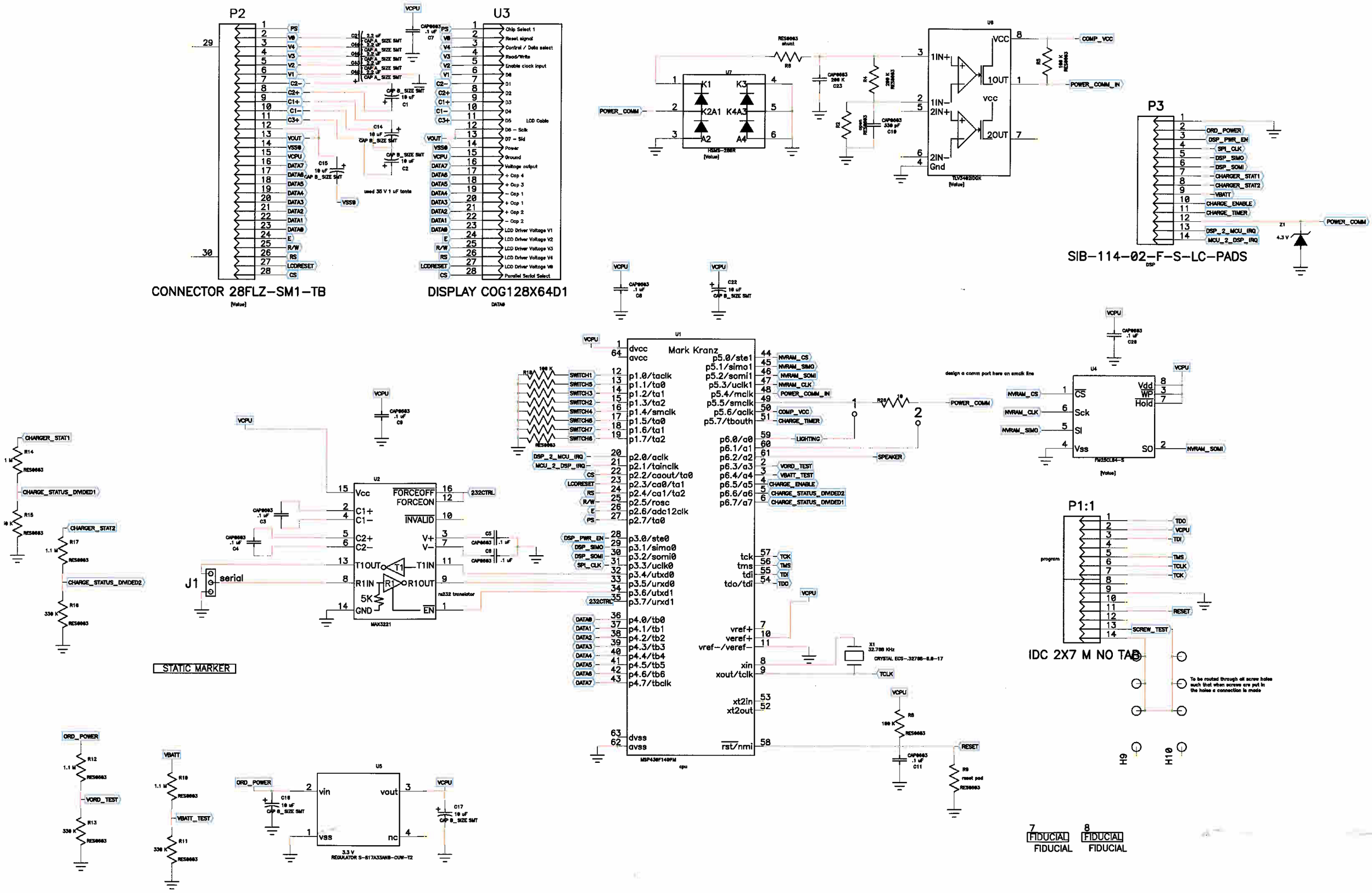
P2
CONNECTOR 28FLZ-SM1-TB
U3
DISPLAY COG128X64D1
U7
HSMS-286R
U6
TLV3402IDDK
P3
SIB-114-02-F-S-LC-PADS
U1
Mark Kranz
MSP430F149PM
U2
MAX3221
U4
FM25CL64-S
U5
3.3 V
REGULATOR S-817A33ANB-OUW-T2
P1:1
IDC 2X7 M NO TAB
STATIC MARKER
FIDUCIAL
FIDUCIAL
FIDUCIAL
FIDUCIAL

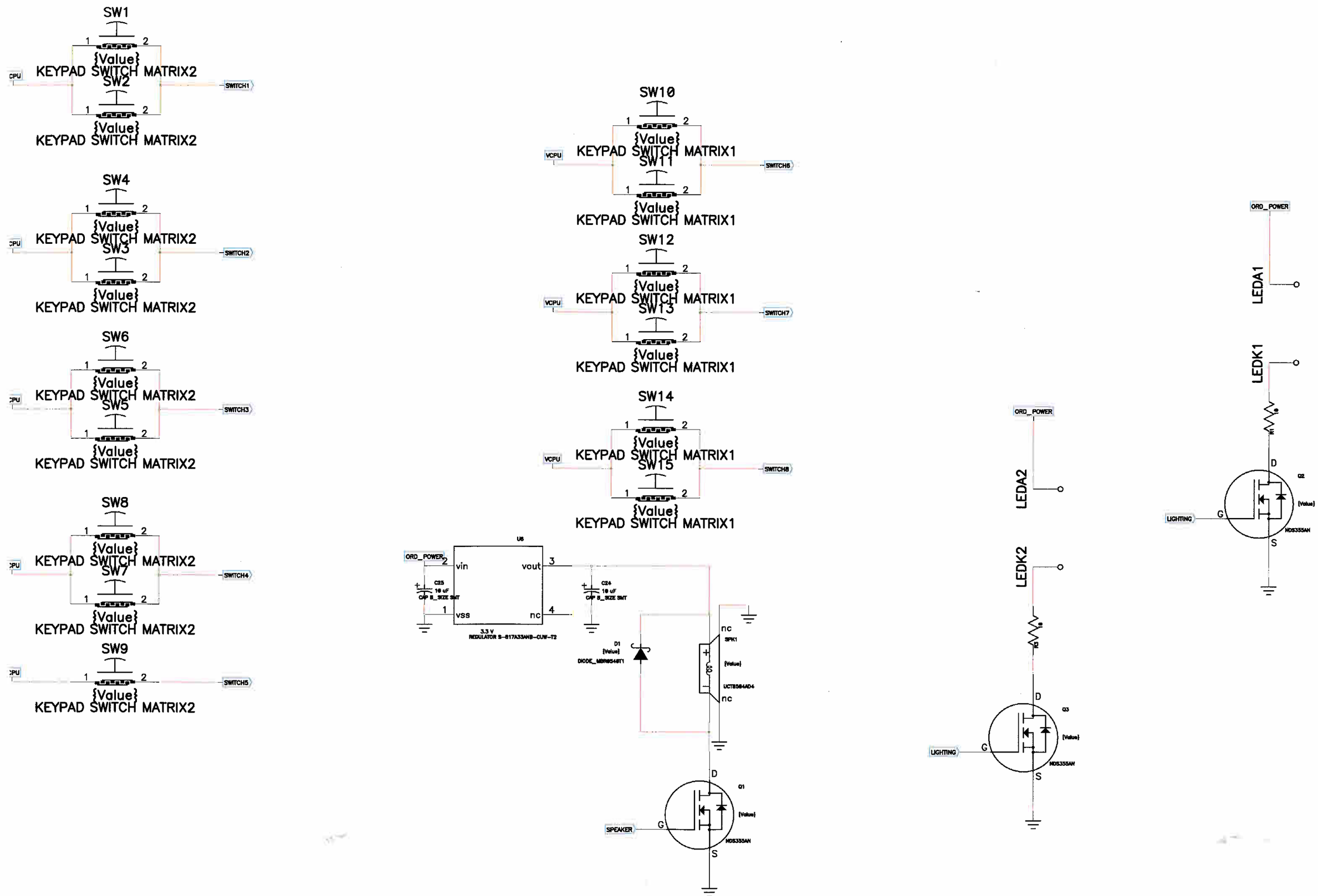
SW1
KEYPAD SWITCH MATRIX2
SW2
KEYPAD SWITCH MATRIX2
SW4
KEYPAD SWITCH MATRIX2
SW3
KEYPAD SWITCH MATRIX2
SW6
KEYPAD SWITCH MATRIX2
SW5
KEYPAD SWITCH MATRIX2
SW8
KEYPAD SWITCH MATRIX2
SW7
KEYPAD SWITCH MATRIX2
SW9
KEYPAD SWITCH MATRIX2
SW10
KEYPAD SWITCH MATRIX1
SW11
KEYPAD SWITCH MATRIX1
SW12
KEYPAD SWITCH MATRIX1
SW13
KEYPAD SWITCH MATRIX1
SW14
KEYPAD SWITCH MATRIX1
SW15
KEYPAD SWITCH MATRIX1
U6
vin
vout
vss
nc
3.3 V
REGULATOR S-817A33ANB-CUW-T2
C25
C24
D1
SPK1
Q1
Q2
Q3
NDS355AN
SPEAKER
LIGHTING
ORD_POWER
LEDA1
LEDK1
LEDA2
LEDK2