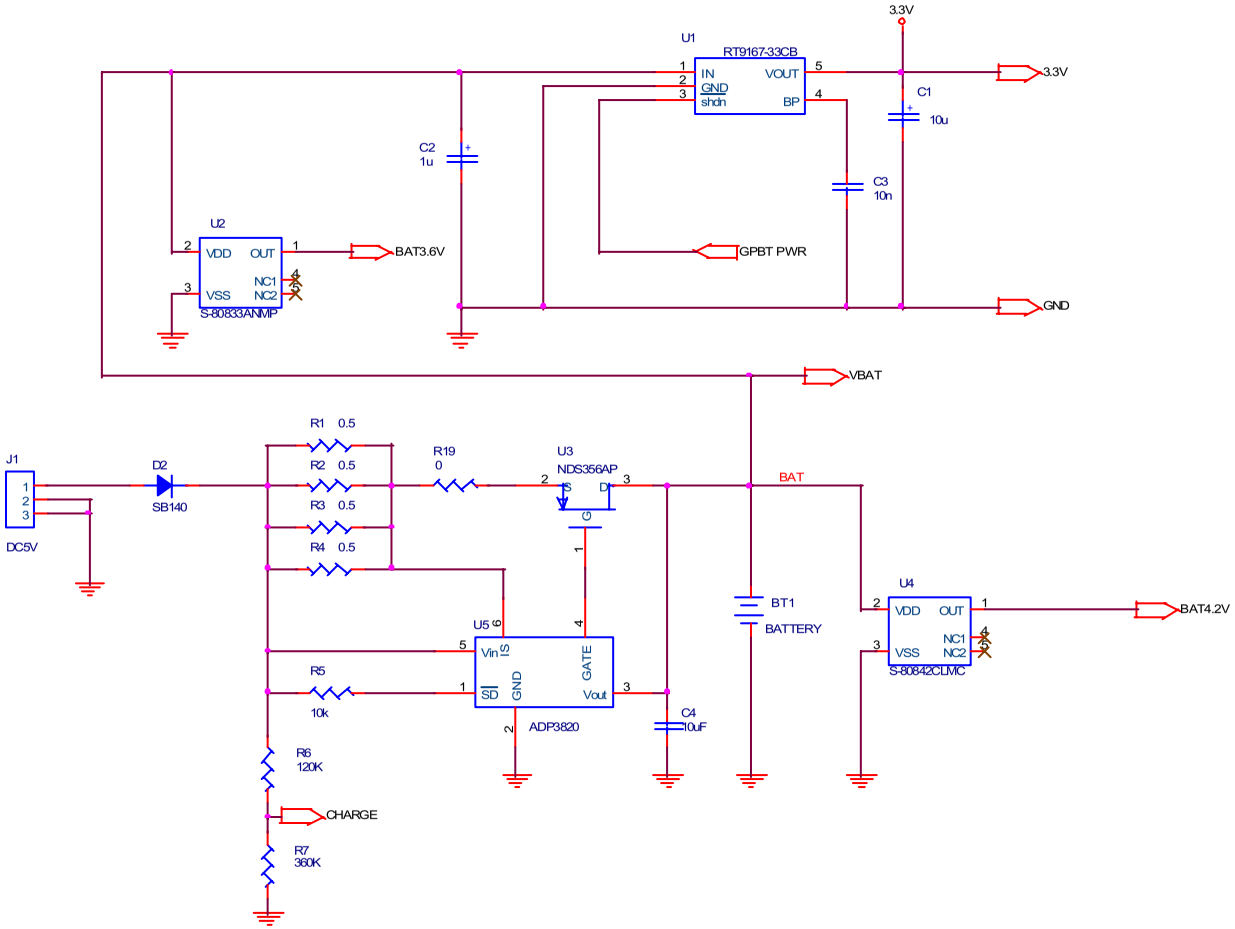

Title	<Title>	
Size B	Document Number <Doc>	Rev 1.0
Date: Thursday, June 10, 2004	Sheet 1 of 4	

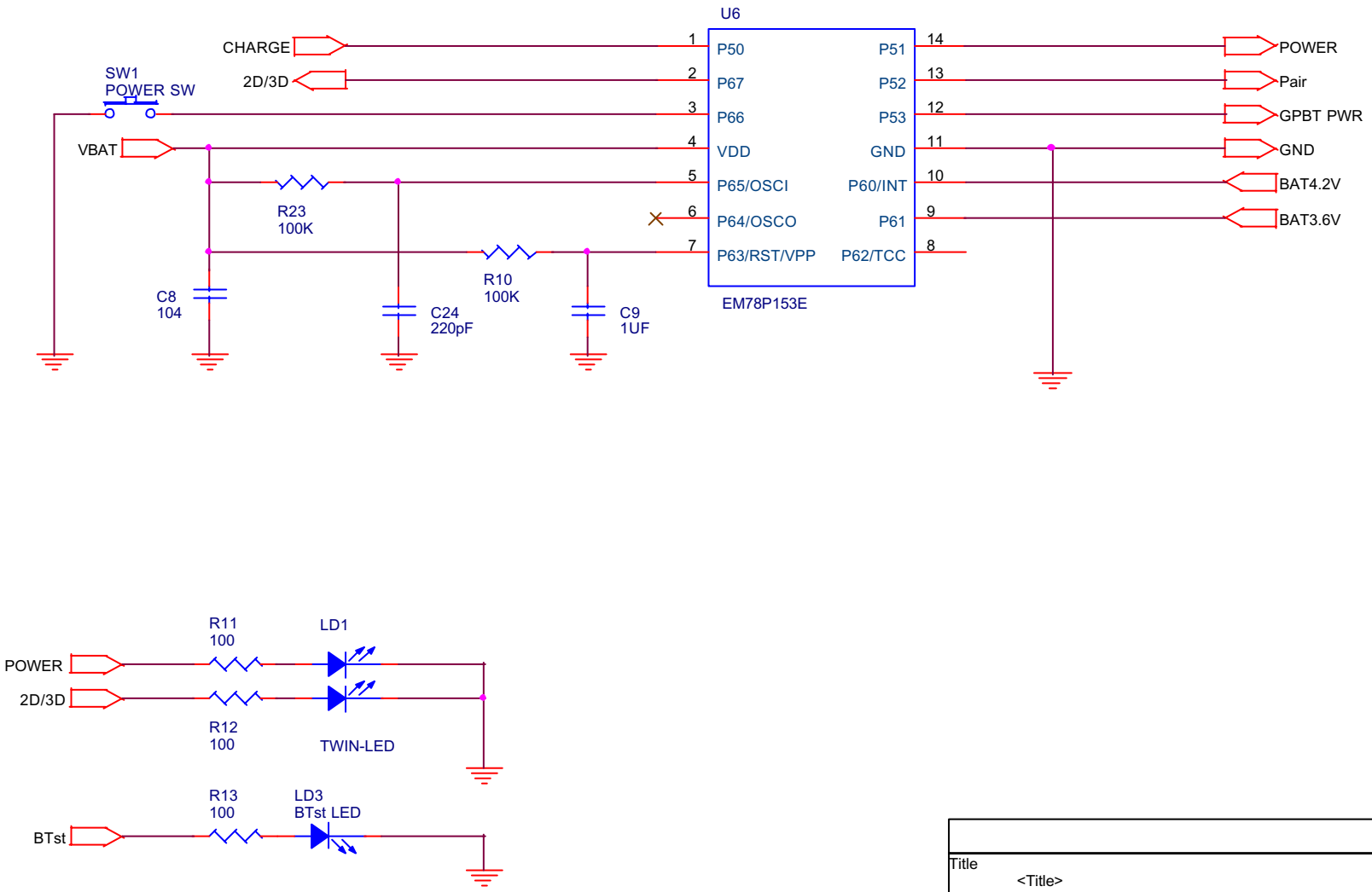

Title <Title>		
Size A	Document Number <Doc>	Rev <RevCode>
Date: Thursday, June 10, 2004	Sheet 3 of 4	

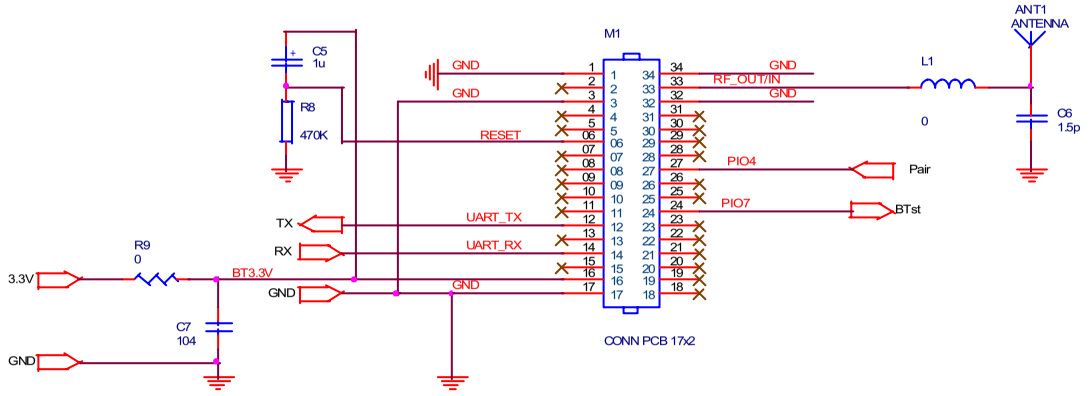

Title	<Title>	
Size B	Document Number BLUETOOTH RF MODULE	Rev 1.0
Date: Thursday, June 10, 2004	Sheet 2 of 4	

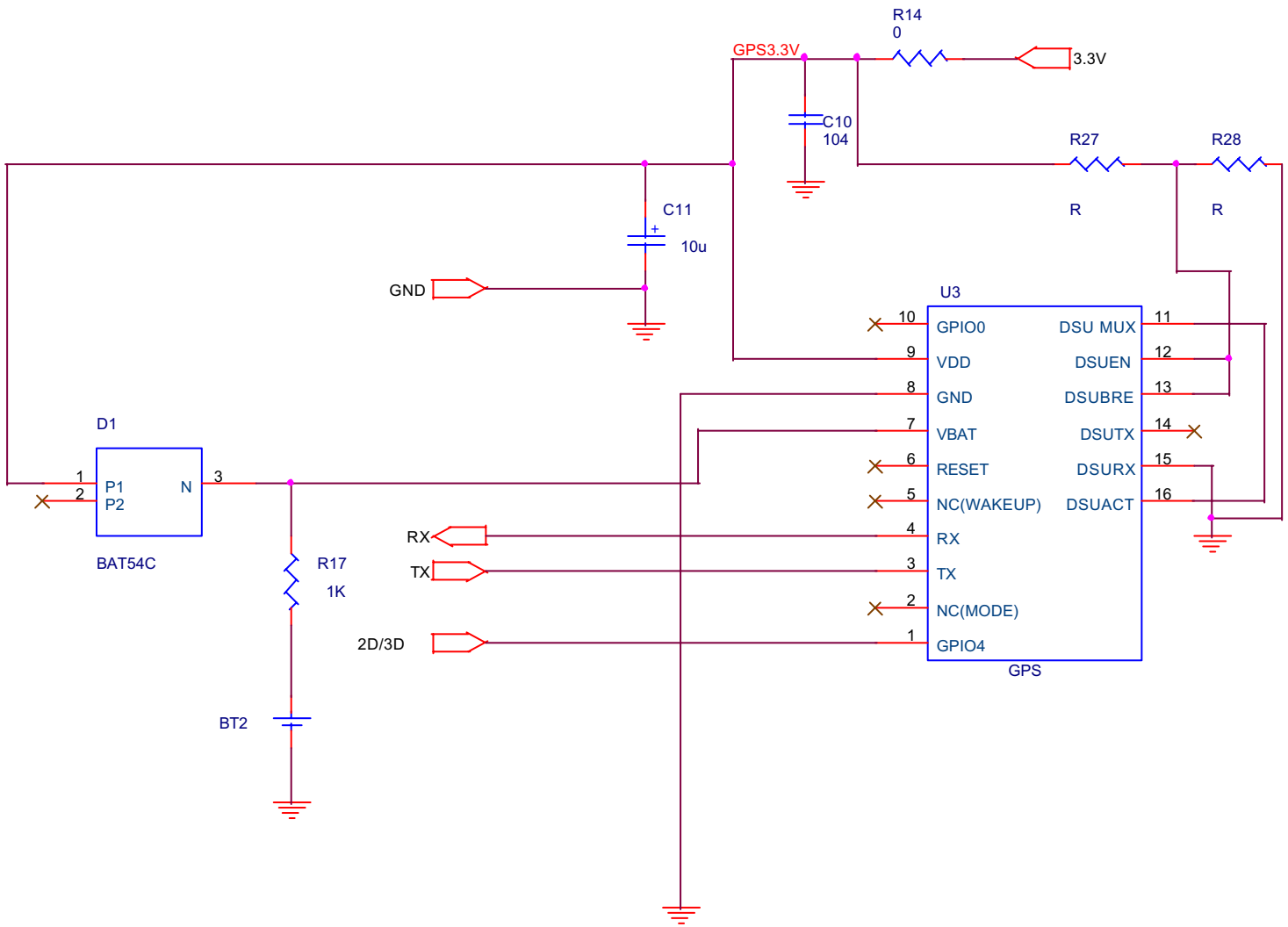

Title <Title>		
Size A	Document Number <Doc>	Rev 1.0
Date: Thursday, June 10, 2004	Sheet 4 of 4	