ZTE Blade A210

(BGH Joy A20)

User Manual

Appearance

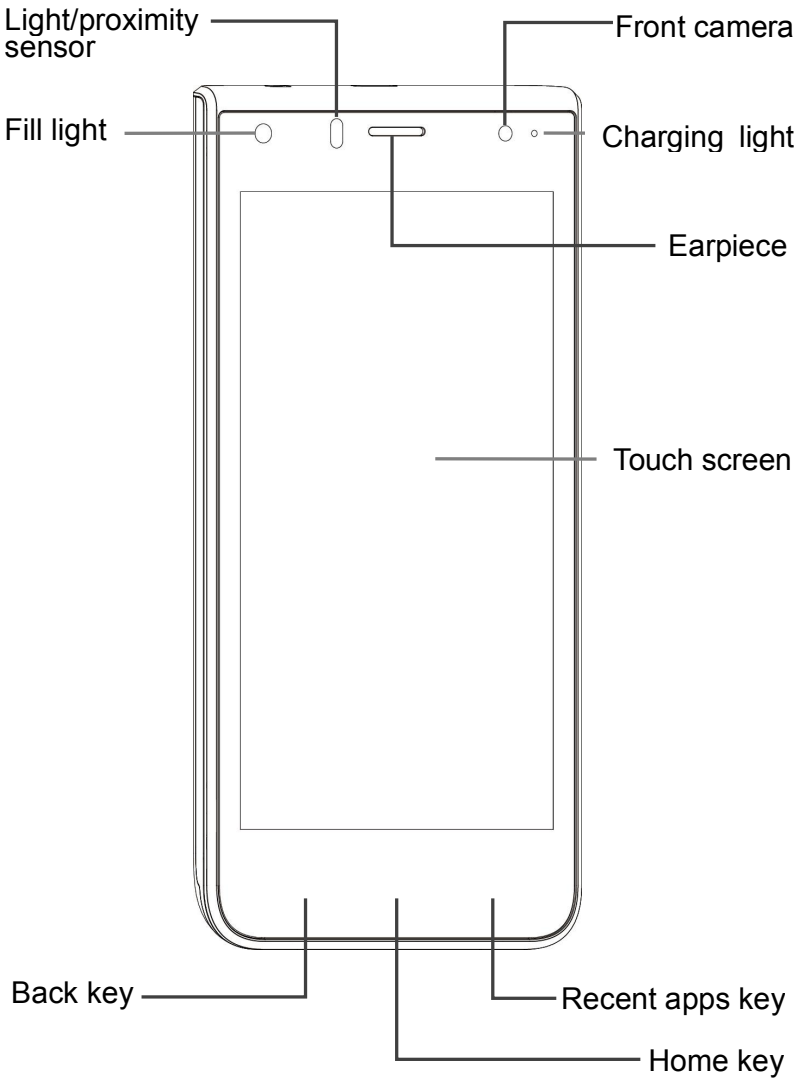
Light/proximity sensor
Front camera
Fill light
Charging light
Earpiece
Touch screen
Back key
Recent apps key
Home key

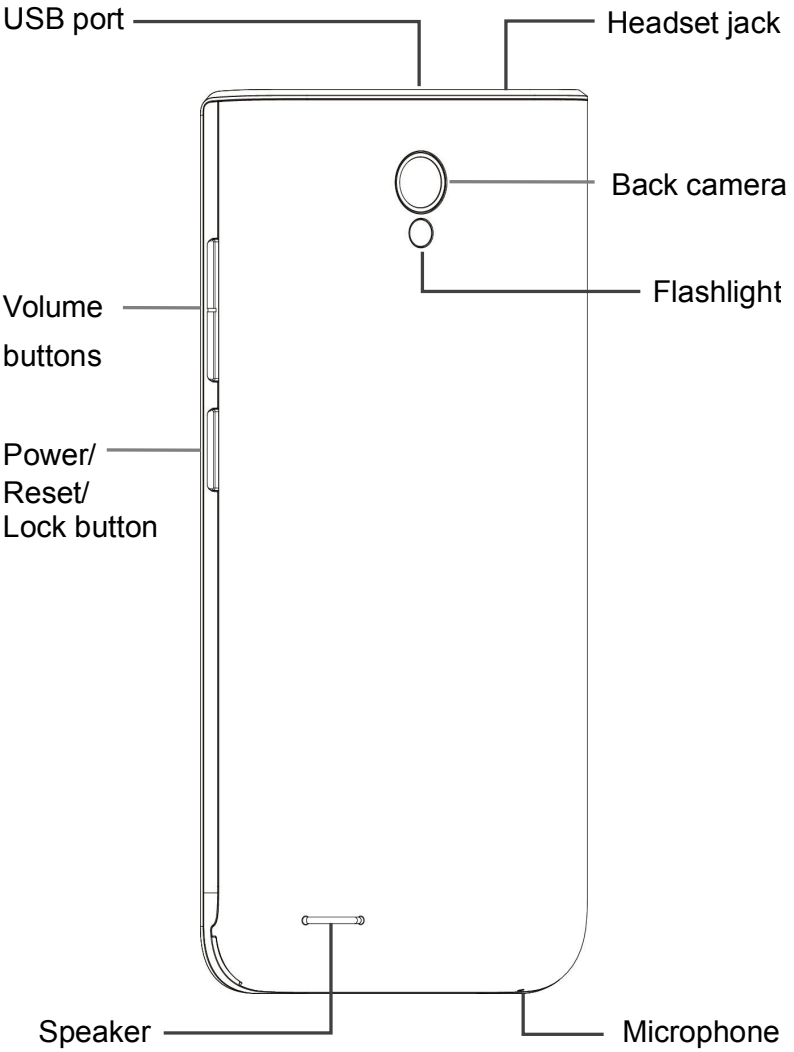
USB port
Headset jack
Back camera
Flashlight
Volume
buttons
Power/
Reset/
Lock button
Speaker
Microphone

Inserting a micro-SIM card

1. Remove the back cover.

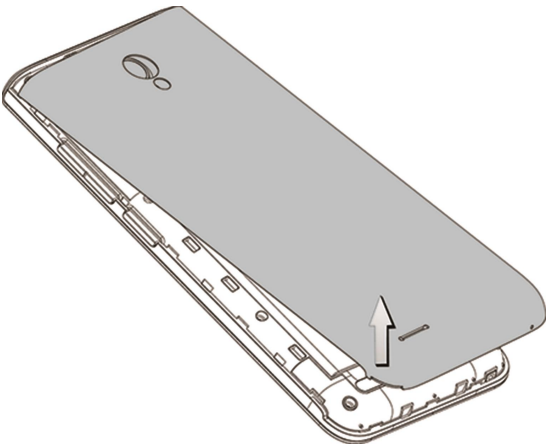

2. Remove the battery.

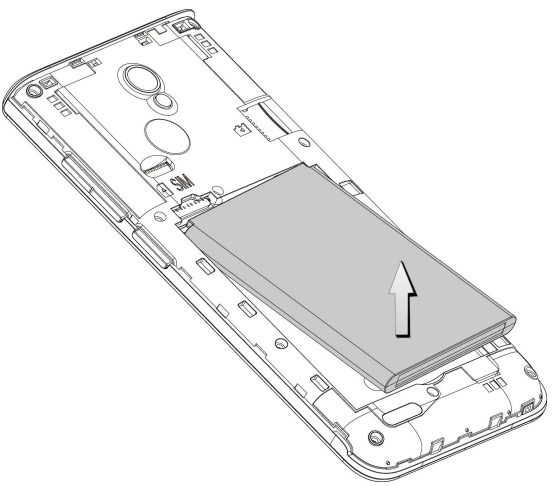

3. Insert a micro-SIM card into the SIM card slot.

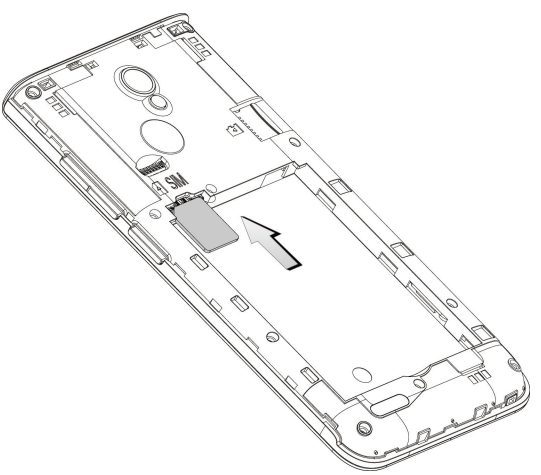

Note

- Your phone supports a micro-SIM card ONLY.
- Dimensions of a micro-SIM card: 12mm*15mm.

Inserting an SD card

1. Remove the back cover. Refer to step1 in the section “Inserting a SIM card”.
2. Place your SD card on the card slot. Push the card along the arrow direction until it stucks tightly in the slot.

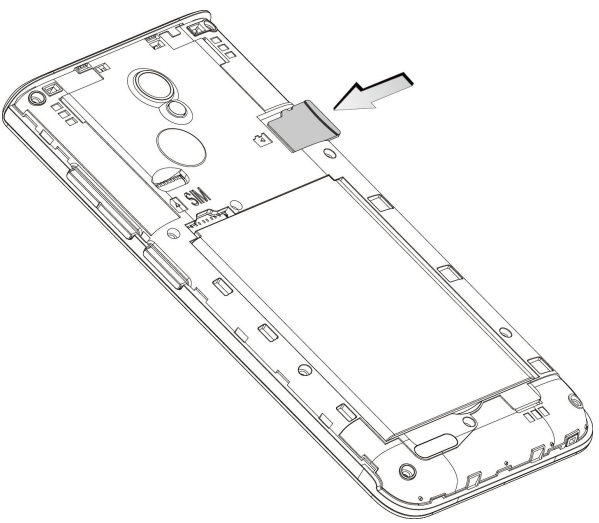

Charging the battery

Connect the phone to the power outlet using the included USB cable and power adapter.

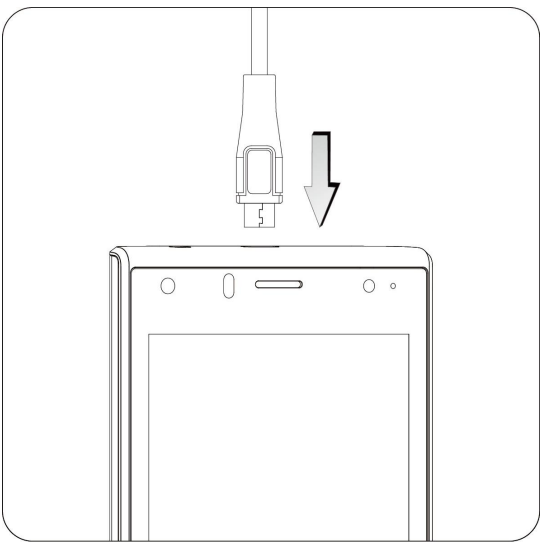

Note

- Your phone and power adapter might heat up while charging.
- Use other USB cable or power adapter might decrease the life span of your phone or cause fire, explosion and other hazards.

Declaration of RoHS compliance

We're determined to reduce the impact we have on the environment and take responsibility for the earth we live on. So this document allows us to formally declare that the ZTE Blade A210 (BGH Joy A20), manufactured by ZTE Corporation fully complies with the European Parliament's RoHS (Restriction of Hazardous Substances) Directive 2002/95/EC, with respect to all the following substances:

(1) Lead (Pb)

(2) Mercury (Hg)

(3) Cadmium (Cd)

(4) Hexavalent Chromium (Cr (VI))

(5) Polybrominated biphenyl (PBB)

(6) Polybrominated diphenyl ether (PBDE)

Our compliance is witnessed by written declaration from our suppliers. This confirms that any potential trace contamination levels of the substances listed above are below the maximum level set by EU 2002/95/EC, or are exempt due to their application.

The ZTE Blade A210 (BGH Joy A20) manufactured by ZTE Corporation meets all the requirements of EU 2002/95/EC.

Disposal of your old phone

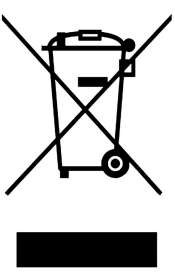

1. When the wheelie bin symbol is attached to a product, it means the product is covered by the European Directive 2002/96/CE.

2. All electrical and electronic products should be disposed of separately from normal household waste via designated collection points provided by government or local authorities.

3. The correct disposal of electrical and electronic products will help protect the environment and human health.

Health and safety

▸ FCC Regulations:

This mobile phone complies with part 15 of the FCC Rules. Operation is subject to the following two conditions: (1) This device may not cause harmful interference, and (2) this device must accept any interference received, including interference that may cause undesired operation.

This mobile phone has been tested and found to comply with the limits for a Class B digital device, pursuant to Part 15 of the FCC Rules. These limits are designed to provide reasonable protection against harmful interference in a residential installation. This equipment generates, uses and can radiated radio frequency energy and, if not installed and used in accordance with the instructions, may cause harmful interference to radio communications. However, there is no guarantee that interference will not occur in a particular installation If this equipment does cause harmful interference to radio or television reception, which can be determined by turning the equipment off and on, the user is encouraged to try to correct the interference by one or more of the following measures:

-Reorient or relocate the receiving antenna.

-Increase the separation between the equipment and receiver.

-Connect the equipment into an outlet on a circuit different from that to which the receiver is connected.

-Consult the dealer or an experienced radio/TV technician for help.

FCC Note:

Caution: Changes or modifications not expressly approved by the party responsible for compliance could void the user‘s authority to operate the equipment.

- RF exposure information (SAR)

This phone is designed and manufactured not to exceed the emission limits for exposure to radio frequency (RF) energy set by the Federal Communications Commission of the United States.

During SAR testing, this device was set to transmit at its highest certified power level in all tested frequency bands, and placed in positions that simulate RF exposure in usage against the head with no separation, and near the body with the separation of 10 mm. Although the SAR is determined at the highest certified power level, the actual SAR level of the device while operating can be well below the maximum value. This is because the phone is designed to operate at multiple power levels so as to use only the power required to reach the network. In general, the closer you are to a wireless base station antenna, the lower the power output.

The exposure standard for wireless devices employing a unit of measurement is known as the Specific Absorption Rate, or SAR.

The SAR limit set by the FCC is 1.6W/kg.

This device is complied with SAR for general population /uncontrolled exposure limits in

ANSI/IEEE C95.1-1992 and had been tested in accordance with the measurement methods and procedures specified in IEEE1528. This device has been tested and meets the FCC RF exposure guidelines when tested with the device directly contacted to the body.

The FCC has granted an Equipment Authorization for this model phone with all reported SAR levels evaluated as in compliance with the FCC RF exposure guidelines. SAR information on this model phone is on file with the FCC and can be found under the Display Grant section of www.fcc.gov/oet/ea/fccid after searching on FCC ID: SRQ-A210.

For this device, the highest reported SAR value for usage against the head is 0.442 W/kg, for usage near the body is 1.089 W/kg, hotspot is 1.098W/kg

While there may be differences between the SAR levels of various phones and at various positions, they all meet the government requirements.

SAR compliance for body-worn operation is based on a separation distance of 10 mm between the unit and the human body. Carry this device at least 10 mm away from your body to ensure RF exposure level compliant or lower to the reported level. To support body-worn operation, choose the belt clips or holsters, which do not contain metallic components, to maintain a separation of 10 mm between this device and your body.

RF exposure compliance with any body-worn accessory, which contains metal, was not tested and certified, and use such body-worn accessory should be avoided.

Note

This device does not support V.O.I.P. function. It means that the functions of WLAN and Bluetooth do not have voice capability in the held to ear mode for phone service

Legal notice

Copyright Statement

Copyright © 2016 by ZTE Corporation

All the copyrights of this document herein belong to ZTE Corporation. Without the written permission of copyright owner, no part of this publication may be excerpted, reproduced, translated by any person or entity in any form or by any means.

This document is subject to change without prior notice.

ZTE Corporation keeps the right to make the final explanation to this document.

Trademarks

Android is a trademark of Google, Inc.

All other trademarks remain the property of their respective owners.

Statement of Third-party Applications

During the installation process of some third-party applications, the issues of repeated restart or abnormal use of software might be caused by incompatibility of the third-party applications, rather than the phone itself.