FCC SAR Test Report

APPLICANT	:	ZTE CORPORATION
EQUIPMENT	:	LTE uFi
BRAND NAME	:	ZTE
MODEL NAME	:	MF923
FCC ID	:	SRQ-MF923
STANDARD	:	FCC 47 CFR Part 2 (2.1093) ANSI/IEEE C95.1-1992 IEEE 1528-2003

We, SPORTON INTERNATIONAL (XI'AN) INC., would like to declare that the tested sample has been evaluated in accordance with the procedures and had been in compliance with the applicable technical standards.

The test results in this report apply exclusively to the tested model / sample. Without written approval of SPORTON INTERNATIONAL (XI'AN) INC., the test report shall not be reproduced except in full.

Reviewed by: Eric Huang / Deputy Manager

Approved by: Jones Tsai / Manager

Testing Laboratory
2627

SPORTON INTERNATIONAL (XI'AN) INC.
1F, Building A3, No. 39 Chuangye Rd., Xi'an Hi-tech Zone, Shanxi Province, P.R.C.

Table of Contents

1. Statement of Compliance **4**
2. Administration Data **5**
3. Guidance Standard **5**
4. Equipment Under Test (EUT) **6**
4.1 General Information 6
4.2 Maximum Tune-up Limit 7
4.3 General LTE SAR Test and Reporting Considerations 11
5. RF Exposure Limits **13**
5.1 Uncontrolled Environment 13
5.2 Controlled Environment 13
6. Specific Absorption Rate (SAR) **14**
6.1 Introduction 14
6.2 SAR Definition 14
7. System Description and Setup **15**
8. Measurement Procedures **16**
8.1 Spatial Peak SAR Evaluation 16
8.2 Power Reference Measurement 17
8.3 Area Scan 17
8.4 Zoom Scan 18
8.5 Volume Scan Procedures 18
8.6 Power Drift Monitoring 18
9. Test Equipment List **19**
10. System Verification **20**
10.1 Tissue Verification 20
10.2 System Performance Check Results 21
11. RF Exposure Positions **22**
12. Conducted RF Output Power (Unit: dBm) **23**
13. WLAN Exclusions Applied **50**
14. Antenna Location **51**
15. SAR Test Results **52**
15.1 Body SAR 53
15.2 Repeated SAR Measurement 57
16. Simultaneous Transmission Analysis **58**
16.1 Body Exposure Conditions 59
17. Uncertainty Assessment **71**
18. References **74**
Appendix A. Plots of System Performance Check
Appendix B. Plots of High SAR Measurement
Appendix C. DASY Calibration Certificate
Appendix D. Test Setup Photos

Revision History

REPORT NO.	VERSION	DESCRIPTION	ISSUED DATE
FA460508	Rev. 01	Initial issue of report	Aug. 25, 2014
FA460508	Rev. 02	Added the conducted power measurement for LTE Carrier Aggregation	Sep. 15, 2014

1. Statement of Compliance

The maximum results of Specific Absorption Rate (SAR) found during testing for **ZTE CORPORATION, LTE uFi, MF923** are as follows.

Equipment Class	Frequency Band	Operating Mode	Highest SAR Summary	
			Body 1g SAR (W/kg) Gap(1cm)	Simultaneous Transmission SAR (W/kg)
PCB	WCDMA Band V	Data	0.68	1.52
	WCDMA Band II	Data	0.94	
	LTE Band 17	Data	0.36	
	LTE Band 5	Data	0.71	
	LTE Band 4	Data	0.94	
	LTE Band 2	Data	0.97	
DTS	WLAN 2.4GHz Band	Data	0.10	1.03
NII	WLAN 5.2GHz Band	Data	1.08	1.52
	WLAN 5.8GHz Band	Data	0.68	
Date of Testing:			Jul. 23, 2014 ~ Aug. 18, 2014	

This device is in compliance with Specific Absorption Rate (SAR) for general population/uncontrolled exposure limits (1.6 W/kg) specified in FCC 47 CFR part 2 (2.1093) and ANSI/IEEE C95.1-1992, and had been tested in accordance with the measurement methods and procedures specified in IEEE 1528-2003.

2. Administration Data

Testing Laboratory	
Test Site	SPORTON INTERNATIONAL (XI'AN) INC.
Test Site Location	1F, Building A3, No. 39 Chuangye Rd., Xi'an Hi-tech Zone, Shanxi Province, P. R. C. TEL: +86-029-8860-8767 FAX: +86-029-8860-8791

Applicant	
Company Name	ZTE CORPORATION
Address	ZTE Plaza, Keji Road South, Hi-Tech, Industrial Park, Nanshan District, Shenzhen, Guangdong, 518057, P. R. China

Manufacturer	
Company Name	ZTE CORPORATION
Address	ZTE Plaza, Keji Road South, Hi-Tech, Industrial Park, Nanshan District, Shenzhen, Guangdong, 518057, P. R. China

3. Guidance Standard

The Specific Absorption Rate (SAR) testing specification, method, and procedure for this device is in accordance with the following standards:

- FCC 47 CFR Part 2 (2.1093)
- ANSI/IEEE C95.1-1992
- IEEE 1528-2003
- FCC KDB 865664 D01 SAR Measurement 100 MHz to 6 GHz v01r03
- FCC KDB 865664 D02 SAR Reporting v01r01
- FCC KDB 447498 D01 General RF Exposure Guidance v05r02
- FCC KDB 248227 D01 SAR meas for 802 11abg v01r02
- FCC KDB 941225 D01 SAR test for 3G devices v02
- FCC KDB 941225 D02 HSPA and 1x Advanced v02r02
- FCC KDB 941225 D05 SAR for LTE Devices v02r03
- FCC KDB 941225 D05A Rel.10 LTE SAR Test Guidance v01r01
- FCC KDB 941225 D06 Hotspot Mode SAR v01r01

4. Equipment Under Test (EUT)

4.1 General Information

Product Feature & Specification	
Equipment Name	LTE uFi
Brand Name	ZTE
Model Name	MF923
FCC ID	SRQ-MF923
IMEI Code	865135023334253
Wireless Technology and Frequency Range	WCDMA Band V: 826.4 MHz ~ 846.6 MHz WCDMA Band II: 1852.4 MHz ~ 1907.6 MHz LTE Band 17: 706.5 MHz ~ 713.5 MHz LTE Band 5: 824.7 MHz ~ 848.3 MHz LTE Band 4: 1710.7 MHz ~ 1754.3 MHz LTE Band 2: 1850.7 MHz ~ 1909.3 MHz WLAN 2.4GHz Band: 2412 MHz ~ 2462 MHz WLAN 5.2GHz Band: 5180 MHz ~ 5240 MHz WLAN 5.8GHz Band: 5745 MHz ~ 5825 MHz
Mode	•RMC 12.2Kbps •HSDPA •HSUPA •DC-HSDPA •HSPA+ (Downlink Only) •LTE: QPSK, 16QAM •LTE Carrier Aggregation (Downlink only) •802.11a/b/g/n HT20/HT40
HW Version	xx4A
SW Version	MF923V0.6
EUT Stage	Identical Prototype

Remark:

1. The above EUT's information was declared by manufacturer. Please refer to the specifications or user's manual for more detailed description.
2. This device 2.4GHz WLAN supports hotspot operation, and 5.8GHz WLAN supports WiFi Direct (GC/GO), and 5.2GHz supports WiFi Direct (GC only).
3. This device has no voice function.
4. This device supports inter-band LTE carrier aggregation (CA) in the downlink only. Uplink maximum output power measurement with downlink carrier aggregation active was measured to confirm that uplink maximum output power with downlink carrier aggregation active remains within the specified tune-up tolerance limits and not more than 1⁄4 dB higher than the maximum output measured without downlink carrier aggregation active.

4.2 Maximum Tune-up Limit

Mode	Average power(dBm)	
	WCDMA Band V	WCDMA Band II
RMC 12.2Kbps	24.0	23.5
HSDPA Subtest-1	22.0	22.0
HSDPA Subtest-2	22.0	22.0
HSDPA Subtest-3	22.0	22.0
HSDPA Subtest-4	22.0	22.0
DC-HSDPA Subtest-1	22.0	22.0
DC-HSDPA Subtest-2	22.0	22.0
DC-HSDPA Subtest-3	22.0	22.0
DC-HSDPA Subtest-4	22.0	22.0
HSUPA Subtest-1	22.0	21.5
HSUPA Subtest-2	21.0	21.0
HSUPA Subtest-3	20.5	21.0
HSUPA Subtest-4	22.0	21.5
HSUPA Subtest-5	21.0	21.0

LTE Band 17				
Average Power (dBm)				
Modulation	BW (MHz)	RB size	MPR	Target Power
QPSK	10	≤ 12	0	23.5
QPSK	10	> 12	1	22.5
16QAM	10	≤ 12	1	22.5
16QAM	10	> 12	2	21.5
QPSK	5	≤ 8	0	23.5
QPSK	5	> 8	1	22.5
16QAM	5	≤ 8	1	22.5
16QAM	5	> 8	2	21.5

LTE Band 4				
Average Power (dBm)				
Modulation	BW (MHz)	RB size	MPR	Target Power
QPSK	20	≤ 18	0	23.5
QPSK	20	> 18	1	22.5
16QAM	20	≤ 18	1	22.5
16QAM	20	> 18	2	21.5
QPSK	15	≤ 16	0	23.5
QPSK	15	> 16	1	22.5
16QAM	15	≤ 16	1	22.5
16QAM	15	> 16	2	21.5
QPSK	10	≤ 12	0	23.5
QPSK	10	> 12	1	22.5
16QAM	10	≤ 12	1	22.5
16QAM	10	> 12	2	21.5
QPSK	5	≤ 8	0	23.5
QPSK	5	> 8	1	22.5
16QAM	5	≤ 8	1	22.5
16QAM	5	> 8	2	21.5
QPSK	3	≤ 4	0	23.5
QPSK	3	> 4	1	22.5
16QAM	3	≤ 4	1	22.5
16QAM	3	> 4	2	21.5
QPSK	1.4	≤ 5	0	23.5
QPSK	1.4	> 5	1	22.5
16QAM	1.4	≤ 5	1	22.5
16QAM	1.4	> 5	2	21.5

LTE Band 5				
Average Power (dBm)				
Modulation	BW (MHz)	RB size	MPR	Target Power
QPSK	10	≤ 12	0	24.0
QPSK	10	> 12	1	23.0
16QAM	10	≤ 12	1	23.0
16QAM	10	> 12	2	22.0
QPSK	5	≤ 8	0	24.0
QPSK	5	> 8	1	23.0
16QAM	5	≤ 8	1	23.0
16QAM	5	> 8	2	22.0
QPSK	3	≤ 4	0	24.0
QPSK	3	> 4	1	23.0
16QAM	3	≤ 4	1	23.0
16QAM	3	> 4	2	22.0
QPSK	1.4	≤ 5	0	24.0
QPSK	1.4	> 5	1	23.0
16QAM	1.4	≤ 5	1	23.0
16QAM	1.4	> 5	2	22.0

LTE Band 2				
Average Power (dBm)				
Modulation	BW (MHz)	RB size	MPR	Target Power
QPSK	20	≤ 18	0	23.5
QPSK	20	> 18	1	22.5
16QAM	20	≤ 18	1	22.5
16QAM	20	> 18	2	21.5
QPSK	15	≤ 16	0	23.5
QPSK	15	> 16	1	22.5
16QAM	15	≤ 16	1	22.5
16QAM	15	> 16	2	21.5
QPSK	10	≤ 12	0	23.5
QPSK	10	> 12	1	22.5
16QAM	10	≤ 12	1	22.5
16QAM	10	> 12	2	21.5
QPSK	5	≤ 8	0	23.5
QPSK	5	> 8	1	22.5
16QAM	5	≤ 8	1	22.5
16QAM	5	> 8	2	21.5
QPSK	3	≤ 4	0	23.5
QPSK	3	> 4	1	22.5
16QAM	3	≤ 4	1	22.5
16QAM	3	> 4	2	21.5
QPSK	1.4	≤ 5	0	23.5
QPSK	1.4	> 5	1	22.5
16QAM	1.4	≤ 5	1	22.5
16QAM	1.4	> 5	2	21.5

Mode				Maximum Average Power (dBm)
2.4GHz	802.11b	Chain Port 0		14.5
		Chain Port 1		15.0
	802.11g	Chain Port 0	CH 01	11.0
			CH 06	13.0
			CH 11	11.0
		Chain Port 1	CH 01	11.0
			CH 06	14.0
			CH 11	12.0
	802.11n HT20	Chain Port 0		12.5
		Chain Port 1	CH 01	12.0
			CH 06	12.0
			CH 11	12.5
		Chain Port 0+1(0)		9.5
		Chain Port 0+1(1)		10.0
		Chain Port 0+1		13.0
	802.11n HT40	Chain Port 0		12.5
		Chain Port 1		12.0
		Chain Port 0+1(0)		9.5
		Chain Port 0+1(1)		10.0
		Chain Port 0+1		12.5
5.2GHz	802.11a	Chain Port 0		11.0
		Chain Port 1		11.0
	802.11n HT20	Chain Port 0		10.5
		Chain Port 1		11.0
		Chain Port 0+1(0)		11.0
		Chain Port 0+1(1)		11.5
		Chain Port 0+1		14.0
	802.11n HT40	Chain Port 0		10.5
		Chain Port 1		11.0
		Chain Port 0+1(0)		11.5
		Chain Port 0+1(1)		11.5
		Chain Port 0+1		14.5
5.8GHz	802.11a	Chain Port 0		10.0
		Chain Port 1		12.0
	802.11n HT20	Chain Port 0		10.0
		Chain Port 1		11.0
		Chain Port 0+1(0)		11.0
		Chain Port 0+1(1)		11.0
		Chain Port 0+1		14.0
	802.11n HT40	Chain Port 0		10.0
		Chain Port 1		12.0
		Chain Port 0+1(0)		8.5
		Chain Port 0+1(1)		9.0
		Chain Port 0+1		12.0

4.3 General LTE SAR Test and Reporting Considerations

Summarized necessary items addressed in KDB 941225 D05 v02r03			
FCC ID	SRQ-MF923		
Equipment Name	LTE uFi		
Operating Frequency Range of each LTE transmission band	LTE Band 17: 706.5 MHz ~ 713.5 MHz LTE Band 5: 824.7 MHz ~ 848.3 MHz LTE Band 4: 1710.7 MHz ~ 1754.3 MHz LTE Band 2: 1850.7 MHz ~ 1909.3 MHz		
Channel Bandwidth	1.4MHz, 3MHz, 5MHz, 10MHz, 15MHz, 20MHz(LTE Band 2/4) 1.4MHz, 3MHz, 5MHz, 10MHz(LTE Band 5) 3MHz, 5MHz, 10MHz, (LTE Band 17)		
uplink modulations used	QPSK, and 16QAM		
LTE Voice / Data requirements	Data only		
LTE MPR permanently built-in by design	Table 6.2.3-1: Maximum Power Reduction (MPR) for Power Class 3		

Modulation	Channel bandwidth / Transmission bandwidth (RB)						MPR (dB)
	1.4 MHz	3.0 MHz	5 MHz	10 MHz	15 MHz	20 MHz	
QPSK	> 5	> 4	> 8	> 12	> 16	> 18	≤ 1
16 QAM	≤ 5	≤ 4	≤ 8	≤ 12	≤ 16	≤ 18	≤ 1
16 QAM	> 5	> 4	> 8	> 12	> 16	> 18	≤ 2

LTE A-MPR	In the base station simulator configuration, Network Setting value is set to NS_01 to disable A-MPR during SAR testing and the LTE SAR tests was transmitting on all TTI frames (Maximum TTI)		
Spectrum plots for RB configuration	A properly configured base station simulator was used for the SAR and power measurement; therefore, spectrum plots for each RB allocation and offset configuration are not included in the SAR report.		
LTE Carrier Aggregation Combinations	Intra Band	Not support	
	Inter Band	B2(PCC)+B17(SCC)	5MHz(B2)+5MHz(B17)
			5MHz(B2)+10MHz(B17)
			10MHz(B2)+5MHz(B17)
			10MHz(B2)+10MHz(B17)
		B2(PCC)+B29(SCC)	5MHz(B2)+5MHz(B29)
			5MHz(B2)+10MHz(B29)
			10MHz(B2)+5MHz(B29)
			10MHz(B2)+10MHz(B29)
		B4(PCC)+B17(SCC)	5MHz(B4)+5MHz(B17)
			5MHz(B4)+10MHz(B17)
			10MHz(B4)+5MHz(B17)
			10MHz(B4)+10MHz(B17)
		B4(PCC)+B29(SCC)	5MHz(B4)+5MHz(B29)
			5MHz(B4)+10MHz(B29)
			10MHz(B4)+5MHz(B29)
			10MHz(B4)+10MHz(B29)
		B17(PCC)+B2(SCC)	5MHz(B17)+5MHz(B2)
			5MHz(B17)+10MHz(B2)
			10MHz(B17)+5MHz(B2)
			10MHz(B17)+10MHz(B2)

LTE Band 17				
	Bandwidth 5 MHz		Bandwidth 10 MHz	
	Channel #	Freq.(MHz)	Channel #	Freq. (MHz)
L	23755	706.5	23780	709
M	23790	710	23790	710
H	23825	713.5	23800	711

LTE Band 5								
	Bandwidth 1.4 MHz		Bandwidth 3 MHz		Bandwidth 5 MHz		Bandwidth 10 MHz	
	Ch. #	Freq. (MHz)	Ch. #	Freq. (MHz)	Ch. #	Freq. (MHz)	Ch. #	Freq. (MHz)
L	20407	824.7	20415	825.5	20425	826.5	20450	829
M	20525	836.5	20525	836.5	20525	836.5	20525	836.5
H	20643	848.3	20635	847.5	20625	846.5	20600	844

LTE Band 4												
	Bandwidth 1.4 MHz		Bandwidth 3 MHz		Bandwidth 5 MHz		Bandwidth 10 MHz		Bandwidth 15 MHz		Bandwidth 20 MHz	
	Ch. #	Freq. (MHz)	Ch. #	Freq. (MHz)	Ch. #	Freq. (MHz)	Ch. #	Freq. (MHz)	Ch. #	Freq. (MHz)	Ch. #	Freq. (MHz)
L	19957	1710.7	19965	1711.5	19975	1712.5	20000	1715	20025	1717.5	20050	1720
M	20175	1732.5	20175	1732.5	20175	1732.5	20175	1732.5	20175	1732.5	20175	1732.5
H	20393	1754.3	20385	1753.5	20375	1752.5	20350	1750	20325	1747.5	20300	1745

LTE Band 2												
	Bandwidth 1.4 MHz		Bandwidth 3 MHz		Bandwidth 5 MHz		Bandwidth 10 MHz		Bandwidth 15 MHz		Bandwidth 20 MHz	
	Ch. #	Freq. (MHz)	Ch. #	Freq. (MHz)	Ch. #	Freq. (MHz)	Ch. #	Freq. (MHz)	Ch. #	Freq. (MHz)	Ch. #	Freq. (MHz)
L	18607	1850.7	18615	1851.5	18625	1852.5	18650	1855	18675	1857.5	18700	1860
M	18900	1880	18900	1880	18900	1880	18900	1880	18900	1880	18900	1880
H	19193	1909.3	19185	1908.5	19175	1907.5	19150	1905	19125	1902.5	19100	1900

5. RF Exposure Limits

5.1 Uncontrolled Environment

Uncontrolled Environments are defined as locations where there is the exposure of individuals who have no knowledge or control of their exposure. The general population/uncontrolled exposure limits are applicable to situations in which the general public may be exposed or in which persons who are exposed as a consequence of their employment may not be made fully aware of the potential for exposure or cannot exercise control over their exposure. Members of the general public would come under this category when exposure is not employment-related; for example, in the case of a wireless transmitter that exposes persons in its vicinity.

5.2 Controlled Environment

Controlled Environments are defined as locations where there is exposure that may be incurred by persons who are aware of the potential for exposure, (i.e. as a result of employment or occupation). In general, occupational/controlled exposure limits are applicable to situations in which persons are exposed as a consequence of their employment, who have been made fully aware of the potential for exposure and can exercise control over their exposure. The exposure category is also applicable when the exposure is of a transient nature due to incidental passage through a location where the exposure levels may be higher than the general population/uncontrolled limits, but the exposed person is fully aware of the potential for exposure and can exercise control over his or her exposure by leaving the area or by some other appropriate means.

Limits for Occupational/Controlled Exposure (W/kg)

Whole-Body	Partial-Body	Hands, Wrists, Feet and Ankles
0.4	8.0	20.0

Limits for General Population/Uncontrolled Exposure (W/kg)

Whole-Body	Partial-Body	Hands, Wrists, Feet and Ankles
0.08	1.6	4.0

1. Whole-Body SAR is averaged over the entire body, partial-body SAR is averaged over any 1gram of tissue defined as a tissue volume in the shape of a cube. SAR for hands, wrists, feet and ankles is averaged over any 10 grams of tissue defined as a tissue volume in the shape of a cube.

6. Specific Absorption Rate (SAR)

6.1 Introduction

SAR is related to the rate at which energy is absorbed per unit mass in an object exposed to a radio field. The SAR distribution in a biological body is complicated and is usually carried out by experimental techniques or numerical modeling. The standard recommends limits for two tiers of groups, occupational/controlled and general population/uncontrolled, based on a person's awareness and ability to exercise control over his or her exposure. In general, occupational/controlled exposure limits are higher than the limits for general population/uncontrolled.

6.2 SAR Definition

The SAR definition is the time derivative (rate) of the incremental energy (dW) absorbed by (dissipated in) an incremental mass (dm) contained in a volume element (dv) of a given density (ρ). The equation description is as below:

$$\mathbf{SAR} = \frac{\mathbf{d}}{\mathbf{dt}}\left(\frac{\mathbf{dW}}{\mathbf{dm}}\right) = \frac{\mathbf{d}}{\mathbf{dt}}\left(\frac{\mathbf{dW}}{\boldsymbol{\rho}\mathbf{dv}}\right)$$

SAR is expressed in units of Watts per kilogram (W/kg)

$$\mathbf{SAR} = \frac{\boldsymbol{\sigma}|\mathbf{E}|^{\mathbf{2}}}{\boldsymbol{\rho}}$$

Where: σ is the conductivity of the tissue, ρ is the mass density of the tissue and E is the RMS electrical field strength.

7. System Description and Setup

The DASY system used for performing compliance tests consists of the following items:

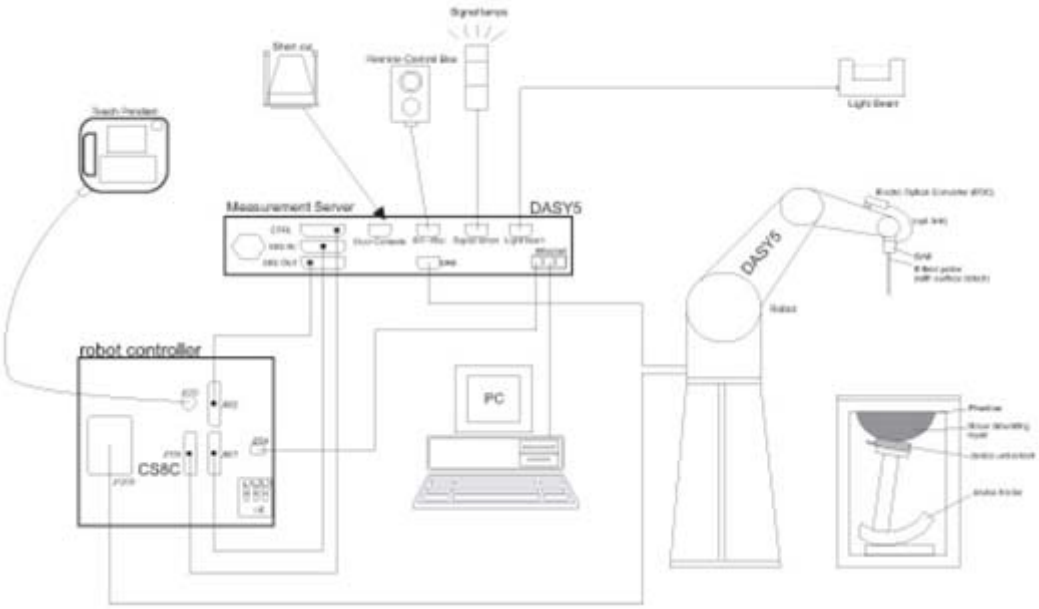

- A standard high precision 6-axis robot with controller, teach pendant and software. An arm extension for accommodating the data acquisition electronics (DAE).
- An isotropic Field probe optimized and calibrated for the targeted measurement.
- A data acquisition electronics (DAE) which performs the signal amplification, signal multiplexing, AD-conversion, offset measurements, mechanical surface detection, collision detection, etc. The unit is battery powered with standard or rechargeable batteries. The signal is optically transmitted to the EOC.
- The Electro-optical converter (EOC) performs the conversion from optical to electrical signals for the digital communication to the DAE. To use optical surface detection, a special version of the EOC is required. The EOC signal is transmitted to the measurement server.
- The function of the measurement server is to perform the time critical tasks such as signal filtering, control of the robot operation and fast movement interrupts.
- The Light Beam used is for probe alignment. This improves the (absolute) accuracy of the probe positioning.
- A computer running WinXP or Win7 and the DASY5 software.
- Remote control and teach pendant as well as additional circuitry for robot safety such as warning lamps, etc.
- The phantom, the device holder and other accessories according to the targeted measurement.

8. Measurement Procedures

The measurement procedures are as follows:

<Conducted power measurement>

(a) For WWAN power measurement, use base station simulator to configure EUT WWAN transmission in conducted connection with RF cable, at maximum power in each supported wireless interface and frequency band.
(b) Read the WWAN RF power level from the base station simulator.
(c) For WLAN/BT power measurement, use engineering software to configure EUT WLAN/BT continuously transmission, at maximum RF power in each supported wireless interface and frequency band
(d) Connect EUT RF port through RF cable to the power meter, and measure WLAN/BT output power

<SAR measurement>

(a) Use base station simulator to configure EUT WWAN transmission in radiated connection, and engineering software to configure EUT WLAN/BT continuously transmission, at maximum RF power, in the highest power channel.
(b) Place the EUT in the positions as Appendix D demonstrates.
(c) Set scan area, grid size and other setting on the DASY software.
(d) Measure SAR results for the highest power channel on each testing position.
(e) Find out the largest SAR result on these testing positions of each band
(f) Measure SAR results for other channels in worst SAR testing position if the reported SAR of highest power channel is larger than 0.8 W/kg

According to the test standard, the recommended procedure for assessing the peak spatial-average SAR value consists of the following steps:

(a) Power reference measurement
(b) Area scan
(c) Zoom scan
(d) Power drift measurement

8.1 Spatial Peak SAR Evaluation

The procedure for spatial peak SAR evaluation has been implemented according to the test standard. It can be conducted for 1g and 10g, as well as for user-specific masses. The DASY software includes all numerical procedures necessary to evaluate the spatial peak SAR value.

The base for the evaluation is a "cube" measurement. The measured volume must include the 1g and 10g cubes with the highest averaged SAR values. For that purpose, the center of the measured volume is aligned to the interpolated peak SAR value of a previously performed area scan.

The entire evaluation of the spatial peak values is performed within the post-processing engine (SEMCAD). The system always gives the maximum values for the 1g and 10g cubes. The algorithm to find the cube with highest averaged SAR is divided into the following stages:

(a) Extraction of the measured data (grid and values) from the Zoom Scan
(b) Calculation of the SAR value at every measurement point based on all stored data (A/D values and measurement parameters)
(c) Generation of a high-resolution mesh within the measured volume
(d) Interpolation of all measured values form the measurement grid to the high-resolution grid
(e) Extrapolation of the entire 3-D field distribution to the phantom surface over the distance from sensor to surface
(f) Calculation of the averaged SAR within masses of 1g and 10g

8.2 Power Reference Measurement

The Power Reference Measurement and Power Drift Measurements are for monitoring the power drift of the device under test in the batch process. The minimum distance of probe sensors to surface determines the closest measurement point to phantom surface. This distance cannot be smaller than the distance of sensor calibration points to probe tip as defined in the probe properties.

8.3 Area Scan

The area scan is used as a fast scan in two dimensions to find the area of high field values, before doing a fine measurement around the hot spot. The sophisticated interpolation routines implemented in DASY software can find the maximum found in the scanned area, within a range of the global maximum. The range (in dB0 is specified in the standards for compliance testing. For example, a 2 dB range is required in IEEE standard 1528 and IEC 62209 standards, whereby 3 dB is a requirement when compliance is assessed in accordance with the ARIB standard (Japan), if only one zoom scan follows the area scan, then only the absolute maximum will be taken as reference. For cases where multiple maximums are detected, the number of zoom scans has to be increased accordingly.

Area scan parameters extracted from FCC KDB 865664 D01v01r03 SAR measurement 100 MHz to 6 GHz.

	≤ 3 GHz	> 3 GHz
Maximum distance from closest measurement point (geometric center of probe sensors) to phantom surface	5 ± 1 mm	½·δ·ln(2) ± 0.5 mm
Maximum probe angle from probe axis to phantom surface normal at the measurement location	30° ± 1°	20° ± 1°
Maximum area scan spatial resolution: Δx_{Area}, Δy_{Area}	≤ 2 GHz: ≤ 15 mm 2 – 3 GHz: ≤ 12 mm	3 – 4 GHz: ≤ 12 mm 4 – 6 GHz: ≤ 10 mm
	When the x or y dimension of the test device, in the measurement plane orientation, is smaller than the above, the measurement resolution must be ≤ the corresponding x or y dimension of the test device with at least one measurement point on the test device.	

8.4 Zoom Scan

Zoom scans are used assess the peak spatial SAR values within a cubic averaging volume containing 1 gram and 10 gram of simulated tissue. The zoom scan measures points (refer to table below) within a cube shoes base faces are centered on the maxima found in a preceding area scan job within the same procedure. When the measurement is done, the zoom scan evaluates the averaged SAR for 1 gram and 10 gram and displays these values next to the job's label.

Zoom scan parameters extracted from FCC KDB 865664 D01v01r03 SAR measurement 100 MHz to 6 GHz.

			≤ 3 GHz	> 3 GHz
Maximum zoom scan spatial resolution: Δx_{Zoom}, Δy_{Zoom}			≤ 2 GHz: ≤ 8 mm 2 – 3 GHz: ≤ 5 mm*	3 – 4 GHz: ≤ 5 mm* 4 – 6 GHz: ≤ 4 mm*
Maximum zoom scan spatial resolution, normal to phantom surface	uniform grid: $\Delta z_{Zoom}(n)$		≤ 5 mm	3 – 4 GHz: ≤ 4 mm 4 – 5 GHz: ≤ 3 mm 5 – 6 GHz: ≤ 2 mm
	graded grid	$\Delta z_{Zoom}(1)$: between 1st two points closest to phantom surface	≤ 4 mm	3 – 4 GHz: ≤ 3 mm 4 – 5 GHz: ≤ 2.5 mm 5 – 6 GHz: ≤ 2 mm
		$\Delta z_{Zoom}(n>1)$: between subsequent points	$\leq 1.5 \cdot \Delta z_{Zoom}(n-1)$	
Minimum zoom scan volume	x, y, z		≥ 30 mm	3 – 4 GHz: ≥ 28 mm 4 – 5 GHz: ≥ 25 mm 5 – 6 GHz: ≥ 22 mm

Note: δ is the penetration depth of a plane-wave at normal incidence to the tissue medium; see draft standard IEEE P1528-2011 for details.

* When zoom scan is required and the *reported* SAR from the *area scan based 1-g SAR estimation* procedures of KDB 447498 is ≤ 1.4 W/kg, ≤ 8 mm, ≤ 7 mm and ≤ 5 mm zoom scan resolution may be applied, respectively, for 2 GHz to 3 GHz, 3 GHz to 4 GHz and 4 GHz to 6 GHz.

8.5 Volume Scan Procedures

The volume scan is used for assess overlapping SAR distributions for antennas transmitting in different frequency bands. It is equivalent to an oversized zoom scan used in standalone measurements. The measurement volume will be used to enclose all the simultaneous transmitting antennas. For antennas transmitting simultaneously in different frequency bands, the volume scan is measured separately in each frequency band. In order to sum correctly to compute the 1g aggregate SAR, the EUT remain in the same test position for all measurements and all volume scan use the same spatial resolution and grid spacing. When all volume scan were completed, the software, SEMCAD postprocessor can combine and subsequently superpose these measurement data to calculating the multiband SAR.

8.6 Power Drift Monitoring

All SAR testing is under the EUT install full charged battery and transmit maximum output power. In DASY measurement software, the power reference measurement and power drift measurement procedures are used for monitoring the power drift of EUT during SAR test. Both these procedures measure the field at a specified reference position before and after the SAR testing. The software will calculate the field difference in dB. If the power drifts more than 5%, the SAR will be retested.

9. Test Equipment List

Manufacturer	Name of Equipment	Type/Model	Serial Number	Calibration	
				Last Cal.	Due Date
SPEAG	750MHz System Validation Kit	D750V3	1099	Nov. 11, 2013	Nov. 10, 2014
SPEAG	835MHz System Validation Kit	D835V2	4d151	Mar. 25, 2013	Mar. 23, 2015
SPEAG	1750MHz System Validation Kit	D1750V2	1090	Mar. 27, 2013	Mar. 25, 2015
SPEAG	1900MHz System Validation Kit	D1900V2	5d170	Mar. 27, 2013	Mar. 25, 2015
SPEAG	2450MHz System Validation Kit	D2450V2	908	Mar. 26, 2013	Mar. 24, 2015
SPEAG	5000MHz System Validation Kit	D5000V2	1006	Sep. 23, 2013	Sep. 22, 2014
SPEAG	Data Acquisition Electronics	DAE4	1358	Apr. 30, 2014	Apr. 29, 2015
SPEAG	Data Acquisition Electronics	DAE4	1210	May 19, 2014	May 18, 2015
SPEAG	Dosimetric E-Field Probe	EX3DV4	3911	Apr. 22, 2014	Apr. 21, 2015
SPEAG	Dosimetric E-Field Probe	EX3DV4	3857	May 23, 2014	May 22, 2015
SPEAG	SAM Twin Phantom	QD 000 P40 CD	TP-1753	NCR	NCR
SPEAG	SAM Twin Phantom	QD 000 P40 CD	TP-1754	NCR	NCR
SPEAG	SAM Twin Phantom	QD 000 P40 CB	TP-1479	NCR	NCR
SPEAG	Phone Positioner	N/A	N/A	NCR	NCR
Agilent	Wireless Communication Test Set	E5515C	MY52102600	Dec. 30, 2013	Dec. 29, 2014
Agilent	Wireless Communication Test Set	E5515C	MY50266977	May 06, 2014	May 05, 2015
Anritus	Radio communication analyzer	MT8820C	6201074235	Nov. 05, 2013	Nov. 04, 2014
Anritus	Radio communication analyzer	MT8820C	6201341977	Oct, 26,2013	Oct, 25,2014
Agilent	ENA Series Network Analyzer	E5071C	MY46111157	Dec. 30, 2013	Dec. 29, 2014
Agilent	Dielectric Probe Kit	85070E	MY44300751	NCR	NCR
Anritsu	Power Meter	ML2495A	1005002	Feb. 27, 2014	Feb. 26, 2015
Anritsu	Power Sensor	MA2411B	917070	Feb. 27, 2014	Feb. 26, 2015
AR	Amplifier	5S1G4	342137	NCR	NCR
R&S	Spectrum Analyzer	FSP7	101045	Dec. 30, 2013	Dec. 29, 2014
Agilent	Dual Directional Coupler	778D	50422	Note 1	
Woken	Attenuator	WK0602-XX	N/A	Note 1	
PE	Attenuator	PE7005-10	N/A	Note 1	
PE	Attenuator	PE7005- 3	N/A	Note 1	
AR	Power Amplifier	5S1G4M2	0328767	Note 1	
Mini-Circuits	Power Amplifier	ZVE-3W	162601250	Note 1	
Mini-Circuits	Power Amplifier	ZHL-42W+	13440021344	Note 1	

General Note:

1. Prior to system verification and validation, the path loss from the signal generator to the system check source and the power meter, which includes the amplifier, cable, attenuator and directional coupler, was measured by the network analyzer. The reading of the power meter was offset by the path loss difference between the path to the power meter and the path to the system check source to monitor the actual power level fed to the system check source.
2. Referring to KDB 865664 D01v01r03, the dipole calibration interval can be extended to 3 years with justification. The dipoles are also not physically damaged, or repaired during the interval.
3. The justification data of dipole D835V2, SN: 4d151, D1750V2, SN: 1090, D1900V2, SN: 5d170, D2450V2, SN: 908 can be found in appendix C. The return loss is < -20dB, within 20% of prior calibration, the impedance is within 5 ohm of prior calibration.

10. System Verification

10.1 Tissue Verification

The following tissue formulations are provided for reference only as some of the parameters have not been thoroughly verified. The composition of ingredients may be modified accordingly to achieve the desired target tissue parameters required for routine SAR evaluation.

Frequency (MHz)	Water (%)	Sugar (%)	Cellulose (%)	Salt (%)	Preventol (%)	DGBE (%)	Conductivity (σ)	Permittivity (εr)
For Body								
750	51.7	47.2	0	0.9	0.1	0	0.96	55.5
835	50.8	48.2	0	0.9	0.1	0	0.97	55.2
1750	70.2	0	0	0.4	0	29.4	1.49	53.4
1800, 1900, 2000	70.2	0	0	0.4	0	29.4	1.52	53.3
2450	68.6	0	0	0	0	31.4	1.95	52.7

Simulating Liquid for 5GHz, Manufactured by SPEAG

Ingredients	(% by weight)
Water	64~78%
Mineral oil	11~18%
Emulsifiers	9~15%
Additives and Salt	2~3%

<Tissue Dielectric Parameter Check Results>

Frequency (MHz)	Tissue Type	Liquid Temp. (℃)	Conductivity (σ)	Permittivity (ε_r)	Conductivity Target (σ)	Permittivity Target (ε_r)	Delta (σ) (%)	Delta (ε_r) (%)	Limit (%)	Date
750	Body	22.5	0.966	53.934	0.96	55.5	0.63	-2.82	±5	Jul. 25, 2014
835	Body	22.7	0.974	54.111	0.97	55.2	0.41	-1.97	±5	Jul. 24, 2014
1750	Body	22.6	1.522	54.439	1.49	53.4	2.15	1.95	±5	Jul. 24, 2014
1900	Body	22.6	1.528	53.974	1.52	53.3	0.53	1.26	±5	Jul. 23, 2014
2450	Body	22.6	1.984	51.165	1.95	52.70	1.74	-2.91	±5	Jul. 31, 2014
5200	Body	22.6	5.297	49.185	5.30	49.00	-0.06	0.38	±5	Aug. 18, 2014
5800	Body	22.6	6.127	47.784	6.00	48.20	2.12	-0.86	±5	Aug. 18, 2014

10.2 System Performance Check Results

Comparing to the original SAR value provided by SPEAG, the verification data should be within its specification of 10 %. Below table shows the target SAR and measured SAR after normalized to 1W input power. The table below indicates the system performance check can meet the variation criterion and the plots can be referred to Appendix A of this report.

Date	Frequency (MHz)	Tissue Type	Input Power (mW)	Dipole S/N	Probe S/N	DAE S/N	Measured SAR (W/kg)	Targeted SAR (W/kg)	Normalized SAR (W/kg)	Deviation (%)
Jul. 25, 2014	750	Body	250	1099	3911	1358	2.03	8.56	8.12	-5.14
Jul. 24, 2014	835	Body	250	4d151	3911	1358	2.33	9.43	9.32	-1.17
Jul. 24, 2014	1750	Body	250	1090	3911	1358	9.53	38.10	38.12	0.05
Jul. 23, 2014	1900	Body	250	5d170	3911	1358	9.88	41.20	39.52	-4.08
Jul. 31, 2014	2450	Body	250	908	3911	1358	13.30	50.40	53.2	5.56
Aug. 18, 2014	5200	Body	100	1006	3857	1210	7.24	71.50	72.4	1.26
Aug. 18, 2014	5800	Body	100	1006	3857	1210	7.08	72.30	70.8	-2.07

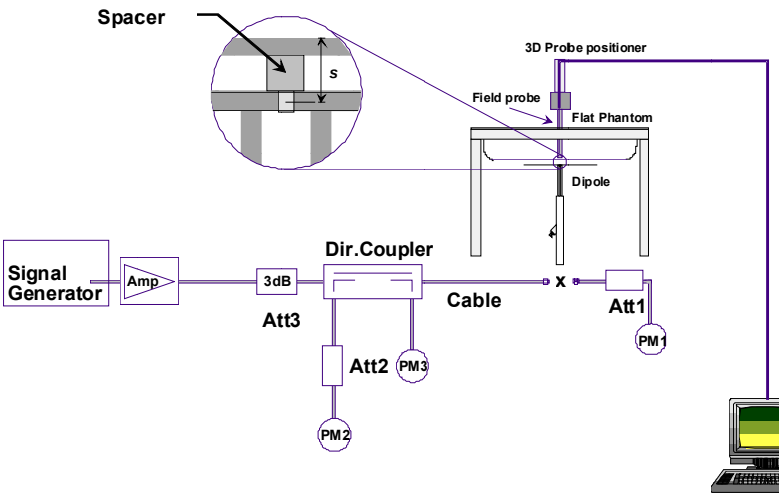

Fig 8.3.1 System Performance Check Setup

Fig 8.3.2 Setup Photo

11. RF Exposure Positions

11.1 Body Position

(a) To position the device parallel to the phantom surface with all sides and either keypad up or down.
(b) To adjust the device parallel to the flat phantom.
(c) To adjust the distance between the device and the flat phantom to 1 cm.

<EUT Setup Photos>

Please refer to Appendix D for the test setup photos.

12. Conducted RF Output Power (Unit: dBm)

<WCDMA Conducted Power>

1. The following tests were conducted according to the test requirements outlines in 3GPP TS 34.121 specification.
2. The procedures in KDB 941225 D01 are applied for 3GPP Rel. 6 HSPA to configure the device in the required sub-test mode(s) to determine SAR test exclusion.
3. For DC-HSDPA, the device was configured according to the H-Set 12, Fixed Reference Channel (FRC) configuration in Table C.8.1.12 of 3GPP TS 34.121-1, with the primary and the secondary serving HS-DSCH Cell enabled during the power measurement.

A summary of these settings are illustrated below:

HSDPA Setup Configuration:

a. The EUT was connected to Base Station Agilent E5515C referred to the Setup Configuration.
b. The RF path losses were compensated into the measurements.
c. A call was established between EUT and Base Station with following setting:
   i. Set Gain Factors (β_c and β_d) and parameters were set according to each
   ii. Specific sub-test in the following table, C10.1.4, quoted from the TS 34.121
   iii. Set RMC 12.2Kbps + HSDPA mode.
   iv. Set Cell Power = -86 dBm
   v. Set HS-DSCH Configuration Type to FRC (H-set 1, QPSK)
   vi. Select HSDPA Uplink Parameters
   vii. Set Delta ACK, Delta NACK and Delta CQI = 8
   viii. Set Ack-Nack Repetition Factor to 3
   ix. Set CQI Feedback Cycle (k) to 4 ms
   x. Set CQI Repetition Factor to 2
   xi. Power Ctrl Mode = All Up bits
d. The transmitted maximum output power was recorded.

Table C.10.1.4: β values for transmitter characteristics tests with HS-DPCCH

Sub-test	β_c	β_d	β_d (SF)	β_c/β_d	β_{HS} (Note1, Note 2)	CM (dB) (Note 3)	MPR (dB) (Note 3)
1	2/15	15/15	64	2/15	4/15	0.0	0.0
2	12/15 (Note 4)	15/15 (Note 4)	64	12/15 (Note 4)	24/15	1.0	0.0
3	15/15	8/15	64	15/8	30/15	1.5	0.5
4	15/15	4/15	64	15/4	30/15	1.5	0.5

Note 1: Δ_{ACK}, Δ_{NACK} and Δ_{CQI} = 30/15 with β_{hs} = 30/15 * β_c.

Note 2: For the HS-DPCCH power mask requirement test in clause 5.2C, 5.7A, and the Error Vector Magnitude (EVM) with HS-DPCCH test in clause 5.13.1A, and HSDPA EVM with phase discontinuity in clause 5.13.1AA, Δ_{ACK} and Δ_{NACK} = 30/15 with β_{hs} = 30/15 * β_c, and Δ_{CQI} = 24/15 with β_{hs} = 24/15 * β_c.

Note 3: CM = 1 for β_c/β_d =12/15, β_{hs}/β_c=24/15. For all other combinations of DPDCH, DPCCH and HS-DPCCH the MPR is based on the relative CM difference. This is applicable for only UEs that support HSDPA in release 6 and later releases.

Note 4: For subtest 2 the β_c/β_d ratio of 12/15 for the TFC during the measurement period (TF1, TF0) is achieved by setting the signalled gain factors for the reference TFC (TF1, TF1) to β_c = 11/15 and β_d = 15/15.

Setup Configuration

HSUPA Setup Configuration:

a. The EUT was connected to Base Station Agilent E5515C referred to the Setup Configuration.
b. The RF path losses were compensated into the measurements.
c. A call was established between EUT and Base Station with following setting * :
   i. Call Configs = 5.2B, 5.9B, 5.10B, and 5.13.2B with QPSK
   ii. Set the Gain Factors (β_c and β_d) and parameters (AG Index) were set according to each specific sub-test in the following table, C11.1.3, quoted from the TS 34.121
   iii. Set Cell Power = -86 dBm
   iv. Set Channel Type = 12.2k + HSPA
   v. Set UE Target Power
   vi. Power Ctrl Mode= Alternating bits
   vii. Set and observe the E-TFCI
   viii. Confirm that E-TFCI is equal to the target E-TFCI of 75 for sub-test 1, and other subtest's E-TFCI
d. The transmitted maximum output power was recorded.

Table C.11.1.3: β values for transmitter characteristics tests with HS-DPCCH and E-DCH

Sub-test	β_c	β_d	β_d (SF)	β_c/β_d	β_{HS} (Note1)	β_{ec}	β_{ed} (Note 5) (Note 6)	β_{ed} (SF)	β_{ed} (Codes)	CM (dB) (Note 2)	MPR (dB) (Note 2)	AG Index (Note 6)	E-TFCI
1	11/15 (Note 3)	15/15 (Note 3)	64	11/15 (Note 3)	22/15	209/225	1309/225	4	1	1.0	0.0	20	75
2	6/15	15/15	64	6/15	12/15	12/15	94/75	4	1	3.0	2.0	12	67
3	15/15	9/15	64	15/9	30/15	30/15	β_{ed}1: 47/15 β_{ed}2: 47/15	4 4	2	2.0	1.0	15	92
4	2/15	15/15	64	2/15	4/15	2/15	56/75	4	1	3.0	2.0	17	71
5	15/15 (Note 4)	15/15 (Note 4)	64	15/15 (Note 4)	30/15	24/15	134/15	4	1	1.0	0.0	21	81

Note 1: Δ_{ACK}, Δ_{NACK} and Δ_{CQI} = 30/15 with β_{hs} = 30/15 * β_c .

Note 2: CM = 1 for β_c/β_d =12/15, β_{hs}/β_c=24/15. For all other combinations of DPDCH, DPCCH, HS- DPCCH, E-DPDCH and E-DPCCH the MPR is based on the relative CM difference.

Note 3: For subtest 1 the β_c/β_d ratio of 11/15 for the TFC during the measurement period (TF1, TF0) is achieved by setting the signalled gain factors for the reference TFC (TF1, TF1) to β_c = 10/15 and β_d = 15/15.

Note 4: For subtest 5 the β_c/β_d ratio of 15/15 for the TFC during the measurement period (TF1, TF0) is achieved by setting the signalled gain factors for the reference TFC (TF1, TF1) to β_c = 14/15 and β_d = 15/15.

Note 5: In case of testing by UE using E-DPDCH Physical Layer category 1, Sub-test 3 is omitted according to TS25.306 Table 5.1g.

Note 6: β_{ed} can not be set directly, it is set by Absolute Grant Value.

Setup Configuration

DC-HSDPA 3GPP release 8 Setup Configuration:

a. The EUT was connected to Base Station Agilent E5515C referred to the Setup Configuration below
b. The RF path losses were compensated into the measurements.
c. A call was established between EUT and Base Station with following setting:
   i. Set RMC 12.2Kbps + HSDPA mode.
   ii. Set Cell Power = -25 dBm
   iii. Set HS-DSCH Configuration Type to FRC (H-set 12, QPSK)
   iv. Select HSDPA Uplink Parameters
   v. Set Gain Factors (β_c and β_d) and parameters were set according to each Specific sub-test in the following table, C10.1.4, quoted from the TS 34.121
      a). Subtest 1: β_c/β_d=2/15
      b). Subtest 2: β_c/β_d=12/15
      c). Subtest 3: β_c/β_d=15/8
      d). Subtest 4: β_c/β_d=15/4
   vi. Set Delta ACK, Delta NACK and Delta CQI = 8
   vii. Set Ack-Nack Repetition Factor to 3
   viii. Set CQI Feedback Cycle (k) to 4 ms
   ix. Set CQI Repetition Factor to 2
   x. Power Ctrl Mode = All Up bits
d. The transmitted maximum output power was recorded.

The following tests were conducted according to the test requirements outlines in 3GPP TS 34.121 specification.
A summary of these settings are illustrated below:

C.8.1.12 Fixed Reference Channel Definition H-Set 12

Table C.8.1.12: Fixed Reference Channel H-Set 12

Parameter	Unit	Value
Nominal Avg. Inf. Bit Rate	kbps	60
Inter-TTI Distance	TTI's	1
Number of HARQ Processes	Processes	6
Information Bit Payload (N_{INF})	Bits	120
Number Code Blocks	Blocks	1
Binary Channel Bits Per TTI	Bits	960
Total Available SML's in UE	SML's	19200
Number of SML's per HARQ Proc.	SML's	3200
Coding Rate		0.15
Number of Physical Channel Codes	Codes	1
Modulation		QPSK
Note 1: The RMC is intended to be used for DC-HSDPA mode and both cells shall transmit with identical parameters as listed in the table.		
Note 2: Maximum number of transmission is limited to 1, i.e., retransmission is not allowed. The redundancy and constellation version 0 shall be used.		

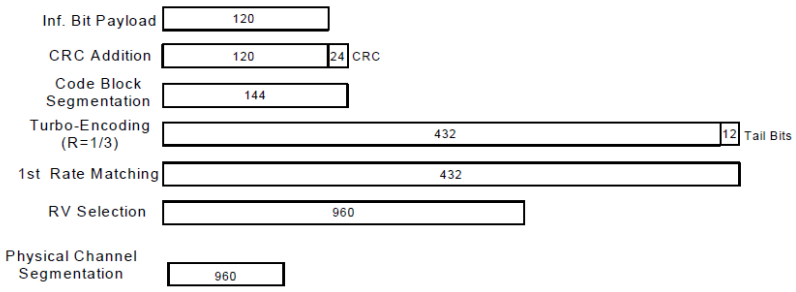

Figure C.8.19: Coding rate for Fixed reference Channel H-Set 12 (QPSK)

Setup Configuration

<WCDMA Conducted Power>

General Note:

4. SAR testing in AMR configuration is not required when the maximum average output of each RF channel for AMR 12.2Kbps is less than 0.25dB higher than that measured in RMC 12.2Kbps
5. Per KDB 941225 D02v02r02, RMC 12.2kbps setting is used to evaluate SAR. If HSDPA/HSUPA/DC-HSDPA output power is < 0.25dB higher than RMC, or reported SAR with RMC 12.2kbps setting is ≤ 1.2W/kg, HSDPA/HSUPA/DC-HSDPA SAR evaluation can be excluded..

Band			WCDMA Band V				WCDMA Band II			
Tx Channel			4132	4182	4233	Tune-up Limit (dBm)	9262	9400	9538	Tune-up Limit (dBm)
Rx Channel			4357	4407	4458		9662	9800	9938	
Frequency (MHz)			826.4	836.4	846.6		1852.4	1880	1907.6	
MPR (dB)	3GPP Rel 99	RMC 12.2Kbps	23.10	23.19	**23.25**	24.0	**22.76**	22.67	22.59	23.5
0	3GPP Rel 6	HSDPA Subtest-1	21.58	21.61	21.68	22.0	21.62	21.32	21.21	22.0
0	3GPP Rel 6	HSDPA Subtest-2	21.57	21.59	21.66	22.0	21.61	21.29	21.28	22.0
0.5	3GPP Rel 6	HSDPA Subtest-3	21.64	21.67	21.71	22.0	21.72	21.43	21.38	22.0
0.5	3GPP Rel 6	HSDPA Subtest-4	21.61	21.65	21.73	22.0	21.74	21.44	21.39	22.0
0	3GPP Rel 8	DC-HSDPA Subtest-1	21.46	21.68	21.68	22.0	21.61	21.34	21.19	22.0
0	3GPP Rel 8	DC-HSDPA Subtest-2	21.65	21.69	21.72	22.0	21.58	21.33	21.19	22.0
0.5	3GPP Rel 8	DC-HSDPA Subtest-3	21.52	21.75	21.73	22.0	21.61	21.36	21.15	22.0
0.5	3GPP Rel 8	DC-HSDPA Subtest-4	21.52	21.73	21.72	22.0	21.60	21.37	21.13	22.0
0	3GPP Rel 6	HSUPA Subtest-1	21.35	21.38	21.69	22.0	21.42	20.84	20.83	21.5
2	3GPP Rel 6	HSUPA Subtest-2	20.38	20.39	20.74	21.0	20.73	20.25	20.23	21.0
1	3GPP Rel 6	HSUPA Subtest-3	20.32	20.35	20.36	20.5	20.68	20.21	20.18	21.0
2	3GPP Rel 6	HSUPA Subtest-4	21.33	21.35	21.67	22.0	21.11	20.56	20.54	21.5
0	3GPP Rel 6	HSUPA Subtest-5	20.40	20.42	20.78	21.0	20.72	20.24	20.22	21.0

<LTE Conducted Power>

General Note:

1. Anritsu MT8820C base station simulator was used to setup the connection with EUT; the frequency band, channel bandwidth, RB allocation configuration, modulation type are set in the base station simulator to configure EUT transmitting at maximum power and at different configurations which are requested to be reported to FCC, for conducted power measurement and SAR testing.
2. Per KDB 941225 D05v02r03, when a properly configured base station simulator is used for the SAR and power measurements, spectrum plots for each RB allocation and offset configuration is not required.
3. Per KDB 941225 D05v02r03, start with the largest channel bandwidth and measure SAR for QPSK with 1 RB allocation, using the RB offset and required test channel combination with the highest maximum output power for RB offsets at the upper edge, middle and lower edge of each required test channel.
4. Per KDB 941225 D05v02r03, 50% RB allocation for QPSK SAR testing follows 1RB QPSK allocation procedure.
5. Per KDB 941225 D05v02r03, For QPSK with 100% RB allocation, SAR is not required when the highest maximum output power for 100 % RB allocation is less than the highest maximum output power in 50% and 1 RB allocations and the highest reported SAR for 1 RB and 50% RB allocation are ≤ 0.8 W/kg. Otherwise, SAR is measured for the highest output power channel; and if the reported SAR is > 1.45 W/kg, the remaining required test channels must also be tested.
6. Per KDB 941225 D05v02r03, 16QAM output power for each RB allocation configuration is > not ½ dB higher than the same configuration in QPSK and the reported SAR for the QPSK configuration is ≤ 1.45 W/kg; Per KDB 941225 D05v02r03, 16QAM SAR testing is not required.
7. Per KDB 941225 D05v02r03, Smaller bandwidth output power for each RB allocation configuration is > not ½ dB higher than the same configuration in the largest supported bandwidth, and the reported SAR for the largest supported bandwidth is ≤ 1.45 W/kg; Per KDB 941225 D05v02r03, smaller bandwidth SAR testing is not required.

<LTE Band 17>

BW [MHz]	Modulation	RB Size	RB Offset	Power Low Ch. / Freq.	Power Middle Ch. / Freq.	Power High Ch. / Freq.	Tune up Limit (dBm)	MPR (dB)
Channel				23780	23790	23800		
Frequency (MHz)				709	710	711		
10	QPSK	1	0	22.71	22.69	22.82	23.5	0
10	QPSK	1	24	22.74	22.92	22.95		
10	QPSK	1	49	22.89	23.07	**23.16**		
10	QPSK	25	0	21.86	21.88	21.84	22.5	0-1
10	QPSK	25	12	21.79	21.80	21.89		
10	QPSK	25	24	21.96	21.93	21.99		
10	QPSK	50	0	21.82	21.90	21.98		
10	16QAM	1	0	21.87	21.48	22.05	22.5	0-1
10	16QAM	1	24	21.69	21.62	21.98		
10	16QAM	1	49	21.94	21.82	22.12		
10	16QAM	25	0	20.86	20.91	20.85	21.5	0-2
10	16QAM	25	12	20.78	20.82	20.90		
10	16QAM	25	24	20.90	20.85	20.88		
10	16QAM	50	0	20.82	20.77	20.89		
Channel				23755	23790	23825	Tune up Limit (dBm)	MPR (dB)
Frequency (MHz)				706.5	710	713.5		
5	QPSK	1	0	22.63	22.74	22.85	23.5	0
5	QPSK	1	12	22.82	22.89	22.95		
5	QPSK	1	24	22.87	22.93	23.08		
5	QPSK	12	0	21.78	21.78	21.96	22.5	0-1
5	QPSK	12	6	21.84	21.95	21.95		
5	QPSK	12	11	21.91	21.91	22.09		
5	QPSK	25	0	22.02	21.77	21.89		
5	16QAM	1	0	21.68	21.51	21.63	22.5	0-1
5	16QAM	1	12	21.70	21.96	21.73		
5	16QAM	1	24	21.72	22.02	21.78		
5	16QAM	12	0	20.79	20.82	20.87	21.5	0-2
5	16QAM	12	6	20.82	21.00	20.84		
5	16QAM	12	11	20.96	20.86	21.01		
5	16QAM	25	0	20.84	20.88	20.96		

<LTE Band 5>

BW [MHz]	Modulation	RB Size	RB Offset	Power Low Ch. / Freq.	Power Middle Ch. / Freq.	Power High Ch. / Freq.	Tune up Limit (dBm)	MPR (dB)
Channel				20450	20525	20600		
Frequency (MHz)				829	836.5	844		
10	QPSK	1	0	22.85	22.76	22.84	24.0	0
10	QPSK	1	24	22.79	22.75	22.76		
10	QPSK	1	49	22.82	22.67	22.72		
10	QPSK	25	0	21.89	21.88	21.83	23.0	0-1
10	QPSK	25	12	21.84	21.83	21.83		
10	QPSK	25	24	21.88	21.83	21.78		
10	QPSK	50	0	21.83	21.90	21.87		
10	16QAM	1	0	22.10	21.95	22.01	23.0	0-1
10	16QAM	1	24	21.64	21.51	21.65		
10	16QAM	1	49	21.86	21.55	21.61		
10	16QAM	25	0	20.92	21.75	21.86	22.0	0-2
10	16QAM	25	12	20.86	21.76	21.76		
10	16QAM	25	24	20.94	21.58	21.94		
10	16QAM	50	0	20.96	20.92	20.88		
Channel				20425	20525	20625	Tune up Limit (dBm)	MPR (dB)
Frequency (MHz)				826.5	836.5	846.5		
5	QPSK	1	0	22.83	22.82	22.70	24.0	0
5	QPSK	1	12	22.82	22.79	22.57		
5	QPSK	1	24	22.78	22.81	22.62		
5	QPSK	12	0	21.87	21.77	21.83	23.0	0-1
5	QPSK	12	6	21.88	21.88	21.79		
5	QPSK	12	11	21.94	21.83	21.76		
5	QPSK	25	0	21.82	21.81	21.80		
5	16QAM	1	0	22.04	21.81	21.66	23.0	0-1
5	16QAM	1	12	22.01	21.74	21.48		
5	16QAM	1	24	21.47	21.78	21.46		
5	16QAM	12	0	21.00	21.80	21.53	22.0	0-2
5	16QAM	12	6	20.87	21.73	21.58		
5	16QAM	12	11	20.96	21.69	21.59		
5	16QAM	25	0	20.86	20.90	20.80		
Channel				20415	20525	20635	Tune up Limit (dBm)	MPR (dB)
Frequency (MHz)				825.5	836.5	847.5		
3	QPSK	1	0	22.94	22.79	22.77	24.0	0
3	QPSK	1	7	22.81	22.78	22.69		
3	QPSK	1	14	22.88	22.75	22.70		
3	QPSK	8	0	21.86	21.83	21.75	23.0	0-1
3	QPSK	8	4	21.82	21.90	21.78		
3	QPSK	8	7	21.84	21.82	21.76		
3	QPSK	15	0	21.92	21.83	21.79		
3	16QAM	1	0	22.03	22.11	21.98	23.0	0-1
3	16QAM	1	7	21.65	21.92	21.64		
3	16QAM	1	14	21.86	21.48	21.97		
3	16QAM	8	0	20.94	21.92	21.89	22.0	0-2
3	16QAM	8	4	20.88	21.93	21.80		
3	16QAM	8	7	20.93	21.78	21.84		
3	16QAM	15	0	20.97	20.78	20.82		

Channel				20407	20525	20643	Tune up Limit (dBm)	Target MPR (dB)
Frequency (MHz)				824.7	836.5	848.3		
1.4	QPSK	1	0	22.90	22.87	22.78	24.0	0
1.4	QPSK	1	2	22.76	22.85	22.75		
1.4	QPSK	1	5	22.83	22.80	22.71		
1.4	QPSK	3	0	22.82	22.85	22.71		
1.4	QPSK	3	1	22.88	22.81	22.75		
1.4	QPSK	3	2	22.84	22.78	22.70		
1.4	QPSK	6	0	21.93	21.94	21.83	23.0	0-1
1.4	16QAM	1	0	21.89	21.92	21.78	23.0	0-1
1.4	16QAM	1	2	21.72	21.67	21.31		
1.4	16QAM	1	5	21.53	21.58	21.69		
1.4	16QAM	3	0	21.77	21.77	21.73		
1.4	16QAM	3	1	21.81	21.82	21.74		
1.4	16QAM	3	2	21.74	21.75	21.77		
1.4	16QAM	6	0	20.71	20.78	20.65	22.0	0-2

<LTE Band 4>

BW [MHz]	Modulation	RB Size	RB Offset	Power Low Ch. / Freq.	Power Middle Ch. / Freq.	Power High Ch. / Freq.	Tune up Limit (dBm)	MPR (dB)
Channel				20050	20175	20300		
Frequency (MHz)				1720	1732.5	1745		
20	QPSK	1	0	22.79	22.79	22.81	23.5	0
20	QPSK	1	49	22.52	22.76	22.78		
20	QPSK	1	99	22.72	22.70	22.50		
20	QPSK	50	0	21.95	21.99	21.91	22.5	0-1
20	QPSK	50	24	21.84	21.85	21.86		
20	QPSK	50	49	21.89	21.84	21.87		
20	QPSK	100	0	21.86	21.84	21.84		
20	16QAM	1	0	21.97	22.16	22.14	22.5	0-1
20	16QAM	1	49	21.92	21.64	21.73		
20	16QAM	1	99	21.69	21.93	21.39		
20	16QAM	50	0	20.87	20.94	20.81	21.5	0-2
20	16QAM	50	24	20.87	20.88	20.72		
20	16QAM	50	49	20.82	20.83	20.81		
20	16QAM	100	0	20.93	20.85	20.88		
Channel				20025	20175	20325	Tune up Limit (dBm)	MPR (dB)
Frequency (MHz)				1717.5	1732.5	1747.5		
15	QPSK	1	0	22.71	22.71	22.84	23.5	0
15	QPSK	1	37	22.61	22.69	22.77		
15	QPSK	1	74	22.64	22.66	22.70		
15	QPSK	36	0	21.80	21.84	21.84	22.5	0-1
15	QPSK	36	18	21.67	21.79	21.84		
15	QPSK	36	37	21.84	21.79	21.84		
15	QPSK	75	0	21.88	21.93	21.86		
15	16QAM	1	0	21.90	22.03	21.86	22.5	0-1
15	16QAM	1	37	21.77	21.94	21.44		
15	16QAM	1	74	21.76	21.55	21.79		
15	16QAM	36	0	20.84	20.79	20.76	21.5	0-2
15	16QAM	36	18	20.65	20.76	20.76		
15	16QAM	36	37	20.77	20.69	20.75		
15	16QAM	75	0	20.82	20.83	20.87		
Channel				20000	20175	20350	Tune up Limit (dBm)	MPR (dB)
Frequency (MHz)				1715	1732.5	1750		
10	QPSK	1	0	22.71	22.82	22.77	23.5	0
10	QPSK	1	24	22.62	22.80	22.70		
10	QPSK	1	49	22.67	22.79	22.59		
10	QPSK	25	0	21.79	21.83	21.84	22.5	0-1
10	QPSK	25	12	21.79	21.82	21.80		
10	QPSK	25	24	21.66	21.81	21.75		
10	QPSK	50	0	21.91	21.85	21.87		
10	16QAM	1	0	21.63	22.02	21.95	22.5	0-1
10	16QAM	1	24	21.55	21.80	21.51		
10	16QAM	1	49	21.13	21.77	21.48		
10	16QAM	25	0	20.85	20.85	20.79	21.5	0-2
10	16QAM	25	12	20.75	20.89	20.77		
10	16QAM	25	24	20.73	20.82	20.79		
10	16QAM	50	0	20.87	20.78	20.86		

Channel				19975	20175	20375	Tune up Limit (dBm)	MPR (dB)
Frequency (MHz)				1712.5	1732.5	1752.5		
5	QPSK	1	0	22.66	22.71	22.75	23.5	0
5	QPSK	1	12	22.64	22.67	22.69		
5	QPSK	1	24	22.60	22.69	22.70		
5	QPSK	12	0	21.86	21.80	21.69	22.5	0-1
5	QPSK	12	6	21.82	21.78	21.73		
5	QPSK	12	11	21.81	21.77	21.68		
5	QPSK	25	0	21.75	21.75	21.70		
5	16QAM	1	0	21.83	22.01	21.62	22.5	0-1
5	16QAM	1	12	21.80	21.59	21.49		
5	16QAM	1	24	21.30	21.74	21.51		
5	16QAM	12	0	20.81	20.83	20.75	21.5	0-2
5	16QAM	12	6	20.84	20.82	20.68		
5	16QAM	12	11	20.77	20.81	20.76		
5	16QAM	25	0	20.73	20.81	20.73		
Channel				19965	20175	20385	Tune up Limit (dBm)	MPR (dB)
Frequency (MHz)				1711.5	1732.5	1753.5		
3	QPSK	1	0	22.75	22.84	22.72	23.5	0
3	QPSK	1	7	22.67	22.71	22.53		
3	QPSK	1	14	22.67	22.77	22.71		
3	QPSK	8	0	21.74	21.79	21.72	22.5	0-1
3	QPSK	8	4	21.80	21.81	21.74		
3	QPSK	8	7	21.77	21.79	21.70		
3	QPSK	15	0	21.85	21.82	21.71		
3	16QAM	1	0	21.65	21.58	21.77	22.5	0-1
3	16QAM	1	7	21.63	21.49	21.76		
3	16QAM	1	14	21.58	21.51	21.69		
3	16QAM	8	0	20.74	20.83	20.74	21.5	0-2
3	16QAM	8	4	20.83	20.82	20.80		
3	16QAM	8	7	20.85	20.82	20.81		
3	16QAM	15	0	20.77	20.79	20.59		
Channel				19957	20175	20393	Tune up Limit (dBm)	MPR (dB)
Frequency (MHz)				1710.7	1732.5	1754.3		
1.4	QPSK	1	0	22.72	**22.88**	22.76	23.5	0
1.4	QPSK	1	2	22.71	22.79	22.61		
1.4	QPSK	1	5	22.66	22.81	22.72		
1.4	QPSK	3	0	22.68	22.76	22.71		
1.4	QPSK	3	1	22.69	22.78	22.72		
1.4	QPSK	3	2	22.68	22.84	22.71		
1.4	QPSK	6	0	21.68	21.86	21.75	22.5	0-1
1.4	16QAM	1	0	21.75	22.04	21.93	22.5	0-1
1.4	16QAM	1	2	21.55	21.76	21.77		
1.4	16QAM	1	5	21.73	21.50	21.67		
1.4	16QAM	3	0	21.63	21.74	21.65		
1.4	16QAM	3	1	21.72	21.74	21.79		
1.4	16QAM	3	2	21.66	21.83	21.78		
1.4	16QAM	6	0	20.68	20.64	20.52	21.5	0-2

<LTE Band 2>

BW [MHz]	Modulation	RB Size	RB Offset	Power Low Ch. / Freq.	Power Middle Ch. / Freq.	Power High Ch. / Freq.	Tune up Limit (dBm)	MPR (dB)
Channel				18700	18900	19100		
Frequency (MHz)				1860	1880	1900		
20	QPSK	1	0	23.02	22.94	23.08	23.5	0
20	QPSK	1	49	22.98	22.87	22.84		
20	QPSK	1	99	22.75	22.78	22.76		
20	QPSK	50	0	22.07	22.04	22.09	22.5	0-1
20	QPSK	50	24	21.96	22.03	22.07		
20	QPSK	50	49	21.92	22.03	22.14		
20	QPSK	100	0	21.97	21.97	22.06		
20	16QAM	1	0	21.83	22.15	22.22	22.5	0-1
20	16QAM	1	49	21.75	21.92	21.60		
20	16QAM	1	99	21.81	22.10	22.20		
20	16QAM	50	0	20.98	20.79	20.93	21.5	0-2
20	16QAM	50	24	20.85	21.02	21.02		
20	16QAM	50	49	20.89	20.87	21.06		
20	16QAM	100	0	20.95	20.95	21.07		
Channel				18675	18900	19125	Tune up Limit (dBm)	MPR (dB)
Frequency (MHz)				1857.5	1880	1902.5		
15	QPSK	1	0	22.97	22.95	22.96	23.5	0
15	QPSK	1	37	22.94	22.88	22.93		
15	QPSK	1	74	22.87	22.92	22.86		
15	QPSK	36	0	21.91	22.01	22.01	22.5	0-1
15	QPSK	36	18	21.82	21.97	21.98		
15	QPSK	36	37	21.96	21.99	22.05		
15	QPSK	75	0	21.97	21.98	22.13		
15	16QAM	1	0	22.08	22.08	22.09	22.5	0-1
15	16QAM	1	37	22.02	21.95	22.01		
15	16QAM	1	74	21.71	21.65	21.79		
15	16QAM	36	0	20.77	20.78	20.94	21.5	0-2
15	16QAM	36	18	20.84	20.87	20.87		
15	16QAM	36	37	20.87	20.85	20.96		
15	16QAM	75	0	20.88	20.98	21.02		
Channel				18650	18900	19150	Tune up Limit (dBm)	MPR (dB)
Frequency (MHz)				1855	1880	1905		
10	QPSK	1	0	22.99	22.84	22.95	23.5	0
10	QPSK	1	24	22.81	22.80	22.90		
10	QPSK	1	49	22.92	22.78	22.80		
10	QPSK	25	0	21.90	21.88	21.96	22.5	0-1
10	QPSK	25	12	21.84	21.92	21.99		
10	QPSK	25	24	21.83	21.89	22.07		
10	QPSK	50	0	21.96	22.01	22.17		
10	16QAM	1	0	22.02	21.88	22.33	22.5	0-1
10	16QAM	1	24	21.73	21.82	22.18		
10	16QAM	1	49	21.77	21.80	21.50		
10	16QAM	25	0	21.01	20.79	20.99	21.5	0-2
10	16QAM	25	12	20.85	20.89	20.98		
10	16QAM	25	24	20.85	20.98	20.89		
10	16QAM	50	0	20.95	20.94	21.01		

Channel				18625	18900	19175	Tune up Limit (dBm)	MPR (dB)
Frequency (MHz)				1852.5	1880	1907.5		
5	QPSK	1	0	22.97	23.00	22.86	23.5	0
5	QPSK	1	12	22.85	22.94	22.79		
5	QPSK	1	24	22.91	22.79	22.83		
5	QPSK	12	0	22.00	21.87	22.08	22.5	0-1
5	QPSK	12	6	22.04	21.96	21.87		
5	QPSK	12	11	22.01	21.87	21.84		
5	QPSK	25	0	21.94	21.89	21.88		
5	16QAM	1	0	21.80	21.89	22.33	22.5	0-1
5	16QAM	1	12	21.77	21.82	22.11		
5	16QAM	1	24	21.74	21.65	22.19		
5	16QAM	12	0	20.90	20.91	21.00	21.5	0-2
5	16QAM	12	6	20.98	21.03	20.90		
5	16QAM	12	11	21.07	20.91	20.89		
5	16QAM	25	0	20.92	20.95	20.86		
Channel				18615	18900	19185	Tune up Limit (dBm)	MPR (dB)
Frequency (MHz)				1851.5	1880	1908.5		
3	QPSK	1	0	23.04	22.96	22.85	23.5	0
3	QPSK	1	7	22.95	22.86	22.75		
3	QPSK	1	14	22.98	22.85	22.74		
3	QPSK	8	0	22.03	21.91	21.83	22.5	0-1
3	QPSK	8	4	22.02	21.95	21.81		
3	QPSK	8	7	22.03	21.97	21.81		
3	QPSK	15	0	22.07	21.90	21.80		
3	16QAM	1	0	22.19	22.14	22.10	22.5	0-1
3	16QAM	1	7	22.16	21.68	22.00		
3	16QAM	1	14	22.02	21.56	22.14		
3	16QAM	8	0	20.98	20.89	20.93	21.5	0-2
3	16QAM	8	4	20.84	20.78	20.82		
3	16QAM	8	7	21.06	20.86	20.79		
3	16QAM	15	0	20.94	20.79	20.78		
Channel				18607	18900	19193	Tune up Limit (dBm)	MPR (dB)
Frequency (MHz)				1850.7	1880	1909.3		
1.4	QPSK	1	0	23.03	22.97	22.74	23.5	0
1.4	QPSK	1	2	22.93	22.91	22.72		
1.4	QPSK	1	5	23.00	22.93	22.63		
1.4	QPSK	3	0	22.98	22.92	22.73		
1.4	QPSK	3	1	23.00	22.93	22.69		
1.4	QPSK	3	2	22.96	22.90	22.71		
1.4	QPSK	6	0	22.04	21.94	21.74	22.5	0-1
1.4	16QAM	1	0	22.13	22.01	21.84	22.5	0-1
1.4	16QAM	1	2	22.11	21.73	21.74		
1.4	16QAM	1	5	21.70	22.00	21.57		
1.4	16QAM	3	0	21.95	21.98	21.76		
1.4	16QAM	3	1	22.07	21.95	21.74		
1.4	16QAM	3	2	22.09	21.73	21.83		
1.4	16QAM	6	0	20.89	20.72	20.81	21.5	0-2

LTE Carrier Aggregation Conducted Power

Note:

1. According to KDB941225 D05A v01, Uplink maximum output power measurement with downlink carrier aggregation active should be measured, using the highest output channel measured without downlink carrier aggregation, to confirm that uplink maximum output power with downlink carrier aggregation active remains within the specified tune-up tolerance limits and not more than ¼ dB higher than the maximum output measured without downlink carrier aggregation active.
2. Uplink maximum output power with downlink carrier aggregation active does not show more than ¼ dB higher than the maximum output power without downlink carrier aggregation active, therefore SAR evaluation with downlink carrier aggregation active can be excluded.

LTE Band 2 with LTE Band17

Frequency (MHz)	Uplink Channel Number	BW(MHz)	RB Size	RB Offset	Mod	Without CA	With CA 2A+17A 5MHz+5MHz	With CA 2A+17A 5MHz+10MHz
						Average Power (dBm)	Average Power (dBm)	Average Power (dBm)
1852.5	18625	5	1	0	QPSK	22.97	22.88	22.87
1852.5	18625	5	1	12		22.85	22.85	22.84
1852.5	18625	5	1	24		22.91	22.95	22.94
1852.5	18625	5	1	0	16QAM	21.80	21.79	21.81
1852.5	18625	5	1	12		21.77	21.76	21.73
1852.5	18625	5	1	24		21.74	21.70	21.71
1880	18900	5	1	0	QPSK	23.00	23.01	22.98
1880	18900	5	1	12		22.94	23.00	22.95
1880	18900	5	1	24		22.79	22.78	22.75
1880	18900	5	1	0	16QAM	21.89	21.85	21.88
1880	18900	5	1	12		21.82	21.80	21.81
1880	18900	5	1	24		21.65	21.60	21.62
1907.5	19175	5	1	0	QPSK	22.86	22.87	22.88
1907.5	19175	5	1	12		22.79	22.76	22.77
1907.5	19175	5	1	24		22.83	22.85	22.86
1907.5	19175	5	1	0	16QAM	22.33	22.31	22.33
1907.5	19175	5	1	12		22.11	22.05	22.06
1907.5	19175	5	1	24		22.19	22.15	22.17

Frequency (MHz)	Uplink Channel Number	BW(MHz)	RB Size	RB Offset	Mod	Without CA	With CA 2A+17A 10MHz+5MHz	With CA 2A+17A 10MHz+10MHz
						Average Power (dBm)	Average Power (dBm)	Average Power (dBm)
1855	18650	10	1	0	QPSK	22.99	23.01	22.98
1855	18650	10	1	24		22.81	22.83	22.78
1855	18650	10	1	49		22.92	22.93	22.95
1855	18650	10	1	0	16QAM	22.02	22.04	22.05
1855	18650	10	1	24		21.73	21.70	21.75
1855	18650	10	1	49		21.77	21.76	21.78
1880	18900	10	1	0	QPSK	22.84	22.83	22.85
1880	18900	10	1	24		22.80	22.78	22.76
1880	18900	10	1	49		22.78	22.73	22.72
1880	18900	10	1	0	16QAM	21.88	21.83	21.86
1880	18900	10	1	24		21.82	21.78	21.76
1880	18900	10	1	49		21.80	21.76	21.77
1905	19150	10	1	0	QPSK	22.95	22.92	22.93
1905	19150	10	1	24		22.90	22.88	22.85
1905	19150	10	1	49		22.80	22.81	22.83
1905	19150	10	1	0	16QAM	22.33	22.29	22.27
1905	19150	10	1	24		22.18	22.11	22.13
1905	19150	10	1	49		21.50	21.43	21.45

LTE Band 2 with LTE Band 29

Frequency (MHz)	Uplink Channel Number	BW(MHz)	RB Size	RB Offset	Mod	Without CA	With CA 2A+29A 5MHz+5MHz	With CA 2A+29A 5MHz+10MHz
						Average Power (dBm)	Average Power (dBm)	Average Power (dBm)
1852.5	18625	5	1	0	QPSK	22.97	22.93	22.94
1852.5	18625	5	1	12		22.85	22.81	22.83
1852.5	18625	5	1	24		22.91	22.93	22.94
1852.5	18625	5	1	0	16QAM	21.80	21.82	21.80
1852.5	18625	5	1	12		21.77	21.73	21.72
1852.5	18625	5	1	24		21.74	21.72	21.70
1880	18900	5	1	0	QPSK	23.00	22.94	22.96
1880	18900	5	1	12		22.94	22.89	22.88
1880	18900	5	1	24		22.79	22.74	22.75
1880	18900	5	1	0	16QAM	21.89	21.83	21.85
1880	18900	5	1	12		21.82	21.77	21.74
1880	18900	5	1	24		21.65	21.60	21.63
1907.5	19175	5	1	0	QPSK	22.86	22.81	22.78
1907.5	19175	5	1	12		22.79	22.73	22.72
1907.5	19175	5	1	24		22.83	22.78	22.85
1907.5	19175	5	1	0	16QAM	22.33	22.30	22.35
1907.5	19175	5	1	12		22.11	22.07	22.13
1907.5	19175	5	1	24		22.19	22.17	22.16

Frequency (MHz)	Uplink Channel Number	BW(MHz)	RB Size	RB Offset	Mod	Without CA	With CA 2A+29A 10MHz+5MHz	With CA 2A+29A 10MHz+10MHz
						Average Power (dBm)	Average Power (dBm)	Average Power (dBm)
1855	18650	10	1	0	QPSK	22.99	22.94	22.96
1855	18650	10	1	24		22.81	22.78	22.84
1855	18650	10	1	49		22.92	22.88	22.96
1855	18650	10	1	0	16QAM	22.02	21.98	22.05
1855	18650	10	1	24		21.73	21.69	21.75
1855	18650	10	1	49		21.77	21.74	21.78
1880	18900	10	1	0	QPSK	22.84	22.83	22.86
1880	18900	10	1	24		22.80	22.78	22.83
1880	18900	10	1	49		22.78	22.73	22.81
1880	18900	10	1	0	16QAM	21.88	21.84	21.92
1880	18900	10	1	24		21.82	21.76	21.86
1880	18900	10	1	49		21.80	21.81	21.85
1905	19150	10	1	0	QPSK	22.95	22.91	22.96
1905	19150	10	1	24		22.90	22.87	22.85
1905	19150	10	1	49		22.80	22.78	22.74
1905	19150	10	1	0	16QAM	22.33	22.31	22.35
1905	19150	10	1	24		22.18	22.17	22.21
1905	19150	10	1	49		21.50	21.45	21.52

LTE Band 4 with LTE Band17

Frequency (MHz)	Uplink Channel Number	BW(MHz)	RB Size	RB Offset	Mod	Without CA	With CA 4A+17A 5MHz+5MHz	With CA 4A+17A 5MHz+10MHz
						Average Power (dBm)	Average Power (dBm)	Average Power (dBm)
1712.5	19975	5	1	0	QPSK	22.66	22.63	22.67
1712.5	19975	5	1	12		22.64	22.63	22.66
1712.5	19975	5	1	24		22.60	22.63	22.64
1712.5	19975	5	1	0	16QAM	21.83	21.78	21.86
1712.5	19975	5	1	12		21.80	21.78	21.82
1712.5	19975	5	1	24		21.30	21.31	21.26
1732.5	20175	5	1	0	QPSK	22.71	22.67	22.73
1732.5	20175	5	1	12		22.67	22.63	22.65
1732.5	20175	5	1	24		22.69	22.71	22.68
1732.5	20175	5	1	0	16QAM	22.01	22.02	22.03
1732.5	20175	5	1	12		21.59	21.53	21.61
1732.5	20175	5	1	24		21.74	21.72	21.75
1752.5	20375	5	1	0	QPSK	22.75	22.71	22.73
1752.5	20375	5	1	12		22.69	22.67	22.64
1752.5	20375	5	1	24		22.70	22.66	22.69
1752.5	20375	5	1	0	16QAM	21.62	21.58	21.60
1752.5	20375	5	1	12		21.49	21.46	21.47
1752.5	20375	5	1	24		21.51	21.48	21.53

Frequency (MHz)	Uplink Channel Number	BW(MHz)	RB Size	RB Offset	Mod	Without CA	With CA 4A+17A 10MHz+5MHz	With CA 4A+17A 10MHz+10MHz
						Average Power (dBm)	Average Power (dBm)	Average Power (dBm)
1715	20000	10	1	0	QPSK	22.71	22.67	22.69
1715	20000	10	1	24		22.62	22.59	22.61
1715	20000	10	1	49		22.67	22.61	22.63
1715	20000	10	1	0	16QAM	21.63	21.64	21.62
1715	20000	10	1	24		21.55	21.59	21.58
1715	20000	10	1	49		21.13	21.11	21.16
1732.5	20175	10	1	0	QPSK	22.82	22.79	22.81
1732.5	20175	10	1	24		22.80	22.85	22.82
1732.5	20175	10	1	49		22.79	22.74	22.76
1732.5	20175	10	1	0	16QAM	22.02	22.04	22.05
1732.5	20175	10	1	24		21.80	21.78	21.74
1732.5	20175	10	1	49		21.77	21.79	21.76
1750	20350	10	1	0	QPSK	22.77	22.75	22.72
1750	20350	10	1	24		22.70	22.69	22.72
1750	20350	10	1	49		22.59	22.56	22.61
1750	20350	10	1	0	16QAM	21.95	21.97	21.98
1750	20350	10	1	24		21.51	21.45	21.47
1750	20350	10	1	49		21.48	21.47	21.51

LTE Band 4 with LTE Band 29

Frequency (MHz)	Uplink Channel Number	BW(MHz)	RB Size	RB Offset	Mod	Without CA	With CA 4A+29A 5MHz+5MHz	With CA 4A+29A 5MHz+10MHz
						Average Power (dBm)	Average Power (dBm)	Average Power (dBm)
1712.5	19975	5	1	0	QPSK	22.66	22.64	22.67
1712.5	19975	5	1	12		22.64	22.68	22.67
1712.5	19975	5	1	24		22.60	22.61	22.63
1712.5	19975	5	1	0	16QAM	21.83	21.85	21.81
1712.5	19975	5	1	12		21.80	21.82	21.83
1712.5	19975	5	1	24		21.30	21.26	21.24
1732.5	20175	5	1	0	QPSK	22.71	22.73	22.68
1732.5	20175	5	1	12		22.67	22.64	22.64
1732.5	20175	5	1	24		22.69	22.65	22.66
1732.5	20175	5	1	0	16QAM	22.01	22.03	22.05
1732.5	20175	5	1	12		21.59	21.57	21.53
1732.5	20175	5	1	24		21.74	21.73	21.74
1752.5	20375	5	1	0	QPSK	22.75	22.70	22.71
1752.5	20375	5	1	12		22.69	22.61	22.63
1752.5	20375	5	1	24		22.70	22.66	22.62
1752.5	20375	5	1	0	16QAM	21.62	21.56	21.57
1752.5	20375	5	1	12		21.49	21.46	21.49
1752.5	20375	5	1	24		21.51	21.52	21.54

Frequency (MHz)	Uplink Channel Number	BW(MHz)	RB Size	RB Offset	Mod	Without CA	With CA 4A+29A 10MHz+5MHz	With CA 4A+29A 10MHz+10MHz
						Average Power (dBm)	Average Power (dBm)	Average Power (dBm)
1715	20000	10	1	0	QPSK	22.71	22.67	22.69
1715	20000	10	1	24		22.62	22.64	22.66
1715	20000	10	1	49		22.67	22.64	22.62
1715	20000	10	1	0	16QAM	21.63	21.57	21.56
1715	20000	10	1	24		21.55	21.47	21.45
1715	20000	10	1	49		21.13	21.18	21.14
1732.5	20175	10	1	0	QPSK	22.82	22.75	22.77
1732.5	20175	10	1	24		22.80	22.76	22.74
1732.5	20175	10	1	49		22.79	22.74	22.75
1732.5	20175	10	1	0	16QAM	22.02	21.97	21.95
1732.5	20175	10	1	24		21.80	21.78	21.82
1732.5	20175	10	1	49		21.77	21.78	21.74
1750	20350	10	1	0	QPSK	22.77	22.74	22.73
1750	20350	10	1	24		22.70	22.68	22.73
1750	20350	10	1	49		22.59	22.59	22.57
1750	20350	10	1	0	16QAM	21.95	21.98	21.94
1750	20350	10	1	24		21.51	21.48	21.45
1750	20350	10	1	49		21.48	21.44	21.47

LTE Band 17 with LTE Band 2

Frequency (MHz)	Uplink Channel Number	BW(MHz)	RB Size	RB Offset	Mod	Without CA	With CA 17A+2A 5MHz+5MHz	With CA 17A+2A 5MHz+10MHz
						Average Power (dBm)	Average Power (dBm)	Average Power (dBm)
706.5	23755	5	1	0	QPSK	22.63	22.62	22.64
706.5	23755	5	1	12		22.82	22.78	22.76
706.5	23755	5	1	24		22.87	22.88	22.89
706.5	23755	5	1	0	16QAM	21.68	21.64	21.62
706.5	23755	5	1	12		21.70	21.67	21.63
706.5	23755	5	1	24		21.72	21.65	21.68
710	23790	5	1	0	QPSK	22.74	22.71	22.70
710	23790	5	1	12		22.89	22.88	22.83
710	23790	5	1	24		22.93	22.91	22.90
710	23790	5	1	0	16QAM	21.51	21.48	21.45
710	23790	5	1	12		21.96	21.94	21.98
710	23790	5	1	24		22.02	22.04	22.03
713.5	23825	5	1	0	QPSK	22.85	22.77	22.81
713.5	23825	5	1	12		22.95	22.96	22.93
713.5	23825	5	1	24		23.08	23.03	23.01
713.5	23825	5	1	0	16QAM	21.63	21.58	21.56
713.5	23825	5	1	12		21.73	21.75	21.74
713.5	23825	5	1	24		21.78	21.71	21.72

Frequency (MHz)	Uplink Channel Number	BW(MHz)	RB Size	RB Offset	Mod	Without CA	With CA 17A+2A 10MHz+5MHz	With CA 17A+2A 10MHz+10MHz
						Average Power (dBm)	Average Power (dBm)	Average Power (dBm)
709	23780	10	1	0	QPSK	22.71	22.68	22.66
709	23780	10	1	24		22.74	22.71	22.77
709	23780	10	1	49		22.89	22.88	22.86
709	23780	10	1	0	16QAM	21.87	21.84	21.83
709	23780	10	1	24		21.69	21.61	21.66
709	23780	10	1	49		21.94	21.93	21.90
710	23790	10	1	0	QPSK	22.69	22.61	22.62
710	23790	10	1	24		22.92	22.88	22.84
710	23790	10	1	49		23.07	23.02	23.05
710	23790	10	1	0	16QAM	21.48	21.44	21.46
710	23790	10	1	24		21.62	21.58	21.59
710	23790	10	1	49		21.82	21.80	21.81
711	23800	10	1	0	QPSK	22.82	22.75	22.77
711	23800	10	1	24		22.95	22.90	22.89
711	23800	10	1	49		23.16	23.11	23.10
711	23800	10	1	0	16QAM	22.05	22.01	22.03
711	23800	10	1	24		21.98	21.92	21.94
711	23800	10	1	49		22.12	22.05	22.01

<WLAN Conducted Power>

General Note:

1. Per KDB 248227, SAR for MIMO was measured with both transmitting simultaneously and was evaluated in dependently of SISO operation.
2. For 2.4GHz SISO WLAN SAR testing, highest average RF output power channel for the lowest data rate for 802.11b were selected for SAR evaluation. 802.11g/n HT20/HT40 were not investigated since the average output powers over all channels and data rates were not more than 0.25 dB higher than the tested channel in the lowest data rate of 802.11b mode.
3. For 2.4 GHz MIMO, 802.11n-HT20MHz was evaluated, 802.11n-HT40 maximum power not more than 0.25 dB higher than 802.11n-HT20MHz, so SAR can be excluded.
4. For 5.2 GHz SISO WLAN SAR testing, 802.11a/n -HT20/HT40 SAR test can be excluded , only 802.11MIMO n-HT20 was selected for WLAN 5.2G SAR evaluation.
5. For 5.2GHz MIMO SAR testing, 802.11an-HT20MHz were evaluated, 802.11n-HT40 verified the worst position of n-HT20, for 802.11n-HT40 maximum power is more than 0.25 dB higher than 802.11n-HT20.
6. For 5.8 GHz SISO WLAN SAR testing, highest average RF output power channel for the lowest data rate for 802.11a (antenna 1)were selected for SAR evaluation. 802.11n HT20/HT40 modes were not investigated since the average output powers over all channels and data rates were not more than 0.25 dB higher than the tested channel in the lowest data rate of 802.11a mode.
7. For 5.8 GHz MIMO WLAN SAR testing, 802.11an-HT20MHz were evaluated, 802.11n-HT40 SAR can be excluded for maximum power is not more than 0.25 dB higher than 802.11n-HT20.

<WLAN 2.4GHz>

WLAN 2.4GHz 802.11b Average Power (dBm)								Tune up Limit (dBm)
Power vs. Channel				Power vs. Data Rate				
Channel	Frequency (MHz)	Chain Port	Data Rate 1Mbps	Channel	2Mbps	5.5Mbps	11Mbps	
CH 01	2412	0	13.47	CH 06	13.91	14.11	14.08	14.5
CH 06	2437	0	**14.15**					
CH 11	2462	0	13.74					
CH 01	2412	1	13.56	CH 06	14.60	14.64	14.65	15.0
CH 06	2437	1	**14.67**					
CH 11	2462	1	14.28					

WLAN 2.4GHz 802.11g Average Power (dBm)												Tune up Limit (dBm)
Power vs. Channel				Power vs. Data Rate								
Channel	Frequency (MHz)	Chain Port	Data Rate 6Mbps	Channel	9Mbps	12Mbps	18Mbps	24Mbps	36Mbps	48Mbps	54Mbps	
CH 01	2412	0	10.43	CH 06	12.55	12.57	12.51	12.54	12.49	12.52	12.44	11.0
CH 06	2437	0	**12.85**									13.0
CH 11	2462	0	10.86									11.0
CH 01	2412	1	10.76	CH 06	12.99	12.97	12.90	12.95	12.97	13.08	12.93	11.0
CH 06	2437	1	**13.51**									14.0
CH 11	2462	1	11.46									12.0

WLAN 2.4GHz 802.11n HT20 Average Power (dBm)													Tune up Limit (dBm)
Power vs. Channel				Power vs. MCS Index									
Channel	Frequency (MHz)	Chain Port	MCS Index MCS0	Channel	MCS1	MCS2	MCS3	MCS4	MCS5	MCS6	MCS7		
CH 01	2412	0	11.57	CH 11	12.09	12.13	12.08	12.12	11.92	12.09	12.14		12.5
CH 06	2437	0	12.09										
CH 11	2462	0	**12.16**										
CH 01	2412	1	10.95	CH 11	12.10	11.96	11.95	11.91	12.13	12.15	12.06		12.0
CH 06	2437	1	11.66										12.0
CH 11	2462	1	**12.19**										12.5
Channel	Frequency (MHz)	Chain Port	MCS Index MCS8	Channel	MCS9	MCS10	MCS11	MCS12	MCS13	MCS14	MCS15		Tune up Limit (dBm)
CH 01	2412	0+1(0)	8.68	CH 11	8.96	9.06	8.88	**9.13**	8.81	8.85	8.95		9.5
CH 06	2437	0+1(0)	8.94										
CH 11	2462	0+1(0)	9.11										
CH 01	2412	0+1(1)	8.97	CH 11	9.86	9.85	9.76	9.81	9.92	**9.97**	9.88		10.0
CH 06	2437	0+1(1)	9.46										
CH 11	2462	0+1(1)	9.86										
CH 01	2412	0+1	11.84	CH 11	12.45	12.48	12.35	12.49	12.41	12.46	12.45		13.0
CH 06	2437	0+1	12.22										
CH 11	2462	0+1	**12.51**										

WLAN 2.4GHz 802.11n HT40 Average Power (dBm)													Tune up Limit (dBm)
Power vs. Channel				Power vs. MCS Index									
Channel	Frequency (MHz)	Chain Port	MCS Index MCS0	Channel	MCS1	MCS2	MCS3	MCS4	MCS5	MCS6	MCS7		
CH 03	2422	0	11.42	CH 09	12.08	12.12	12.12	12.17	12.18	12.14	12.11		12.5
CH 06	2437	0	11.75										
CH 09	2452	0	**12.19**										
CH 03	2422	1	11.12	CH 09	11.71	11.69	11.62	11.65	11.57	11.69	11.63		12.0
CH 06	2437	1	11.32										
CH 09	2452	1	**11.75**										
Channel	Frequency (MHz)	Chain Port	MCS Index MCS8	Channel	MCS9	MCS10	MCS11	MCS12	MCS13	MCS14	MCS15		Tune up Limit (dBm)
CH 03	2422	0+1(0)	8.41	CH 09	8.98	9.04	8.95	9.06	9.00	9.15	**9.16**		9.5
CH 06	2437	0+1(0)	8.70										
CH 09	2452	0+1(0)	9.10										
CH 03	2422	0+1(1)	8.33	CH 09	9.60	9.48	**9.63**	9.44	9.60	9.46	9.41		10.0
CH 06	2437	0+1(1)	9.49										
CH 09	2452	0+1(1)	9.53										
CH 03	2422	0+1	11.38	CH 09	12.31	12.28	12.31	12.27	12.32	12.32	12.30		12.5
CH 06	2437	0+1	12.12										
CH 09	2452	0+1	**12.33**										

<5GHz WLAN>

WLAN 5GHz 802.11a Average Power (dBm)												Tune up Limit (dBm)
Power vs. Channel				Power vs. Data Rate								
Channel	Frequency (MHz)	Chain Port	Data Rate 6Mbps	Channel	9Mbps	12Mbps	18Mbps	24Mbps	36Mbps	48Mbps	54Mbps	
CH 36	5180	0	10.48	CH 48	10.26	10.11	10.16	10.21	10.21	10.24	10.26	11.0
CH 40	5200	0	10.45									
CH 44	5220	0	10.49									
CH 48	5240	0	**10.53**									
CH 149	5745	0	9.39	CH 165	9.56	9.57	9.54	9.54	9.47	9.60	9.49	10.0
CH 153	5765	0	9.35									
CH 157	5785	0	9.50									
CH 161	5805	0	9.60									
CH 165	5825	0	**9.64**									
CH 36	5180	1	**10.69**	CH 36	10.60	10.57	10.67	10.66	10.64	10.53	10.63	11.0
CH 40	5200	1	10.49									
CH 44	5220	1	10.27									
CH 48	5240	1	10.01									
CH 149	5745	1	11.06	CH 165	11.36	11.38	11.43	11.44	11.43	11.40	11.42	12.0
CH 153	5765	1	11.21									
CH 157	5785	1	11.35									
CH 161	5805	1	11.36									
CH 165	5825	1	**11.46**									

WLAN 5GHz 802.11n HT20 Average Power (dBm)													Tune up Limit (dBm)
Power vs. Channel				Power vs. MCS Index									
Channel	Frequency (MHz)	Chain Port	MCS Index MCS0	Channel	MCS1	MCS2	MCS3	MCS4	MCS5	MCS6	MCS7		
CH 36	5180	0	**10.40**	CH 36	10.38	10.36	10.24	10.36	10.35	10.34	10.29		10.5
CH 40	5200	0	10.22										
CH 44	5220	0	10.26										
CH 48	5240	0	10.34										
CH 149	5745	0	9.41	CH 165	9.54	9.55	9.47	9.56	9.55	9.40	9.39		10.0
CH 153	5765	0	9.37										
CH 157	5785	0	9.56										
CH 161	5805	0	9.49										
CH 165	5825	0	**9.57**										
CH 36	5180	1	**10.69**	CH 36	10.50	10.25	10.24	10.18	10.38	10.34	10.29		11.0
CH 40	5200	1	10.56										
CH 44	5220	1	10.32										
CH 48	5240	1	10.21										
CH 149	5745	1	10.12	CH 165	10.54	10.51	10.54	10.59	10.58	10.56	10.52		11.0
CH 153	5765	1	10.27										
CH 157	5785	1	10.36										
CH 161	5805	1	10.44										
CH 165	5825	1	**10.61**										
Channel	Frequency (MHz)	Chain Port	MCS Index MCS8	Channel	MCS9	MCS10	MCS11	MCS12	MCS13	MCS14	MCS15		Tune up Limit (dBm)
CH 36	5180	0+1(0)	10.82	CH 36	10.88	10.76	10.81	10.78	10.75	**10.91**	10.87		11.0
CH 40	5200	0+1(0)	10.51										
CH 44	5220	0+1(0)	10.77										
CH 48	5240	0+1(0)	10.58										
CH 149	5745	0+1(0)	10.17	CH 165	10.51	10.50	10.35	10.46	**10.57**	10.48	10.30		11.0
CH 153	5765	0+1(0)	10.14										
CH 157	5785	0+1(0)	10.36										
CH 161	5805	0+1(0)	10.08										
CH 165	5825	0+1(0)	10.45										
CH 36	5180	0+1(1)	**10.92**	CH 36	10.69	10.79	10.74	10.72	10.85	10.65	10.84		11.5
CH 40	5200	0+1(1)	10.47										
CH 44	5220	0+1(1)	10.24										
CH 48	5240	0+1(1)	10.17										
CH 149	5745	0+1(1)	10.23	CH 165	10.39	10.44	10.23	10.24	10.21	10.39	10.11		11.0
CH 153	5765	0+1(1)	10.21										
CH 157	5785	0+1(1)	9.92										
CH 161	5805	0+1(1)	10.06										
CH 165	5825	0+1(1)	**10.52**										
CH 36	5180	0+1	**13.88**	CH 36	13.80	13.79	13.79	13.76	13.81	13.79	13.87		14.0
CH 40	5200	0+1	13.50										
CH 44	5220	0+1	13.52										
CH 48	5240	0+1	13.39										
CH 149	5745	0+1	13.21	CH 165	13.46	13.48	13.30	13.36	13.40	13.44	13.22		14.0
CH 153	5765	0+1	13.19										
CH 157	5785	0+1	13.16										
CH 161	5805	0+1	13.09										
CH 165	5825	0+1	**13.50**										

WLAN 5GHz 802.11n HT40 Average Power (dBm)													Tune up Limit (dBm)
Power vs. Channel				Power vs. MCS Index									
Channel	Frequency (MHz)	Chain Port	MCS Index MCS0	Channel	MCS1	MCS2	MCS3	MCS4	MCS5	MCS6	MCS7		
CH 38	5190	0	**10.18**	CH 38	9.89	10.09	9.69	9.88	9.87	9.90	10.14		10.5
CH 46	5230	0	9.85										
CH 151	5755	0	**9.39**	CH 151	8.89	9.06	9.17	9.31	9.25	9.18	9.31		10.0
CH 159	5795	0	9.04										
CH 38	5190	1	**10.64**	CH 38	10.18	10.35	10.56	10.61	10.57	10.63	10.57		11.0
CH 46	5230	1	10.44										
CH 151	5755	1	11.34	CH 159	11.23	11.17	10.99	11.15	11.37	11.26	11.19		12.0
CH 159	5795	1	**11.39**										
Channel	Frequency (MHz)	Chain Port	MCS Index MCS8	Channel	MCS9	MCS10	MCS11	MCS12	MCS13	MCS14	MCS15		Tune up Limit (dBm)
CH 38	5190	0+1(0)	10.87	CH 46	10.88	10.92	10.85	11.07	**11.12**	10.98	10.80		11.5
CH 46	5230	0+1(0)	11.10										
CH 151	5755	0+1(0)	**8.33**	CH 151	8.01	8.12	8.04	8.11	8.12	7.89	7.53		8.5
CH 159	5795	0+1(0)	8.15										
CH 38	5190	0+1(1)	11.20	CH 46	10.86	10.87	10.84	11.12	11.02	11.15	10.62		11.5
CH 46	5230	0+1(1)	**11.28**										
CH 151	5755	0+1(1)	**8.53**	CH 151	7.95	8.04	7.95	8.04	7.93	7.80	7.39		9.0
CH 159	5795	0+1(1)	8.41										
CH 38	5190	0+1	14.05	CH 46	13.88	13.91	13.85	14.11	14.08	14.08	13.72		14.5
CH 46	5230	0+1	**14.20**										
CH 151	5755	0+1	**11.44**	CH 151	10.99	11.09	11.00	11.09	11.03	10.86	10.47		12.0
CH 159	5795	0+1	11.29										

13. WLAN Exclusions Applied

Mode Band	Average power(dBm)	
	5.2GHz WLAN(antenna 0/1)	5.8G WLAN(antenna 0)
WLAN	11	10

Note:

1. Per KDB 447498 D01v05r02, the 1-g and 10-g SAR test exclusion thresholds for 100 MHz to 6 GHz at *test separation distances* ≤ 50 mm are determined by:
   [(*max. power of channel, including tune-up tolerance, mW*)/(*min. test separation distance, mm*)] ·[√f(GHz)] ≤ 3.0 for 1-g SAR and ≤ 7.5 for 10-g extremity SAR
   - f(GHz) is the RF channel transmit frequency in GHz
   - Power and distance are rounded to the nearest mW and mm before calculation
   - The result is rounded to one decimal place for comparison

WLAN Max Power (dBm)	Separation Distance (mm)	Frequency (GHz)	Exclusion Thresholds
11	10	5.25	3.0
10	10	5.85	2.4

Note:
Per KDB 447498 D01v05r02, for WLAN 5.2GHz, the test exclusion threshold is 3.0 which is <= 3, SAR testing is not required. For WLAN 5.8GHz, the test exclusion threshold is 2.4 which is <= 3, So SAR test for 5.8GHz antenna 0 can be excluded.

14. Antenna Location

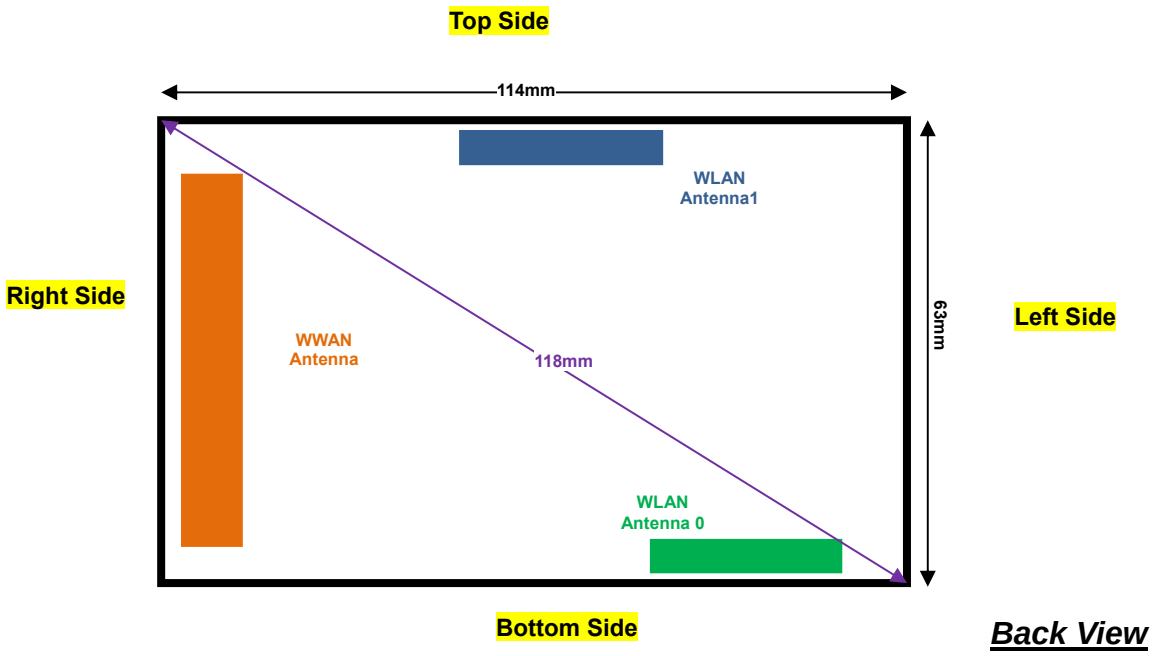

Distance of the Antenna to the EUT surface/edge						
Antennas	Back	Front	Top Side	Bottom Side	Right Side	Left Side
WWAN	≤ 25mm	≤ 25mm	≤ 25mm	≤ 25mm	≤ 25mm	97mm
WLAN(0)	≤ 25mm	≤ 25mm	55mm	≤ 25mm	74mm	≤ 25mm
WLAN(1)	≤ 25mm	≤ 25mm	≤ 25mm	55mm	55mm	39mm

Positions for SAR tests; Hotspot mode						
Antennas	Back	Front	Top Side	Bottom Side	Right Side	Left Side
WWAN	Yes	Yes	Yes	Yes	Yes	No
WLAN(0)	Yes	Yes	No	Yes	No	Yes
WLAN(1)	Yes	Yes	Yes	No	No	No

General Note:

1. This product has three transmitter antenna paths, WWAN Primary Antenna for WCDMA Band 2/5 and LTE Band 2/4/5/17, Antenna 0 for WLAN, WLAN Antenna 1 for WLAN. Each antenna path can transmit simultaneously.
2. Referring to KDB 941225 D06 v01r01, when the overall device length and width are ≥ 9cm*5cm, the test distance is 10 mm. SAR must be measured for all sides and surfaces with a transmitting antenna located within 25mm from that surface or edge.

15. SAR Test Results

General Note:

1. Per KDB 447498 D01v05r02, the reported SAR is the measured SAR value adjusted for maximum tune-up tolerance.
   a. Tune-up scaling Factor = tune-up limit power (mW) / EUT RF power (mW), where tune-up limit is the maximum rated power among all production units.
   b. For SAR testing of WLAN signal with non-100% duty cycle, the measured SAR is scaled-up by the duty cycle scaling factor which is equal to "1/(duty cycle)"
   c. Reported SAR(W/kg)= Measured SAR(W/kg)* Duty Cycle scaling factor * Tune-up scaling factor
2. Per KDB 447498 D01v05r02, for each exposure position, testing of other required channels within the operating mode of a frequency band is not required when the *reported* 1-g or 10-g SAR for the mid-band or highest output power channel is:
   - ≤ 0.8 W/kg or 2.0 W/kg, for 1-g or 10-g respectively, when the transmission band is ≤ 100 MHz
   - ≤ 0.6 W/kg or 1.5 W/kg, for 1-g or 10-g respectively, when the transmission band is between 100 MHz and 200 MHz
   - ≤ 0.4 W/kg or 1.0 W/kg, for 1-g or 10-g respectively, when the transmission band is ≥ 200 MHz
3. Per KDB 941225 D02v02r02, RMC 12.2kbps setting is used to evaluate SAR. If HSDPA/HSUPA/DC-HSDPA output power is < 0.25dB higher than RMC, or reported SAR with RMC 12.2kbps setting is ≤ 1.2W/kg, HSDPA/HSUPA/DC-HSDPA SAR evaluation can be excluded..
4. Per KDB 941225 D05v02r03, start with the largest channel bandwidth and measure SAR for QPSK with 1 RB allocation, using the RB offset and required test channel combination with the highest maximum output power for RB offsets at the upper edge, middle and lower edge of each required test channel.
5. Per KDB 941225 D05v02r03, 50% RB allocation for QPSK SAR testing follows 1RB QPSK allocation procedure.
6. Per KDB 941225 D05v02r03, For QPSK with 100% RB allocation, SAR is not required when the highest maximum output power for 100 % RB allocation is less than the highest maximum output power in 50% and 1 RB allocations and the highest reported SAR for 1 RB and 50% RB allocation are ≤ 0.8 W/kg. Otherwise, SAR is measured for the highest output power channel; and if the reported SAR is > 1.45 W/kg, the remaining required test channels must also be tested.
7. Per KDB 941225 D05v02r03, 16QAM output power for each RB allocation configuration is > not ½ dB higher than the same configuration in QPSK and the reported SAR for the QPSK configuration is ≤ 1.45 W/kg; Per KDB 941225 D05v02r03, 16QAM SAR testing is not required.
8. Per KDB 941225 D05v02r03, Smaller bandwidth output power for each RB allocation configuration is > not ½ dB higher than the same configuration in the largest supported bandwidth, and the reported SAR for the largest supported bandwidth is ≤ 1.45 W/kg; Per KDB 941225 D05v02r03, smaller bandwidth SAR testing is not required.
9. This device 2.4GHz WLAN supports Hotspot operation, 5.8GHz WLAN supports WiFi Direct (Group Client / Group Owner), and 5.2GHz supports WiFi Direct (Group Client only).

15.1 Body SAR

<WCDMA SAR>

Plot No.	Band	Mode	Test Position	Gap (cm)	Ch.	Freq. (MHz)	Average Power (dBm)	Tune-Up Limit (dBm)	Tune-up Scaling Factor	Power Drift (dB)	Measured 1g SAR (W/kg)	Reported 1g SAR (W/kg)
	WCDMA Band V	RMC 12.2K	Front	1	4233	846.6	23.25	24.00	1.189	-0.08	0.538	0.639
#01	WCDMA Band V	RMC 12.2K	Back	1	4233	846.6	23.25	24.00	1.189	-0.06	0.572	**0.680**
	WCDMA Band V	RMC 12.2K	Right side	1	4233	846.6	23.25	24.00	1.189	0.04	0.054	0.064
	WCDMA Band V	RMC 12.2K	Top side	1	4233	846.6	23.25	24.00	1.189	-0.01	0.318	0.378
	WCDMA Band V	RMC 12.2K	Bottom side	1	4233	846.6	23.25	24.00	1.189	-0.05	0.327	0.389
	WCDMA Band II	RMC 12.2Kbps	Front	1	9262	1852.4	22.76	23.50	1.186	-0.03	0.781	0.926
	WCDMA Band II	RMC 12.2Kbps	Back	1	9262	1852.4	22.76	23.50	1.186	-0.03	0.773	0.917
	WCDMA Band II	RMC 12.2Kbps	Right side	1	9262	1852.4	22.76	23.50	1.186	-0.01	0.420	0.498
	WCDMA Band II	RMC 12.2Kbps	Top side	1	9262	1852.4	22.76	23.50	1.186	-0.04	0.208	0.247
	WCDMA Band II	RMC 12.2Kbps	Bottom side	1	9262	1852.4	22.76	23.50	1.186	-0.06	0.255	0.302
#02	WCDMA Band II	RMC 12.2Kbps	Front	1	9400	1880	22.67	23.50	1.211	-0.03	0.776	**0.939**
	WCDMA Band II	RMC 12.2Kbps	Front	1	9538	1907.6	22.59	23.50	1.233	-0.02	0.748	0.922
	WCDMA Band II	RMC 12.2Kbps	Back	1	9400	1880	22.67	23.50	1.211	-0.02	0.739	0.895
	WCDMA Band II	RMC 12.2Kbps	Back	1	9538	1907.6	22.59	23.50	1.233	-0.03	0.751	0.926

<LTE SAR>

Plot No.	Band	BW (MHz)	RB Size	RB offest	Modulation	Test Position	Gap (cm)	Ch.	Freq. (MHz)	Average Power (dBm)	Tune-Up Limit (dBm)	Tune-up Scaling Factor	Power Drift (dB)	Measured 1g SAR (W/kg)	Reported 1g SAR (W/kg)
#03	LTE Band 17	10	1	49	QPSK	Front	1	23800	711	23.16	23.50	1.081	-0.05	0.328	**0.355**
	LTE Band 17	10	1	49	QPSK	Back	1	23800	711	23.16	23.50	1.081	-0.07	0.318	0.344
	LTE Band 17	10	1	49	QPSK	Right side	1	23800	711	23.16	23.50	1.081	-0.02	0.044	0.048
	LTE Band 17	10	1	49	QPSK	Top side	1	23800	711	23.16	23.50	1.081	-0.07	0.135	0.146
	LTE Band 17	10	1	49	QPSK	Bottom side	1	23800	711	23.16	23.50	1.081	-0.01	0.131	0.142
	LTE Band 17	10	25	24	QPSK	Front	1	23800	711	21.99	22.50	1.125	-0.01	0.256	0.288
	LTE Band 17	10	25	24	QPSK	Back	1	23800	711	21.99	22.50	1.125	-0.06	0.244	0.274
	LTE Band 17	10	25	24	QPSK	Right side	1	23800	711	21.99	22.50	1.125	-0.04	0.030	0.034
	LTE Band 17	10	25	24	QPSK	Top side	1	23800	711	21.99	22.50	1.125	-0.04	0.113	0.127
	LTE Band 17	10	25	24	QPSK	Bottom side	1	23800	711	21.99	22.50	1.125	-0.04	0.106	0.119
	LTE Band 5	10	1	0	QPSK	Front	1	20450	829	22.85	24.00	1.303	-0.06	0.513	0.669
#04	LTE Band 5	10	1	0	QPSK	Back	1	20450	829	22.85	24.00	1.303	-0.03	0.547	**0.713**
	LTE Band 5	10	1	0	QPSK	Right side	1	20450	829	22.85	24.00	1.303	-0.01	0.046	0.060
	LTE Band 5	10	1	0	QPSK	Top side	1	20450	829	22.85	24.00	1.303	-0.04	0.325	0.424
	LTE Band 5	10	1	0	QPSK	Bottom side	1	20450	829	22.85	24.00	1.303	-0.03	0.317	0.413
	LTE Band 5	10	25	0	QPSK	Front	1	20450	829	21.89	23.00	1.291	-0.06	0.450	0.581
	LTE Band 5	10	25	0	QPSK	Back	1	20450	829	21.89	23.00	1.291	-0.02	0.479	0.618
	LTE Band 5	10	25	0	QPSK	Right side	1	20450	829	21.89	23.00	1.291	-0.06	0.037	0.048
	LTE Band 5	10	25	0	QPSK	Top side	1	20450	829	21.89	23.00	1.291	-0.03	0.286	0.369
	LTE Band 5	10	25	0	QPSK	Bottom side	1	20450	829	21.89	23.00	1.291	-0.05	0.269	0.347

Plot No.	Band	BW (MHz)	RB Size	RB offest	Modulation	Test Position	Gap (cm)	Ch.	Freq. (MHz)	Average Power (dBm)	Tune-Up Limit (dBm)	Tune-up Scaling Factor	Power Drift (dB)	Measured 1g SAR (W/kg)	Reported 1g SAR (W/kg)
#05	LTE Band 4	20	1	0	QPSK	Front	1	20300	1745	22.81	23.50	1.172	-0.05	0.798	**0.935**
	LTE Band 4	20	1	0	QPSK	Back	1	20300	1745	22.81	23.50	1.172	-0.07	0.788	0.924
	LTE Band 4	20	1	0	QPSK	Right side	1	20300	1745	22.81	23.50	1.172	-0.03	0.394	0.462
	LTE Band 4	20	1	0	QPSK	Top side	1	20300	1745	22.81	23.50	1.172	-0.03	0.272	0.319
	LTE Band 4	20	1	0	QPSK	Bottom side	1	20300	1745	22.81	23.50	1.172	-0.03	0.377	0.442
	LTE Band 4	20	1	0	QPSK	Front	1	20050	1720	22.79	23.50	1.178	-0.02	0.739	0.870
	LTE Band 4	20	1	0	QPSK	Front	1	20175	1732.5	22.79	23.50	1.178	-0.08	0.765	0.901
	LTE Band 4	20	1	0	QPSK	Back	1	20050	1720	22.79	23.50	1.178	-0.05	0.739	0.870
	LTE Band 4	20	1	0	QPSK	Back	1	20175	1732.5	22.79	23.50	1.178	-0.05	0.761	0.896
	LTE Band 4	20	50	0	QPSK	Front	1	20175	1732.5	21.99	22.50	1.125	-0.04	0.628	0.706
	LTE Band 4	20	50	0	QPSK	Back	1	20175	1732.5	21.99	22.50	1.125	-0.03	0.645	0.725
	LTE Band 4	20	50	0	QPSK	Right side	1	20175	1732.5	21.99	22.50	1.125	-0.09	0.323	0.363
	LTE Band 4	20	50	0	QPSK	Top side	1	20175	1732.5	21.99	22.50	1.125	-0.16	0.223	0.251
	LTE Band 4	20	50	0	QPSK	Bottom side	1	20175	1732.5	21.99	22.50	1.125	-0.04	0.310	0.349
	LTE Band 4	20	100	0	QPSK	Front	1	20050	1720	21.86	22.50	1.159	-0.07	0.610	0.707
	LTE Band 4	20	100	0	QPSK	Back	1	20050	1720	21.86	22.50	1.159	-0.04	0.624	0.723
	LTE Band 4	20	100	0	QPSK	Right side	1	20050	1720	21.86	22.50	1.159	-0.04	0.312	0.362
	LTE Band 4	20	100	0	QPSK	Top side	1	20050	1720	21.86	22.50	1.159	-0.09	0.219	0.254
	LTE Band 4	20	100	0	QPSK	Bottom side	1	20050	1720	21.86	22.50	1.159	-0.01	0.308	0.357

Plot No.	Band	BW (MHz)	RB Size	RB offest	Modulation	Test Position	Gap (cm)	Ch.	Freq. (MHz)	Average Power (dBm)	Tune-Up Limit (dBm)	Tune-up Scaling Factor	Power Drift (dB)	Measured 1g SAR (W/kg)	Reported 1g SAR (W/kg)
	LTE Band 2	20	1	0	QPSK	Front	1	19100	1900	23.08	23.50	1.102	-0.07	0.778	0.857
	LTE Band 2	20	1	0	QPSK	Back	1	19100	1900	23.08	23.50	1.102	-0.05	0.821	0.904
	LTE Band 2	20	1	0	QPSK	Right side	1	19100	1900	23.08	23.50	1.102	-0.02	0.478	0.527
	LTE Band 2	20	1	0	QPSK	Top side	1	19100	1900	23.08	23.50	1.102	-0.04	0.283	0.312
	LTE Band 2	20	1	0	QPSK	Bottom side	1	19100	1900	23.08	23.50	1.102	-0.04	0.257	0.283
	LTE Band 2	20	1	0	QPSK	Front	1	18700	1860	23.02	23.50	1.117	-0.05	0.824	0.920
	LTE Band 2	20	1	0	QPSK	Front	1	18900	1880	22.94	23.50	1.138	-0.09	0.770	0.876
#06	LTE Band 2	20	1	0	QPSK	Back	1	18700	1860	23.02	23.50	1.117	-0.01	0.869	**0.971**
	LTE Band 2	20	1	0	QPSK	Back	1	18900	1880	22.94	23.50	1.138	-0.02	0.835	0.950
	LTE Band 2	20	50	49	QPSK	Front	1	19100	1900	22.14	22.50	1.086	-0.06	0.642	0.697
	LTE Band 2	20	50	49	QPSK	Back	1	19100	1900	22.14	22.50	1.086	0.09	0.680	0.739
	LTE Band 2	20	50	49	QPSK	Right side	1	19100	1900	22.14	22.50	1.086	-0.06	0.396	0.430
	LTE Band 2	20	50	49	QPSK	Top side	1	19100	1900	22.14	22.50	1.086	-0.07	0.227	0.247
	LTE Band 2	20	50	49	QPSK	Bottom side	1	19100	1900	22.14	22.50	1.086	-0.01	0.206	0.224
	LTE Band 2	20	100	0	QPSK	Front	1	19100	1900	22.06	22.50	1.107	-0.07	0.635	0.703
	LTE Band 2	20	100	0	QPSK	Back	1	19100	1900	22.06	22.50	1.107	-0.09	0.686	0.759
	LTE Band 2	20	100	0	QPSK	Right side	1	19100	1900	22.06	22.50	1.107	-0.05	0.395	0.437
	LTE Band 2	20	100	0	QPSK	Top side	1	19100	1900	22.06	22.50	1.107	-0.01	0.218	0.241
	LTE Band 2	20	100	0	QPSK	Bottom side	1	19100	1900	22.06	22.50	1.107	-0.07	0.206	0.228

<DTS WLAN SAR>

Plot No.	Band	Mode	Test Position	Gap (cm)	Ant.	Ch.	Freq. (MHz)	Average Power (dBm)	Tune-Up Limit (dBm)	Tune-up Scaling Factor	Duty Cycle %	Duty Cycle Scaling Factor	Power Drift (dB)	Measured 1g SAR (W/kg)	Reported 1g SAR (W/kg)
	WLAN 2.4GHz	802.11b 1Mbps	Front	1	Ant 0	6	2437	14.15	14.50	1.084	100	1.000	0.01	0.061	0.066
	WLAN 2.4GHz	802.11b 1Mbps	Back	1	Ant 0	6	2437	14.15	14.50	1.084	100	1.000	-0.08	0.052	0.056
	WLAN 2.4GHz	802.11b 1Mbps	Left side	1	Ant 0	6	2437	14.15	14.50	1.084	100	1.000	-0.09	0.020	0.022
	WLAN 2.4GHz	802.11b 1Mbps	Bottom side	1	Ant 0	6	2437	14.15	14.50	1.084	100	1.000	-0.09	0.073	0.079
	WLAN 2.4GHz	802.11b 1Mbps	Front	1	Ant 1	6	2437	14.67	15.00	1.079	100	1.000	-0.03	0.071	0.077
	WLAN 2.4GHz	802.11b 1Mbps	Back	1	Ant 1	6	2437	14.67	15.00	1.079	100	1.000	-0.07	0.050	0.054
#07	WLAN 2.4GHz	802.11b 1Mbps	Top side	1	Ant 1	6	2437	14.67	15.00	1.079	100	1.000	-0.03	0.091	**0.098**
	WLAN 2.4GHz	802.11n HT20 MCS8	Front	1	Ant 0+1	11	2462	12.51	13.00	1.119	90.9	1.100	-0.02	0.021	0.026
	WLAN 2.4GHz	802.11n HT20 MCS8	Back	1	Ant 0+1	11	2462	12.51	13.00	1.119	90.9	1.100	-0.04	0.019	0.023
	WLAN 2.4GHz	802.11n HT20 MCS8	Left side	1	Ant 0+1	11	2462	12.51	13.00	1.119	90.9	1.100	0.01	0.012	0.015
	WLAN 2.4GHz	802.11n HT20 MCS8	Top side	1	Ant 0+1	11	2462	12.51	13.00	1.119	90.9	1.100	-0.06	0.025	0.031
	WLAN 2.4GHz	802.11n HT20 MCS8	Bottom side	1	Ant 0+1	11	2462	12.51	13.00	1.119	90.9	1.100	-0.09	0.020	0.025

<UNII WLAN SAR>

Plot No.	Band	Mode	Test Position	Gap (cm)	Ant.	Ch.	Freq. (MHz)	Average Power (dBm)	Tune-Up Limit (dBm)	Tune-up Scaling Factor	Duty Cycle %	Duty Cycle Scaling Factor	Power Drift (dB)	Measured 1g SAR (W/kg)	Reported 1g SAR (W/kg)
	WLAN 5.2GHz	802.11n HT20 MCS8	Front	1	Ant 0+1	36	5180	13.88	14.00	1.028	90.6	1.104	0.1	0.188	0.213
	WLAN 5.2GHz	802.11n HT20 MCS8	Back	1	Ant 0+1	36	5180	13.88	14.00	1.028	90.6	1.104	0.15	0.084	0.095
	WLAN 5.2GHz	802.11n HT20 MCS8	Left side	1	Ant 0+1	36	5180	13.88	14.00	1.028	90.6	1.104	-0.14	0.040	0.045
	WLAN 5.2GHz	802.11n HT20 MCS8	Top side	1	Ant 0+1	36	5180	13.88	14.00	1.028	90.6	1.104	0.08	0.123	0.140
	WLAN 5.2GHz	802.11n HT20 MCS8	Bottom side	1	Ant 0+1	36	5180	13.88	14.00	1.028	90.6	1.104	-0.1	0.931	1.057
#08	WLAN 5.2GHz	802.11n HT20 MCS8	Bottom side	1	Ant 0+1	44	5220	13.52	14.00	1.117	90.6	1.104	0.04	0.874	**1.078**
	WLAN 5.2GHz	802.11n HT40 MCS8	Bottom side	1	Ant 0+1	46	5230	14.20	14.50	1.072	83.41	1.199	-0.07	0.574	0.737
	WLAN 5.8GHz	802.11a 6Mbps	Front	1	Ant 1	165	5825	11.46	12.00	1.132	95.12	1.051	0.1	0.183	0.218
	WLAN 5.8GHz	802.11a 6Mbps	Back	1	Ant 1	165	5825	11.46	12.00	1.132	95.12	1.051	-0.01	0.052	0.062
	WLAN 5.8GHz	802.11a 6Mbps	Top side	1	Ant 1	165	5825	11.46	12.00	1.132	95.12	1.051	-0.07	0.142	0.169
	WLAN 5.8GHz	802.11n HT20 MCS8	Front	1	Ant 0+1	165	5825	13.50	14.00	1.122	90.6	1.104	0.03	0.146	0.181
	WLAN 5.8GHz	802.11n HT20 MCS8	Back	1	Ant 0+1	165	5825	13.50	14.00	1.122	90.6	1.104	0.15	0.048	0.059
	WLAN 5.8GHz	802.11n HT20 MCS8	Left side	1	Ant 0+1	165	5825	13.50	14.00	1.122	90.6	1.104	0.11	0.039	0.048
	WLAN 5.8GHz	802.11n HT20 MCS8	Top side	1	Ant 0+1	165	5825	13.50	14.00	1.122	90.6	1.104	0.08	0.113	0.140
#09	WLAN 5.8GHz	802.11n HT20 MCS8	Bottom side	1	Ant 0+1	165	5825	13.50	14.00	1.122	90.6	1.104	0.11	0.547	**0.678**
	WLAN 5.8GHz	802.11n HT20 MCS8	Bottom side	1	Ant 0+1	149	5745	13.21	14.00	1.199	90.6	1.104	-0.12	0.475	0.629
	WLAN 5.8GHz	802.11n HT20 MCS8	Bottom side	1	Ant 0+1	157	5785	13.16	14.00	1.213	90.6	1.104	0.11	0.503	0.674

15.2 Repeated SAR Measurement

No.	Band	BW (MHz)	RB Size	RB offest	Mode	Test Position	Gap (cm)	Ant.	Ch.	Freq. (MHz)	Average Power (dBm)	Tune-Up Limit (dBm)	Tune-up Scaling Factor	Power Drift (dB)	Measured 1g SAR (W/kg)	Ratio	Reported 1g SAR (W/kg)
1st	LTE Band 2	20	1	0	QPSK	Back	1	-	18700	1860	23.02	23.50	1.117	-0.01	0.869	1	0.971
2nd	LTE Band 2	20	1	0	QPSK	Back	1	-	18700	1860	23.02	23.50	1.117	-0.01	0.863	1.007	0.964
1st	WLAN 5.2GHz	-	-	-	802.11n HT20 MCS8	Bottom side	1	Ant 0+1	36	5180	13.88	14.00	1.028	-0.10	0.931	1	1.057
2nd	WLAN 5.2GHz	-	-	-	802.11n HT20 MCS8	Bottom side	1	Ant 0+1	36	5180	13.88	14.00	1.028	0.01	0.922	1.011	1.046

General Note:

1. Per KDB 865664 D01v01r03, for each frequency band, repeated SAR measurement is required only when the measured SAR is ≥0.8W/kg
2. Per KDB 865664 D01v01r03, if the ratio among the repeated measurement is ≤ 1.2 and the measured SAR <1.45W/kg, only one repeated measurement is required.
3. The ratio is the difference in percentage between original and repeated *measured SAR*.
4. All measurement SAR result is scaled-up to account for tune-up tolerance and is compliant.

16. Simultaneous Transmission Analysis

NO.	Simultaneous Transmission Configurations	LTE uFi	Note
		Body	
1.	WCDMA(Data) + WLAN2.4GHz SISO(data)	Yes	2.4GHz Hotspot
2.	WCDMA(Data) + WLAN2.4GHz MIMO(data)	Yes	2.4GHz Hotspot
3.	WCDMA(Data) + WLAN5 GHz SISO(data)	Yes	WiFi Direct
4.	WCDMA(Data) + WLAN5 GHz MIMO(data)	Yes	WiFi Direct
5.	LTE (Data) + WLAN2.4GHz SISO(data)	Yes	2.4GHz Hotspot
6.	LTE (Data) + WLAN2.4GHz MIMO(data)	Yes	2.4GHz Hotspot
7.	LTE (Data) + WLAN5 GHz SISO(data)	Yes	WiFi Direct
8.	LTE (Data) + WLAN5 GHz MIMO(data)	Yes	WiFi Direct

General Note:

1. This device has no voice function.
2. This device 2.4GHz WLAN supports hotspot operation, 5.8GHz WLAN supports hotspot /WiFi Direct (GC/GO) and 5.2GHz supports WiFi Direct (GC only).
3. EUT will choose either WLAN 2.4GHz or WLAN 5GHz according to the network signal condition; therefore, they will not transmit simultaneously.
4. EUT will choose either WCDMA or LTE according to the network signal condition; therefore, they will not transmit simultaneously.
5. The worst case 5 GHz WLAN reported SAR for each configuration was used for SAR summation, regardless of whether the WLAN channel has WiFi Direct(GC/GO). Therefore, the following summations represent the absolute worst cases for simultaneous transmission with 5 GHz WLAN.
6. Per KDB 447498 D01v05r01, simultaneous transmission SAR is compliant if,
   i) Scalar SAR summation < 1.6W/kg.
   ii) SPLSR = $(SAR_1 + SAR_2)^{1.5}$ / (*min. separation distance, mm*), and the peak separation distance is determined from the square root of $[(x_1-x_2)^2 + (y_1-y_2)^2 + (z_1-z_2)^2]$, where (x_1, y_1, z_1) and (x_2, y_2, z_2) are the coordinates of the extrapolated peak SAR locations in the zoom scan
   If SPLSR ≤ 0.04, simultaneously transmission SAR measurement is not necessary
   iii) Simultaneously transmission SAR measurement, and the reported multi-band SAR < 1.6W/kg
7. For simultaneous transmission analysis, Bluetooth SAR is estimated per KDB 447498 D01v05r01 based on the formula below.
   i) (*max. power of channel, including tune-up tolerance, mW*)/(*min. test separation distance, mm*)]·[$\sqrt{f(GHz)/x}$] W/kg for *test separation distances* ≤ 50 mm; where *x* = 7.5 for 1-g SAR, and *x* = 18.75 for 10-g SAR.
   ii) When the minimum test separation distance is < 5mm, the distance is used 5mm to determine SAR test exclusion.
   iii) 0.4 W/kg for 1-g SAR and 1.0 W/kg for 10-g SAR, when the *test separation distances* is > 50 mm.

WLAN 5.2G Maximum Power	Exposure Position	Body
	Test separation	10 mm
11 dBm	Estimated SAR (W/kg)	0.397W/kg

16.1 Body Exposure Conditions

<WWAN PCB + WLAN (Antenna 0) DTS>

WWAN Band		Exposure Position	WWAN PCB Max. WWAN SAR (W/kg)	WLAN DTS Max. WLAN SAR (W/kg)	Summed SAR (W/kg)	SPLSR	Case No
WCMDA	Band V	Front	0.639	0.066	0.71		
		Back	0.680	0.056	0.74		
		Left side		0.022	0.02		
		Right side	0.064		0.06		
		Top side	0.378		0.38		
		Bottom side	0.389	0.079	0.47		
	Band II	Front	0.939	0.066	1.01		
		Back	0.926	0.056	0.98		
		Left side		0.022	0.02		
		Right side	0.498		0.50		
		Top side	0.247		0.25		
		Bottom side	0.302	0.079	0.38		

WWAN Band		Exposure Position	WWAN PCB Max. WWAN SAR (W/kg)	WLAN DTS Max. WLAN SAR (W/kg)	Summed SAR (W/kg)	SPLSR	Case No
LTE	Band 17	Front	0.355	0.066	0.42		
		Back	0.344	0.056	0.40		
		Left side		0.022	0.02		
		Right side	0.048		0.05		
		Top side	0.146		0.15		
		Bottom side	0.142	0.079	0.22		
	Band 5	Front	0.669	0.066	0.74		
		Back	0.713	0.056	0.77		
		Left side		0.022	0.02		
		Right side	0.060		0.06		
		Top side	0.424		0.42		
		Bottom side	0.413	0.079	0.49		
	Band 4	Front	0.935	0.066	1.00		
		Back	0.924	0.056	0.98		
		Left side		0.022	0.02		
		Right side	0.462		0.46		
		Top side	0.319		0.32		
		Bottom side	0.442	0.079	0.52		
	Band 2	Front	0.92	0.066	0.99		
		Back	0.971	0.056	**1.03**		
		Left side		0.022	0.02		
		Right side	0.527		0.53		
		Top side	0.312		0.31		
		Bottom side	0.283	0.079	0.36		

<WWAN PCB + WLAN (Antenna 1) DTS>

WWAN Band		Exposure Position	WWAN PCB Max. WWAN SAR (W/kg)	WLAN DTS Max. WLAN SAR (W/kg)	Summed SAR (W/kg)	SPLSR	Case No
WCMDA	Band V	Front	0.639	0.077	0.72		
		Back	0.68	0.054	0.73		
		Right side	0.064		0.06		
		Top side	0.378	0.098	0.48		
		Bottom side	0.389		0.39		
	Band II	Front	0.939	0.077	1.02		
		Back	0.926	0.054	0.98		
		Right side	0.498		0.50		
		Top side	0.247	0.098	0.35		
		Bottom side	0.302		0.30		

WWAN Band		Exposure Position	WWAN PCB Max. WWAN SAR (W/kg)	WLAN DTS Max. WLAN SAR (W/kg)	Summed SAR (W/kg)	SPLSR	Case No
LTE	Band 17	Front	0.355	0.077	0.43		
		Back	0.344	0.054	0.40		
		Right side	0.048		0.05		
		Top side	0.146	0.098	0.24		
		Bottom side	0.142		0.14		
	Band 5	Front	0.669	0.077	0.75		
		Back	0.713	0.054	0.77		
		Right side	0.060		0.06		
		Top side	0.424	0.098	0.52		
		Bottom side	0.413		0.41		
	Band 4	Front	0.935	0.077	1.01		
		Back	0.924	0.054	0.98		
		Right side	0.462		0.46		
		Top side	0.319	0.098	0.42		
		Bottom side	0.442		0.44		
	Band 2	Front	0.92	0.077	1.00		
		Back	0.971	0.054	1.03		
		Right side	0.527		0.53		
		Top side	0.312	0.098	0.41		
		Bottom side	0.283		0.28		

<WWAN PCB + WLAN (Antenna 0+1) DTS>

WWAN Band		Exposure Position	WWAN PCB Max. WWAN SAR (W/kg)	WLAN DTS Max. WLAN SAR (W/kg)	Summed SAR (W/kg)	SPLSR	Case No
WCMDA	Band V	Front	0.639	0.026	0.67		
		Back	0.68	0.023	0.70		
		Left side		0.015	0.02		
		Right side	0.064		0.06		
		Top side	0.378	0.031	0.41		
		Bottom side	0.389	0.025	0.41		
	Band II	Front	0.939	0.026	0.97		
		Back	0.926	0.023	0.95		
		Left side		0.015	0.02		
		Right side	0.498		0.50		
		Top side	0.247	0.031	0.28		
		Bottom side	0.302	0.025	0.33		

WWAN Band		Exposure Position	WWAN PCB Max. WWAN SAR (W/kg)	WLAN DTS Max. WLAN SAR (W/kg)	Summed SAR (W/kg)	SPLSR	Case No
LTE	Band 17	Front	0.355	0.026	0.38		
		Back	0.344	0.023	0.37		
		Left side		0.015	0.02		
		Right side	0.048		0.05		
		Top side	0.146	0.031	0.18		
		Bottom side	0.142	0.025	0.17		
	Band 5	Front	0.669	0.026	0.70		
		Back	0.713	0.023	0.74		
		Left side		0.015	0.02		
		Right side	0.060		0.06		
		Top side	0.424	0.031	0.46		
		Bottom side	0.413	0.025	0.44		
	Band 4	Front	0.935	0.026	0.96		
		Back	0.924	0.023	0.95		
		Left side		0.015	0.02		
		Right side	0.462		0.46		
		Top side	0.319	0.031	0.35		
		Bottom side	0.442	0.025	0.47		
	Band 2	Front	0.92	0.026	0.95		
		Back	0.971	0.023	0.99		
		Left side		0.015	0.02		
		Right side	0.527		0.53		
		Top side	0.312	0.031	0.34		
		Bottom side	0.283	0.025	0.31		

<WWAN PCB + WLAN (Antenna 0) NII>

WWAN Band		Exposure Position	WWAN PCB Max. WWAN SAR (W/kg)	WLAN NII Max. WLAN SAR (W/kg)	Summed SAR (W/kg)	SPLSR	Case No
WCMDA	Band V	Front	0.639	0.397	1.04		
		Back	0.680	0.397	1.08		
		Left side		0.397	0.40		
		Right side	0.064		0.06		
		Top side	0.378		0.38		
		Bottom side	0.389	0.397	0.79		
	Band II	Front	0.939	0.397	1.34		
		Back	0.926	0.397	1.32		
		Left side		0.397	0.40		
		Right side	0.498		0.50		
		Top side	0.247		0.25		
		Bottom side	0.302	0.397	0.70		

WWAN Band		Exposure Position	WWAN PCB Max. WWAN SAR (W/kg)	WLAN NII Max. WLAN SAR (W/kg)	Summed SAR (W/kg)	SPLSR	Case No
LTE	Band 17	Front	0.355	0.397	0.75		
		Back	0.344	0.397	0.74		
		Left side		0.397	0.40		
		Right side	0.048		0.05		
		Top side	0.146		0.15		
		Bottom side	0.142	0.397	0.54		
	Band 5	Front	0.669	0.397	1.07		
		Back	0.713	0.397	1.11		
		Left side		0.397	0.40		
		Right side	0.060		0.06		
		Top side	0.424		0.42		
		Bottom side	0.413	0.397	0.81		
	Band 4	Front	0.935	0.397	1.33		
		Back	0.924	0.397	1.32		
		Left side		0.397	0.40		
		Right side	0.462		0.46		
		Top side	0.319		0.32		
		Bottom side	0.442	0.397	0.84		
	Band 2	Front	0.920	0.397	1.32		
		Back	0.971	0.397	1.37		
		Left side		0.397	0.40		
		Right side	0.527		0.53		
		Top side	0.312		0.31		
		Bottom side	0.283	0.397	0.68		

<WWAN PCB + WLAN (Antenna 1) NII>

WWAN Band		Exposure Position	WWAN PCB Max. WWAN SAR (W/kg)	WLAN NII Max. WLAN SAR (W/kg)	Summed SAR (W/kg)	SPLSR	Case No
WCMDA	Band V	Front	0.639	0.218	0.86		
		Back	0.680	0.062	0.74		
		Right side	0.064		0.06		
		Top side	0.378	0.169	0.55		
		Bottom side	0.389		0.39		
	Band II	Front	0.939	0.218	1.16		
		Back	0.926	0.062	0.99		
		Right side	0.498		0.50		
		Top side	0.247	0.169	0.42		
		Bottom side	0.302		0.30		

WWAN Band		Exposure Position	WWAN PCB Max. WWAN SAR (W/kg)	WLAN NII Max. WLAN SAR (W/kg)	Summed SAR (W/kg)	SPLSR	Case No
LTE	Band 17	Front	0.355	0.218	0.57		
		Back	0.344	0.062	0.41		
		Right side	0.048		0.05		
		Top side	0.146	0.169	0.32		
		Bottom side	0.142		0.14		
	Band 5	Front	0.669	0.218	0.89		
		Back	0.713	0.062	0.78		
		Right side	0.060		0.06		
		Top side	0.424	0.169	0.59		
		Bottom side	0.413		0.41		
	Band 4	Front	0.935	0.218	1.15		
		Back	0.924	0.062	0.99		
		Right side	0.462		0.46		
		Top side	0.319	0.169	0.49		
		Bottom side	0.442		0.44		
	Band 2	Front	0.920	0.218	1.14		
		Back	0.971	0.062	1.03		
		Right side	0.527		0.53		
		Top side	0.312	0.169	0.48		
		Bottom side	0.283		0.28		

<WWAN PCB + WLAN (Antenna 0+1) NII>

WWAN Band		Exposure Position	WWAN PCB Max. WWAN SAR (W/kg)	WLAN NII Max. WLAN SAR (W/kg)	Summed SAR (W/kg)	SPLSR	Case No
WCMDA	Band V	Front	0.639	0.213	0.85		
		Back	0.680	0.095	0.78		
		Left side		0.048	0.05		
		Right side	0.064		0.06		
		Top side	0.378	0.14	0.52		
		Bottom side	0.389	1.078	1.47		
	Band II	Front	0.939	0.213	1.15		
		Back	0.926	0.095	1.02		
		Left side		0.048	0.05		
		Right side	0.498		0.50		
		Top side	0.247	0.140	0.39		
		Bottom side	0.302	1.078	1.38		

WWAN Band		Exposure Position	WWAN PCB Max. WWAN SAR (W/kg)	WLAN NII Max. WLAN SAR (W/kg)	Summed SAR (W/kg)	SPLSR	Case No
LTE	Band 17	Front	0.355	0.213	0.57		
		Back	0.344	0.095	0.44		
		Left side		0.048	0.05		
		Right side	0.048		0.05		
		Top side	0.146	0.140	0.29		
		Bottom side	0.142	1.078	1.22		
	Band 5	Front	0.669	0.213	0.88		
		Back	0.713	0.095	0.81		
		Left side		0.048	0.05		
		Right side	0.060		0.06		
		Top side	0.424	0.140	0.56		
		Bottom side	0.413	1.078	1.49		
	Band 4	Front	0.935	0.213	1.15		
		Back	0.924	0.095	1.02		
		Left side		0.048	0.05		
		Right side	0.462		0.46		
		Top side	0.319	0.140	0.46		
		Bottom side	0.442	1.078	**1.52**		
	Band 2	Front	0.92	0.213	1.13		
		Back	0.971	0.095	1.07		
		Left side		0.048	0.05		
		Right side	0.527		0.53		
		Top side	0.312	0.140	0.45		
		Bottom side	0.283	1.078	1.36		

Test Engineer : Kat Yin

17. Uncertainty Assessment

The component of uncertainly may generally be categorized according to the methods used to evaluate them. The evaluation of uncertainly by the statistical analysis of a series of observations is termed a Type An evaluation of uncertainty. The evaluation of uncertainty by means other than the statistical analysis of a series of observation is termed a Type B evaluation of uncertainty. Each component of uncertainty, however evaluated, is represented by an estimated standard deviation, termed standard uncertainty, which is determined by the positive square root of the estimated variance.

A Type A evaluation of standard uncertainty may be based on any valid statistical method for treating data. This includes calculating the standard deviation of the mean of a series of independent observations; using the method of least squares to fit a curve to the data in order to estimate the parameter of the curve and their standard deviations; or carrying out an analysis of variance in order to identify and quantify random effects in certain kinds of measurement.

A type B evaluation of standard uncertainty is typically based on scientific judgment using all of the relevant information available. These may include previous measurement data, experience, and knowledge of the behavior and properties of relevant materials and instruments, manufacture's specification, data provided in calibration reports and uncertainties assigned to reference data taken from handbooks. Broadly speaking, the uncertainty is either obtained from an outdoor source or obtained from an assumed distribution, such as the normal distribution, rectangular or triangular distributions indicated in table below.

Uncertainty Distributions	Normal	Rectangular	Triangular	U-Shape
Multi-plying Factor[(a)]	1/k[(b)]	1/√3	1/√6	1/√2

(a) standard uncertainty is determined as the product of the multiplying factor and the estimated range of variations in the measured quantity

(b) κ is the coverage factor

Table 16.1. Standard Uncertainty for Assumed Distribution

The combined standard uncertainty of the measurement result represents the estimated standard deviation of the result. It is obtained by combining the individual standard uncertainties of both Type A and Type B evaluation using the usual "root-sum-squares" (RSS) methods of combining standard deviations by taking the positive square root of the estimated variances.

Expanded uncertainty is a measure of uncertainty that defines an interval about the measurement result within which the measured value is confidently believed to lie. It is obtained by multiplying the combined standard uncertainty by a coverage factor. Typically, the coverage factor ranges from 2 to 3. Using a coverage factor allows the true value of a measured quantity to be specified with a defined probability within the specified uncertainty range. For purpose of this document, a coverage factor two is used, which corresponds to confidence interval of about 95 %. The DASY uncertainty Budget is shown in the following tables.

Error Description	Uncertainty Value (±%)	Probability Distribution	Divisor	Ci (1g)	Ci (10g)	Standard Uncertainty (1g)	Standard Uncertainty (10g)
Measurement System							
Probe Calibration	6.0	Normal	1	1	1	± 6.0 %	± 6.0 %
Axial Isotropy	4.7	Rectangular	√3	0.7	0.7	± 1.9 %	± 1.9 %
Hemispherical Isotropy	9.6	Rectangular	√3	0.7	0.7	± 3.9 %	± 3.9 %
Boundary Effects	1.0	Rectangular	√3	1	1	± 0.6 %	± 0.6 %
Linearity	4.7	Rectangular	√3	1	1	± 2.7 %	± 2.7 %
System Detection Limits	1.0	Rectangular	√3	1	1	± 0.6 %	± 0.6 %
Readout Electronics	0.3	Normal	1	1	1	± 0.3 %	± 0.3 %
Response Time	0.8	Rectangular	√3	1	1	± 0.5 %	± 0.5 %
Integration Time	2.6	Rectangular	√3	1	1	± 1.5 %	± 1.5 %
RF Ambient Noise	3.0	Rectangular	√3	1	1	± 1.7 %	± 1.7 %
RF Ambient Reflections	3.0	Rectangular	√3	1	1	± 1.7 %	± 1.7 %
Probe Positioner	0.4	Rectangular	√3	1	1	± 0.2 %	± 0.2 %
Probe Positioning	2.9	Rectangular	√3	1	1	± 1.7 %	± 1.7 %
Max. SAR Eval.	1.0	Rectangular	√3	1	1	± 0.6 %	± 0.6 %
Test Sample Related							
Device Positioning	2.9	Normal	1	1	1	± 2.9 %	± 2.9 %
Device Holder	3.6	Normal	1	1	1	± 3.6 %	± 3.6 %
Power Drift	5.0	Rectangular	√3	1	1	± 2.9 %	± 2.9 %
Phantom and Setup							
Phantom Uncertainty	4.0	Rectangular	√3	1	1	± 2.3 %	± 2.3 %
Liquid Conductivity (Target)	5.0	Rectangular	√3	0.64	0.43	± 1.8 %	± 1.2 %
Liquid Conductivity (Meas.)	2.5	Normal	1	0.64	0.43	± 1.6 %	± 1.1 %
Liquid Permittivity (Target)	5.0	Rectangular	√3	0.6	0.49	± 1.7 %	± 1.4 %
Liquid Permittivity (Meas.)	2.5	Normal	1	0.6	0.49	± 1.5 %	± 1.2 %
Combined Standard Uncertainty						± 11.0 %	± 10.8 %
Coverage Factor for 95 %						K=2	
Expanded Uncertainty						**± 22.0 %**	**± 21.5 %**

Table 16.2. Uncertainty Budget for frequency range 300 MHz to 3 GHz

Error Description	Uncertainty Value (±%)	Probability Distribution	Divisor	Ci (1g)	Ci (10g)	Standard Uncertainty (1g)	Standard Uncertainty (10g)
Measurement System							
Probe Calibration	6.55	Normal	1	1	1	± 6.55 %	± 6.55 %
Axial Isotropy	4.7	Rectangular	√3	0.7	0.7	± 1.9 %	± 1.9 %
Hemispherical Isotropy	9.6	Rectangular	√3	0.7	0.7	± 3.9 %	± 3.9 %
Boundary Effects	2.0	Rectangular	√3	1	1	± 1.2 %	± 1.2 %
Linearity	4.7	Rectangular	√3	1	1	± 2.7 %	± 2.7 %
System Detection Limits	1.0	Rectangular	√3	1	1	± 0.6 %	± 0.6 %
Readout Electronics	0.3	Normal	1	1	1	± 0.3 %	± 0.3 %
Response Time	0.8	Rectangular	√3	1	1	± 0.5 %	± 0.5 %
Integration Time	2.6	Rectangular	√3	1	1	± 1.5 %	± 1.5 %
RF Ambient Noise	3.0	Rectangular	√3	1	1	± 1.7 %	± 1.7 %
RF Ambient Reflections	3.0	Rectangular	√3	1	1	± 1.7 %	± 1.7 %
Probe Positioner	0.8	Rectangular	√3	1	1	± 0.5 %	± 0.5 %
Probe Positioning	9.9	Rectangular	√3	1	1	± 5.7 %	± 5.7 %
Max. SAR Eval.	4.0	Rectangular	√3	1	1	± 2.3 %	± 2.3 %
Test Sample Related							
Device Positioning	2.9	Normal	1	1	1	± 2.9 %	± 2.9 %
Device Holder	3.6	Normal	1	1	1	± 3.6 %	± 3.6 %
Power Drift	5.0	Rectangular	√3	1	1	± 2.9 %	± 2.9 %
Phantom and Setup							
Phantom Uncertainty	4.0	Rectangular	√3	1	1	± 2.3 %	± 2.3 %
Liquid Conductivity (Target)	5.0	Rectangular	√3	0.64	0.43	± 1.8 %	± 1.2 %
Liquid Conductivity (Meas.)	2.5	Normal	1	0.64	0.43	± 1.6 %	± 1.1 %
Liquid Permittivity (Target)	5.0	Rectangular	√3	0.6	0.49	± 1.7 %	± 1.4 %
Liquid Permittivity (Meas.)	2.5	Normal	1	0.6	0.49	± 1.5 %	± 1.2 %
Combined Standard Uncertainty						± 12.8 %	± 12.6 %
Coverage Factor for 95 %						K=2	
Expanded Uncertainty						**± 25.6 %**	**± 25.2 %**

Table 16.3. Uncertainty Budget for frequency range 3 GHz to 6 GHz

18. References

[1] FCC 47 CFR Part 2 “Frequency Allocations and Radio Treaty Matters; General Rules and Regulations”

[2] ANSI/IEEE Std. C95.1-1992, “IEEE Standard for Safety Levels with Respect to Human Exposure to Radio Frequency Electromagnetic Fields, 3 kHz to 300 GHz”, September 1992

[3] IEEE Std. 1528-2003, “Recommended Practice for Determining the Peak Spatial-Average Specific Absorption Rate (SAR) in the Human Head from Wireless Communications Devices: Measurement Techniques”, December 2003

[4] SPEAG DASY System Handbook

[5] FCC KDB 248227 D01 v01r02, “SAR Measurement Procedures for 802.11 a/b/g Transmitters”, May 2007

[6] FCC KDB 447498 D01 v05r02, “Mobile and Portable Device RF Exposure Procedures and Equipment Authorization Policies”, Feb 2014

[7] FCC KDB 941225 D01 v02, “SAR Measurement Procedures for 3G Devices – CDMA 2000 / Ev-Do / WCDMA / HSDPA / HSPA”, October 2007

[8] FCC KDB 941225 D02 v02r02, “SAR Guidance for HSPA, HSPA+, DC-HSDPA and 1x-Advanced”, May 2013.

[9] FCC KDB 941225 D05 v02r03, “SAR Evaluation Considerations for LTE Devices”, Dec 2013

[10] FCC KDB 941225 D05A v01r01, “Rel. 10 LTE SAR Test Guidance and KDB Inquiries”, Aug 2014

[11] FCC KDB 941225 D06 v01r01, "SAR Evaluation Procedures for Portable Devices with Wireless Router Capabilities", May 2013.

[12] FCC KDB 865664 D01 v01r03, "SAR Measurement Requirements for 100 MHz to 6 GHz", Feb 2014.

[13] FCC KDB 865664 D02 v01r01, “RF Exposure Compliance Reporting and Documentation Considerations” May 2013.

Appendix A. Plots of System Performance Check

The plots are shown as follows.

Test Laboratory: Sporton International Inc. SAR/HAC Testing Lab Date: 2014/7/25

System Check_Body_750MHz_140725

DUT: D750V3-SN:1099

Communication System: CW; Frequency: 750 MHz;Duty Cycle: 1:1
Medium: MSL_750_140725 Medium parameters used: f = 750 MHz; σ = 0.966 S/m; ε_r = 53.934; ρ = 1000 kg/m^3
Ambient Temperature：23.7 ℃; Liquid Temperature ：22.5 ℃

DASY5 Configuration:
- Probe: EX3DV4 - SN3911; ConvF(10.06, 10.06, 10.06); Calibrated: 2014/4/22;
- Sensor-Surface: 2mm (Mechanical Surface Detection)
- Electronics: DAE4 Sn1358; Calibrated: 2014/4/30
- Phantom: SAM2; Type: QD000P40CD; Serial: TP:1754
- Measurement SW: DASY52, Version 52.8 (5); SEMCAD X Version 14.6.8 (7028)

Pin=250mW/Area Scan (61x61x1): Interpolated grid: dx=15mm, dy=15mm
Maximum value of SAR (interpolated) = 2.53 W/kg

Pin=250mW/Zoom Scan (5x5x7)/Cube 0: Measurement grid: dx=8mm, dy=8mm, dz=5mm
Reference Value = 47.235 V/m; Power Drift = 0.01 dB
Peak SAR (extrapolated) = 2.95 W/kg
SAR(1 g) = 2.03 W/kg; SAR(10 g) = 1.36 W/kg
Maximum value of SAR (measured) = 2.54 W/kg

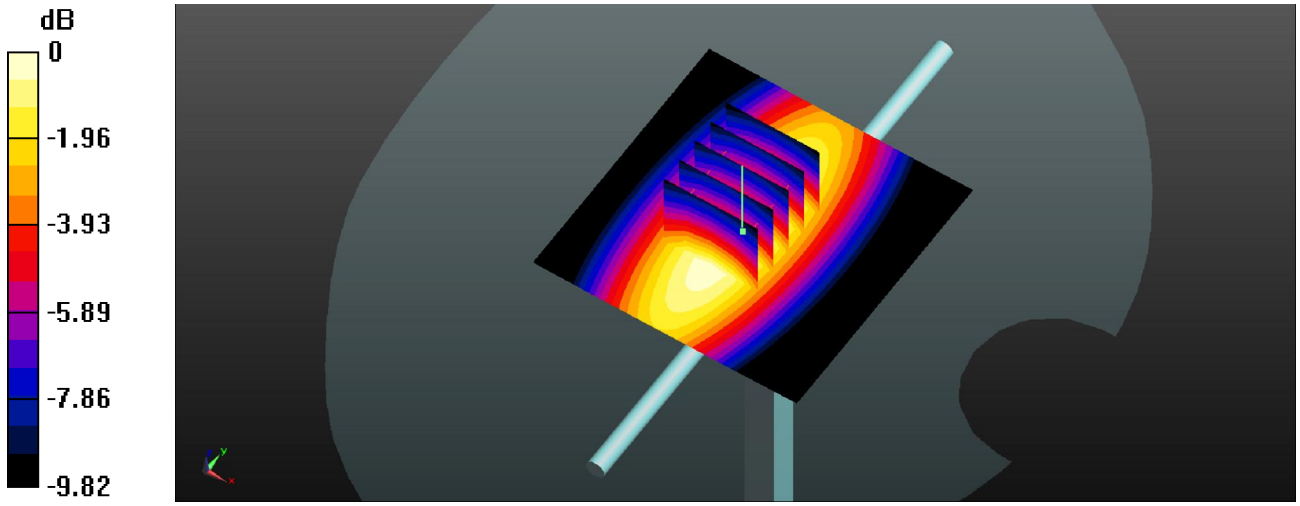

0 dB = 2.54 W/kg

Test Laboratory: Sporton International Inc. SAR/HAC Testing Lab Date: 2014/7/24

System Check_Body_835MHz_140724

DUT: D835V2-SN:4d151

Communication System: CW; Frequency: 835 MHz;Duty Cycle: 1:1
Medium: MSL_835_140724 Medium parameters used: f = 835 MHz; σ = 0.974 S/m; ε_r = 54.111; ρ = 1000 kg/m^3
Ambient Temperature：23.6 ℃; Liquid Temperature ：22.7 ℃

DASY5 Configuration:
- Probe: EX3DV4 - SN3911; ConvF(10.02, 10.02, 10.02); Calibrated: 2014/4/22;
- Sensor-Surface: 2mm (Mechanical Surface Detection)
- Electronics: DAE4 Sn1358; Calibrated: 2014/4/30
- Phantom: SAM2; Type: QD000P40CD; Serial: TP:1754
- Measurement SW: DASY52, Version 52.8 (5); SEMCAD X Version 14.6.8 (7028)

Pin=250mW/Area Scan (61x61x1): Interpolated grid: dx=15mm, dy=15mm
Maximum value of SAR (interpolated) = 2.53 W/kg

Pin=250mW/Zoom Scan (5x5x7)/Cube 0: Measurement grid: dx=8mm, dy=8mm, dz=5mm
Reference Value = 50.506 V/m; Power Drift = -0.06 dB
Peak SAR (extrapolated) = 3.41 W/kg
SAR(1 g) = 2.33 W/kg; SAR(10 g) = 1.56 W/kg
Maximum value of SAR (measured) = 2.50 W/kg

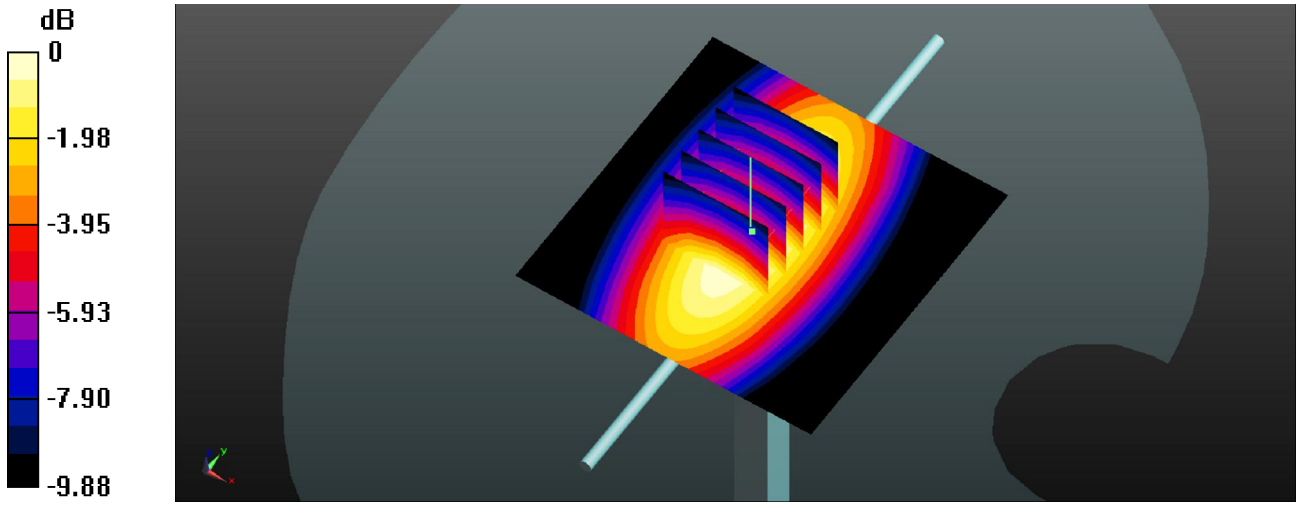

0 dB = 2.50 W/kg

Test Laboratory: Sporton International Inc. SAR/HAC Testing Lab Date: 2014/7/24

System Check_Body_1750MHz_140724

DUT: D1750V2-SN:1090

Communication System: CW; Frequency: 1750 MHz;Duty Cycle: 1:1
Medium: MSL_1750_140724 Medium parameters used: f = 1750 MHz; σ = 1.522 S/m; ε_r = 54.439; ρ = 1000 kg/m^3
Ambient Temperature：23.5 ℃; Liquid Temperature ：22.6 ℃

DASY5 Configuration:
- Probe: EX3DV4 - SN3911; ConvF(8.11, 8.11, 8.11); Calibrated: 2014/4/22;
- Sensor-Surface: 2mm (Mechanical Surface Detection)
- Electronics: DAE4 Sn1358; Calibrated: 2014/4/30
- Phantom: SAM1; Type: QD000P40CD; Serial: TP:1753
- Measurement SW: DASY52, Version 52.8 (5); SEMCAD X Version 14.6.8 (7028)

Pin=250mW/Area Scan (61x61x1): Interpolated grid: dx=15mm, dy=15mm
Maximum value of SAR (interpolated) = 13.4 W/kg

Pin=250mW/Zoom Scan (5x5x7)/Cube 0: Measurement grid: dx=8mm, dy=8mm, dz=5mm
Reference Value = 95.081 V/m; Power Drift = 0.02 dB
Peak SAR (extrapolated) = 16.6 W/kg
SAR(1 g) = 9.53 W/kg; SAR(10 g) = 5.1 W/kg
Maximum value of SAR (measured) = 13.3 W/kg

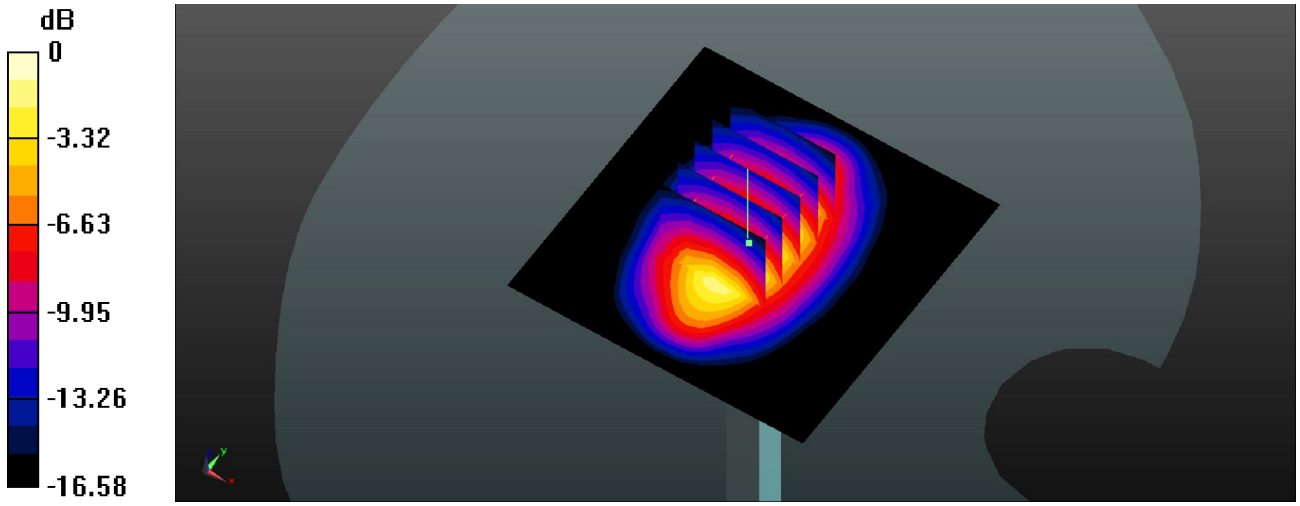

0 dB = 13.3 W/kg

Test Laboratory: Sporton International Inc. SAR/HAC Testing Lab Date: 2014/7/23

System Check_Body_1900MHz_140723

DUT: D1900V2-SN:5d170

Communication System: CW; Frequency: 1900 MHz;Duty Cycle: 1:1
Medium: MSL_1900_140723 Medium parameters used: f = 1900 MHz; σ = 1.528 S/m; ε_r = 53.974; ρ = 1000 kg/m^3
Ambient Temperature：23.5 ℃; Liquid Temperature ：22.6 ℃

DASY5 Configuration:
- Probe: EX3DV4 - SN3911; ConvF(7.83, 7.83, 7.83); Calibrated: 2014/4/22;
- Sensor-Surface: 2mm (Mechanical Surface Detection)
- Electronics: DAE4 Sn1358; Calibrated: 2014/4/30
- Phantom: SAM2; Type: QD000P40CD; Serial: TP:1754
- Measurement SW: DASY52, Version 52.8 (5); SEMCAD X Version 14.6.8 (7028)

Pin=250mW/Area Scan (61x61x1): Interpolated grid: dx=15mm, dy=15mm
Maximum value of SAR (interpolated) = 13.0 W/kg

Pin=250mW/Zoom Scan (5x5x7)/Cube 0: Measurement grid: dx=8mm, dy=8mm, dz=5mm
Reference Value = 81.139 V/m; Power Drift = -0.01 dB
Peak SAR (extrapolated) = 16.4 W/kg
SAR(1 g) = 9.88 W/kg; SAR(10 g) = 4.88 W/kg
Maximum value of SAR (measured) = 13.0 W/kg

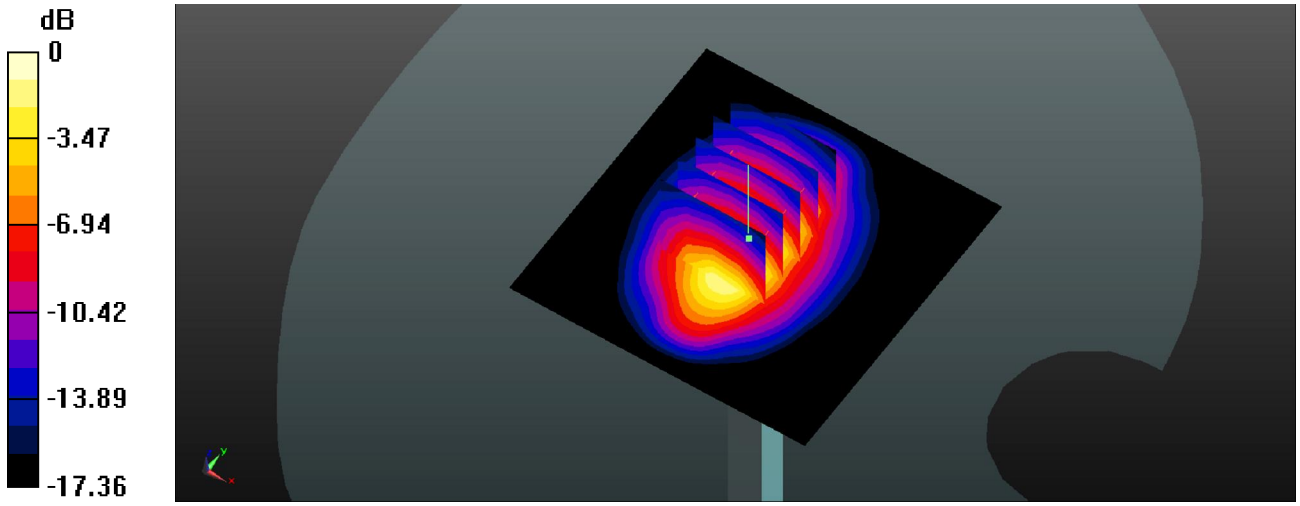

0 dB = 13.0 W/kg

Test Laboratory: Sporton International Inc. SAR/HAC Testing Lab Date: 2014/7/31

System Check_Body_2450MHz_140731

DUT: D2450V2-SN:908

Communication System: CW; Frequency: 2450 MHz;Duty Cycle: 1:1
Medium: MSL_2450_140731 Medium parameters used: f = 2450 MHz; σ = 1.984 S/m; ε_r = 51.165; ρ = 1000 kg/m^3
Ambient Temperature：23.6 ℃; Liquid Temperature ：22.6 ℃

DASY5 Configuration:
- Probe: EX3DV4 - SN3911; ConvF(7.32, 7.32, 7.32); Calibrated: 2014/4/22;
- Sensor-Surface: 2mm (Mechanical Surface Detection)
- Electronics: DAE4 Sn1358; Calibrated: 2014/4/30
- Phantom: SAM2; Type: QD000P40CD; Serial: TP:1754
- Measurement SW: DASY52, Version 52.8 (5); SEMCAD X Version 14.6.8 (7028)

Pin=250mW/Area Scan (81x81x1): Interpolated grid: dx=12mm, dy=12mm
Maximum value of SAR (interpolated) = 19.9 W/kg

Pin=250mW/Zoom Scan (7x7x7)/Cube 0: Measurement grid: dx=5mm, dy=5mm, dz=5mm
Reference Value = 86.868 V/m; Power Drift = -0.07 dB
Peak SAR (extrapolated) = 26.9 W/kg
SAR(1 g) = 13.3 W/kg; SAR(10 g) = 6.24 W/kg
Maximum value of SAR (measured) = 20.2 W/kg

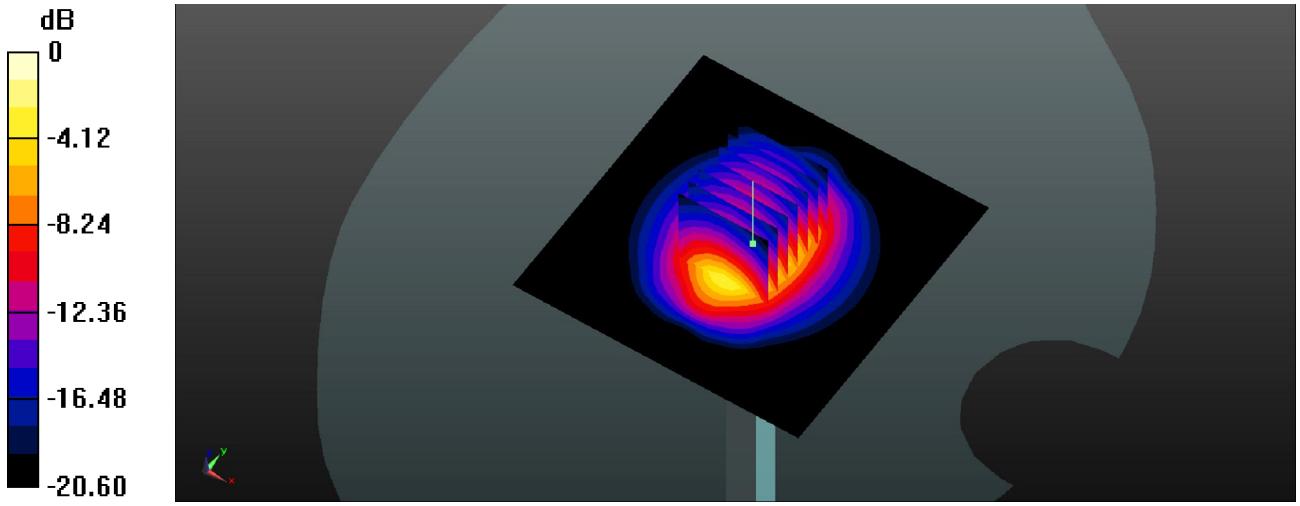

0 dB = 20.2 W/kg

Test Laboratory: Sporton International Inc. SAR/HAC Testing Lab Date: 2014.08.18

System Check_Body_5200MHz_140818

DUT: D5000V2-SN:1006

Communication System: CW; Frequency: 5200 MHz;Duty Cycle: 1:1
Medium: MSL_5000_140818 Medium parameters used: f = 5200 MHz; σ = 5.297 mho/m; ε_r = 49.185; ρ = 1000 kg/m^3
Ambient Temperature：23.3 ℃； Liquid Temperature：22.6 ℃

DASY5 Configuration:
- Probe: EX3DV4 - SN3857; ConvF(4.54, 4.54, 4.54); Calibrated: 2014.05.23
- Sensor-Surface: 1.4mm (Mechanical Surface Detection)
- Electronics: DAE4 Sn1210; Calibrated: 2014.05.19
- Phantom: SAM1; Type: SAM; Serial: TP-1479
- Measurement SW: DASY52, Version 52.8 (8); SEMCAD X Version 14.4.5 (3634)

Pin=100mW/Area Scan (71x71x1): Measurement grid: dx=10mm, dy=10mm
Maximum value of SAR (interpolated) = 16.978 mW/g

Pin=100mW/Zoom Scan (8x8x7)/Cube 0: Measurement grid: dx=4mm, dy=4mm, dz=1.4mm
Reference Value = 40.302 V/m; Power Drift = 0.04 dB
Peak SAR (extrapolated) = 29.825 W/kg
SAR(1 g) = 7.24 mW/g; SAR(10 g) = 2.03 mW/g
Maximum value of SAR (measured) = 16.780 mW/g

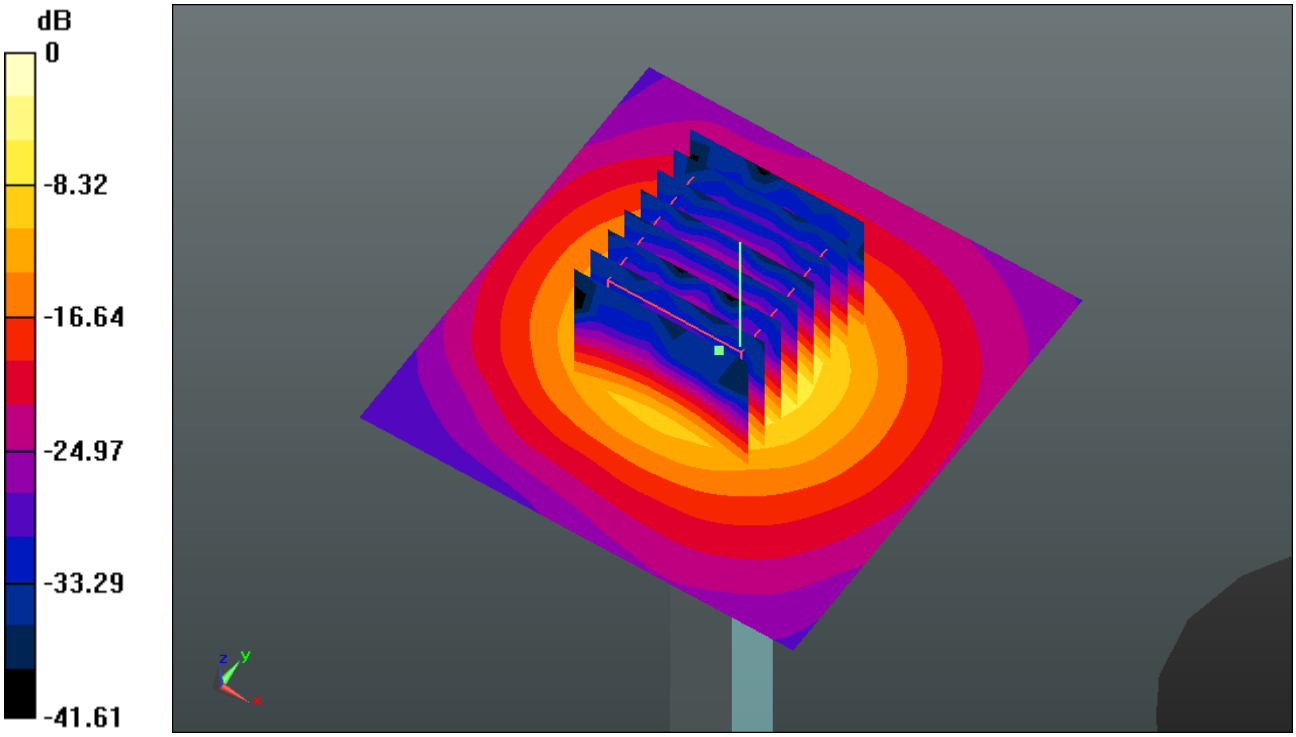

0 dB = 16.780mW/g

Test Laboratory: Sporton International Inc. SAR/HAC Testing Lab Date: 2014.08.18

System Check_Body_5800MHz_140818

DUT: D5000V2-SN:1006

Communication System: CW; Frequency: 5800 MHz;Duty Cycle: 1:1
Medium: MSL_5000_140818 Medium parameters used: f = 5800 MHz; σ = 6.127 mho/m; ε_r = 47.784; ρ = 1000 kg/m^3
Ambient Temperature：23.3 ℃； Liquid Temperature：22.6 ℃

DASY5 Configuration:
- Probe: EX3DV4 - SN3857; ConvF(4.21, 4.21, 4.21); Calibrated: 2014.05.23
- Sensor-Surface: 1.4mm (Mechanical Surface Detection)
- Electronics: DAE4 Sn1210; Calibrated: 2014.05.19
- Phantom: SAM1; Type: SAM; Serial: TP-1479
- Measurement SW: DASY52, Version 52.8 (8); SEMCAD X Version 14.4.5 (3634)

Pin=100mW/Area Scan (71x71x1): Measurement grid: dx=10mm, dy=10mm
Maximum value of SAR (interpolated) = 17.667 mW/g

Pin=100mW/Zoom Scan (8x8x7)/Cube 0: Measurement grid: dx=4mm, dy=4mm, dz=1.4mm
Reference Value = 36.719 V/m; Power Drift = -0.0087 dB
Peak SAR (extrapolated) = 32.163 W/kg
SAR(1 g) = 7.08 mW/g; SAR(10 g) = 1.97 mW/g
Maximum value of SAR (measured) = 17.317 mW/g

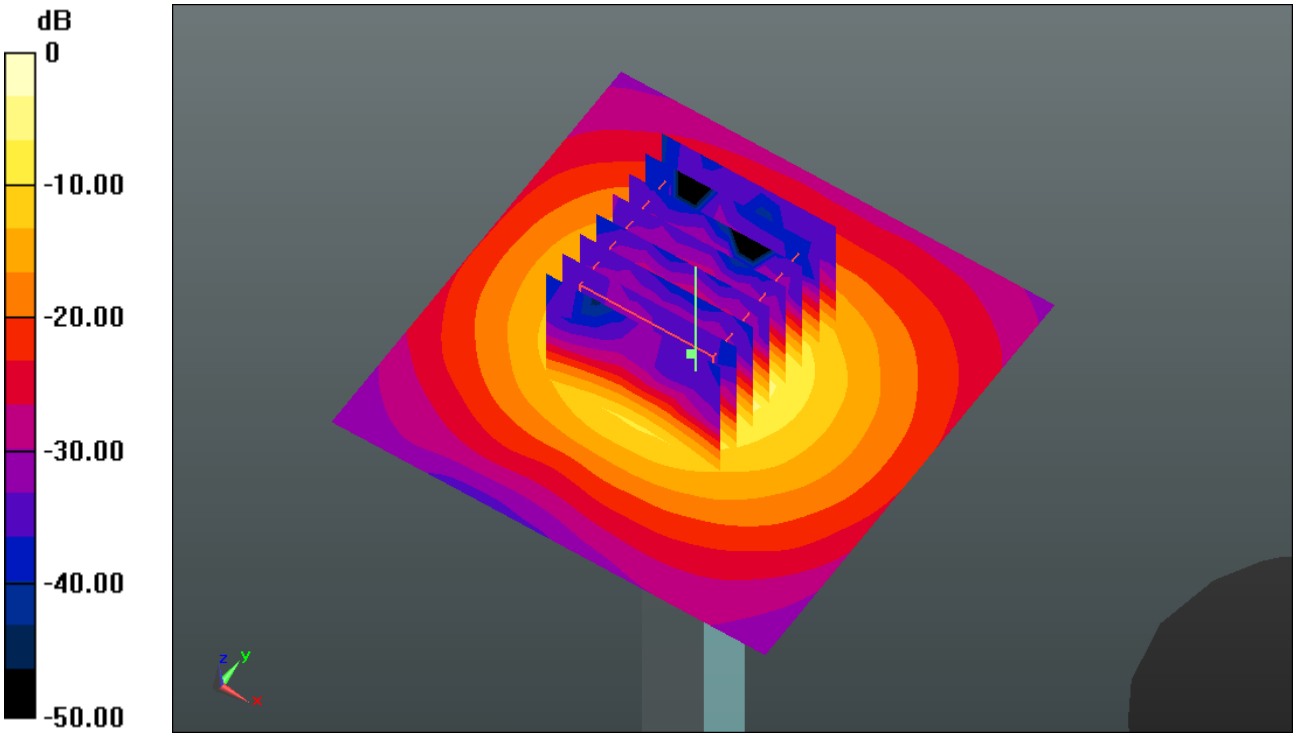

0 dB = 17.320mW/g

Appendix B. Plots of High SAR Measurement

The plots are shown as follows.

Test Laboratory: Sporton International Inc. SAR/HAC Testing Lab Date: 2014/7/24

#01 WCDMA Band V_RMC 12.2K_Back_1.0cm_Ch4233

Communication System: WCDMA ; Frequency: 846.6 MHz;Duty Cycle: 1:1
Medium: MSL_835_140724 Medium parameters used: f = 846.6 MHz; σ = 0.985 S/m; ε_r = 54.002; ρ = 1000 kg/m^3
Ambient Temperature：23.6 ℃; Liquid Temperature ：22.7 ℃

DASY5 Configuration:
- Probe: EX3DV4 - SN3911; ConvF(10.02, 10.02, 10.02); Calibrated: 2014/4/22;
- Sensor-Surface: 2mm (Mechanical Surface Detection)
- Electronics: DAE4 Sn1358; Calibrated: 2014/4/30
- Phantom: SAM2; Type: QD000P40CD; Serial: TP:1754
- Measurement SW: DASY52, Version 52.8 (5); SEMCAD X Version 14.6.8 (7028)

Ch4233/Area Scan (61x91x1): Interpolated grid: dx=15mm, dy=15mm
Maximum value of SAR (interpolated) = 0.669 W/kg

Ch4233/Zoom Scan (5x5x7)/Cube 0: Measurement grid: dx=8mm, dy=8mm, dz=5mm
Reference Value = 20.956 V/m; Power Drift = -0.06 dB
Peak SAR (extrapolated) = 0.745 W/kg
SAR(1 g) = 0.572 W/kg; SAR(10 g) = 0.434 W/kg
Maximum value of SAR (measured) = 0.672 W/kg

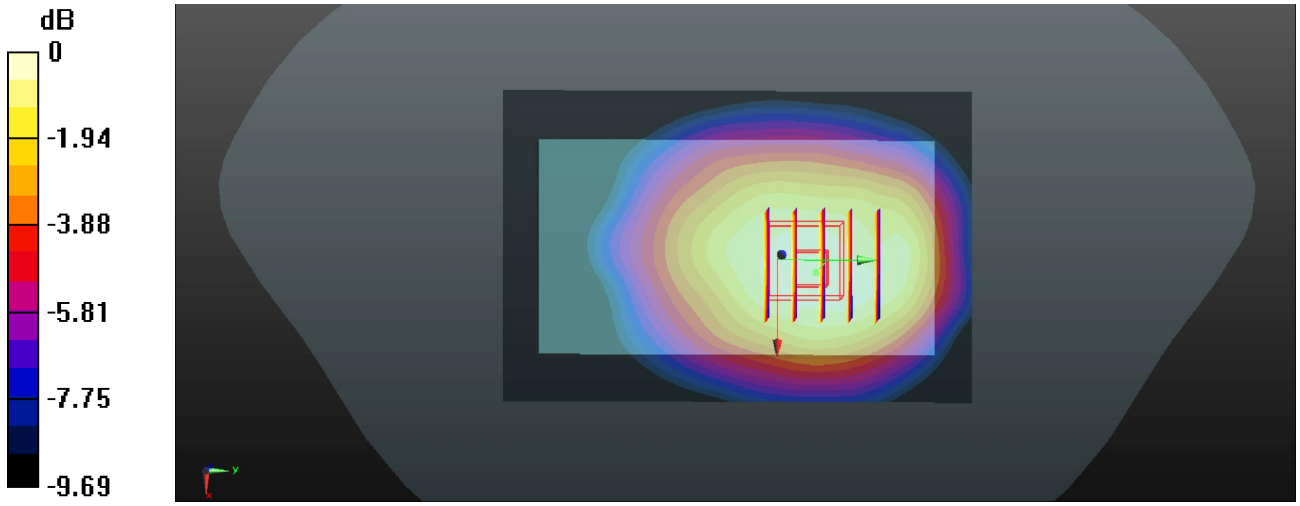

0 dB = 0.672 W/kg

Test Laboratory: Sporton International Inc. SAR/HAC Testing Lab Date: 2014/7/23

#02 WCDMA Band II_RMC 12.2K_Front_1.0cm_Ch9400

Communication System: WCDMA ; Frequency: 1880 MHz;Duty Cycle: 1:1
Medium: MSL_1900_140723 Medium parameters used: f = 1880 MHz; σ = 1.507 S/m; ε_r = 54.011; ρ = 1000 kg/m^3
Ambient Temperature：23.5 ℃; Liquid Temperature ：22.6 ℃

DASY5 Configuration:
- Probe: EX3DV4 - SN3911; ConvF(7.83, 7.83, 7.83); Calibrated: 2014/4/22;
- Sensor-Surface: 2mm (Mechanical Surface Detection)
- Electronics: DAE4 Sn1358; Calibrated: 2014/4/30
- Phantom: SAM2; Type: QD000P40CD; Serial: TP:1754
- Measurement SW: DASY52, Version 52.8 (5); SEMCAD X Version 14.6.8 (7028)

Ch9400/Area Scan (61x91x1): Interpolated grid: dx=15mm, dy=15mm
Maximum value of SAR (interpolated) = 0.981 W/kg

Ch9400/Zoom Scan (5x5x7)/Cube 0: Measurement grid: dx=8mm, dy=8mm, dz=5mm
Reference Value = 10.033 V/m; Power Drift = -0.03 dB
Peak SAR (extrapolated) = 1.17 W/kg
SAR(1 g) = 0.776 W/kg; SAR(10 g) = 0.476 W/kg
Maximum value of SAR (measured) = 0.992 W/kg

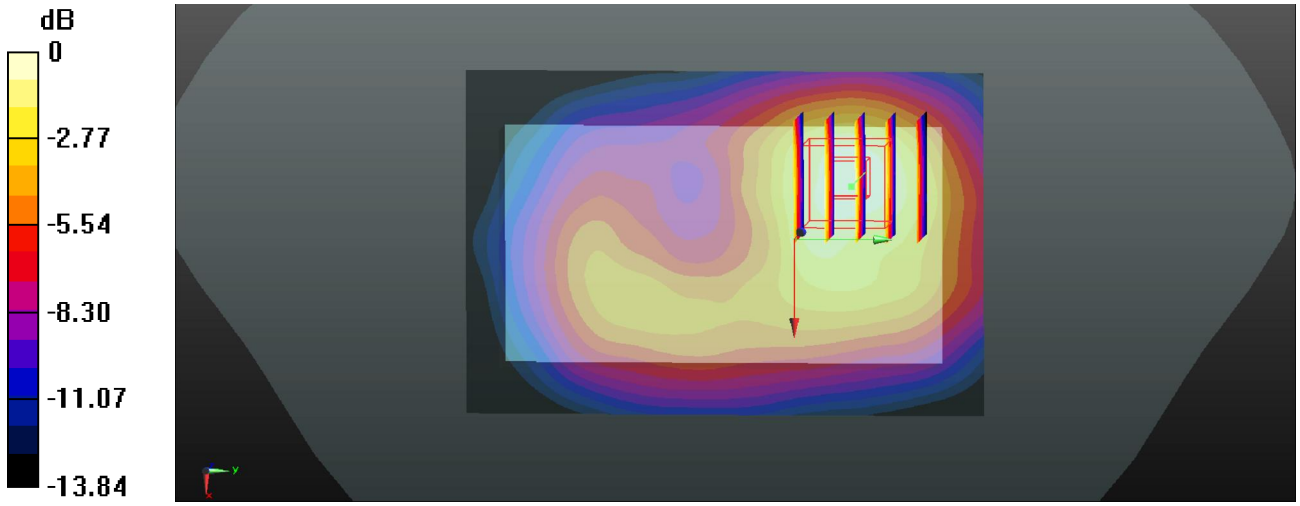

0 dB = 0.992 W/kg

Test Laboratory: Sporton International Inc. SAR/HAC Testing Lab Date: 2014/7/25

#03 LTE Band 17_QPSK_10M(1,49)_Front_1.0cm_Ch23800

Communication System: LTE; Frequency: 711 MHz;Duty Cycle: 1:1
Medium: MSL_750_140725 Medium parameters used: f = 711 MHz; σ = 0.935 S/m; ε_r = 54.813; ρ = 1000 kg/m^3
Ambient Temperature：23.7 ℃; Liquid Temperature ：22.5 ℃

DASY5 Configuration:
- Probe: EX3DV4 - SN3911; ConvF(10.06, 10.06, 10.06); Calibrated: 2014/4/22;
- Sensor-Surface: 2mm (Mechanical Surface Detection)
- Electronics: DAE4 Sn1358; Calibrated: 2014/4/30
- Phantom: SAM2; Type: QD000P40CD; Serial: TP:1754
- Measurement SW: DASY52, Version 52.8 (5); SEMCAD X Version 14.6.8 (7028)

Ch23800/Area Scan (61x91x1): Interpolated grid: dx=15mm, dy=15mm
Maximum value of SAR (interpolated) = 0.385 W/kg

Ch23800/Zoom Scan (5x5x7)/Cube 0: Measurement grid: dx=8mm, dy=8mm, dz=5mm
Reference Value = 16.581 V/m; Power Drift = -0.05 dB
Peak SAR (extrapolated) = 0.414 W/kg
SAR(1 g) = 0.328 W/kg; SAR(10 g) = 0.248 W/kg
Maximum value of SAR (measured) = 0.380 W/kg

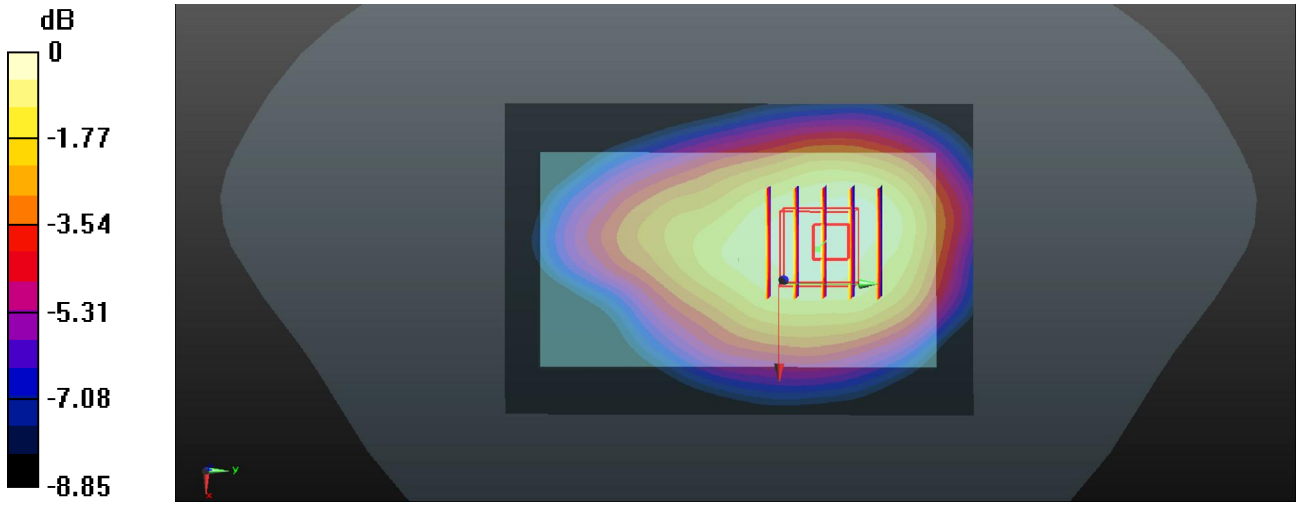

0 dB = 0.380 W/kg

Test Laboratory: Sporton International Inc. SAR/HAC Testing Lab Date: 2014/7/24

#04 LTE Band 5_QPSK_10M(1,0)_Back_1.0cm_Ch20450

Communication System: LTE; Frequency: 829 MHz;Duty Cycle: 1:1
Medium: MSL_835_140724 Medium parameters used: f = 829 MHz; σ = 0.968 S/m; ε_r = 54.156; ρ = 1000 kg/m^3
Ambient Temperature：23.6 ℃; Liquid Temperature ：22.7 ℃

DASY5 Configuration:
- Probe: EX3DV4 - SN3911; ConvF(10.02, 10.02, 10.02); Calibrated: 2014/4/22;
- Sensor-Surface: 2mm (Mechanical Surface Detection)
- Electronics: DAE4 Sn1358; Calibrated: 2014/4/30
- Phantom: SAM2; Type: QD000P40CD; Serial: TP:1754
- Measurement SW: DASY52, Version 52.8 (5); SEMCAD X Version 14.6.8 (7028)

Ch20450/Area Scan (61x91x1): Interpolated grid: dx=15mm, dy=15mm
Maximum value of SAR (interpolated) = 0.627 W/kg

Ch20450/Zoom Scan (5x5x7)/Cube 0: Measurement grid: dx=8mm, dy=8mm, dz=5mm
Reference Value = 21.452 V/m; Power Drift = -0.03 dB
Peak SAR (extrapolated) = 0.672 W/kg
SAR(1 g) = 0.547 W/kg; SAR(10 g) = 0.415 W/kg
Maximum value of SAR (measured) = 0.618 W/kg

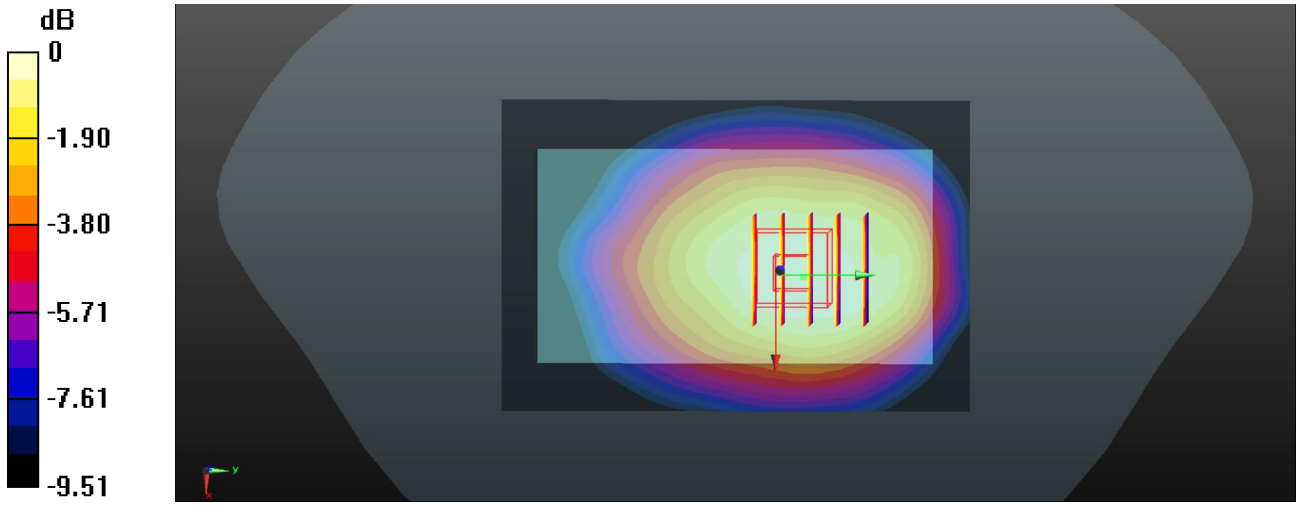

0 dB = 0.618 W/kg

Test Laboratory: Sporton International Inc. SAR/HAC Testing Lab Date: 2014/7/24

#05 LTE Band 4_QPSK_20M(1,0)_Front_1.0cm_Ch20300

Communication System: LTE; Frequency: 1745 MHz;Duty Cycle: 1:1
Medium: MSL_1750_140724 Medium parameters used: f = 1745 MHz; σ = 1.516 S/m; ε_r = 54.446; ρ = 1000 kg/m^3
Ambient Temperature：23.5 ℃; Liquid Temperature ：22.6 ℃

DASY5 Configuration:
- Probe: EX3DV4 - SN3911; ConvF(8.11, 8.11, 8.11); Calibrated: 2014/4/22;
- Sensor-Surface: 2mm (Mechanical Surface Detection)
- Electronics: DAE4 Sn1358; Calibrated: 2014/4/30
- Phantom: SAM1; Type: QD000P40CD; Serial: TP:1753
- Measurement SW: DASY52, Version 52.8 (5); SEMCAD X Version 14.6.8 (7028)

Ch20300/Area Scan (61x91x1): Interpolated grid: dx=15mm, dy=15mm
Maximum value of SAR (interpolated) = 1.02 W/kg

Ch20300/Zoom Scan (5x5x7)/Cube 0: Measurement grid: dx=8mm, dy=8mm, dz=5mm
Reference Value = 14.714 V/m; Power Drift = -0.05 dB
Peak SAR (extrapolated) = 1.18 W/kg
SAR(1 g) = 0.798 W/kg; SAR(10 g) = 0.491 W/kg
Maximum value of SAR (measured) = 0.975 W/kg

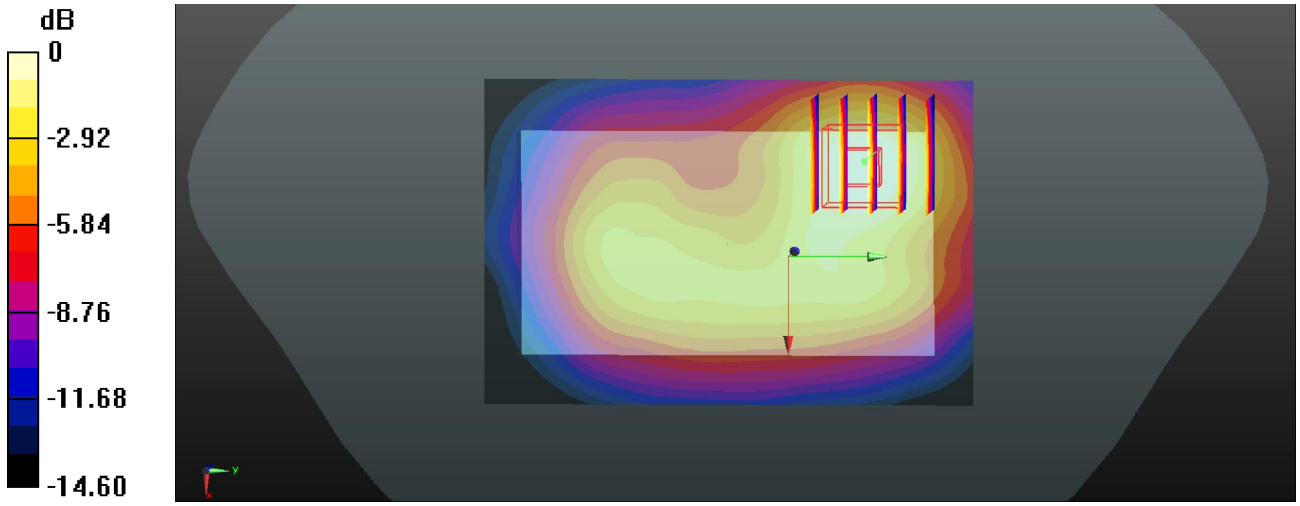

0 dB = 0.975 W/kg

Test Laboratory: Sporton International Inc. SAR/HAC Testing Lab Date: 2014/7/23

#06 LTE Band 2_QPSK_20M(1,0)_Back_1.0cm_Ch18700

Communication System: LTE; Frequency: 1860 MHz;Duty Cycle: 1:1
Medium: MSL_1900_140723 Medium parameters used: f = 1860 MHz; σ = 1.481 S/m; ε_r = 54.05; ρ = 1000 kg/m^3
Ambient Temperature：23.5 ℃; Liquid Temperature ：22.6 ℃

DASY5 Configuration:
- Probe: EX3DV4 - SN3911; ConvF(7.83, 7.83, 7.83); Calibrated: 2014/4/22;
- Sensor-Surface: 2mm (Mechanical Surface Detection)
- Electronics: DAE4 Sn1358; Calibrated: 2014/4/30
- Phantom: SAM2; Type: QD000P40CD; Serial: TP:1754
- Measurement SW: DASY52, Version 52.8 (5); SEMCAD X Version 14.6.8 (7028)

Ch18700/Area Scan (61x91x1): Interpolated grid: dx=15mm, dy=15mm
Maximum value of SAR (interpolated) = 1.16 W/kg

Ch18700/Zoom Scan (5x5x7)/Cube 0: Measurement grid: dx=8mm, dy=8mm, dz=5mm
Reference Value = 11.780 V/m; Power Drift = -0.01 dB
Peak SAR (extrapolated) = 1.30 W/kg
SAR(1 g) = 0.869 W/kg; SAR(10 g) = 0.540 W/kg
Maximum value of SAR (measured) = 1.07 W/kg

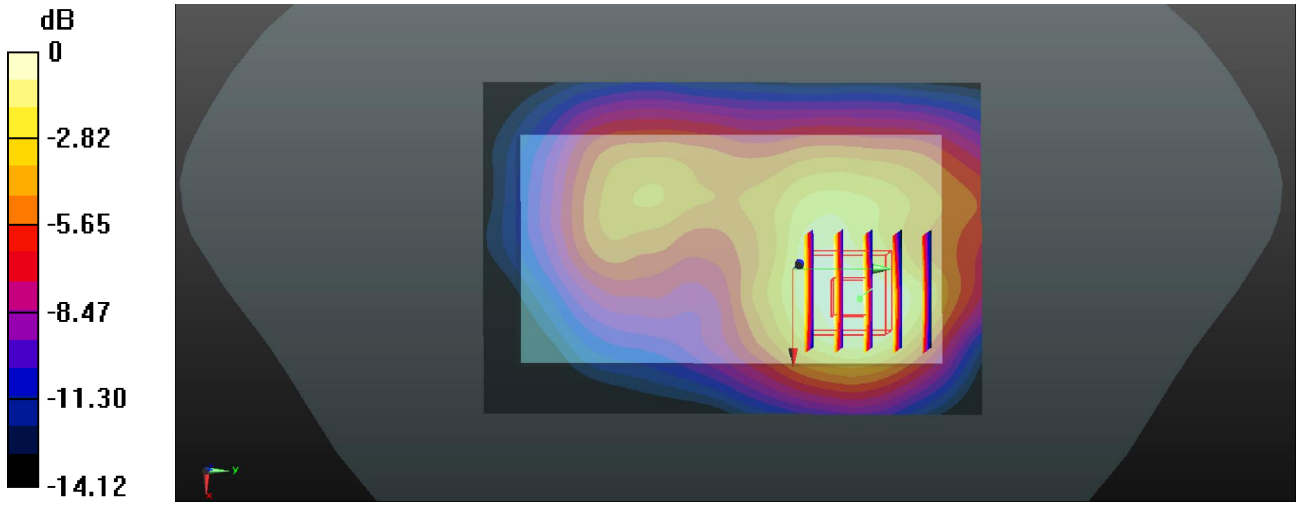

0 dB = 1.07 W/kg

Test Laboratory: Sporton International Inc. SAR/HAC Testing Lab Date: 2014/7/31

#07 WLAN 2.4GHz_802.11b 1Mbps_Top side_1.0cm_Ch6_Ant 1

Communication System: 802.11b; Frequency: 2437 MHz;Duty Cycle: 1:1
Medium: MSL_2450_140731 Medium parameters used: f = 2437 MHz; σ = 1.966 S/m; ε_r = 51.214; ρ = 1000 kg/m^3
Ambient Temperature：23.6 ℃; Liquid Temperature ：22.6 ℃

DASY5 Configuration:
- Probe: EX3DV4 - SN3911; ConvF(7.32, 7.32, 7.32); Calibrated: 2014/4/22;
- Sensor-Surface: 2mm (Mechanical Surface Detection)
- Electronics: DAE4 Sn1358; Calibrated: 2014/4/30
- Phantom: SAM2; Type: QD000P40CD; Serial: TP:1754
- Measurement SW: DASY52, Version 52.8 (5); SEMCAD X Version 14.6.8 (7028)

Ch6/Area Scan (31x111x1): Interpolated grid: dx=12mm, dy=12mm
Maximum value of SAR (interpolated) = 0.130 W/kg

Ch6/Zoom Scan (7x7x7)/Cube 0: Measurement grid: dx=5mm, dy=5mm, dz=5mm
Reference Value = 4.113 V/m; Power Drift = -0.03 dB
Peak SAR (extrapolated) = 0.160 W/kg
SAR(1 g) = 0.091 W/kg; SAR(10 g) = 0.047 W/kg
Maximum value of SAR (measured) = 0.126 W/kg

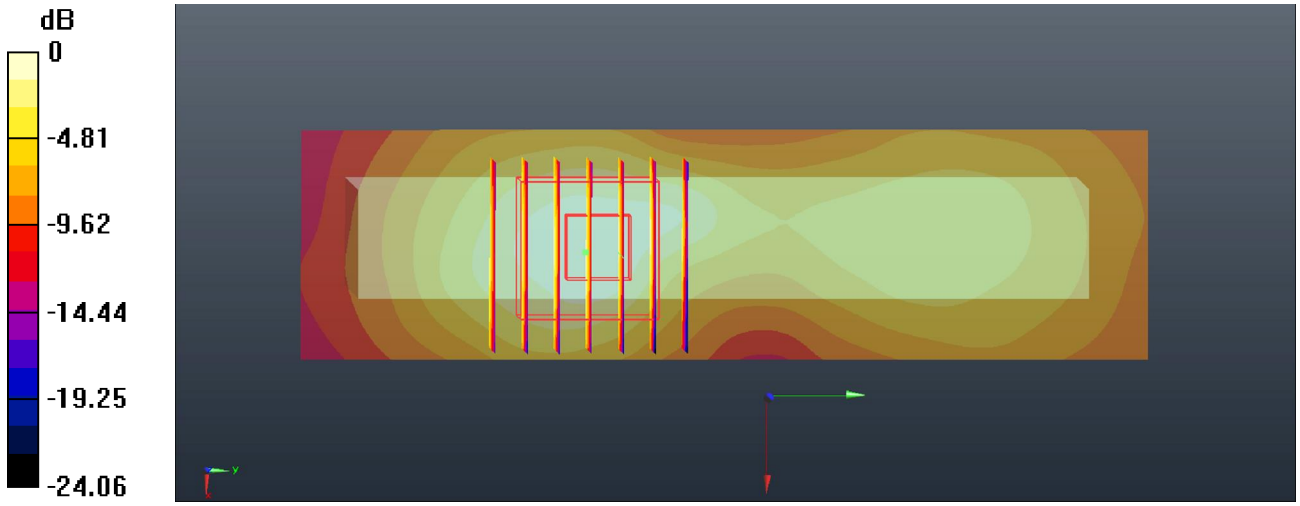

0 dB = 0.126 W/kg

#08 WLAN 5G Band1_802.11n-HT20_MCS8_Bottom Side 1cm_Ch44_Ant.0+1

Communication System: WIFI (0); Frequency: 5220 MHz;Duty Cycle: 1:1.104
Medium: MSL_5000_140818 Medium parameters used: f = 5220 MHz; σ = 5.33 mho/m; ε_r = 49.157; ρ = 1000 kg/m^3
Ambient Temperature：23.3 ℃； Liquid Temperature：22.6 ℃

DASY5 Configuration:
- Probe: EX3DV4 - SN3857; ConvF(4.54, 4.54, 4.54); Calibrated: 2014.05.23
- Sensor-Surface: 1.4mm (Mechanical Surface Detection)
- Electronics: DAE4 Sn1210; Calibrated: 2014.05.19
- Phantom: SAM1; Type: SAM; Serial: TP-1479
- Measurement SW: DASY52, Version 52.8 (8); SEMCAD X Version 14.4.5 (3634)

Ch44/Area Scan (51x141x1): Measurement grid: dx=10mm, dy=10mm
Maximum value of SAR (interpolated) = 1.770 mW/g

Ch44/Zoom Scan (8x8x7)/Cube 0: Measurement grid: dx=4mm, dy=4mm, dz=1.4mm
Reference Value = 0.794 V/m; Power Drift = 0.04 dB
Peak SAR (extrapolated) = 2.333 W/kg
SAR(1 g) = 0.874 mW/g; SAR(10 g) = 0.300 mW/g
Maximum value of SAR (measured) = 1.643 mW/g

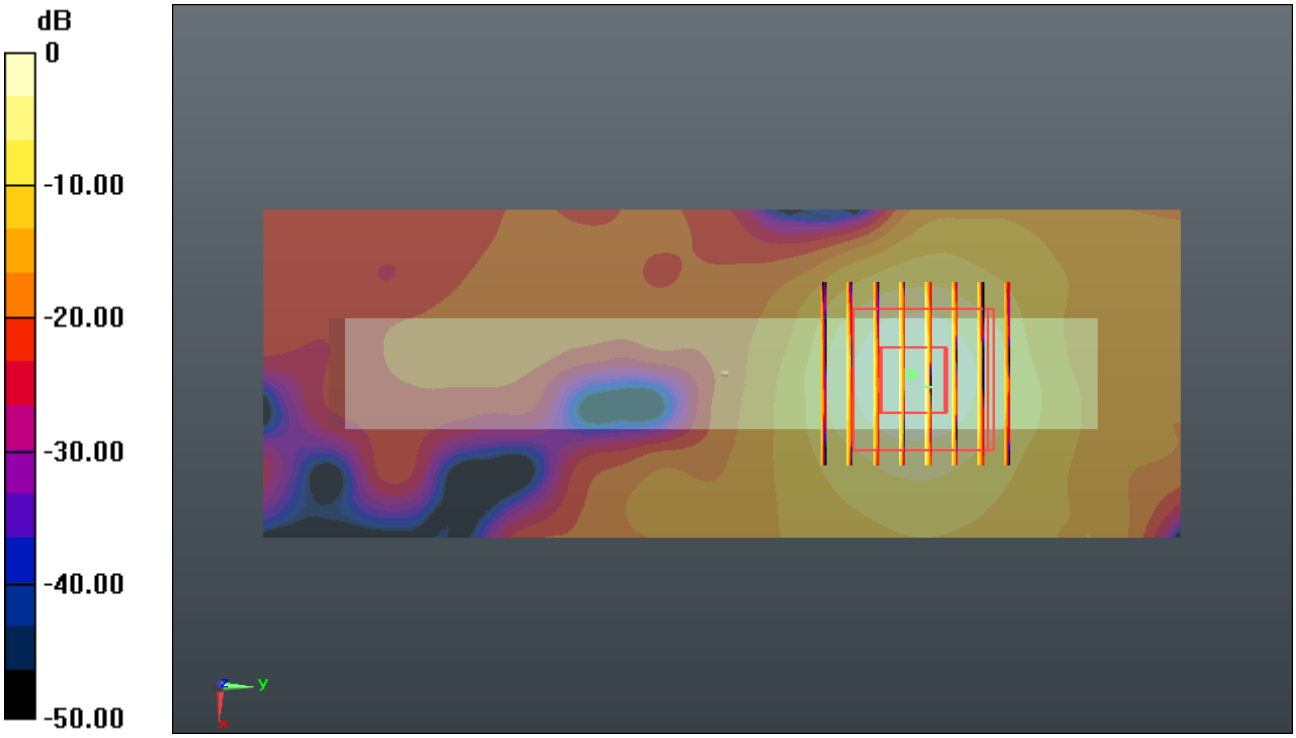

0 dB = 1.640mW/g

Test Laboratory: Sporton International Inc. SAR/HAC Testing Lab Date: 2014.08.18

#09 WLAN 5G Band4_802.11n HT20_MCS8_Bottom Side 1cm_Ch165_Ant.0+1

Communication System: WIFI (0); Frequency: 5825 MHz;Duty Cycle: 1:1.104
Medium: MSL_5000_140818 Medium parameters used: f = 5825 MHz; σ = 6.166 mho/m; ε_r = 47.679; ρ = 1000 kg/m^3
Ambient Temperature：23.3 ℃； Liquid Temperature：22.6 ℃

DASY5 Configuration:
- Probe: EX3DV4 - SN3857; ConvF(4.21, 4.21, 4.21); Calibrated: 2014.05.23
- Sensor-Surface: 1.4mm (Mechanical Surface Detection)
- Electronics: DAE4 Sn1210; Calibrated: 2014.05.19
- Phantom: SAM1; Type: SAM; Serial: TP-1479
- Measurement SW: DASY52, Version 52.8 (8); SEMCAD X Version 14.4.5 (3634)

Ch165/Area Scan (51x141x1): Measurement grid: dx=10mm, dy=10mm
Maximum value of SAR (interpolated) = 1.240 mW/g

Ch165/Zoom Scan (8x8x7)/Cube 0: Measurement grid: dx=4mm, dy=4mm, dz=1.4mm
Reference Value = 0 V/m; Power Drift = 0.11 dB
Peak SAR (extrapolated) = 1.478 W/kg
SAR(1 g) = 0.547 mW/g; SAR(10 g) = 0.185 mW/g
Maximum value of SAR (measured) = 1.069 mW/g

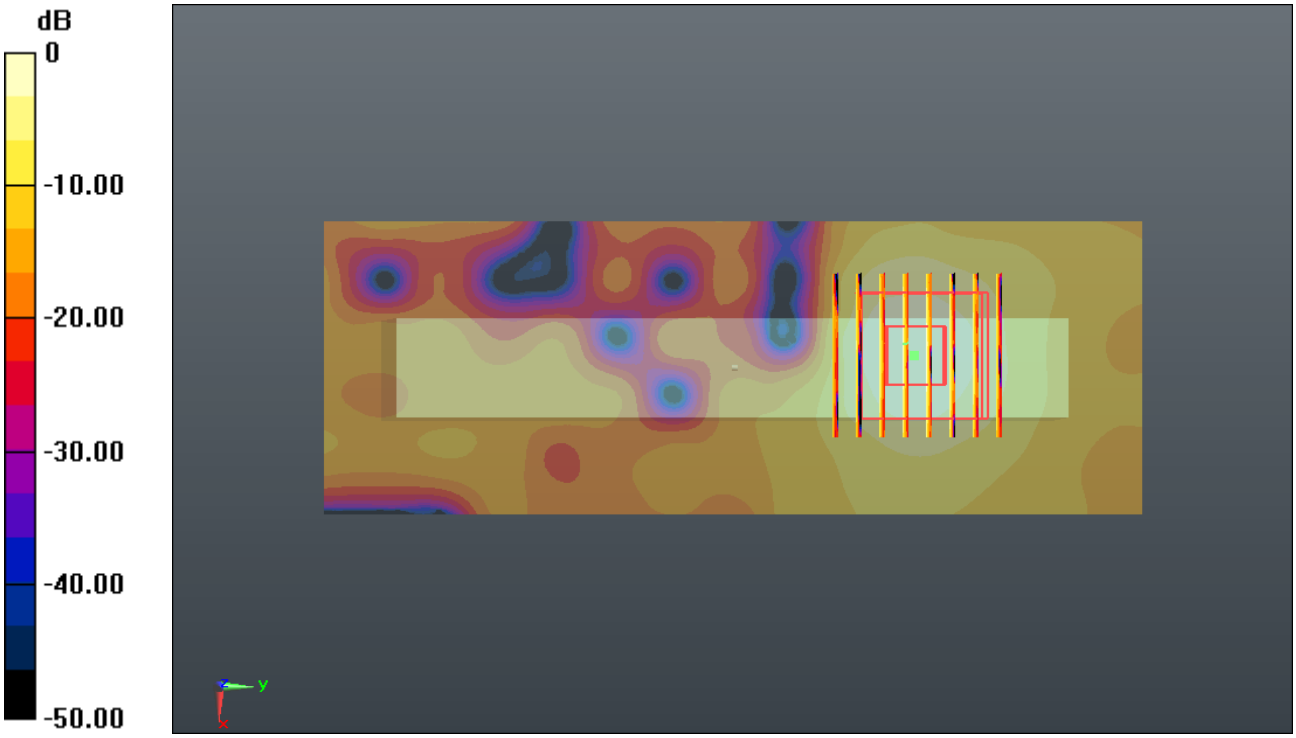

0 dB = 1.070mW/g