FCC SAR Test Report

APPLICANT	:	ZTE CORPORATION
EQUIPMENT	:	LTE uFi
BRAND NAME	:	ZTE
MODEL NAME	:	303ZT, 304ZT, 305ZT
FCC ID	:	SRQ-MF975
STANDARD	:	FCC 47 CFR Part 2 (2.1093) ANSI/IEEE C95.1-1992 IEEE 1528-2003

We, SPORTON INTERNATIONAL (XI'AN) INC., would like to declare that the tested sample has been evaluated in accordance with the procedures and had been in compliance with the applicable technical standards.

The test results in this report apply exclusively to the tested model / sample. Without written approval of SPORTON INTERNATIONAL (XI'AN) INC., the test report shall not be reproduced except in full.

Reviewed by: Eric Huang / Deputy Manager

Approved by: Jones Tsai / Manager

Testing Laboratory 2627

SPORTON INTERNATIONAL (XI'AN) INC.

1F, Building A3, No. 39 Chuangye Rd., Xi'an Hi-tech Zone, Shanxi Province, P.R.C.

Table of Contents

1. Statement of Compliance **4**
2. Administration Data **5**
3. Guidance Standard **5**
4. Equipment Under Test (EUT) **6**
4.1 General Information 6
4.2 Maximum Tune-up Limit 7
5. RF Exposure Limits **8**
5.1 Uncontrolled Environment 8
5.2 Controlled Environment 8
6. Specific Absorption Rate (SAR) **9**
6.1 Introduction 9
6.2 SAR Definition 9
7. System Description and Setup **10**
8. Measurement Procedures **11**
8.1 Spatial Peak SAR Evaluation 11
8.2 Power Reference Measurement 12
8.3 Area Scan 12
8.4 Zoom Scan 13
8.5 Volume Scan Procedures 13
8.6 Power Drift Monitoring 13
9. Test Equipment List **14**
10. System Verification **15**
10.1 Tissue Verification 15
10.2 System Performance Check Results 16
11. RF Exposure Positions **17**
11.1 Body Position 17
12. Conducted RF Output Power (Unit: dBm) **18**
13. Antenna Location **24**
14. SAR Test Results **26**
14.1 Body SAR 27
14.2 Repeated SAR Measurement 28
15. Simultaneous Transmission Analysis **29**
15.1 Body Exposure Conditions 30
16. Uncertainty Assessment **31**
17. References **33**
Appendix A. Plots of System Performance Check
Appendix B. Plots of High SAR Measurement
Appendix C. DASY Calibration Certificate
Appendix D. Test Setup Photos

Revision History

REPORT NO.	VERSION	DESCRIPTION	ISSUED DATE
FA452602	Rev. 01	Initial issue of report	Aug. 28, 2014

1. Statement of Compliance

The maximum results of Specific Absorption Rate (SAR) found during testing for **ZTE CORPORATION, LTE uFi, 303ZT, 304ZT, 305ZT** are as follows.

Equipment Class	Frequency Band	Operating Mode	Highest SAR Summary	
			Body 1g SAR (W/kg) (Gap10mm)	Simultaneous Transmission SAR (W/kg)
PCB	WCDMA Band V	Data	**1.38**	1.52
DTS	WLAN 2.4GHz Band	Data	0.20	1.52
Date of Testing:		06/07/2014 ~ 08/21/2014		

This device is in compliance with Specific Absorption Rate (SAR) for general population/uncontrolled exposure limits (1.6 W/kg) specified in FCC 47 CFR part 2 (2.1093) and ANSI/IEEE C95.1-1992, and had been tested in accordance with the measurement methods and procedures specified in IEEE 1528-2003.

2. Administration Data

Testing Laboratory	
Test Site	SPORTON INTERNATIONAL (XI'AN) INC.
Test Site Location	1F, Building A3, No. 39 Chuangye Rd., Xi'an Hi-tech Zone, Shanxi Province, P. R. C. TEL: +86-029-8860-8767 FAX: +86-029-8860-8791

Applicant	
Company Name	ZTE CORPORATION
Address	ZTE Plaza, Keji Road South, Hi-Tech Industrial Park, Nanshan District, Shenzhen, Guangdong, 518057, P. R. China

Manufacturer	
Company Name	ZTE CORPORATION
Address	ZTE Plaza, Keji Road South, Hi-Tech Industrial Park, Nanshan District, Shenzhen, Guangdong, 518057, P. R. China

3. Guidance Standard

The Specific Absorption Rate (SAR) testing specification, method, and procedure for this device is in accordance with the following standards:

- FCC 47 CFR Part 2 (2.1093)
- ANSI/IEEE C95.1-1992
- IEEE 1528-2003
- FCC KDB 865664 D01 SAR Measurement 100 MHz to 6 GHz v01r03
- FCC KDB 865664 D02 SAR Reporting v01r01
- FCC KDB 447498 D01 General RF Exposure Guidance v05r02
- FCC KDB 248227 D01 SAR meas for 802 11abg v01r02
- FCC KDB 941225 D01 SAR test for 3G devices v02
- FCC KDB 941225 D02 HSPA and 1x Advanced v02r02
- FCC KDB 941225 D06 Hotspot Mode SAR v01r01

4. Equipment Under Test (EUT)

4.1 General Information

Product Feature & Specification	
Equipment Name	LTE uFi
Brand Name	ZTE
Model Name	303ZT, 304ZT, 305ZT
FCC ID	SRQ-MF975
Wireless Technology and Frequency Range	WCDMA Band V: 826.4 MHz ~ 846.6 MHz WLAN 2.4GHz Band: 2412 MHz ~ 2462 MHz
Mode	• RMC 12.2Kbps • HSDPA • HSUPA • HSPA+ (Downlink Only) • 802.11b/g/n HT20/HT40
HW Version	xw3B
SW Version	SBM_JP_MF975V0.0.0B01
EUT Stage	Identical Prototype

Remark:
1. This device 2.4GHz WLAN supports Hotspot operation.
2. This device has no voice function.

4.2 Maximum Tune-up Limit

Mode	Average power(dBm)
	WCDMA Band V
RMC 12.2Kbps	23.5
HSDPA Subtest-1	22.0
HSDPA Subtest-2	22.0
HSDPA Subtest-3	22.0
HSDPA Subtest-4	22.0
HSUPA Subtest-1	22.0
HSUPA Subtest-2	22.0
HSUPA Subtest-3	22.0
HSUPA Subtest-4	22.0
HSUPA Subtest-5	22.0

Mode		Maximum Average Power (dBm)
2.4GHz	802.11b for Ant.0	15.5
	802.11b for Ant.1	15.5
	802.11g for Ant.0	15.5
	802.11g for Ant.1	15.5
	802.11n-HT20 for Ant.0	14.5
	802.11n-HT20 for Ant.1	14.5
	802.11n-HT20 for Ant.0+1(0)	11.5
	802.11n-HT20 for Ant.0+1(1)	11.5
	802.11n-HT20 for Ant.0+1	14.5
	802.11n-HT40 for Ant.0	14
	802.11n-HT40 for Ant.1	14
	802.11n-HT40 for Ant.0+1(0)	11.0
	802.11n-HT40 for Ant.0+1(1)	10.0
	802.11n-HT40 for Ant.0+1	13.5

5. RF Exposure Limits

5.1 Uncontrolled Environment

Uncontrolled Environments are defined as locations where there is the exposure of individuals who have no knowledge or control of their exposure. The general population/uncontrolled exposure limits are applicable to situations in which the general public may be exposed or in which persons who are exposed as a consequence of their employment may not be made fully aware of the potential for exposure or cannot exercise control over their exposure. Members of the general public would come under this category when exposure is not employment-related; for example, in the case of a wireless transmitter that exposes persons in its vicinity.

5.2 Controlled Environment

Controlled Environments are defined as locations where there is exposure that may be incurred by persons who are aware of the potential for exposure, (i.e. as a result of employment or occupation). In general, occupational/controlled exposure limits are applicable to situations in which persons are exposed as a consequence of their employment, who have been made fully aware of the potential for exposure and can exercise control over their exposure. The exposure category is also applicable when the exposure is of a transient nature due to incidental passage through a location where the exposure levels may be higher than the general population/uncontrolled limits, but the exposed person is fully aware of the potential for exposure and can exercise control over his or her exposure by leaving the area or by some other appropriate means.

Limits for Occupational/Controlled Exposure (W/kg)

Whole-Body	Partial-Body	Hands, Wrists, Feet and Ankles
0.4	8.0	20.0

Limits for General Population/Uncontrolled Exposure (W/kg)

Whole-Body	Partial-Body	Hands, Wrists, Feet and Ankles
0.08	1.6	4.0

1. Whole-Body SAR is averaged over the entire body, partial-body SAR is averaged over any 1gram of tissue defined as a tissue volume in the shape of a cube. SAR for hands, wrists, feet and ankles is averaged over any 10 grams of tissue defined as a tissue volume in the shape of a cube.

6. Specific Absorption Rate (SAR)

6.1 Introduction

SAR is related to the rate at which energy is absorbed per unit mass in an object exposed to a radio field. The SAR distribution in a biological body is complicated and is usually carried out by experimental techniques or numerical modeling. The standard recommends limits for two tiers of groups, occupational/controlled and general population/uncontrolled, based on a person's awareness and ability to exercise control over his or her exposure. In general, occupational/controlled exposure limits are higher than the limits for general population/uncontrolled.

6.2 SAR Definition

The SAR definition is the time derivative (rate) of the incremental energy (dW) absorbed by (dissipated in) an incremental mass (dm) contained in a volume element (dv) of a given density (ρ). The equation description is as below:

$$\mathbf{SAR} = \frac{\mathbf{d}}{\mathbf{dt}}\left(\frac{\mathbf{dW}}{\mathbf{dm}}\right) = \frac{\mathbf{d}}{\mathbf{dt}}\left(\frac{\mathbf{dW}}{\boldsymbol{\rho}\mathbf{dv}}\right)$$

SAR is expressed in units of Watts per kilogram (W/kg)

$$\mathbf{SAR} = \frac{\boldsymbol{\sigma}|\mathbf{E}|^{\mathbf{2}}}{\boldsymbol{\rho}}$$

Where: σ is the conductivity of the tissue, ρ is the mass density of the tissue and E is the RMS electrical field strength.

7. System Description and Setup

The DASY system used for performing compliance tests consists of the following items:

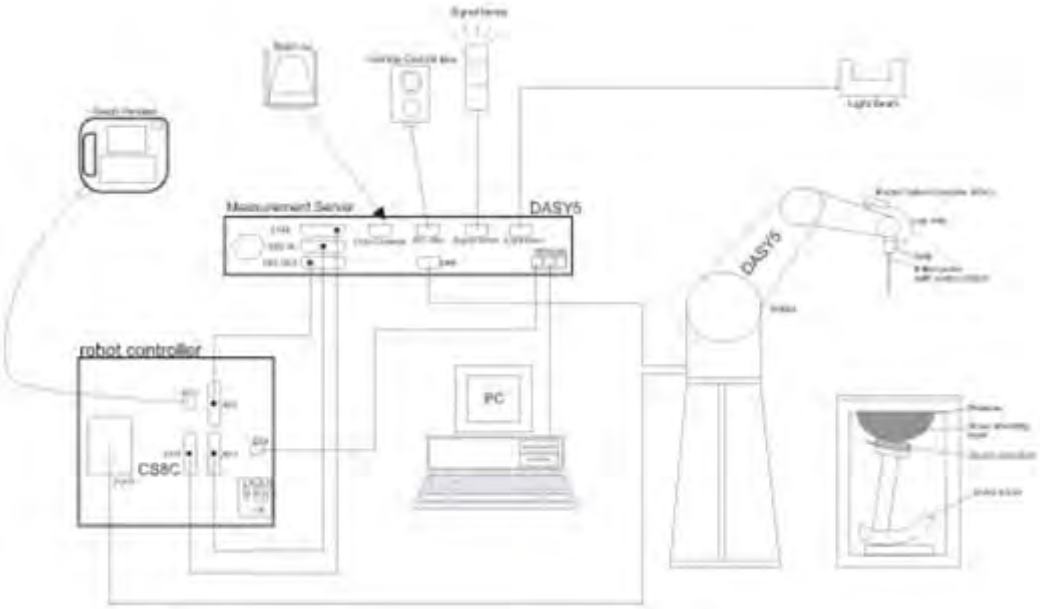

- A standard high precision 6-axis robot with controller, teach pendant and software. An arm extension for accommodating the data acquisition electronics (DAE).
- An isotropic Field probe optimized and calibrated for the targeted measurement.
- A data acquisition electronics (DAE) which performs the signal amplification, signal multiplexing, AD-conversion, offset measurements, mechanical surface detection, collision detection, etc. The unit is battery powered with standard or rechargeable batteries. The signal is optically transmitted to the EOC.
- The Electro-optical converter (EOC) performs the conversion from optical to electrical signals for the digital communication to the DAE. To use optical surface detection, a special version of the EOC is required. The EOC signal is transmitted to the measurement server.
- The function of the measurement server is to perform the time critical tasks such as signal filtering, control of the robot operation and fast movement interrupts.
- The Light Beam used is for probe alignment. This improves the (absolute) accuracy of the probe positioning.
- A computer running WinXP or Win7 and the DASY5 software.
- Remote control and teach pendant as well as additional circuitry for robot safety such as warning lamps, etc.
- The phantom, the device holder and other accessories according to the targeted measurement.

8. Measurement Procedures

The measurement procedures are as follows:

<Conducted power measurement>

(a) For WWAN power measurement, use base station simulator to configure EUT WWAN transmission in conducted connection with RF cable, at maximum power in each supported wireless interface and frequency band.
(b) Read the WWAN RF power level from the base station simulator.
(c) For WLAN power measurement, use engineering software to configure EUT WLAN continuously transmission, at maximum RF power in each supported wireless interface and frequency band
(d) Connect EUT RF port through RF cable to the power meter, and measure WLAN output power

<SAR measurement>

(a) Use base station simulator to configure EUT WWAN transmission in radiated connection, and engineering software to configure EUT WLAN continuously transmission, at maximum RF power, in the highest power channel.
(b) Place the EUT in the positions as Appendix D demonstrates.
(c) Set scan area, grid size and other setting on the DASY software.
(d) Measure SAR results for the highest power channel on each testing position.
(e) Find out the largest SAR result on these testing positions of each band
(f) Measure SAR results for other channels in worst SAR testing position if the reported SAR of highest power channel is larger than 0.8 W/kg

According to the test standard, the recommended procedure for assessing the peak spatial-average SAR value consists of the following steps:

(a) Power reference measurement
(b) Area scan
(c) Zoom scan
(d) Power drift measurement

8.1 Spatial Peak SAR Evaluation

The procedure for spatial peak SAR evaluation has been implemented according to the test standard. It can be conducted for 1g and 10g, as well as for user-specific masses. The DASY software includes all numerical procedures necessary to evaluate the spatial peak SAR value.

The base for the evaluation is a "cube" measurement. The measured volume must include the 1g and 10g cubes with the highest averaged SAR values. For that purpose, the center of the measured volume is aligned to the interpolated peak SAR value of a previously performed area scan.

The entire evaluation of the spatial peak values is performed within the post-processing engine (SEMCAD). The system always gives the maximum values for the 1g and 10g cubes. The algorithm to find the cube with highest averaged SAR is divided into the following stages:

(a) Extraction of the measured data (grid and values) from the Zoom Scan
(b) Calculation of the SAR value at every measurement point based on all stored data (A/D values and measurement parameters)
(c) Generation of a high-resolution mesh within the measured volume
(d) Interpolation of all measured values form the measurement grid to the high-resolution grid
(e) Extrapolation of the entire 3-D field distribution to the phantom surface over the distance from sensor to surface
(f) Calculation of the averaged SAR within masses of 1g and 10g

8.2 Power Reference Measurement

The Power Reference Measurement and Power Drift Measurements are for monitoring the power drift of the device under test in the batch process. The minimum distance of probe sensors to surface determines the closest measurement point to phantom surface. This distance cannot be smaller than the distance of sensor calibration points to probe tip as defined in the probe properties.

8.3 Area Scan

The area scan is used as a fast scan in two dimensions to find the area of high field values, before doing a fine measurement around the hot spot. The sophisticated interpolation routines implemented in DASY software can find the maximum found in the scanned area, within a range of the global maximum. The range (in dB0 is specified in the standards for compliance testing. For example, a 2 dB range is required in IEEE standard 1528 and IEC 62209 standards, whereby 3 dB is a requirement when compliance is assessed in accordance with the ARIB standard (Japan), if only one zoom scan follows the area scan, then only the absolute maximum will be taken as reference. For cases where multiple maximums are detected, the number of zoom scans has to be increased accordingly.

Area scan parameters extracted from FCC KDB 865664 D01v01r03 SAR measurement 100 MHz to 6 GHz.

	≤ 3 GHz	> 3 GHz
Maximum distance from closest measurement point (geometric center of probe sensors) to phantom surface	5 ± 1 mm	½·δ·ln(2) ± 0.5 mm
Maximum probe angle from probe axis to phantom surface normal at the measurement location	30° ± 1°	20° ± 1°
Maximum area scan spatial resolution: Δx_{Area}, Δy_{Area}	≤ 2 GHz: ≤ 15 mm 2 – 3 GHz: ≤ 12 mm	3 – 4 GHz: ≤ 12 mm 4 – 6 GHz: ≤ 10 mm
	When the x or y dimension of the test device, in the measurement plane orientation, is smaller than the above, the measurement resolution must be ≤ the corresponding x or y dimension of the test device with at least one measurement point on the test device.	

8.4 Zoom Scan

Zoom scans are used assess the peak spatial SAR values within a cubic averaging volume containing 1 gram and 10 gram of simulated tissue. The zoom scan measures points (refer to table below) within a cube shoes base faces are centered on the maxima found in a preceding area scan job within the same procedure. When the measurement is done, the zoom scan evaluates the averaged SAR for 1 gram and 10 gram and displays these values next to the job's label.

Zoom scan parameters extracted from FCC KDB 865664 D01v01r03 SAR measurement 100 MHz to 6 GHz.

			≤ 3 GHz	> 3 GHz
Maximum zoom scan spatial resolution: Δx_{Zoom}, Δy_{Zoom}			≤ 2 GHz: ≤ 8 mm 2 – 3 GHz: ≤ 5 mm*	3 – 4 GHz: ≤ 5 mm* 4 – 6 GHz: ≤ 4 mm*
Maximum zoom scan spatial resolution, normal to phantom surface	uniform grid: $\Delta z_{Zoom}(n)$		≤ 5 mm	3 – 4 GHz: ≤ 4 mm 4 – 5 GHz: ≤ 3 mm 5 – 6 GHz: ≤ 2 mm
	graded grid	$\Delta z_{Zoom}(1)$: between 1st two points closest to phantom surface	≤ 4 mm	3 – 4 GHz: ≤ 3 mm 4 – 5 GHz: ≤ 2.5 mm 5 – 6 GHz: ≤ 2 mm
		$\Delta z_{Zoom}(n>1)$: between subsequent points	$\leq 1.5 \cdot \Delta z_{Zoom}(n-1)$	
Minimum zoom scan volume	x, y, z		≥ 30 mm	3 – 4 GHz: ≥ 28 mm 4 – 5 GHz: ≥ 25 mm 5 – 6 GHz: ≥ 22 mm

Note: δ is the penetration depth of a plane-wave at normal incidence to the tissue medium; see draft standard IEEE P1528-2011 for details.

* When zoom scan is required and the *reported* SAR from the *area scan based 1-g SAR estimation* procedures of KDB 447498 is ≤ 1.4 W/kg, ≤ 8 mm, ≤ 7 mm and ≤ 5 mm zoom scan resolution may be applied, respectively, for 2 GHz to 3 GHz, 3 GHz to 4 GHz and 4 GHz to 6 GHz.

8.5 Volume Scan Procedures

The volume scan is used for assess overlapping SAR distributions for antennas transmitting in different frequency bands. It is equivalent to an oversized zoom scan used in standalone measurements. The measurement volume will be used to enclose all the simultaneous transmitting antennas. For antennas transmitting simultaneously in different frequency bands, the volume scan is measured separately in each frequency band. In order to sum correctly to compute the 1g aggregate SAR, the EUT remain in the same test position for all measurements and all volume scan use the same spatial resolution and grid spacing. When all volume scan were completed, the software, SEMCAD postprocessor can combine and subsequently superpose these measurement data to calculating the multiband SAR.

8.6 Power Drift Monitoring

All SAR testing is under the EUT install full charged battery and transmit maximum output power. In DASY measurement software, the power reference measurement and power drift measurement procedures are used for monitoring the power drift of EUT during SAR test. Both these procedures measure the field at a specified reference position before and after the SAR testing. The software will calculate the field difference in dB. If the power drifts more than 5%, the SAR will be retested.

9. Test Equipment List

Manufacturer	Name of Equipment	Type/Model	Serial Number	Calibration	
				Last Cal.	Due Date
SPEAG	835MHz System Validation Kit	D835V2	4d151	Mar. 25, 2013	Mar. 23, 2015
SPEAG	2450MHz System Validation Kit	D2450V2	908	Mar. 26, 2013	Mar. 24, 2015
SPEAG	Data Acquisition Electronics	DAE4	1353	Jan. 30, 2014	Jan. 29, 2015
SPEAG	Data Acquisition Electronics	DAE4	1210	May 19, 2014	May 18, 2015
SPEAG	Dosimetric E-Field Probe	EX3DV4	3898	Mar. 10, 2014	Mar. 09, 2015
SPEAG	Dosimetric E-Field Probe	EX3DV4	3857	May 23, 2014	May 22, 2015
SPEAG	SAM Twin Phantom	QD 000 P40 CD	TP-1753	NCR	NCR
SPEAG	SAM Twin Phantom	QD 000 P40 CB	TP-1479	NCR	NCR
SPEAG	Phone Positioner	N/A	N/A	NCR	NCR
Agilent	Wireless Communication Test Set	E5515C	MY52102600	Dec. 30, 2013	Dec. 29, 2014
Agilent	ENA Series Network Analyzer	E5071C	MY46111157	Dec. 30, 2013	Dec. 29, 2014
Agilent	Dielectric Probe Kit	85070E	MY44300751	NCR	NCR
Anritsu	Power Meter	ML2495A	1005002	Feb. 27, 2014	Feb. 26, 2015
Anritsu	Power Sensor	MA2411B	917070	Feb. 27, 2014	Feb. 26, 2015
AR	Amplifier	5S1G4	342137	NCR	NCR
R&S	Spectrum Analyzer	FSP7	101045	Dec. 30, 2013	Dec. 29, 2014
Agilent	Dual Directional Coupler	778D	50422	Note 1	
Woken	Attenuator	WK0602-XX	N/A	Note 1	
PE	Attenuator	PE7005-10	N/A	Note 1	
PE	Attenuator	PE7005- 3	N/A	Note 1	
AR	Power Amplifier	5S1G4M2	0328767	Note 1	
Mini-Circuits	Power Amplifier	ZVE-3W	162601250	Note 1	
Mini-Circuits	Power Amplifier	ZHL-42W+	13440021344	Note 1	

General Note:

1. Prior to system verification and validation, the path loss from the signal generator to the system check source and the power meter, which includes the amplifier, cable, attenuator and directional coupler, was measured by the network analyzer. The reading of the power meter was offset by the path loss difference between the path to the power meter and the path to the system check source to monitor the actual power level fed to the system check source.
2. Referring to KDB 865664 D01v01r03, the dipole calibration interval can be extended to 3 years with justification. The dipoles are also not physically damaged, or repaired during the interval.
3. The justification data of dipole D835V2, SN: 4d151, D2450V2, SN: 908 can be found in appendix C. The return loss is < -20dB, within 20% of prior calibration, the impedance is within 5 ohm of prior calibration.

10. System Verification

10.1 Tissue Verification

The following tissue formulations are provided for reference only as some of the parameters have not been thoroughly verified. The composition of ingredients may be modified accordingly to achieve the desired target tissue parameters required for routine SAR evaluation.

Frequency (MHz)	Water (%)	Sugar (%)	Cellulose (%)	Salt (%)	Preventol (%)	DGBE (%)	Conductivity (σ)	Permittivity (εr)
For Body								
835	50.8	48.2	0	0.9	0.1	0	0.97	55.2
2450	68.6	0	0	0	0	31.4	1.95	52.7

<Tissue Dielectric Parameter Check Results>

Frequency (MHz)	Tissue Type	Liquid Temp. (℃)	Conductivity (σ)	Permittivity (ε_r)	Conductivity Target (σ)	Permittivity Target (ε_r)	Delta (σ) (%)	Delta (ε_r) (%)	Limit (%)	Date
835	Body	22.5	0.974	54.111	0.97	55.20	0.41	-1.97	±5	2014/06/07
2450	Body	22.6	1.943	50.971	1.95	52.70	-0.36	-3.28	±5	2014/08/21

10.2 System Performance Check Results

Comparing to the original SAR value provided by SPEAG, the verification data should be within its specification of 10 %. Below table shows the target SAR and measured SAR after normalized to 1W input power. The table below indicates the system performance check can meet the variation criterion and the plots can be referred to Appendix A of this report.

Date	Frequency (MHz)	Tissue Type	Input Power (mW)	Dipole S/N	Probe S/N	DAE S/N	Measured SAR (W/kg)	Targeted SAR (W/kg)	Normalized SAR (W/kg)	Deviation (%)
2014/06/07	835	Body	250	4d151	3898	1353	2.23	9.43	8.92	-5.41
2014/08/21	2450	Body	250	908	3857	1210	12.30	50.40	49.2	-2.38

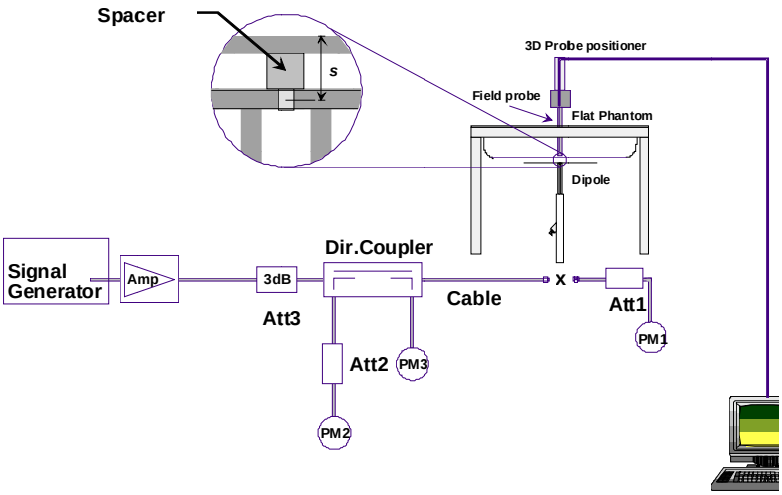

Fig 8.3.1 System Performance Check Setup

Fig 8.3.2 Setup Photo

11. RF Exposure Positions

11.1 Body Position

(a) To position the device parallel to the phantom surface with all sides and either keypad up or down.
(b) To adjust the device parallel to the flat phantom.
(c) To adjust the distance between the device and the flat phantom to 1 cm.

<EUT Setup Photos>

Please refer to Appendix D for the test setup photos.

12. Conducted RF Output Power (Unit: dBm)

<WCDMA Conducted Power>

1. The following tests were conducted according to the test requirements outlines in 3GPP TS 34.121 specification.
2. The procedures in KDB 941225 D01 are applied for 3GPP Rel. 6 HSPA to configure the device in the required sub-test mode(s) to determine SAR test exclusion.

A summary of these settings are illustrated below:

HSDPA Setup Configuration:

a. The EUT was connected to Base Station Agilent E5515C referred to the Setup Configuration.
b. The RF path losses were compensated into the measurements.
c. A call was established between EUT and Base Station with following setting:
   i. Set Gain Factors (β_c and β_d) and parameters were set according to each
   ii. Specific sub-test in the following table, C10.1.4, quoted from the TS 34.121
   iii. Set RMC 12.2Kbps + HSDPA mode.
   iv. Set Cell Power = -86 dBm
   v. Set HS-DSCH Configuration Type to FRC (H-set 1, QPSK)
   vi. Select HSDPA Uplink Parameters
   vii. Set Delta ACK, Delta NACK and Delta CQI = 8
   viii. Set Ack-Nack Repetition Factor to 3
   ix. Set CQI Feedback Cycle (k) to 4 ms
   x. Set CQI Repetition Factor to 2
   xi. Power Ctrl Mode = All Up bits
d. The transmitted maximum output power was recorded.

Table C.10.1.4: β values for transmitter characteristics tests with HS-DPCCH

Sub-test	β_c	β_d	β_d (SF)	β_c/β_d	β_{HS} (Note1, Note 2)	CM (dB) (Note 3)	MPR (dB) (Note 3)
1	2/15	15/15	64	2/15	4/15	0.0	0.0
2	12/15 (Note 4)	15/15 (Note 4)	64	12/15 (Note 4)	24/15	1.0	0.0
3	15/15	8/15	64	15/8	30/15	1.5	0.5
4	15/15	4/15	64	15/4	30/15	1.5	0.5

Note 1: Δ_{ACK}, Δ_{NACK} and Δ_{CQI} = 30/15 with $\beta_{hs} = 30/15 * \beta_c$.

Note 2: For the HS-DPCCH power mask requirement test in clause 5.2C, 5.7A, and the Error Vector Magnitude (EVM) with HS-DPCCH test in clause 5.13.1A, and HSDPA EVM with phase discontinuity in clause 5.13.1AA, Δ_{ACK} and Δ_{NACK} = 30/15 with $\beta_{hs} = 30/15 * \beta_c$, and Δ_{CQI} = 24/15 with $\beta_{hs} = 24/15 * \beta_c$.

Note 3: CM = 1 for β_c/β_d =12/15, β_{hs}/β_c=24/15. For all other combinations of DPDCH, DPCCH and HS-DPCCH the MPR is based on the relative CM difference. This is applicable for only UEs that support HSDPA in release 6 and later releases.

Note 4: For subtest 2 the β_c/β_d ratio of 12/15 for the TFC during the measurement period (TF1, TF0) is achieved by setting the signalled gain factors for the reference TFC (TF1, TF1) to β_c = 11/15 and β_d = 15/15.

Setup Configuration

HSUPA Setup Configuration:

a. The EUT was connected to Base Station Agilent E5515C referred to the Setup Configuration.
b. The RF path losses were compensated into the measurements.
c. A call was established between EUT and Base Station with following setting * :
   i. Call Configs = 5.2B, 5.9B, 5.10B, and 5.13.2B with QPSK
   ii. Set the Gain Factors (β_c and β_d) and parameters (AG Index) were set according to each specific sub-test in the following table, C11.1.3, quoted from the TS 34.121
   iii. Set Cell Power = -86 dBm
   iv. Set Channel Type = 12.2k + HSPA
   v. Set UE Target Power
   vi. Power Ctrl Mode= Alternating bits
   vii. Set and observe the E-TFCI
   viii. Confirm that E-TFCI is equal to the target E-TFCI of 75 for sub-test 1, and other subtest's E-TFCI
d. The transmitted maximum output power was recorded.

Table C.11.1.3: β values for transmitter characteristics tests with HS-DPCCH and E-DCH

Sub-test	β_c	β_d	β_d (SF)	β_c/β_d	β_{HS} (Note1)	β_{ec}	β_{ed} (Note 5) (Note 6)	β_{ed} (SF)	β_{ed} (Codes)	CM (dB) (Note 2)	MPR (dB) (Note 2)	AG Index (Note 6)	E-TFCI
1	11/15 (Note 3)	15/15 (Note 3)	64	11/15 (Note 3)	22/15	209/225	1309/225	4	1	1.0	0.0	20	75
2	6/15	15/15	64	6/15	12/15	12/15	94/75	4	1	3.0	2.0	12	67
3	15/15	9/15	64	15/9	30/15	30/15	β_{ed}1: 47/15 β_{ed}2: 47/15	4 4	2	2.0	1.0	15	92
4	2/15	15/15	64	2/15	4/15	2/15	56/75	4	1	3.0	2.0	17	71
5	15/15 (Note 4)	15/15 (Note 4)	64	15/15 (Note 4)	30/15	24/15	134/15	4	1	1.0	0.0	21	81

Note 1: Δ_{ACK}, Δ_{NACK} and Δ_{CQI} = 30/15 with β_{hs} = 30/15 * β_c .

Note 2: CM = 1 for β_c/β_d =12/15, β_{hs}/β_c=24/15. For all other combinations of DPDCH, DPCCH, HS- DPCCH, E-DPDCH and E-DPCCH the MPR is based on the relative CM difference.

Note 3: For subtest 1 the β_c/β_d ratio of 11/15 for the TFC during the measurement period (TF1, TF0) is achieved by setting the signalled gain factors for the reference TFC (TF1, TF1) to β_c = 10/15 and β_d = 15/15.

Note 4: For subtest 5 the β_c/β_d ratio of 15/15 for the TFC during the measurement period (TF1, TF0) is achieved by setting the signalled gain factors for the reference TFC (TF1, TF1) to β_c = 14/15 and β_d = 15/15.

Note 5: In case of testing by UE using E-DPDCH Physical Layer category 1, Sub-test 3 is omitted according to TS25.306 Table 5.1g.

Note 6: β_{ed} can not be set directly, it is set by Absolute Grant Value.

Setup Configuration

<WCDMA Conducted Power>

General Note:

1. Per KDB 941225 D02v02r02, RMC 12.2kbps setting is used to evaluate SAR. If HSDPA/HSUPA output power is < 0.25dB higher than RMC, or reported SAR with RMC 12.2kbps setting is ≤ 1.2W/kg, HSDPA/HSUPA SAR evaluation can be excluded.

Band			WCDMA V		
TX Channel			4132	4182	4233
Rx Channel			4357	4407	4458
Frequency (MHz)			826.4	836.4	846.6
MPR (dB)	3GPP Rel 99	RMC 12.2Kbps	**22.88**	22.82	22.68
0	3GPP Rel 6	HSDPA Subtest-1	21.78	21.76	21.57
0	3GPP Rel 6	HSDPA Subtest-2	21.74	21.70	21.55
0.5	3GPP Rel 6	HSDPA Subtest-3	21.63	21.58	21.49
0.5	3GPP Rel 6	HSDPA Subtest-4	21.62	21.54	21.44
0	3GPP Rel 6	HSUPA Subtest-1	21.52	21.38	21.30
2	3GPP Rel 6	HSUPA Subtest-2	21.09	20.98	20.84
1	3GPP Rel 6	HSUPA Subtest-3	21.23	21.11	21.04
2	3GPP Rel 6	HSUPA Subtest-4	21.12	21.03	20.96
0	3GPP Rel 6	HSUPA Subtest-5	21.47	21.38	21.29

<WLAN Conducted Power>

General Note:

1. Per KDB 248227, SAR for MIMO was measured with both transmitting simultaneously and was evaluated in dependently of SISO operation.
2. For 2.4GHz WLAN SISO SAR testing, highest average RF output power channel for the lowest data rate for 802.11b were selected for SAR evaluation. 802.11g/n HT20/HT40 were not investigated since the average output powers over all channels and data rates were not more than 0.25 dB higher than the tested channel in the lowest data rate of 802.11b mode.
3. For 2.4GHz WLAN MIMO mode SAR testing, highest average RF output power channel for the lowest data rate for 802.11n HT20 were selected for SAR evaluation.

<2.4GHz WLAN Antenna 0>

WLAN 2.4GHz 802.11b Average Power (dBm)					
Power vs. Channel			Power vs. Data Rate		
Channel	Frequency (MHz)	Data Rate 1Mbps	2Mbps	5.5Mbps	11Mbps
CH 1	2412	**15.19**	15.11	15.10	15.13
CH 6	2437	14.96			
CH 11	2462	14.57			

WLAN 2.4GHz 802.11g Average Power (dBm)									
Power vs. Channel			Power vs. Data Rate						
Channel	Frequency (MHz)	Data Rate 6Mbps	9Mbps	12Mbps	18Mbps	24Mbps	36Mbps	48Mbps	54Mbps
CH 1	2412	**15.17**	14.97	14.96	15.15	15.06	15.04	15.13	15.14
CH 6	2437	14.73							
CH 11	2462	14.49							

WLAN 2.4GHz 802.11n-HT20 Average Power (dBm)									
Power vs. Channel			Power vs. MCS Index						
Channel	Frequency (MHz)	MCS Index MCS0	MCS1	MCS2	MCS3	MCS4	MCS5	MCS6	MCS7
CH 1	2412	**14.26**	13.84	13.80	14.07	14.03	14.23	14.21	14.25
CH 6	2437	13.96							
CH 11	2462	13.43							

WLAN 2.4GHz 802.11n-HT40 Average Power (dBm)									
Power vs. Channel			Power vs. MCS Index						
Channel	Frequency (MHz)	MCS Index MCS0	MCS1	MCS2	MCS3	MCS4	MCS5	MCS6	MCS7
CH 3	2422	13.32	13.59	13.57	13.56	13.53	13.66	13.48	13.44
CH 6	2437	13.62							
CH 9	2452	**13.67**							

<2.4GHz WLAN Antenna 1>

WLAN 2.4GHz 802.11b Average Power (dBm)					
Power vs. Channel			Power vs. Data Rate		
Channel	Frequency (MHz)	Data Rate 1Mbps	2Mbps	5.5Mbps	11Mbps
CH 1	2412	**15.05**	15.04	15.03	14.93
CH 6	2437	14.80			
CH 11	2462	14.08			

WLAN 2.4GHz 802.11g Average Power (dBm)									
Power vs. Channel			Power vs. Data Rate						
Channel	Frequency (MHz)	Data Rate 6Mbps	9Mbps	12Mbps	18Mbps	24Mbps	36Mbps	48Mbps	54Mbps
CH 1	2412	**15.18**	15.05	14.99	15.03	15.00	15.11	15.08	15.15
CH 6	2437	14.86							
CH 11	2462	14.07							

WLAN 2.4GHz 802.11n-HT20 Average Power (dBm)									
Power vs. Channel			Power vs. MCS Index						
Channel	Frequency (MHz)	MCS Index MCS0	MCS1	MCS2	MCS3	MCS4	MCS5	MCS6	MCS7
CH 1	2412	**14.41**	13.79	14.02	14.25	14.34	14.38	14.32	14.34
CH 6	2437	13.78							
CH 11	2462	12.95							

WLAN 2.4GHz 802.11n-HT40 Average Power (dBm)									
Power vs. Channel			Power vs. MCS Index						
Channel	Frequency (MHz)	MCS Index MCS0	MCS1	MCS2	MCS3	MCS4	MCS5	MCS6	MCS7
CH 3	2422	**13.68**	13.59	13.54	13.56	13.64	13.60	13.58	13.54
CH 6	2437	13.39							
CH 9	2452	12.89							

<2.4GHz WLAN Antenna 0+1(0)>

WLAN 2.4GHz 802.11n-HT20 Average Power (dBm)									
Power vs. Channel			Power vs. MCS Index						
Channel	Frequency (MHz)	MCS Index MCS8	MCS9	MCS10	MCS11	MCS12	MCS13	MCS14	MCS15
CH 1	2412	11.15	11.10	11.09	11.04	11.13	**11.22**	11.10	11.15
CH 6	2437	11.00							
CH 11	2462	10.49							

WLAN 2.4GHz 802.11n-HT40 Average Power (dBm)									
Power vs. Channel			Power vs. MCS Index						
Channel	Frequency (MHz)	MCS Index MCS8	MCS9	MCS10	MCS11	MCS12	MCS13	MCS14	MCS15
CH 3	2422	**10.87**	9.91	9.99	10.20	10.49	10.37	10.26	10.26
CH 6	2437	10.78							
CH 9	2452	10.86							

<2.4GHz WLAN Antenna 0+1(1)>

WLAN 2.4GHz 802.11n-HT20 Average Power (dBm)									
Power vs. Channel			Power vs. MCS Index						
Channel	Frequency (MHz)	MCS Index MCS8	MCS9	MCS10	MCS11	MCS12	MCS13	MCS14	MCS15
CH 1	2412	**11.22**	11.06	11.08	11.02	11.21	11.15	11.21	11.12
CH 6	2437	10.94							
CH 11	2462	10.12							

WLAN 2.4GHz 802.11n-HT40 Average Power (dBm)									
Power vs. Channel			Power vs. MCS Index						
Channel	Frequency (MHz)	MCS Index MCS8	MCS9	MCS10	MCS11	MCS12	MCS13	MCS14	MCS15
CH 3	2422	9.51	9.34	9.43	9.22	9.06	9.29	**9.53**	9.50
CH 6	2437	9.50							
CH 9	2452	8.03							

<2.4GHz WLAN Antenna 0+1>

WLAN 2.4GHz 802.11n-HT20 Average Power (dBm)									
Power vs. Channel			Power vs. MCS Index						
Channel	Frequency (MHz)	MCS Index MCS8	MCS9	MCS10	MCS11	MCS12	MCS13	MCS14	MCS15
CH 1	2412	**14.20**	14.09	14.09	14.04	14.18	14.19	14.17	14.15
CH 6	2437	13.98							
CH 11	2462	13.32							

WLAN 2.4GHz 802.11n-HT40 Average Power (dBm)									
Power vs. Channel			Power vs. MCS Index						
Channel	Frequency (MHz)	MCS Index MCS8	MCS9	MCS10	MCS11	MCS12	MCS13	MCS14	MCS15
CH 3	2422	**13.25**	12.64	12.73	12.75	12.85	12.87	12.92	12.91
CH 6	2437	13.20							
CH 9	2452	12.68							

13. Antenna Location

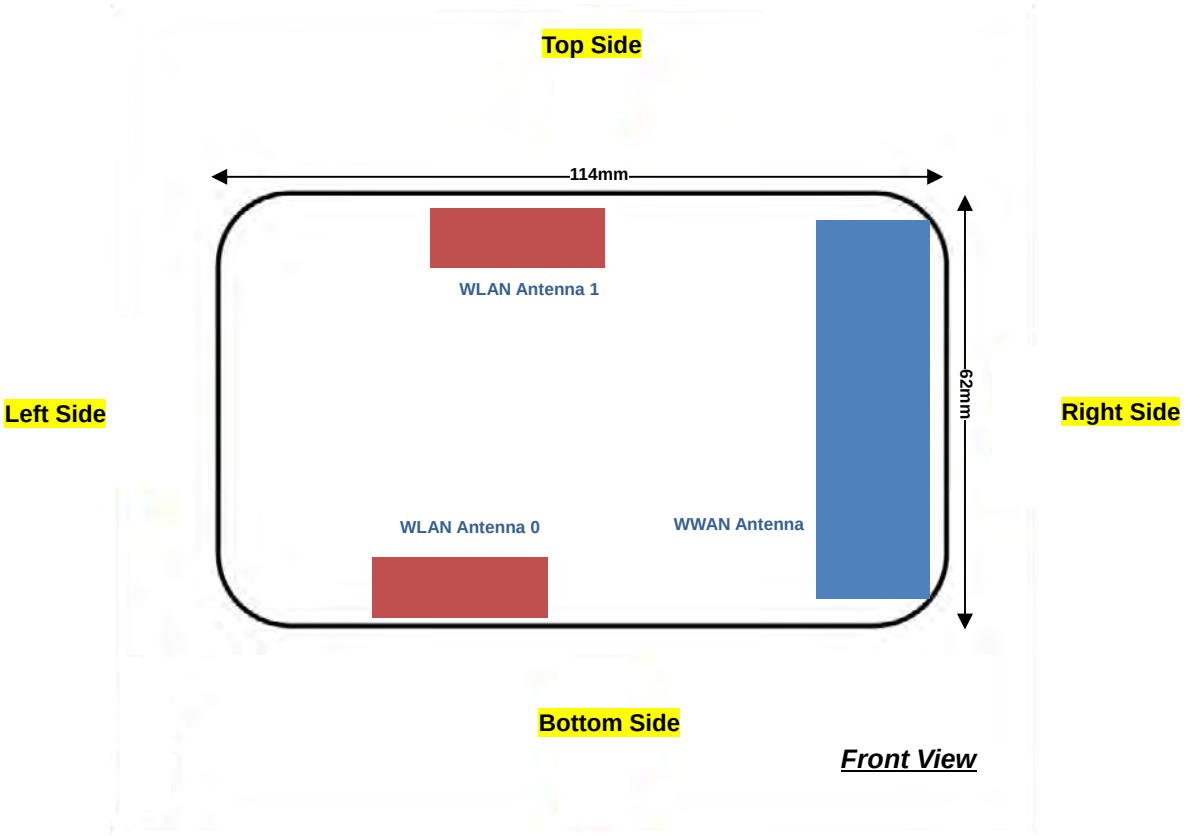

<Transmission configuration>

Wireless Interface	SISO Mode		MIMO Mode
	Antenna 0 <Tx/Rx>	Antenna 1 <Tx/Rx>	Antenna 0+1 <Tx/Rx>
WLAN 2.4GHz 802.11b/g	yes	yes	
WLAN 2.4GHz 802.11n HT20/HT40	yes	yes	yes

Distance of the Antenna to the EUT surface/edge						
Antennas	Back	Front	Top Side	Bottom Side	Right Side	Left Side
WWAN	≤ 25mm	≤ 25mm	≤ 25mm	≤ 25mm	≤ 25mm	103mm
WLAN Antenna 0	≤ 25mm	≤ 25mm	55mm	≤ 25mm	61mm	34mm
WLAN Antenna 1	≤ 25mm	≤ 25mm	≤ 25mm	55mm	53mm	42mm

Positions for SAR tests; Hotspot mode						
Antennas	Back	Front	Top Side	Bottom Side	Right Side	Left Side
WWAN	Yes	Yes	Yes	Yes	Yes	No
WLAN Antenna 0	Yes	Yes	No	Yes	No	No
WLAN Antenna 1	Yes	Yes	Yes	No	No	No

General Note: Referring to KDB 941225 D06 v01r01, when the overall device length and width are ≥ 9cm*5cm, the test distance is 10 mm. SAR must be measured for all sides and surfaces with a transmitting antenna located within 25mm from that surface or edge.

14. SAR Test Results

General Note:

1. Per KDB 447498 D01v05r02, the reported SAR is the measured SAR value adjusted for maximum tune-up tolerance.
   a. Tune-up scaling Factor = tune-up limit power (mW) / EUT RF power (mW), where tune-up limit is the maximum rated power among all production units.
   b. For SAR testing of WLAN signal with non-100% duty cycle, the measured SAR is scaled-up by the duty cycle scaling factor which is equal to "1/(duty cycle)"
   c. For WWAN: Reported SAR(W/kg)= Measured SAR(W/kg)*Tune-up Scaling Factor
   d. For WLAN: Reported SAR(W/kg)= Measured SAR(W/kg)* Duty Cycle scaling factor * Tune-up scaling factor
2. Per KDB 447498 D01v05r02, for each exposure position, testing of other required channels within the operating mode of a frequency band is not required when the *reported* 1-g or 10-g SAR for the mid-band or highest output power channel is:
   - ≤ 0.8 W/kg or 2.0 W/kg, for 1-g or 10-g respectively, when the transmission band is ≤ 100 MHz
   - ≤ 0.6 W/kg or 1.5 W/kg, for 1-g or 10-g respectively, when the transmission band is between 100 MHz and 200 MHz
   - ≤ 0.4 W/kg or 1.0 W/kg, for 1-g or 10-g respectively, when the transmission band is ≥ 200 MHz
3. Per KDB 941225 D02v02r02, RMC 12.2kbps setting is used to evaluate SAR. If HSDPA/HSUPA output power is < 0.25dB higher than RMC, or reported SAR with RMC 12.2kbps setting is ≤ 1.2W/kg, HSDPA/HSUPA SAR evaluation can be excluded.
4. This device 2.4GHz WLAN supports Hotspot operation.

14.1 Body SAR

Distance of the Antenna to the EUT surface/edge						
Antennas	Back	Front	Top Side	Bottom Side	Right Side	Left Side
WWAN	≤ 25mm	≤ 25mm	≤ 25mm	≤ 25mm	≤ 25mm	103mm
WLAN Antenna 0	≤ 25mm	≤ 25mm	55mm	≤ 25mm	61mm	34mm
WLAN Antenna 1	≤ 25mm	≤ 25mm	≤ 25mm	55mm	53mm	42mm

Positions for SAR tests; Hotspot mode						
Antennas	Back	Front	Top Side	Bottom Side	Right Side	Left Side
WWAN	Yes	Yes	Yes	Yes	Yes	No
WLAN Antenna 0	Yes	Yes	No	Yes	No	No
WLAN Antenna 1	Yes	Yes	Yes	No	No	No

General Note: Referring to KDB 941225 D06 v01r01, when the overall device length and width are ≥ 9cm*5cm, the test distance is 10 mm. SAR must be measured for all sides and surfaces with a transmitting antenna located within 25mm from that surface or edge

<WCDMA SAR>

Plot No.	Band	Mode	Test Position	Gap (cm)	Ch.	Freq. (MHz)	Average Power (dBm)	Tune-Up Limit (dBm)	Tune-up Scaling Factor	Power Drift (dB)	Measured 1g SAR (W/kg)	Reported 1g SAR (W/kg)
	WCDMA Band V	RMC 12.2K	Front	1	4132	826.4	22.88	23.5	1.153	0.11	1.15	1.326
01	**WCDMA Band V**	**RMC 12.2K**	**Back**	**1**	**4132**	**826.4**	**22.88**	**23.5**	**1.153**	**-0.01**	**1.20**	**1.384**
	WCDMA Band V	RMC 12.2K	Right side	1	4132	826.4	22.88	23.5	1.153	0.01	0.04	0.046
	WCDMA Band V	RMC 12.2K	Top side	1	4132	826.4	22.88	23.5	1.153	0.05	0.783	0.903
	WCDMA Band V	RMC 12.2K	Bottom side	1	4132	826.4	22.88	23.5	1.153	0.01	0.585	0.675
	WCDMA Band V	RMC 12.2K	Front	1	4182	836.4	22.82	23.5	1.169	0.03	1.04	1.216
	WCDMA Band V	RMC 12.2K	Front	1	4233	846.6	22.68	23.5	1.208	0.01	1.05	1.268
	WCDMA Band V	RMC 12.2K	Back	1	4182	836.4	22.82	23.5	1.169	-0.03	1.11	1.298
	WCDMA Band V	RMC 12.2K	Back	1	4233	846.6	22.68	23.5	1.208	-0.01	1.14	1.377
	WCDMA Band V	RMC 12.2K	Top side	1	4182	836.4	22.82	23.5	1.169	-0.08	0.764	0.893
	WCDMA Band V	RMC 12.2K	Top side	1	4233	846.6	22.68	23.5	1.208	0.02	0.758	0.916

<DTS WLAN SAR>

Plot No.	Band	Mode	Test Position	Gap (cm)	Ant.	Ch.	Freq. (MHz)	Average Power (dBm)	Tune-Up Limit (dBm)	Tune-up Scaling Factor	Duty Cycle %	Duty Cycle Scaling Factor	Power Drift (dB)	Measured 1g SAR (W/kg)	Reported 1g SAR (W/kg)
	WLAN2.4GHz	802.11b_1M	Front	1	0	1	2412	15.19	15.5	1.074	100	1.000	-0.07	0.141	0.151
	WLAN2.4GHz	802.11b_1M	Back	1	0	1	2412	15.19	15.5	1.074	100	1.000	0.05	0.13	0.140
02	**WLAN2.4GHz**	**802.11b_1M**	**Bottom Side**	**1**	**0**	**1**	**2412**	**15.19**	**15.5**	**1.074**	**100**	**1.000**	**0.16**	**0.163**	**0.175**
	WLAN2.4GHz	802.11b_1M	Front	1	1	1	2412	15.05	15.5	1.109	100	1.000	0.03	0.104	0.115
	WLAN2.4GHz	802.11b_1M	Back	1	1	1	2412	15.05	15.5	1.109	100	1.000	0.02	0.115	0.128
03	**WLAN2.4GHz**	**802.11b_1M**	**Top Side**	**1**	**1**	**1**	**2412**	**15.05**	**15.5**	**1.109**	**100**	**1.000**	**0.09**	**0.184**	**0.204**
	WLAN2.4GHz	802.11n-HT20_MCS8	Front	1	0+1	1	2412	14.20	14.5	1.072	94.79	1.055	0.05	0.044	0.050
	WLAN2.4GHz	802.11n-HT20_MCS8	Back	1	0+1	1	2412	14.20	14.5	1.072	94.79	1.055	0.03	0.045	0.051
	WLAN2.4GHz	802.11n-HT20_MCS8	Top Side	1	0+1	1	2412	14.20	14.5	1.072	94.79	1.055	0.03	0.052	0.059
04	**WLAN2.4GHz**	**802.11n-HT20_MCS8**	**Bottom Side**	**1**	**0+1**	**1**	**2412**	**14.20**	**14.5**	**1.072**	**94.79**	**1.055**	**0.09**	**0.058**	**0.066**

14.2 Repeated SAR Measurement

No.	Band	Mode	Test Position	Gap (cm)	Ch.	Freq. (MHz)	Average Power (dBm)	Tune-Up Limit (dBm)	Tune-up Scaling Factor	Power Drift (dB)	Measured 1g SAR (W/kg)	Ratio	Reported 1g SAR (W/kg)
1st	WCDMA Band V	RMC 12.2K	Back	1	4132	826.4	22.88	23.5	1.153	-0.01	1.20	1	1.384
2nd	WCDMA Band V	RMC 12.2K	Back	1	4132	826.4	22.88	23.5	1.153	0.01	1.13	1.062	1.303

General Note:

1. Per KDB 865664 D01v01r03, for each frequency band, repeated SAR measurement is required only when the measured SAR is ≥0.8W/kg
2. Per KDB 865664 D01v01r03, if the ratio among the repeated measurement is ≤ 1.2 and the measured SAR <1.45W/kg, only one repeated measurement is required.
3. The ratio is the difference in percentage between original and repeated *measured SAR*.
4. All measurement SAR result is scaled-up to account for tune-up tolerance and is compliant.

15. Simultaneous Transmission Analysis

NO.	Simultaneous Transmission Configurations	LTE uFi	Note
		Body	
1.	WCDMA(Data) + WLAN2.4GHz SISO(data)	Yes	2.4GHz Hotspot
2.	WCDMA(Data) + WLAN2.4GHz MIMO(data)	Yes	2.4GHz Hotspot

General Note:

1. This device has no voice function.
2. This device 2.4GHz WLAN supports Hotspot operation.
3. The Reported SAR summation is calculated based on the same configuration and test position.
4. Per KDB 447498 D01v05r02, simultaneous transmission SAR is compliant if,
   i) Reported SAR summation < 1.6W/kg.
   ii) SPLSR = (SAR1 + SAR2)^1.5 / (min. separation distance, mm), and the peak separation distance is determined from the square root of [(x1-x2)2 + (y1-y2)2 + (z1-z2)2], where (x1, y1, z1) and (x2, y2, z2) are the coordinates of the extrapolated peak SAR locations in the zoom scan.
   iii) If SPLSR ≤ 0.04, simultaneously transmission SAR measurement is not necessary.
   iv) Simultaneously transmission SAR measurement, and the reported multi-band SAR < 1.6W/kg.

15.1 Body Exposure Conditions

< WWAN + WLAN2.4GHz Antenna 0>

WWAN Band		Exposure Position	WWAN PCB Max. WWAN SAR (W/kg)	WLAN DTS Max. WLAN SAR (W/kg)	Summed SAR (W/kg)	SPLSR	Case No
WCMDA	Band V	Front	1.326	0.151	1.48		
		Back	1.384	0.140	**1.52**		
		Right side	0.046		0.05		
		Top side	0.916		0.92		
		Bottom side	0.675	0.175	0.85		

< WWAN + WLAN2.4GHz Antenna 1>

WWAN Band		Exposure Position	WWAN PCB Max. WWAN SAR (W/kg)	WLAN DTS Max. WLAN SAR (W/kg)	Summed SAR (W/kg)	SPLSR	Case No
WCMDA	Band V	Front	1.326	0.115	1.44		
		Back	1.384	0.128	1.51		
		Right side	0.046		0.05		
		Top side	0.916	0.204	1.12		
		Bottom side	0.675		0.68		

< WWAN + WLAN2.4GHz Antenna 0+1>

WWAN Band		Exposure Position	WWAN PCB Max. WWAN SAR (W/kg)	WLAN DTS Max. WLAN SAR (W/kg)	Summed SAR (W/kg)	SPLSR	Case No
WCMDA	Band V	Front	1.326	0.050	1.38		
		Back	1.384	0.051	1.44		
		Right side	0.046		0.05		
		Top side	0.916	0.059	0.98		
		Bottom side	0.675	0.066	0.74		

Test Engineer： Kat Yin

16. Uncertainty Assessment

The component of uncertainly may generally be categorized according to the methods used to evaluate them. The evaluation of uncertainly by the statistical analysis of a series of observations is termed a Type An evaluation of uncertainty. The evaluation of uncertainty by means other than the statistical analysis of a series of observation is termed a Type B evaluation of uncertainty. Each component of uncertainty, however evaluated, is represented by an estimated standard deviation, termed standard uncertainty, which is determined by the positive square root of the estimated variance.

A Type A evaluation of standard uncertainty may be based on any valid statistical method for treating data. This includes calculating the standard deviation of the mean of a series of independent observations; using the method of least squares to fit a curve to the data in order to estimate the parameter of the curve and their standard deviations; or carrying out an analysis of variance in order to identify and quantify random effects in certain kinds of measurement.

A type B evaluation of standard uncertainty is typically based on scientific judgment using all of the relevant information available. These may include previous measurement data, experience, and knowledge of the behavior and properties of relevant materials and instruments, manufacture's specification, data provided in calibration reports and uncertainties assigned to reference data taken from handbooks. Broadly speaking, the uncertainty is either obtained from an outdoor source or obtained from an assumed distribution, such as the normal distribution, rectangular or triangular distributions indicated in table below.

Uncertainty Distributions	Normal	Rectangular	Triangular	U-Shape
Multi-plying Factor[(a)]	1/k[(b)]	1/√3	1/√6	1/√2

(a) standard uncertainty is determined as the product of the multiplying factor and the estimated range of variations in the measured quantity

(b) κ is the coverage factor

Table 14.1. Standard Uncertainty for Assumed Distribution

The combined standard uncertainty of the measurement result represents the estimated standard deviation of the result. It is obtained by combining the individual standard uncertainties of both Type A and Type B evaluation using the usual "root-sum-squares" (RSS) methods of combining standard deviations by taking the positive square root of the estimated variances.

Expanded uncertainty is a measure of uncertainty that defines an interval about the measurement result within which the measured value is confidently believed to lie. It is obtained by multiplying the combined standard uncertainty by a coverage factor. Typically, the coverage factor ranges from 2 to 3. Using a coverage factor allows the true value of a measured quantity to be specified with a defined probability within the specified uncertainty range. For purpose of this document, a coverage factor two is used, which corresponds to confidence interval of about 95 %. The DASY uncertainty Budget is shown in the following tables.

Error Description	Uncertainty Value (±%)	Probability Distribution	Divisor	Ci (1g)	Ci (10g)	Standard Uncertainty (1g)	Standard Uncertainty (10g)
Measurement System							
Probe Calibration	6.0	Normal	1	1	1	± 6.0 %	± 6.0 %
Axial Isotropy	4.7	Rectangular	√3	0.7	0.7	± 1.9 %	± 1.9 %
Hemispherical Isotropy	9.6	Rectangular	√3	0.7	0.7	± 3.9 %	± 3.9 %
Boundary Effects	1.0	Rectangular	√3	1	1	± 0.6 %	± 0.6 %
Linearity	4.7	Rectangular	√3	1	1	± 2.7 %	± 2.7 %
System Detection Limits	1.0	Rectangular	√3	1	1	± 0.6 %	± 0.6 %
Readout Electronics	0.3	Normal	1	1	1	± 0.3 %	± 0.3 %
Response Time	0.8	Rectangular	√3	1	1	± 0.5 %	± 0.5 %
Integration Time	2.6	Rectangular	√3	1	1	± 1.5 %	± 1.5 %
RF Ambient Noise	3.0	Rectangular	√3	1	1	± 1.7 %	± 1.7 %
RF Ambient Reflections	3.0	Rectangular	√3	1	1	± 1.7 %	± 1.7 %
Probe Positioner	0.4	Rectangular	√3	1	1	± 0.2 %	± 0.2 %
Probe Positioning	2.9	Rectangular	√3	1	1	± 1.7 %	± 1.7 %
Max. SAR Eval.	1.0	Rectangular	√3	1	1	± 0.6 %	± 0.6 %
Test Sample Related							
Device Positioning	2.9	Normal	1	1	1	± 2.9 %	± 2.9 %
Device Holder	3.6	Normal	1	1	1	± 3.6 %	± 3.6 %
Power Drift	5.0	Rectangular	√3	1	1	± 2.9 %	± 2.9 %
Phantom and Setup							
Phantom Uncertainty	4.0	Rectangular	√3	1	1	± 2.3 %	± 2.3 %
Liquid Conductivity (Target)	5.0	Rectangular	√3	0.64	0.43	± 1.8 %	± 1.2 %
Liquid Conductivity (Meas.)	2.5	Normal	1	0.64	0.43	± 1.6 %	± 1.1 %
Liquid Permittivity (Target)	5.0	Rectangular	√3	0.6	0.49	± 1.7 %	± 1.4 %
Liquid Permittivity (Meas.)	2.5	Normal	1	0.6	0.49	± 1.5 %	± 1.2 %
Combined Standard Uncertainty						± 11.0 %	± 10.8 %
Coverage Factor for 95 %						K=2	
Expanded Uncertainty						**± 22.0 %**	**± 21.5 %**

Table 14.2. Uncertainty Budget for frequency range 300 MHz to 3 GHz

17. References

[1] FCC 47 CFR Part 2 “Frequency Allocations and Radio Treaty Matters; General Rules and Regulations”

[2] ANSI/IEEE Std. C95.1-1992, “IEEE Standard for Safety Levels with Respect to Human Exposure to Radio Frequency Electromagnetic Fields, 3 kHz to 300 GHz”, September 1992

[3] IEEE Std. 1528-2003, “Recommended Practice for Determining the Peak Spatial-Average Specific Absorption Rate (SAR) in the Human Head from Wireless Communications Devices: Measurement Techniques”, December 2003

[4] SPEAG DASY System Handbook

[5] FCC KDB 248227 D01 v01r02, “SAR Measurement Procedures for 802.11 a/b/g Transmitters”, May 2007

[6] FCC KDB 447498 D01 v05r02, “Mobile and Portable Device RF Exposure Procedures and Equipment Authorization Policies”, Feb 2014

[7] FCC KDB 941225 D01 v02, “SAR Measurement Procedures for 3G Devices – CDMA 2000 / Ev-Do / WCDMA / HSDPA / HSPA”, October 2007

[8] FCC KDB 941225 D02 v02r02, “SAR Guidance for HSPA, HSPA+, DC-HSDPA and 1x-Advanced”, May 2013.

[9] FCC KDB 941225 D06 v01r01, "SAR Evaluation Procedures for Portable Devices with Wireless Router Capabilities", May 2013.

[10] FCC KDB 865664 D01 v01r03, "SAR Measurement Requirements for 100 MHz to 6 GHz", Feb 2014.

[11] FCC KDB 865664 D02 v01r01, “RF Exposure Compliance Reporting and Documentation Considerations” May 2013.

Appendix A. Plots of System Performance Check

The plots are shown as follows.

Test Laboratory: Sporton International Inc. SAR/HAC Testing Lab Date: 2014/6/7

System Check_Body_835MHz_140607

DUT: D835V2 - SN:4d151

Communication System: CW; Frequency: 835 MHz;Duty Cycle: 1:1
Medium: MSL_835_140607 Medium parameters used: f = 835 MHz; σ = 0.974 S/m; ε_r = 54.111; ρ = 1000 kg/m^3
Ambient Temperature：23.5 ℃; Liquid Temperature ：22.5 ℃

DASY5 Configuration:
- Probe: EX3DV4 - SN3898; ConvF(9.63, 9.63, 9.63); Calibrated: 2014/3/10;
- Sensor-Surface: 2mm (Mechanical Surface Detection)
- Electronics: DAE4 Sn1353; Calibrated: 2014/1/30
- Phantom: SAM1; Type: QD000P40CD; Serial: TP:1753
- Measurement SW: DASY52, Version 52.8 (5); SEMCAD X Version 14.6.8 (7028)

Pin=250mW/Area Scan (61x61x1): Interpolated grid: dx=15mm, dy=15mm
Maximum value of SAR (interpolated) = 2.40 W/kg

Pin=250mW/Zoom Scan (5x5x7)/Cube 0: Measurement grid: dx=8mm, dy=8mm, dz=5mm
Reference Value = 49.515 V/m; Power Drift = 0.03 dB
Peak SAR (extrapolated) = 3.26 W/kg
SAR(1 g) = 2.23 W/kg; SAR(10 g) = 1.47 W/kg
Maximum value of SAR (measured) = 2.39 W/kg

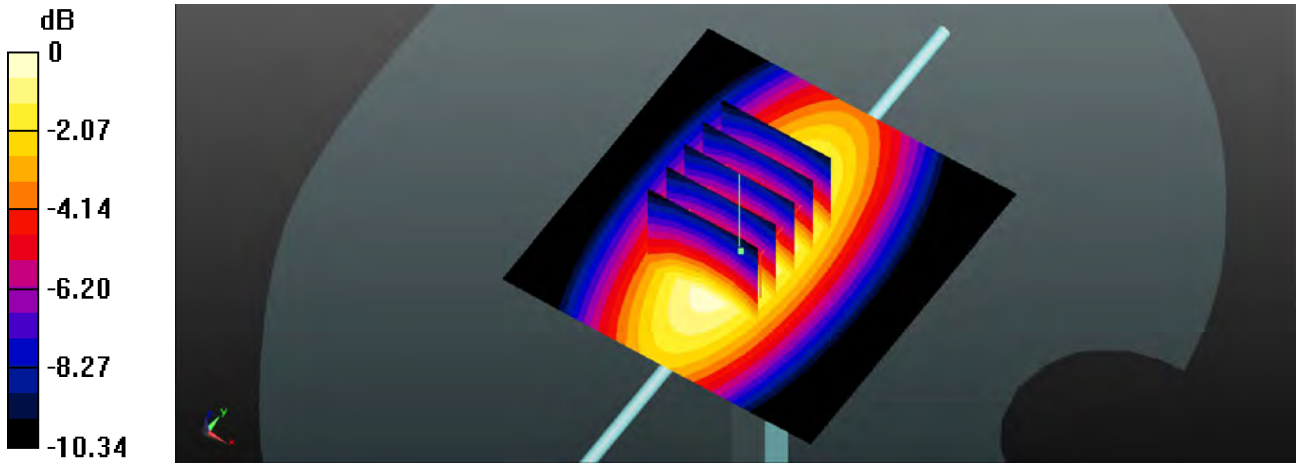

0 dB = 2.39 W/kg

Test Laboratory: Sporton International Inc. SAR/HAC Testing Lab Date: 2014.08.21

System Check_Body_2450MHz_140821

DUT: D2450V2 - SN:908

Communication System: CW; Frequency: 2450 MHz;Duty Cycle: 1:1
Medium: MSL_2450_140821 Medium parameters used: f = 2450 MHz; σ = 1.943 mho/m; ε_r = 50.971; ρ = 1000 kg/m^3
Ambient Temperature：23.2 ℃； Liquid Temperature：22.6 ℃

DASY5 Configuration:
- Probe: EX3DV4 - SN3857; ConvF(7.14, 7.14, 7.14); Calibrated: 2014.05.23
- Sensor-Surface: 2mm (Mechanical Surface Detection)
- Electronics: DAE4 Sn1210; Calibrated: 2014.05.19
- Phantom: SAM1; Type: SAM; Serial: TP-1479
- Measurement SW: DASY52, Version 52.8 (8); SEMCAD X Version 14.4.5 (3634)

Pin=250mW/Area Scan (71x71x1): Measurement grid: dx=12mm, dy=12mm
Maximum value of SAR (interpolated) = 19.143 mW/g

Pin=250mW/Zoom Scan (7x7x7)/Cube 0: Measurement grid: dx=5mm, dy=5mm, dz=5mm
Reference Value = 85.344 V/m; Power Drift = -0.04 dB
Peak SAR (extrapolated) = 25.032 W/kg
SAR(1 g) = 12.3 mW/g; SAR(10 g) = 5.71 mW/g
Maximum value of SAR (measured) = 18.702 mW/g

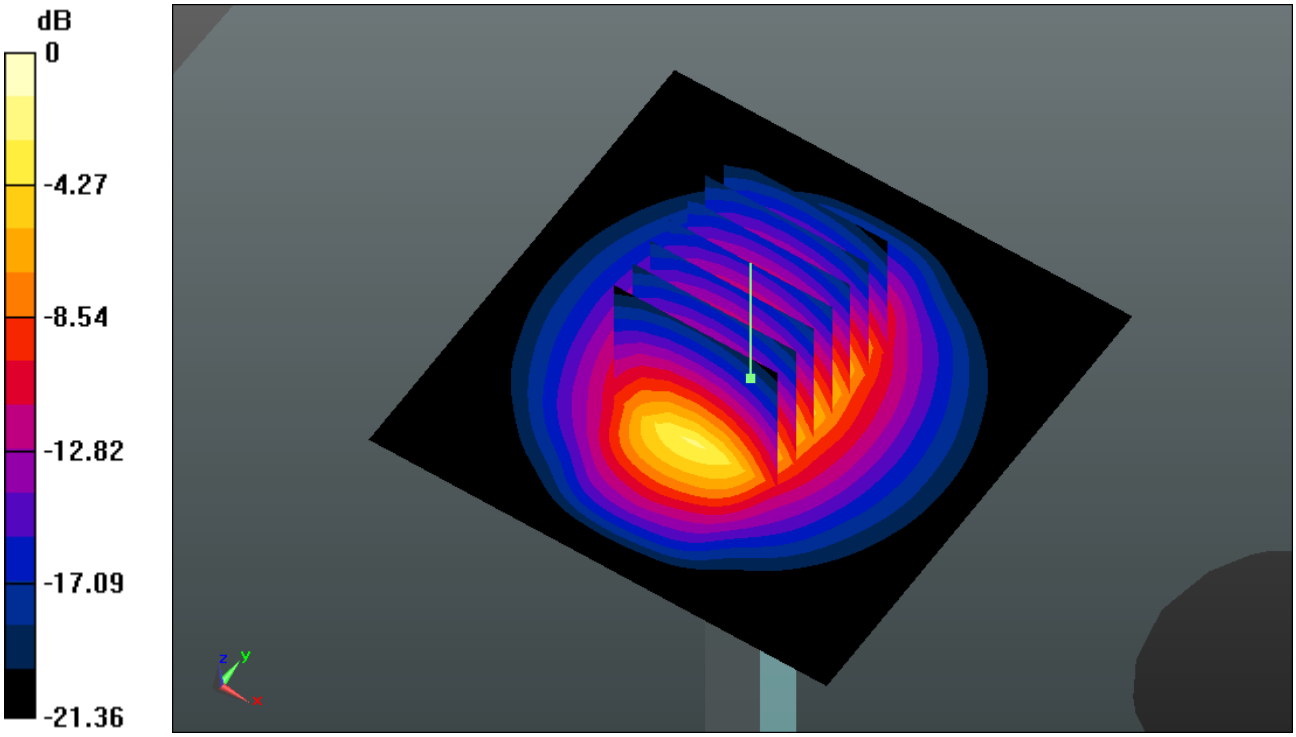

0 dB = 18.700mW/g

Appendix B. Plots of High SAR Measurement

The plots are shown as follows.

Test Laboratory: Sporton International Inc. SAR/HAC Testing Lab Date: 2014/6/7

01 WCDMA Band V_RMC 12.2K_Back_1.0cm_Ch4132

Communication System: WCDMA ; Frequency: 826.4 MHz;Duty Cycle: 1:1
Medium: MSL_835_140607 Medium parameters used: f = 826.4 MHz; σ = 0.966 S/m; ε_r = 54.179; ρ = 1000 kg/m^3
Ambient Temperature：23.5 ℃; Liquid Temperature ：22.5 ℃

DASY5 Configuration:
- Probe: EX3DV4 - SN3898; ConvF(9.63, 9.63, 9.63); Calibrated: 2014/3/10;
- Sensor-Surface: 2mm (Mechanical Surface Detection)
- Electronics: DAE4 Sn1353; Calibrated: 2014/1/30
- Phantom: SAM1; Type: QD000P40CD; Serial: TP:1753
- Measurement SW: DASY52, Version 52.8 (5); SEMCAD X Version 14.6.8 (7028)

Ch4132/Area Scan (51x91x1): Interpolated grid: dx=15mm, dy=15mm
Maximum value of SAR (interpolated) = 1.42 W/kg

Ch4132/Zoom Scan (5x5x7)/Cube 0: Measurement grid: dx=8mm, dy=8mm, dz=5mm
Reference Value = 34.547 V/m; Power Drift = -0.01 dB
Peak SAR (extrapolated) = 1.56 W/kg
SAR(1 g) = 1.2 W/kg; SAR(10 g) = 0.892 W/kg
Maximum value of SAR (measured) = 1.40 W/kg

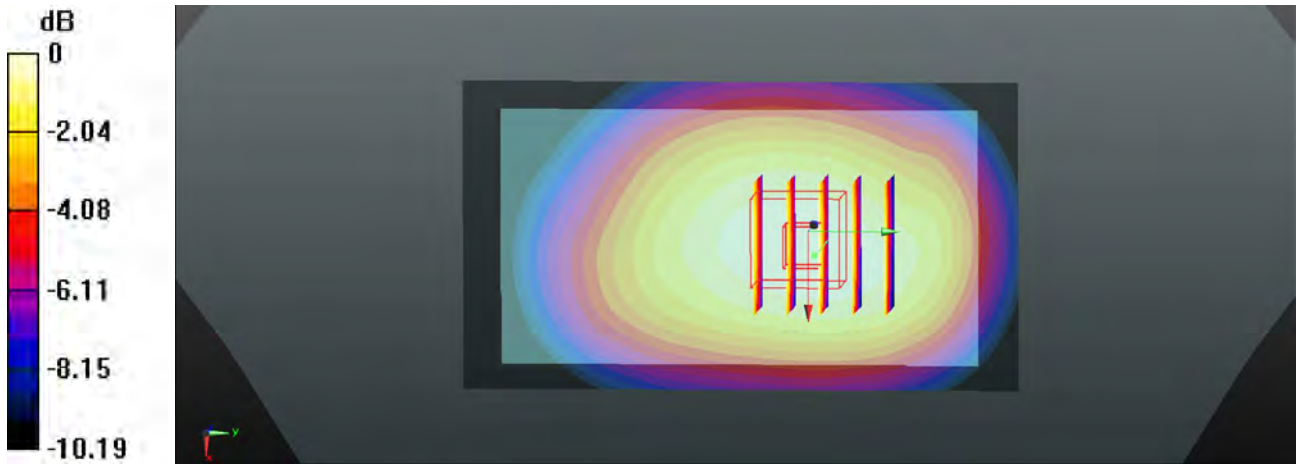

0 dB = 1.40 W/kg

Test Laboratory: Sporton International Inc. SAR/HAC Testing Lab Date: 2014.08.21

02_WLAN2.4GHz_802.11b_1M_Bottom Side 1cm_Ch1_Ant.0

Communication System: WIFI (0); Frequency: 2412 MHz;Duty Cycle: 1:1
Medium: MSL_2450_140821 Medium parameters used: f = 2412 MHz; σ = 1.888 mho/m; ε_r = 51.143; ρ = 1000 kg/m^3
Ambient Temperature：23.2 ℃； Liquid Temperature：22.6 ℃

DASY5 Configuration:
- Probe: EX3DV4 - SN3857; ConvF(7.14, 7.14, 7.14); Calibrated: 2014.05.23
- Sensor-Surface: 2mm (Mechanical Surface Detection)
- Electronics: DAE4 Sn1210; Calibrated: 2014.05.19
- Phantom: SAM1; Type: SAM; Serial: TP-1479
- Measurement SW: DASY52, Version 52.8 (8); SEMCAD X Version 14.4.5 (3634)

Ch1/Area Scan (41x121x1): Measurement grid: dx=12mm, dy=12mm
Maximum value of SAR (interpolated) = 0.224 mW/g

Ch1/Zoom Scan (7x7x7)/Cube 0: Measurement grid: dx=5mm, dy=5mm, dz=5mm
Reference Value = 7.716 V/m; Power Drift = 0.16 dB
Peak SAR (extrapolated) = 0.296 W/kg
SAR(1 g) = 0.163 mW/g; SAR(10 g) = 0.089 mW/g
Maximum value of SAR (measured) = 0.229 mW/g

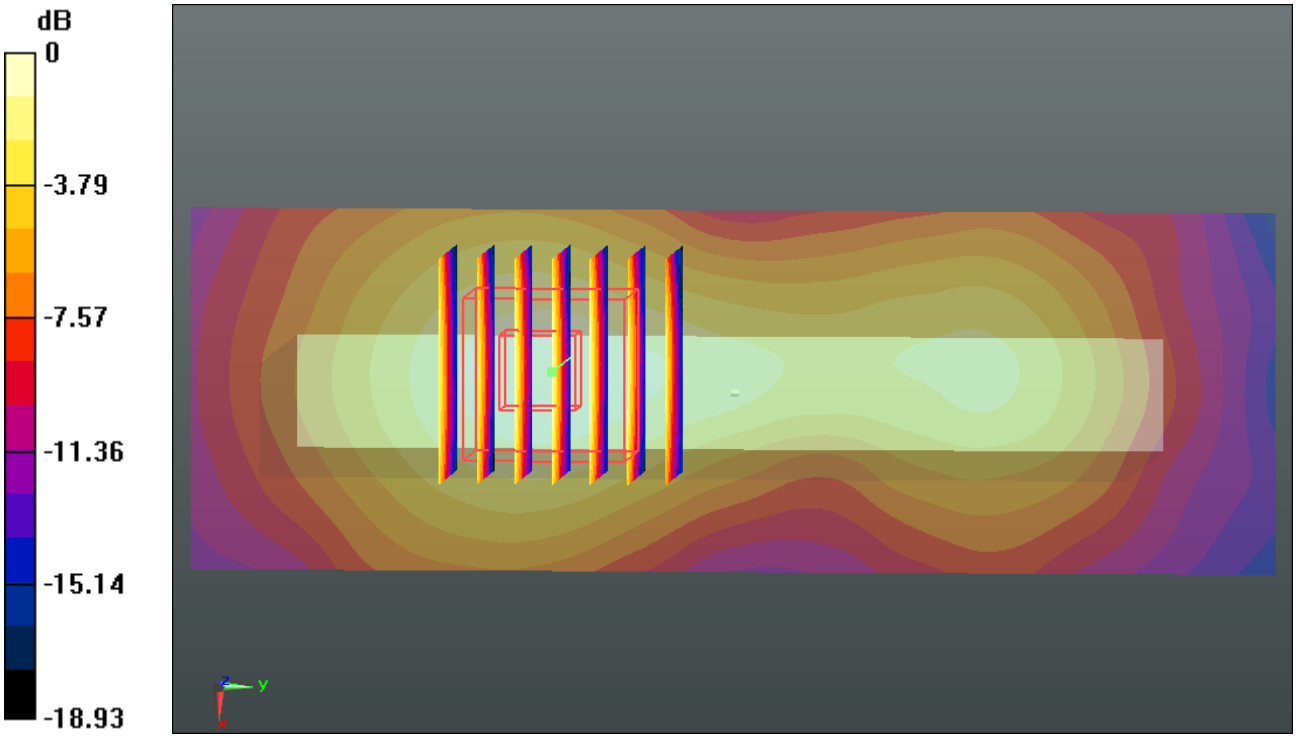

0 dB = 0.230mW/g

Test Laboratory: Sporton International Inc. SAR/HAC Testing Lab Date: 2014.08.21

03_WLAN2.4GHz_802.11b_1M_Top Side 1cm_Ch1_Ant.1

Communication System: WIFI (0); Frequency: 2412 MHz;Duty Cycle: 1:1
Medium: MSL_2450_140821 Medium parameters used: f = 2412 MHz; σ = 1.888 mho/m; ε_r = 51.143; ρ = 1000 kg/m^3
Ambient Temperature：23.2 ℃； Liquid Temperature：22.6 ℃

DASY5 Configuration:
- Probe: EX3DV4 - SN3857; ConvF(7.14, 7.14, 7.14); Calibrated: 2014.05.23
- Sensor-Surface: 2mm (Mechanical Surface Detection)
- Electronics: DAE4 Sn1210; Calibrated: 2014.05.19
- Phantom: SAM1; Type: SAM; Serial: TP-1479
- Measurement SW: DASY52, Version 52.8 (8); SEMCAD X Version 14.4.5 (3634)

Ch1/Area Scan (41x121x1): Measurement grid: dx=12mm, dy=12mm
Maximum value of SAR (interpolated) = 0.267 mW/g

Ch1/Zoom Scan (7x7x7)/Cube 0: Measurement grid: dx=5mm, dy=5mm, dz=5mm
Reference Value = 8.624 V/m; Power Drift = 0.09 dB
Peak SAR (extrapolated) = 0.356 W/kg
SAR(1 g) = 0.184 mW/g; SAR(10 g) = 0.091 mW/g
Maximum value of SAR (measured) = 0.264 mW/g

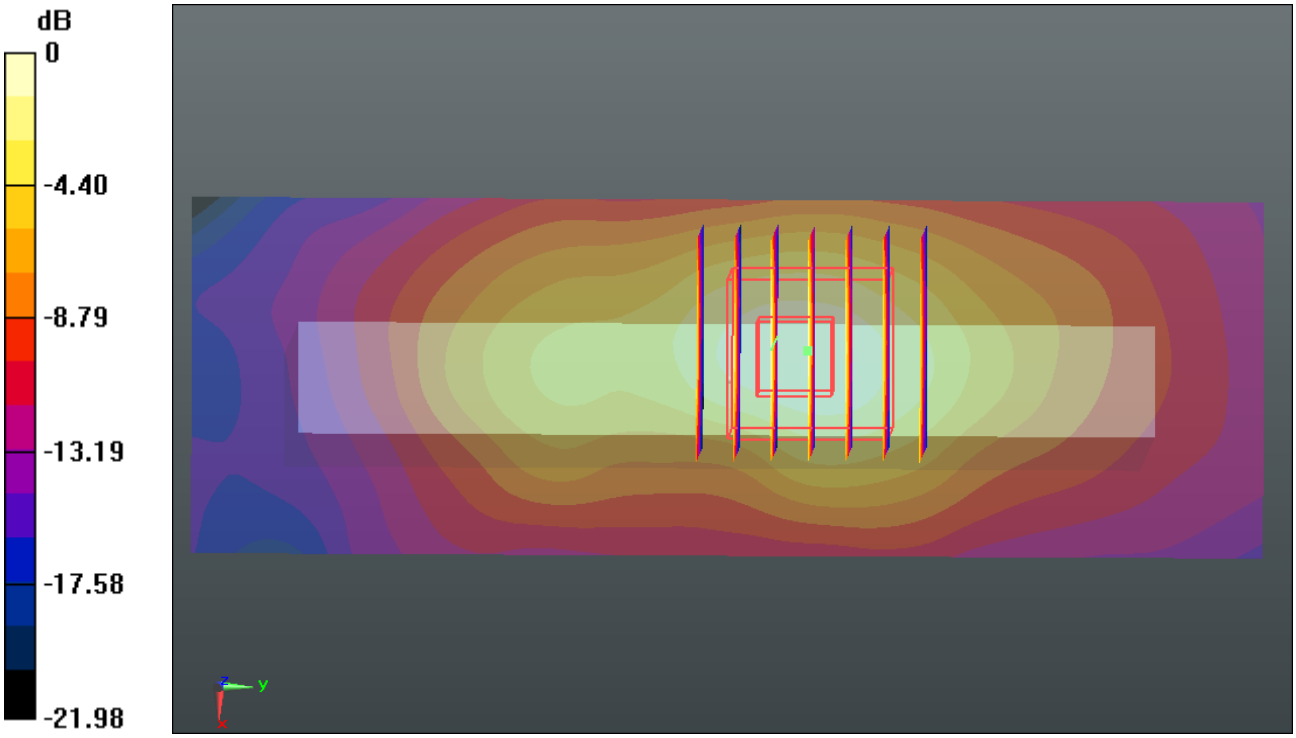

0 dB = 0.260mW/g

04_WLAN2.4GHz_802.11n-HT20_MCS8_Bottom Side 1cm_Ch1_Ant.0+1

Communication System: WIFI (0); Frequency: 2412 MHz;Duty Cycle: 1:1.055
Medium: MSL_2450_140821 Medium parameters used: f = 2412 MHz; σ = 1.888 mho/m; ε_r = 51.143; ρ = 1000 kg/m^3
Ambient Temperature：23.2 ℃； Liquid Temperature：22.6 ℃

DASY5 Configuration:
- Probe: EX3DV4 - SN3857; ConvF(7.14, 7.14, 7.14); Calibrated: 2014.05.23
- Sensor-Surface: 2mm (Mechanical Surface Detection)
- Electronics: DAE4 Sn1210; Calibrated: 2014.05.19
- Phantom: SAM1; Type: SAM; Serial: TP-1479
- Measurement SW: DASY52, Version 52.8 (8); SEMCAD X Version 14.4.5 (3634)

Ch1/Area Scan (41x121x1): Measurement grid: dx=12mm, dy=12mm
Maximum value of SAR (interpolated) = 0.083 mW/g

Ch1/Zoom Scan (7x7x7)/Cube 0: Measurement grid: dx=5mm, dy=5mm, dz=5mm
Reference Value = 4.706 V/m; Power Drift = 0.09 dB
Peak SAR (extrapolated) = 0.109 W/kg
SAR(1 g) = 0.058 mW/g; SAR(10 g) = 0.031 mW/g
Maximum value of SAR (measured) = 0.081 mW/g

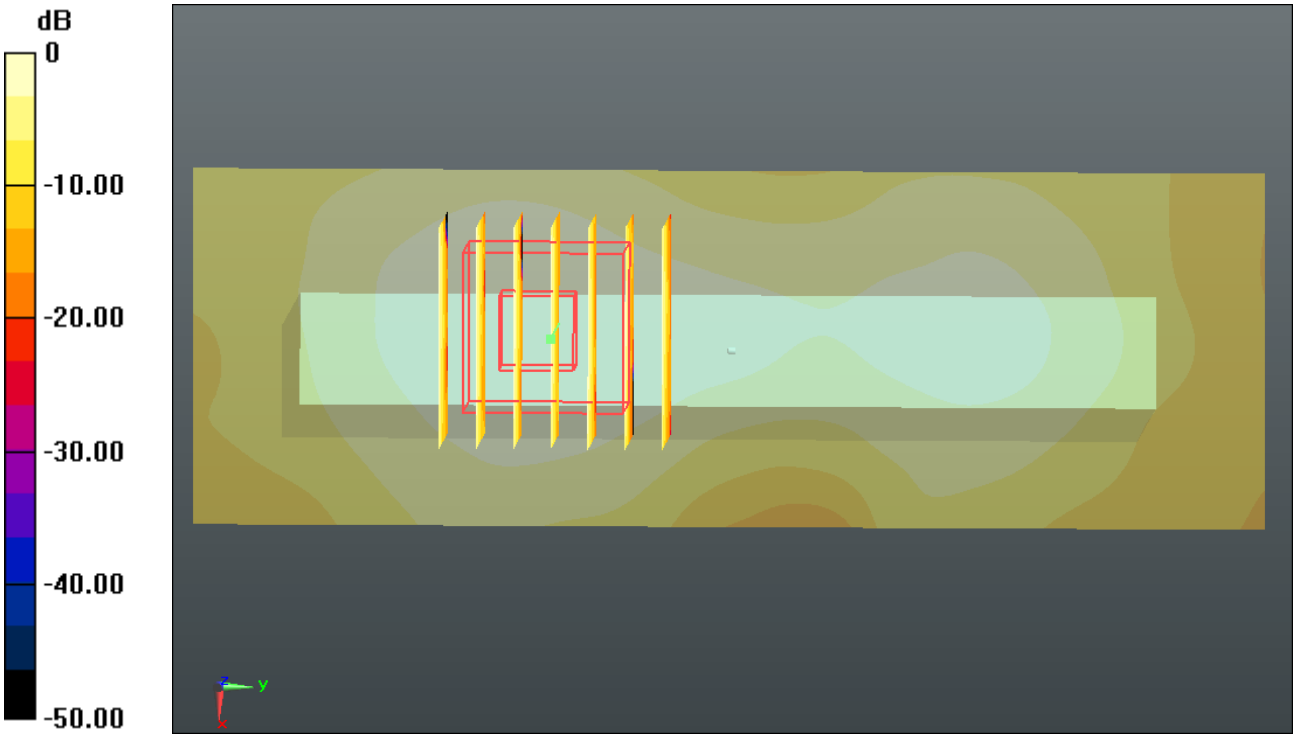

0 dB = 0.080mW/g