中国认可
国际互认
检测
TESTING
CNAS L2264

# RF TEST REPORT

| | |
|---|---|
| **Applicant** | ZTE Corporation |
| **FCC ID** | SRQ-VFD710 |
| **Product** | LTE/WCDMA/GSM(GPRS) Multi-Mode Digital Mobile Phone |
| **Brand** | ZTE |
| **Model** | VFD 710 / Vodafone VFD 710 |
| **Report No.** | RXC1702-0029RF06R1 |
| **Issue Date** | May 4, 2017 |

TA Technology (Shanghai) Co., Ltd. tested the above equipment in accordance with the requirements in **FCC CFR47 Part 15C (2016)**. The test results show that the equipment tested is capable of demonstrating compliance with the requirements as documented in this report.

*Performed by: Xianqing Li* *Reviewed by: Kai Xu*


## TA Technology (Shanghai) Co., Ltd.

*No.145, Jintang Rd, Tangzhen Industry Park, Pudong Shanghai, China*

*TEL: +86-021-50791141/2/3*

*FAX: +86-021-50791141/2/3-8000*

# TABLE OF CONTENT

1. Test Laboratory ..... 4
1.1. Notes of the test report ..... 4
1.2. Test facility ..... 4
1.3. Testing Location ..... 5
2. General Description of Equipment under Test ..... 6
3. Applied Standards ..... 8
4. Test Configuration ..... 9
5. Test Case Results ..... 10
5.1. 20dB Bandwidth ..... 10
5.2. Frequency Stability ..... 12
5.3. Radiates Emission ..... 15
5.4. Conducted Emission ..... 22
6. Main Test Instruments ..... 25
ANNEX A: EUT Appearance and Test Setup ..... 26
A.1 EUT Appearance ..... 26
A.2 Test Setup ..... 28


*This report shall not be reproduced except in full, without the written approval of TA Technology (Shanghai) Co., Ltd.*

# Summary of measurement results

| Number | Summary of measurements of results | Clause in FCC rules | Verdict |
|---|---|---|---|
| 1 | 20 dB bandwidth | 2.1049 | PASS |
| 2 | Frequency Stability Tolerance | 15.225(e) | PASS |
| 3 | Radiated Emissions | 15.225 (a) (b) (c) (d) and 15.209 | PASS |
| 4 | Conducted Emissions | 15.207 | PASS |
| Date of Testing: February 13, 2017~ March 17, 2017 | | | |


*This report shall not be reproduced except in full, without the written approval of TA Technology (Shanghai) Co., Ltd.*

# 1. Test Laboratory

## 1.1. Notes of the test report

This report shall not be reproduced in full or partial, without the written approval of **TA technology (shanghai) co., Ltd.** The results documented in this report apply only to the tested sample, under the conditions and modes of operation as described herein .Measurement Uncertainties were not taken into account and are published for informational purposes only. This report is written to support regulatory compliance of the applicable standards stated above. This report must not be used by the client to claim product certification, approval, or endorsement by CNAS or any government agencies.

## 1.2. Test facility

**CNAS (accreditation number: L2264)**

TA Technology (Shanghai) Co., Ltd. has obtained the accreditation of China National Accreditation Service for Conformity Assessment (CNAS).

**FCC (recognition number is 428261)**

TA Technology (Shanghai) Co., Ltd. has been listed on the US Federal Communications Commission list of test facilities recognized to perform electromagnetic emissions measurements.

**IC (recognition number is 8510A)**

TA Technology (Shanghai) Co., Ltd. has been listed by industry Canada to perform electromagnetic emission measurement.

**VCCI (recognition number is C-4595, T-2154, R-4113, G-766)**

TA Technology (Shanghai) Co., Ltd. has been listed by industry Japan to perform electromagnetic emission measurement.

**A2LA (Certificate Number: 3857.01)**

TA Technology (Shanghai) Co., Ltd. has been listed by American Association for Laboratory Accreditation to perform electromagnetic emission measurement.


*This report shall not be reproduced except in full, without the written approval of TA Technology (Shanghai) Co., Ltd.*

## 1.3. Testing Location

| | |
|---|---|
| Company: | TA Technology (Shanghai) Co., Ltd. |
| Address: | No.145, Jintang Rd, Tangzhen Industry Park, Pudong |
| City: | Shanghai |
| Post code: | 201201 |
| Country: | P. R. China |
| Contact: | Xu Kai |
| Telephone: | +86-021-50791141/2/3 |
| Fax: | +86-021-50791141/2/3-8000 |
| Website: | http://www.ta-shanghai.com |
| E-mail: | xukai@ta-shanghai.com |


*This report shall not be reproduced except in full, without the written approval of TA Technology (Shanghai) Co., Ltd.*

# 2. General Description of Equipment under Test

**Client Information**

| | |
|---|---|
| **Applicant** | ZTE Corporation |
| **Applicant address** | ZTE Plaza,Keji Road South, Hi-Tech Industrial Park, Nanshan District, Shenzhen, Guangdong, 518057, P.R. China |
| **Manufacturer** | ZTE Corporation |
| **Manufacturer address** | ZTE Plaza,Keji Road South, Hi-Tech Industrial Park, Nanshan District, Shenzhen, Guangdong, 518057, P.R. China |

**General information**

| **EUT Description** | |
|---|---|
| Model: | VFD 710 / Vodafone VFD 710 |
| Brand Name: | ZTE |
| Marketing Name: | Vodafone Smart V8 VFD 710 |
| Product IMEI | SIM 1: 355705080022648<br>SIM 2: 355705080022945 |
| Hardware Version: | VFD 710 MP |
| Software Version: | VFD-710_ATPB03;<br>VFD-710_ATPB03 /EG-Open-D_B03 |
| Power Supply: | Battery/AC adapter |
| Antenna Type: | Internal Antenna |
| Test Mode: | NFC |
| Modulation Type: | ASK |
| Operating Frequency Range(s) | 13.56MHz |
| **EUT Accessory** | |
| Adapter | Manufacturer: RUIJING<br>Model: STC-A515A-Z<br>Input power:100-240VAC 50-60Hz 300mA<br>Output power:5V DC 1500mA |
| Battery 1 | Manufacturer: SCUD (FUJIAN) Electronics Co., Ltd.<br>Model: Li3930T44P6h816437 |
| Battery 2 | Manufacturer: Harbin Coslight Power Co., Ltd.<br>Model: Li3930T44P6h816437 |
| Earphone | Manufacturer: GoerTek Inc.<br>Model: HA3-6 |
| USB Extend Cable | 100cm Cable, Shielded |


*This report shall not be reproduced except in full, without the written approval of TA Technology (Shanghai) Co., Ltd.*

Note: The information of the EUT is declared by the manufacturer.
Please refer to the specifications or user manual for details.

| Difference Configuration Statement | | |
|---|---|---|
| **Configuration** | **Configuration 1** | **Configuration 2** |
| Software Version | VFD-710_ATPB03 | VFD-710_ATPB03 /EG-Open-D_B03 |
| SIM Card Slot | SIM 1 | SIM 1, SIM 2 |
| Others | The same | The same |
| The difference between the two EUT is only the Software Version and the quantity of SIM Card Slot, however, only the Software Version of VFD-710_ATPB03 /EG-Open-D_B03 (with 2 SIM Card Slots) is refer to this report. | | |


*This report shall not be reproduced except in full, without the written approval of TA Technology (Shanghai) Co., Ltd.*

# 3. Applied Standards

According to the specifications of the manufacturer, it must comply with the requirements of the following standards:

**Test standards**

- **FCC CFR47 Part 2 (2016)**
- **FCC CFR47 Part 15C (2016)**
- **ANSI C63.10 (2013)**


*This report shall not be reproduced except in full, without the written approval of TA Technology (Shanghai) Co., Ltd.*

# 4. Test Configuration

## Test Mode

The EUT was programmed to be in continuously transmitting mode and the transmit duty cycle is not less than 98%.

The EUT has been associated with peripherals and configuration operated in a manner tended to maximize its emission characteristics in a typical application.


*This report shall not be reproduced except in full, without the written approval of TA Technology (Shanghai) Co., Ltd.*

# 5. Test Case Results

## 5.1. 20dB Bandwidth

### Ambient condition

| Temperature | Relative humidity | Pressure |
|---|---|---|
| 23°C ~25°C | 45%~50% | 101.5kPa |

### Method of Measurement

The EUT was connected to the spectrum analyzer through an external attenuator (20dB) and a known loss cable. RBW is set to 10 kHz; VBW is set to 3 times thw RBW on spectrum analyzer.

### Test Setup

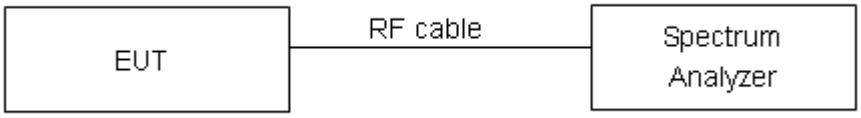


### Limits

No specific occupied bandwidth requirements in part 2.1049.

### Measurement Uncertainty

The assessed measurement uncertainty to ensure 95% confidence level for the normal distribution is with the coverage factor $k$ = 2, $U$= 936 Hz.


*This report shall not be reproduced except in full, without the written approval of TA Technology (Shanghai) Co., Ltd.*

## Test Results:

| Carrier frequency (MHz) | 99% Bandwidth (kHz) | 20dB Bandwidth (kHz) |
|---|---|---|
| 13.56MHz | 22.318 | 25.17 |

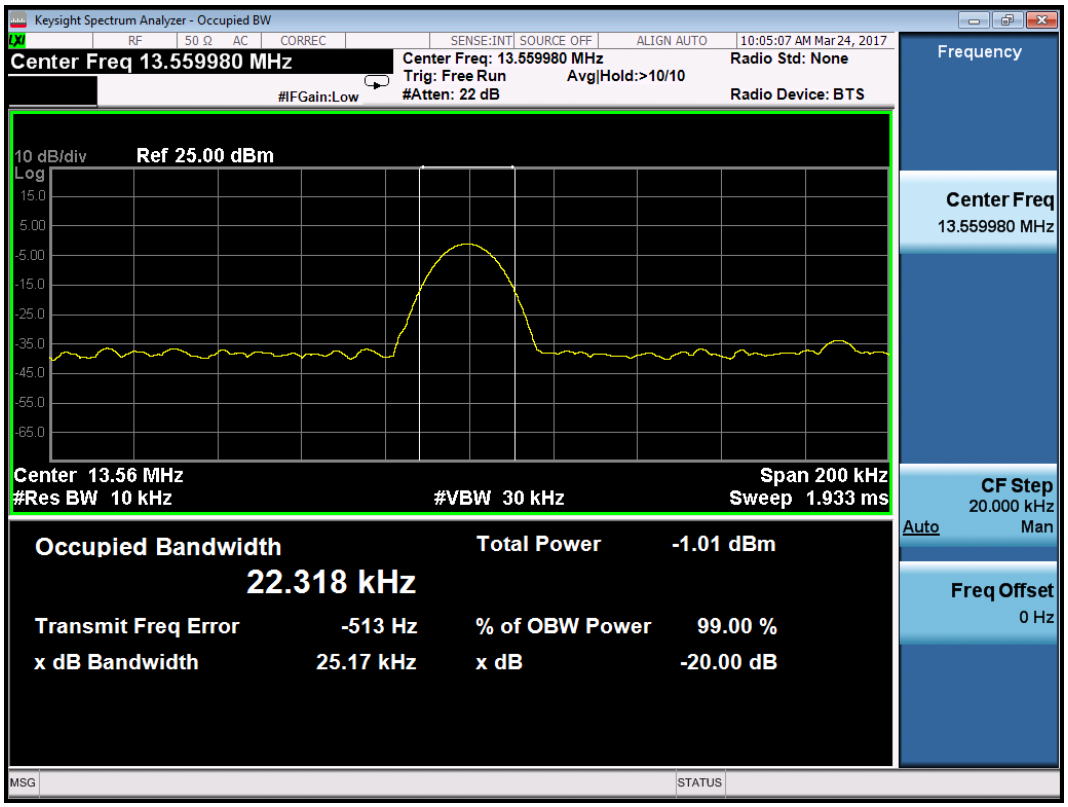



*This report shall not be reproduced except in full, without the written approval of TA Technology (Shanghai) Co., Ltd.*

## 5.2. Frequency Stability

**Ambient condition**

| Temperature | Relative humidity |
|---|---|
| 21°C ~25°C | 40%~60% |

**Method of Measurement**

1. Frequency Stability (Temperature Variation)
   The temperature inside the climate chamber is varied from -20°C to +50°C in 10°C step size,
   (1) With all power removed, the temperature was decreased to 0°C and permitted to stabilize for three hours.
   (2) Measure the carrier frequency with the test equipment in a “call mode”. These measurements should be made within 1 minute of powering up the mobile station, to prevent significant self warming.
   (3) Repeat the above measurements at 10°C increments from -20°C to +50°C. Allow at least 1.5 hours at each temperature, un-powered, before making measurements.
2. Frequency Stability (Voltage Variation)
   The frequency stability shall be measured with variation of primary supply voltage as follows:
   (1) Vary primary supply voltage from 85 to 115 percent of the nominal value for other than hand carried battery equipment.
   (2) For hand carried, battery powered equipment, reduce primary supply voltage to the battery-operating end point which shall be specified by the manufacturer.
   This transceiver is specified to operate with an input voltage of between 3.4 V and 4.4 V, with a nominal voltage of 3.85V.

**Test setup**

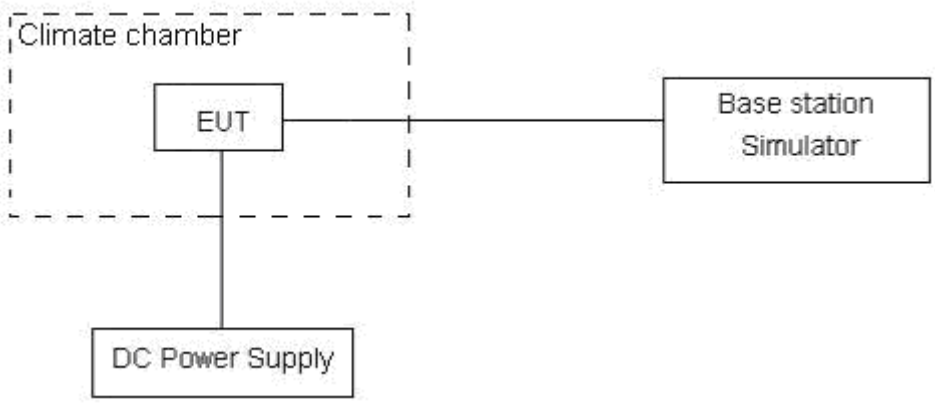



*This report shall not be reproduced except in full, without the written approval of TA Technology (Shanghai) Co., Ltd.*

**Limits**

Rule Part 15.225 (e) The frequency tolerance of the carrier signal shall be maintained within ±0.01% of the operating frequency over a temperature variation of −20 degrees to + 50 degrees C at normal supply voltage, and for a variation in the primary supply voltage from 85% to 115% of the rated supply voltage at a temperature of 20 degrees C. For battery operated equipment, the equipment tests shall be performed using a new battery.

**Measurement Uncertainty**

The assessed measurement uncertainty to ensure 99.75％ confidence level for the normal distribution is with the coverage factor $k$ = 3, $U$= 0.01ppm.


*This report shall not be reproduced except in full, without the written approval of TA Technology (Shanghai) Co., Ltd.*

**Test Result**

| Test status | Frequency | | | | Tolerance (MHz) | | | |
|---|---|---|---|---|---|---|---|---|
| | 13.56MHz | | | | | | | |
| | 1min | 2min | 5min | 10min | 1min | 2min | 5min | 10min |
| -20°C/3.85 V | 13.559353 | 13.559293 | 13.559304 | 13.559285 | 0.000647 | 0.000707 | 0.000696 | 0.000715 |
| -10°C/3.85 V | 13.559326 | 13.559283 | 13.559331 | 13.559281 | 0.000674 | 0.000717 | 0.000669 | 0.000719 |
| 0°C/3.85 V | 13.559297 | 13.559273 | 13.559291 | 13.559266 | 0.000703 | 0.000727 | 0.000709 | 0.000734 |
| 10°C/3.85 V | 13.559286 | 13.559282 | 13.559263 | 13.559252 | 0.000714 | 0.000718 | 0.000737 | 0.000748 |
| 20°C/3.85 V | 13.559255 | 13.559275 | 13.559279 | 13.559273 | 0.000745 | 0.000725 | 0.000721 | 0.000727 |
| 30°C/3.85 V | 13.559269 | 13.559266 | 13.559276 | 13.559269 | 0.000731 | 0.000734 | 0.000724 | 0.000731 |
| 40°C/3.85 V | 13.559264 | 13.559272 | 13.559255 | 13.559271 | 0.000736 | 0.000728 | 0.000745 | 0.000729 |
| 50°C/3.85 V | 13.559257 | 13.559265 | 13.559264 | 13.559273 | 0.000743 | 0.000735 | 0.000736 | 0.000727 |
| 20°C/3.4 V | 13.559254 | 13.559262 | 13.559261 | 13.559264 | 0.000746 | 0.000738 | 0.000739 | 0.000736 |
| 20°C/4.4 V | 13.559264 | 13.559263 | 13.559254 | 13.559263 | 0.000736 | 0.000737 | 0.000746 | 0.000737 |

| Test status | Tolerance (%) | | | | Limit(%) | Conclusion |
|---|---|---|---|---|---|---|
| | 1min | 2min | 5min | 10min | | |
| -20°C/3.85 V | 0.004771 | 0.005214 | 0.005133 | 0.005273 | 0.01 | PASS |
| -10°C/3.85 V | 0.004971 | 0.005288 | 0.004934 | 0.005302 | 0.01 | PASS |
| 0°C/3.85 V | 0.005184 | 0.005361 | 0.005229 | 0.005413 | 0.01 | PASS |
| 10°C/3.85 V | 0.005265 | 0.005295 | 0.005435 | 0.005516 | 0.01 | PASS |
| 20°C/3.85 V | 0.005494 | 0.005347 | 0.005317 | 0.005361 | 0.01 | PASS |
| 30°C/3.85 V | 0.005391 | 0.005413 | 0.005339 | 0.005391 | 0.01 | PASS |
| 40°C/3.85 V | 0.005428 | 0.005369 | 0.005494 | 0.005376 | 0.01 | PASS |
| 50°C/3.85 V | 0.005479 | 0.005420 | 0.005428 | 0.005361 | 0.01 | PASS |
| 20°C/3.4 V | 0.005501 | 0.005442 | 0.005450 | 0.005428 | 1.01 | PASS |
| 20°C/4.4 V | 0.005428 | 0.005435 | 0.005501 | 0.005435 | 2.01 | PASS |


*This report shall not be reproduced except in full, without the written approval of TA Technology (Shanghai) Co., Ltd.*

## 5.3. Radiates Emission

**Ambient condition**

| Temperature | Relative humidity | Pressure |
|---|---|---|
| 23°C ~25°C | 45%~50% | 102.5kPa |

**Method of Measurement**

The test set-up was made in accordance to the general provisions of ANSI C63.10-2013.The Equipment Under Test (EUT) was set up on a non-conductive table in the semi-anechoic chamber. The test was performed at the distance of 3 m between the EUT and the receiving antenna. The radiated emissions measurements were made in a typical installation configuration.
Sweep the whole frequency band through the range from 9 kHz to the 10th harmonic of the carrier, and the emissions less than 20 dB below the permissible value are reported.

During the test, below 30MHz, the center of the loop shall be 1 meters; above 30MHz, the height of receive antenna shall be moved from 1 to 4 meters, and the antenna shall be performed under horizontal and vertical polarization. The turntable shall be rotated from 0 to 360 degrees for detecting the maximum of radiated spurious signal level. The measurements shall be repeated with orthogonal polarization of the test antenna. The data of cable loss and antenna factor has been calibrated in full testing frequency range before the testing.
Set the spectrum analyzer in the following:
Below 1GHz (detector: Peak and Quasi-Peak)
RBW=100 kHz / VBW=300 kHz / Sweep=AUTO
Above 1GHz (detector: Peak):
(a) PEAK: RBW=1MHz VBW=3MHz/ Sweep=AUTO
(b) AVERAGE: RBW=1MHz / VBW=3MHz / Sweep=AUTO

The radiated emission was measured in the following position: EUT stand-up position (Z axis), lie-down position (X, Y axis). The worst emission was found in stand-up position (Z axis) and the worst case was recorded.

The test is in transmitting mode.


*This report shall not be reproduced except in full, without the written approval of TA Technology (Shanghai) Co., Ltd.*

**Test setup**

**9kHz~~~ 30MHz**

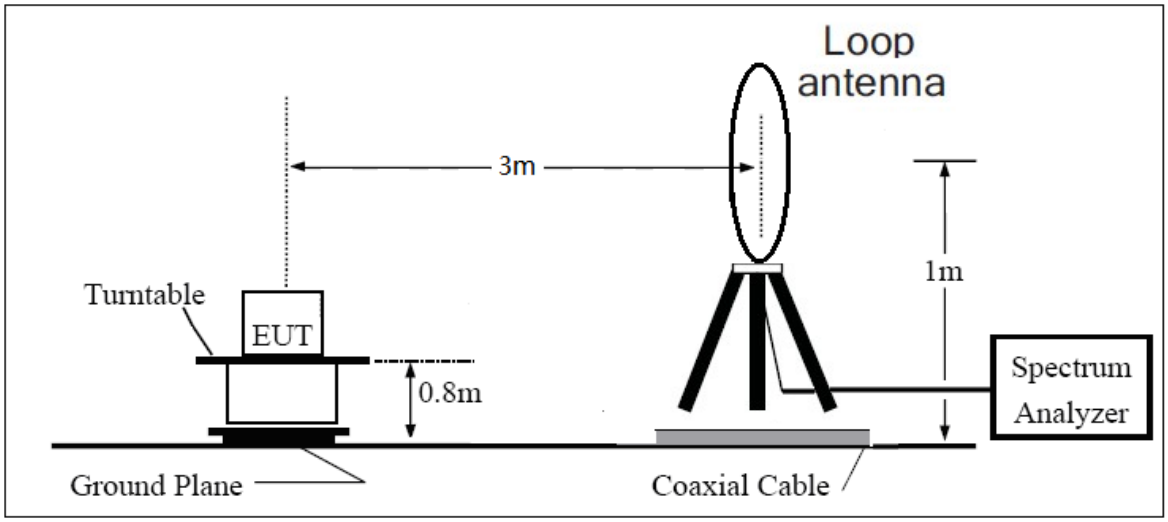


**30MHz~~~ 1GHz**

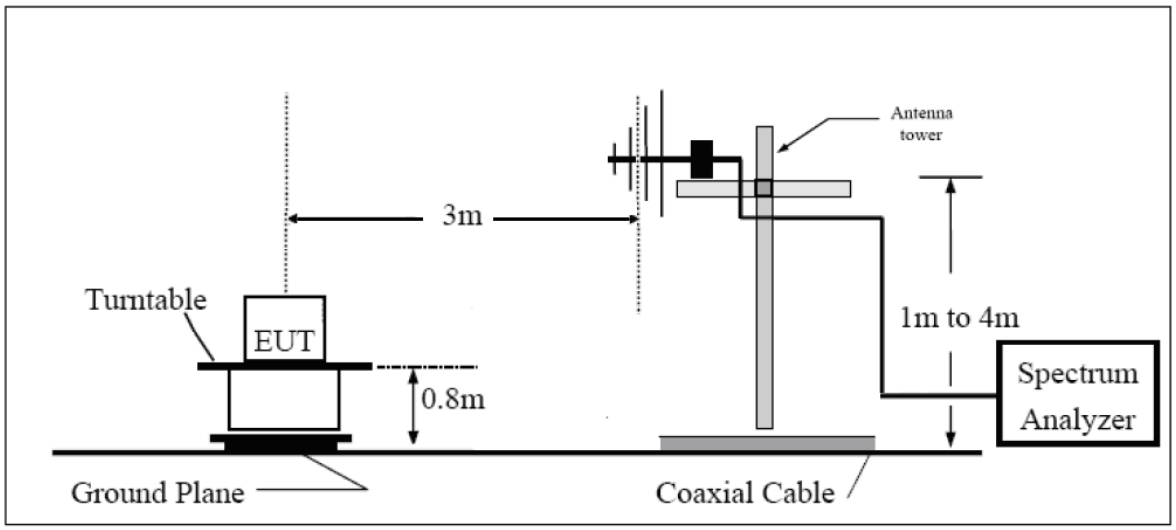


**Above 1GHz**

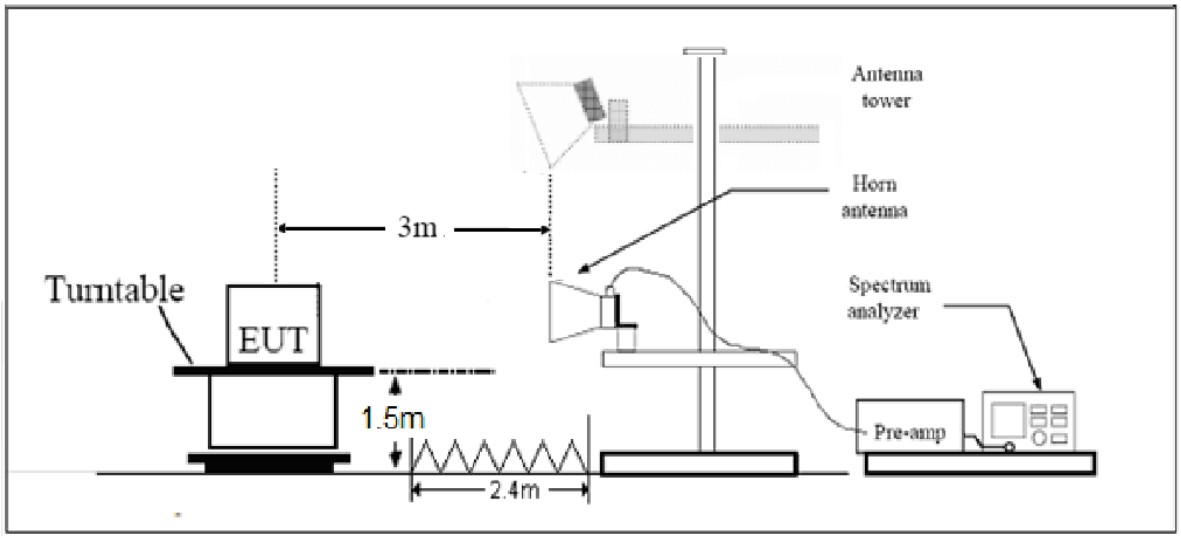


Note: Area side:2.4mX3.6m


*This report shall not be reproduced except in full, without the written approval of TA Technology (Shanghai) Co., Ltd.*

**Limits**

Clause 15.225(a) the field strength of any emissions within the band 13.553-13.567 MHz shall not exceed 15,848 microvolts/meter at 30 meters.
Clause 15.225(b) within the bands 13.410-13.553 MHz and 13.567-13.710 MHz, the field strength of any emissions shall not exceed 334 microvolts/meter at 30 meters.
Clause 15.225(c) within the bands 13.110-13.410 MHz and 13.710-14.010 MHz the field strength of any emissions shall not exceed 106 microvolts/meter at 30 meters.
Clause 15.225(d) The field strength of any emissions appearing outside of the 13.110-14.010 MHz band shall not exceed the general radiated emission limits in §15.209.
§15.209 (a) Except as provided elsewhere in this subpart, the emissions from an intentional radiator shall not exceed the field strength levels specified in the following table:

| Frequency of emission (MHz) | Field strength(uV/m) | Field strength(dBuV/m) |
|---|---|---|
| 0.009–0.490 | 2400/F(kHz) | / |
| 0.490–1.705 | 24000/F(kHz) | / |
| 1.705–30.0 | 30 | / |
| 30-88 | 100 | 40 |
| 88-216 | 150 | 43.5 |
| 216-960 | 200 | 46 |
| Above960 | 500 | 54 |

**Except as provided in paragraph (g), fundamental emissions from intentional radiators operating under this section shall not be located in the frequency bands 54-72 MHz, 76-88 MHz, 174-216 MHz or 470-806 MHz. However, operation within these frequency bands is permItted under other sections of this part, e.g., §§15.231 and 15.241.

§15.209 (b) In the emission table above, the tighter limit applies at the band edges.

§15.209 (d) The emission limits shown in the above table are based on measurements employing a CISPR quasi-peak detector except for the frequency bands 9-90 kHz, 110-490 kHz and above 1000 MHz. Radiated emission limits in these three bands are based on measurements employing an average detector.

**Measurement Uncertainty**

The assessed measurement uncertainty to ensure 95% confidence level for the normal distribution is with the coverage factor $k$ = 1.96.

| Frequency | Uncertainty |
|---|---|
| 9kHz-30MHz | 3.55 dB |
| 30MHz-200MHz | 4.19 dB |
| 200MHz-1GHz | 3.63 dB |
| Above 1GHz | 3.68 dB |


*This report shall not be reproduced except in full, without the written approval of TA Technology (Shanghai) Co., Ltd.*

**Test result**

**In-band**

FCC RE Part15C 13.56M

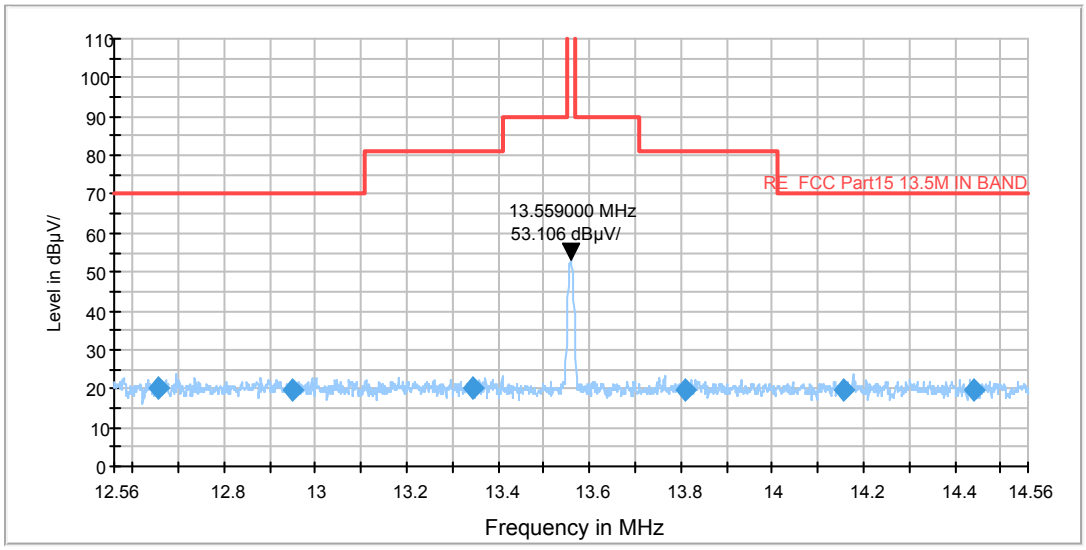


Radiates Emission from 12.56MHz to 14.56MHz

Note: This graph displays the maximum values of horizontal and vertical by software


*This report shall not be reproduced except in full, without the written approval of TA Technology (Shanghai) Co., Ltd.*

**Out-of-band**

The following graphs display the maximum values of horizontal and vertical by software.
For above 1GHz, Blue trace uses the peak detection, Green trace uses the average detection.

FCC RE 9K-90KHz AV

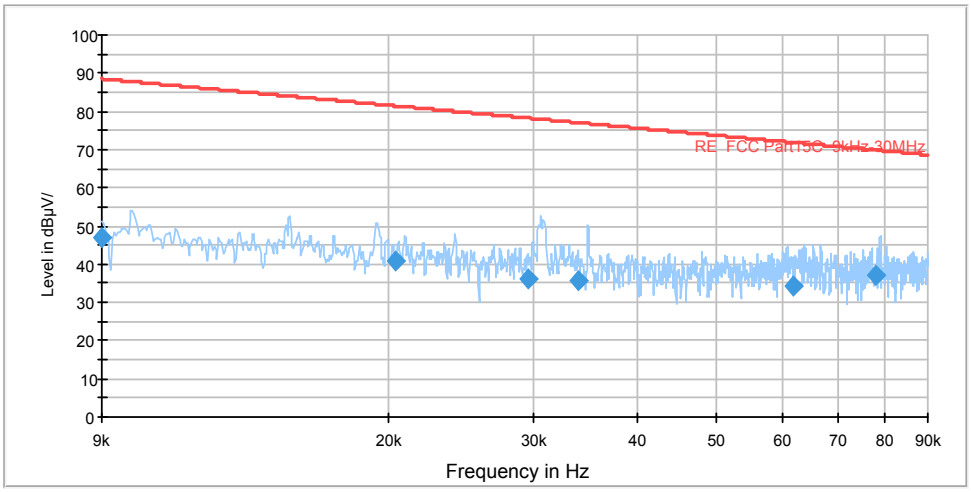


Radiates Emission from 9kHz to 90kHz

FCC RE 90K-110KHz QP

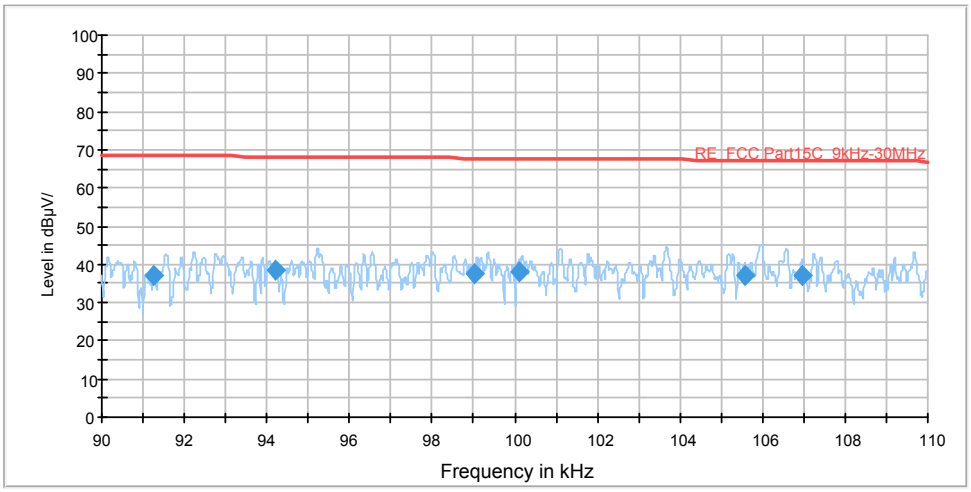


Radiates Emission from 90kHz to 110kHz


*This report shall not be reproduced except in full, without the written approval of TA Technology (Shanghai) Co., Ltd.*

FCC RE 110K-490KHz AV

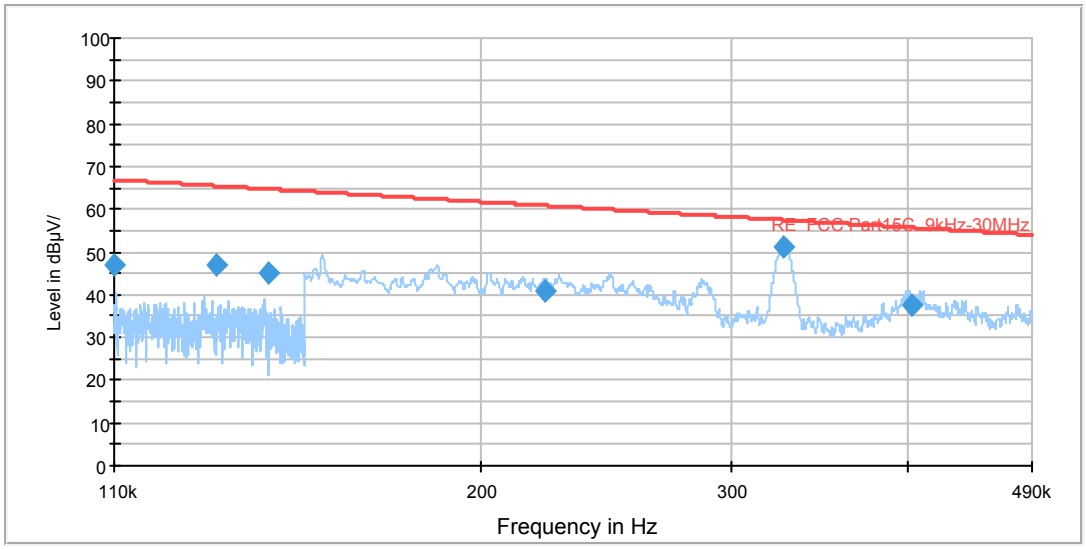


Radiates Emission from 110kHz to 490kHz

| Frequency (MHz) | Average (dB µ V/m) | Height (cm) | Azimuth (deg) | Reading value (dBuV/m) | Correct Factor (dB) | Margin (dB) | Limit (dBuV/m) |
|---|---|---|---|---|---|---|---|
| 0.110000 | 47.0 | 100.0 | 0.0 | 22.3 | 24.7 | 19.9 | 66.9 |
| 0.130000 | 47.1 | 100.0 | 0.0 | 23.1 | 24.0 | 18.4 | 65.5 |
| 0.141210 | 45.1 | 100.0 | 0.0 | 21.5 | 23.6 | 19.6 | 64.7 |
| 0.221560 | 41.1 | 100.0 | 0.0 | 19.7 | 21.4 | 19.8 | 60.9 |
| 0.327330 | 51.1 | 100.0 | 0.0 | 30.4 | 20.7 | 6.4 | 57.5 |
| 0.402720 | 37.6 | 100.0 | 0.0 | 17.4 | 20.2 | 18.1 | 55.7 |

**Remark: 1. Quasi-Peak = Reading value + Correction factor**

**2. Correction Factor = Antenna factor+ Insertion loss (cable loss+amplifier gain)**

**3. Margin = Limit – Quasi-Peak**


*This report shall not be reproduced except in full, without the written approval of TA Technology (Shanghai) Co., Ltd.*

FCC RE 490K-30MHz QP

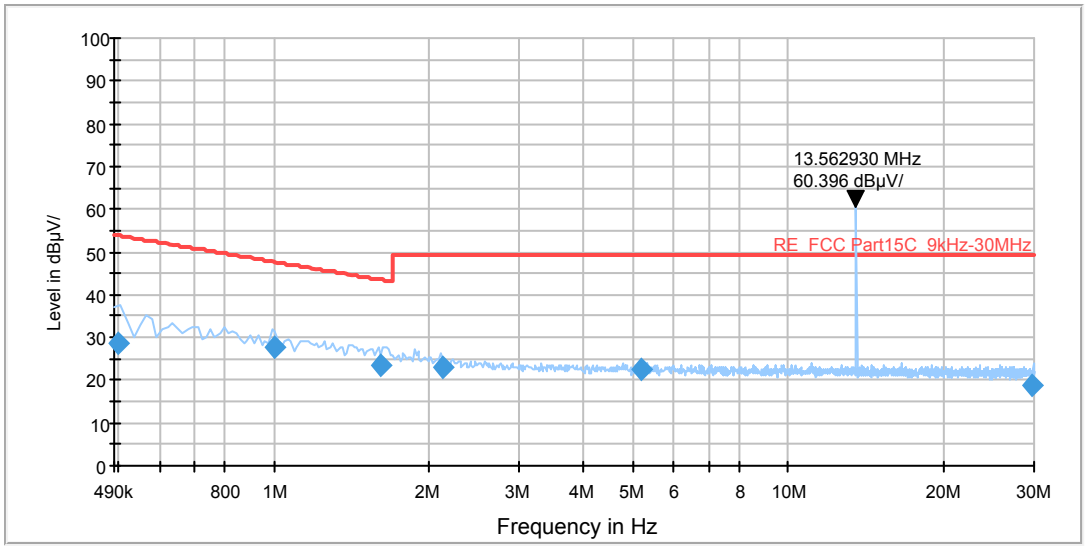


Radiates Emission from 490kHz to 30MHz

FCC RE 0.03-1GHz QP Class B

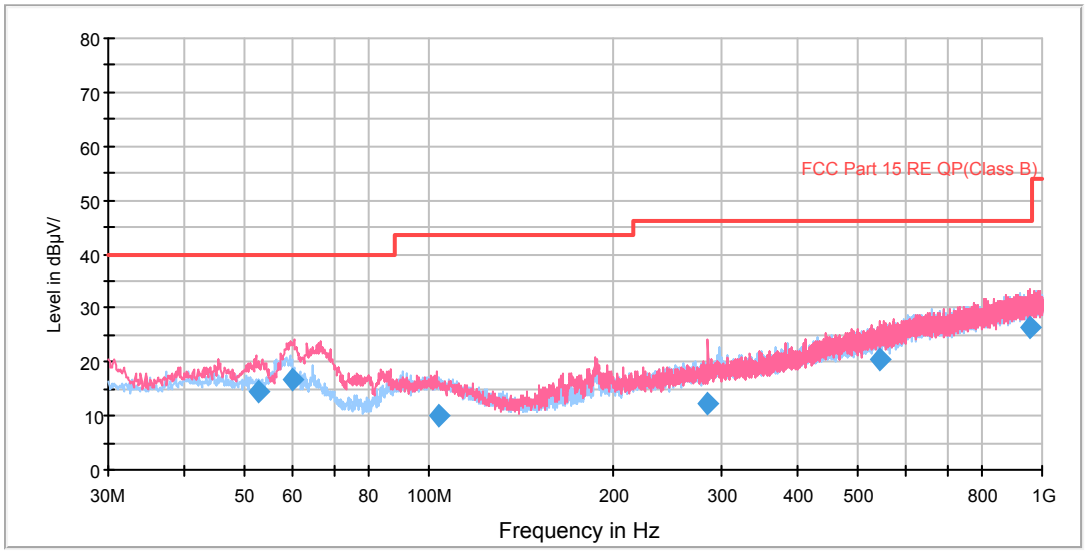


Radiates Emission from 30MHz to 1GHz

Note: This graph displays the maximum values of horizontal and vertical by software


*This report shall not be reproduced except in full, without the written approval of TA Technology (Shanghai) Co., Ltd.*

## 5.4. Conducted Emission

**Ambient condition**

| Temperature | Relative humidity | Pressure |
|---|---|---|
| 23°C ~25°C | 45%~50% | 101.5kPa |

**Methods of Measurement**

The EUT is placed on a non-metallic table of 80cm height above the horizontal metal reference ground plane. During the test, the EUT was operating in its typical mode. The test method is according to ANSI C63.10-2013. Connect the AC power line of the EUT to the L.I.S.N. Use EMI receiver to detect the average and Quasi-peak value. RBW is set to 9 kHz, VBW is set to 30kHz. The measurement result should include both L line and N line.
The test is in transmitting mode.

**Test Setup**

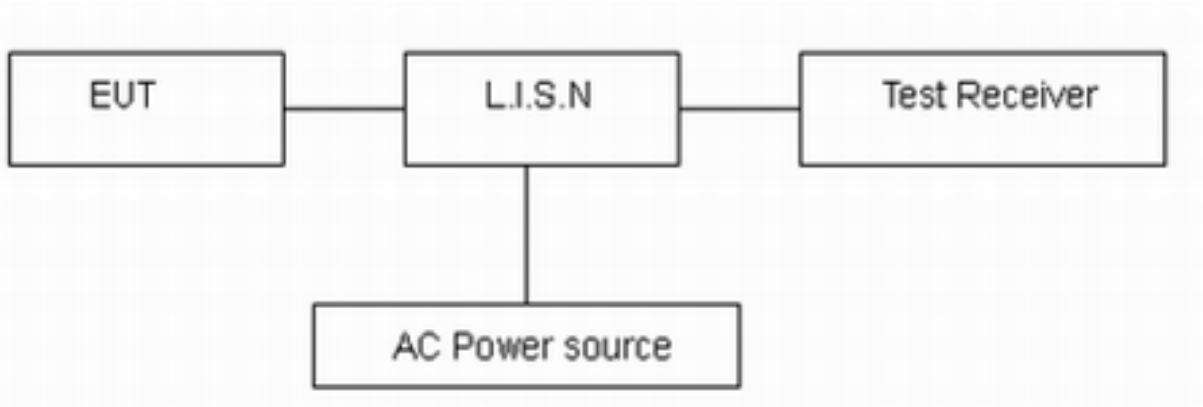


Note: AC Power source is used to change the voltage 110V/60Hz.


*This report shall not be reproduced except in full, without the written approval of TA Technology (Shanghai) Co., Ltd.*

**Limits**

§15.207 (a) Except as shown in paragraphs (b) and (c) of this section, for an intentional radiator that is designed to be connected to the public utility (AC) power line, the radio frequency voltage that is conducted back onto the AC power line on any frequency or frequencies, within the band 150 kHz to 30 MHz, shall not exceed the limits in the following table, as measured using a 50 μH/50 ohms line impedance stabilization network (LISN). Compliance with the provisions of this paragraph shall be based on the measurement of the radio frequency voltage between each power line and ground at the power terminal. The lower limit applies at the boundary between the frequency ranges.

| Frequency (MHz) | Conducted Limits(dBμV) | |
|---|---|---|
| | Quasi-peak | Average |
| 0.15 - 0.5 | 66 to 56 * | 56 to 46* |
| 0.5 - 5 | 56 | 46 |
| 5 - 30 | 60 | 50 |
| *: Decreases with the logarithm of the frequency. | | |

**Measurement Uncertainty**

The assessed measurement uncertainty to ensure 95% confidence level for the normal distribution is with the coverage factor $k$ = 1.96, $U$= 2.69 dB.


*This report shall not be reproduced except in full, without the written approval of TA Technology (Shanghai) Co., Ltd.*

## Test Results:

Following plots, Blue trace uses the peak detection and Green trace uses the average detection.

### L Line

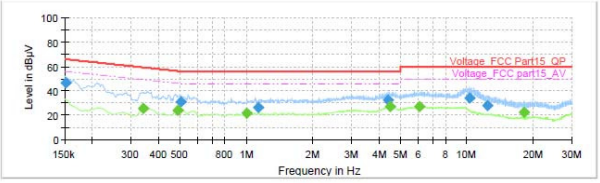


**Final_Result**

| Frequency (MHz) | QuasiPeak (dBµV) | Average (dBµV) | Limit (dBµV) | Margin (dB) | Meas. Time (ms) | Bandwidth (kHz) | Line | Filter | Corr. (dB) |
|---|---|---|---|---|---|---|---|---|---|
| 0.152250 | 46.61 | --- | 65.88 | 19.27 | 1000.0 | 9.000 | L1 | ON | 19.0 |
| 0.339000 | --- | 25.64 | 49.23 | 23.59 | 1000.0 | 9.000 | L1 | ON | 19.2 |
| 0.487500 | --- | 24.29 | 46.21 | 21.92 | 1000.0 | 9.000 | L1 | ON | 19.2 |
| 0.503250 | 30.68 | --- | 56.00 | 25.32 | 1000.0 | 9.000 | L1 | ON | 19.2 |
| 1.002750 | --- | 21.77 | 46.00 | 24.23 | 1000.0 | 9.000 | L1 | ON | 19.2 |
| 1.133250 | 26.43 | --- | 56.00 | 29.57 | 1000.0 | 9.000 | L1 | ON | 19.2 |
| 4.404750 | 32.82 | --- | 56.00 | 23.18 | 1000.0 | 9.000 | L1 | ON | 19.1 |
| 4.467750 | --- | 26.82 | 46.00 | 19.18 | 1000.0 | 9.000 | L1 | ON | 19.1 |
| 6.101250 | --- | 26.99 | 50.00 | 23.01 | 1000.0 | 9.000 | L1 | ON | 19.1 |
| 10.290750 | 34.36 | --- | 60.00 | 25.64 | 1000.0 | 9.000 | L1 | ON | 19.4 |
| 12.356250 | 27.70 | --- | 60.00 | 32.30 | 1000.0 | 9.000 | L1 | ON | 19.4 |
| 18.246750 | --- | 22.72 | 50.00 | 27.28 | 1000.0 | 9.000 | L1 | ON | 19.5 |

### N Line

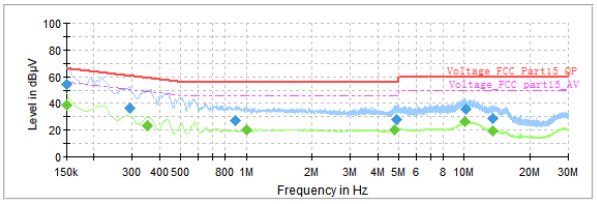


**Final_Result**

| Frequency (MHz) | QuasiPeak (dBµV) | Average (dBµV) | Limit (dBµV) | Margin (dB) | Meas. Time (ms) | Bandwidth (kHz) | Line | Filter | Corr. (dB) |
|---|---|---|---|---|---|---|---|---|---|
| 0.150000 | --- | 38.46 | 56.00 | 17.54 | 1000. | 9.000 | N | ON | 19.1 |
| 0.150000 | 54.22 | --- | 66.00 | 11.78 | 1000. | 9.000 | N | ON | 19.1 |
| 0.291750 | 36.10 | --- | 60.47 | 24.37 | 1000. | 9.000 | N | ON | 19.2 |
| 0.352500 | --- | 23.07 | 48.90 | 25.84 | 1000. | 9.000 | N | ON | 19.2 |
| 0.888000 | 27.16 | --- | 56.00 | 28.84 | 1000. | 9.000 | N | ON | 19.2 |
| 1.005000 | --- | 20.19 | 46.00 | 25.81 | 1000. | 9.000 | N | ON | 19.2 |
| 4.787250 | --- | 19.79 | 46.00 | 26.21 | 1000. | 9.000 | N | ON | 19.1 |
| 4.888500 | 27.76 | --- | 56.00 | 28.24 | 1000. | 9.000 | N | ON | 19.1 |
| 10.065750 | --- | 26.52 | 50.00 | 23.48 | 1000. | 9.000 | N | ON | 19.4 |
| 10.187250 | 35.63 | --- | 60.00 | 24.37 | 1000. | 9.000 | N | ON | 19.4 |
| 13.472250 | --- | 19.73 | 50.00 | 30.27 | 1000. | 9.000 | N | ON | 19.5 |
| 13.503750 | 28.78 | --- | 60.00 | 31.22 | 1000. | 9.000 | N | ON | 19.5 |


*This report shall not be reproduced except in full, without the written approval of TA Technology (Shanghai) Co., Ltd.*

# 6. Main Test Instruments

| Name | Type | Manufacturer | Serial Number | Calibration Date | Expiration Time |
|---|---|---|---|---|---|
| Spectrum Analyzer | FSV30 | R&S | 100815 | 2016-12-16 | 2017-12-15 |
| EMI Test Receiver | ESCI | R&S | 100948 | 2016-06-01 | 2017-05-31 |
| TRILOG Broadband Antenna | VULB 9163 | Schwarzbeck | 9163-201 | 2014-12-06 | 2017-12-05 |
| Loop Antenna | FMZB1519 | SCHWARZBECK | 1519-047 | 2017-02-18 | 2020-02-17 |
| EMI Test Receiver | ESCS30 | R&S | 100138 | 2016-12-16 | 2017-12-15 |
| LISN | ENV216 | R&S | 101171 | 2016-12-17 | 2019-12-16 |
| Spectrum Analyzer | N9010A | Agilent | MY47191109 | 2016-05-21 | 2017-05-20 |
| MOB COMMS DC SUPPLY | 66319D | Agilent | MY43004105 | 2016-05-21 | 2017-05-20 |
| RF Cable | SMA 15cm | Agilent | 0001 | 2017-01-04 | 2017-04-03 |

*******END OF REPORT *******


*This report shall not be reproduced except in full, without the written approval of TA Technology (Shanghai) Co., Ltd.*

# ANNEX A: EUT Appearance and Test Setup

## A.1 EUT Appearance

Picture 1-1: EUT


*This report shall not be reproduced except in full, without the written approval of TA Technology (Shanghai) Co., Ltd.*

Picture 1-2: Adapter

Picture 1-3: USB cable

**Picture 1 EUT and Accessory**


*This report shall not be reproduced except in full, without the written approval of TA Technology (Shanghai) Co., Ltd.*

## A.2 Test Setup

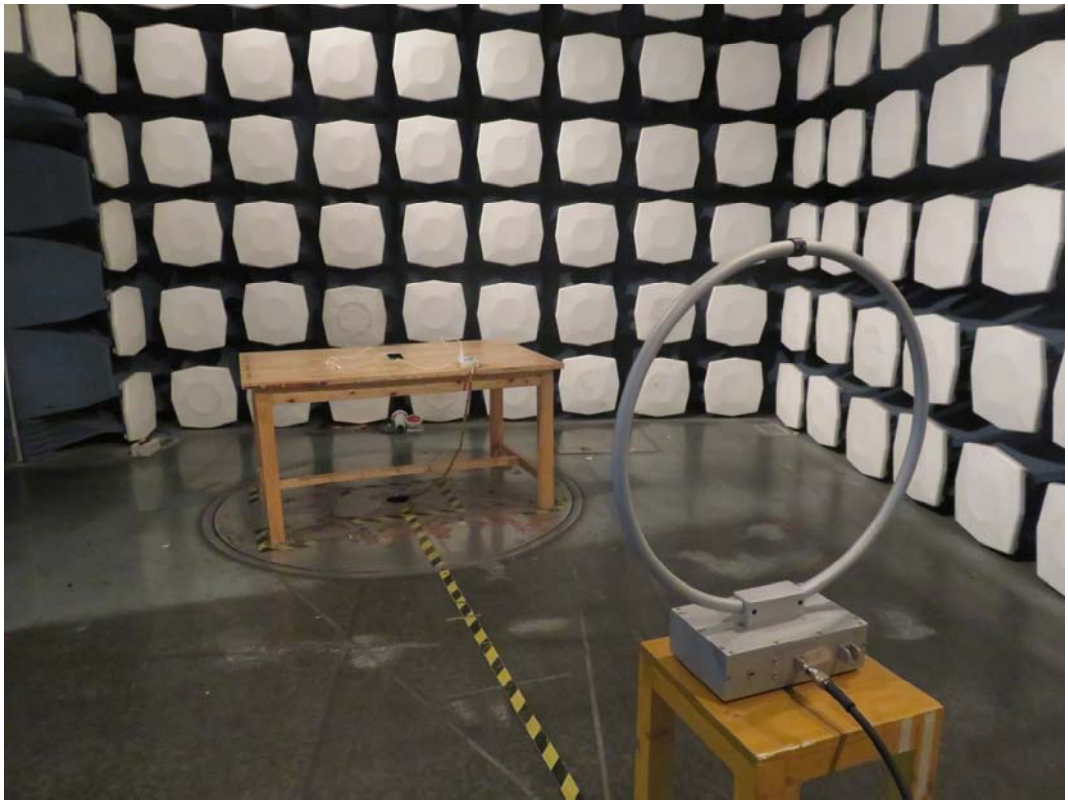

9kHz - 30MHz

30M Hz-1GHz

**Picture 2 Radiated Emission Test Setup**


*This report shall not be reproduced except in full, without the written approval of TA Technology (Shanghai) Co., Ltd.*

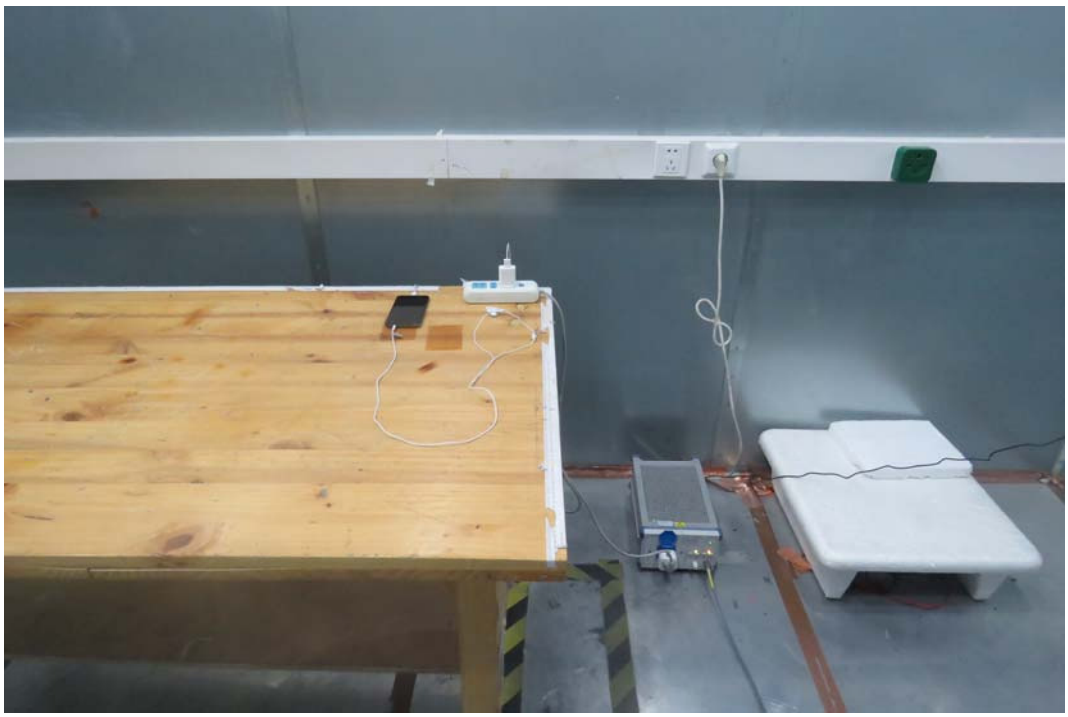

**Picture 3 Conducted Emission Test Setup**


*This report shall not be reproduced except in full, without the written approval of TA Technology (Shanghai) Co., Ltd.*