HAC TEST REPORT

Applicant	ZTE Corporation
FCC ID	SRQ-Z7540
Product	5G NR Multi-Mode Digital Mobile Phone
Model	Z7540
Report No.	R2202A0144-H1
Issue Date	March 17, 2022

TA Technology (Shanghai) Co., Ltd. tested the above equipment in accordance with the requirements in **ANSI C63.19-2011.** The test results show that the equipment tested is capable of demonstrating compliance with the requirements as documented in this report.

Fangying Wei　　Guangchang Fan

Prepared by: Fangying Wei　　*Approved by: Guangchang Fan*

TA Technology (Shanghai) Co., Ltd.

No.145, Jintang Rd, Tangzhen Industry Park, Pudong Shanghai, China

TEL: +86-021-50791141/2/3

FAX: +86-021-50791141/2/3-8000

Table of Contents

1 Test Laboratory 3
1.1 Notes of the Test Report 3
1.2. Test facility 3
1.2 Testing Location 3
1.3 Laboratory Environment 4
2 Statement of Compliance 5
3 Description of Equipment under Test 6
4 Test Specification and Operational Conditions 8
4.1 Test Specification 8
5 Test Information 9
5.1 Operational Conditions during Test 9
5.1.1 General Description of Test Procedures 9
5.2 HAC RF Measurements System Configuration 9
5.2.1 HAC Measurement Set-up 9
5.2.2 Probe System 10
5.2.3 Test Arch Phantom & Phone Positioner 11
5.3 RF Test Procedures 12
5.4 System Check 14
5.5 Modulation Interference Factor 15
5.6 Justification of Held to Ear Modes Tested 16
5.6.1 Analysis of RF Air Interface Technologies 16
5.6.2 Average Antenna Input Power & Evaluation for Low-power Exemption 16
6 Test Results 18
6.1 ANSI C63.19-2011 Limits 18
6.2 Summary Test Results 19
7 Measurement Uncertainty 20
8 Main Test Instruments 21
ANNEX A: System Check Results 22
ANNEX B: Graph Results 24
ANNEX C: E-Probe Calibration Certificate 30
ANNEX D: CD2600V3 Dipole Calibration Certificate 52
ANNEX E: DAE4 Calibration Certificate 57
ANNEX F: The EUT Appearances 62
ANNEX G: Test Setup Photos 63

This report shall not be reproduced except in full, without the written approval of TA Technology (Shanghai) Co., Ltd.

1 Test Laboratory

1.1 Notes of the Test Report

This report shall not be reproduced in full or partial, without the written approval of **TA Technology (Shanghai) Co., Ltd.** The results documented in this report apply only to the tested sample, under the conditions and modes of operation as described herein .Measurement Uncertainties were not taken into account and are published for informational purposes only. This report is written to support regulatory compliance of the applicable standards stated above.

1.2. Test facility

FCC (Designation number: CN1179, Test Firm Registration Number: 446626)

TA Technology (Shanghai) Co., Ltd. has been listed on the US Federal Communications Commission list of test facilities recognized to perform measurements.

A2LA (Certificate Number: 3857.01)

TA Technology (Shanghai) Co., Ltd. has been listed by American Association for Laboratory Accreditation to perform measurement.

1.2 Testing Location

Company:	TA Technology (Shanghai) Co., Ltd.
Address:	No.145, Jintang Rd, Tangzhen Industry Park, Pudong Shanghai, China
City:	Shanghai
Post code:	201201
Country:	P. R. China
Contact:	Fan Guangchang
Telephone:	+86-021-50791141/2/3
Fax:	+86-021-50791141/2/3-8000
Website:	http://www.ta-shanghai.com
E-mail:	fanguangchang@ta-shanghai.com

This report shall not be reproduced except in full, without the written approval of TA Technology (Shanghai) Co., Ltd.

1.3 Laboratory Environment

Temperature	Min. = 18°C, Max. = 28 °C
Relative humidity	Min. = 0%, Max. = 80%
Ground system resistance	< 0.5 Ω
Ambient noise is checked and found very low and in compliance with requirement of standards. Reflection of surrounding objects is minimized and in compliance with requirement of standards.	

This report shall not be reproduced except in full, without the written approval of TA Technology (Shanghai) Co., Ltd.

2 Statement of Compliance

Table 2.1: The Total M-rating of each tested band

Mode	Rating
WCDMA & LTE – FDD & Wi-Fi	**M4**
LTE TDD 41	**M4**
The Total M-rating is M4	
Date of Testing: February 28, 2022	
Date of Sample Receiving: February 14, 2022	
Note: 1. Refer to section 7 Evaluation for Low-power Exemption. WCDMA and LTE mode applicable air-interfaces are exempt from testing in accordance with C63.19-2011 Clause 4.4 and are rated M4. 2. All indications of Pass/Fail in this report are opinions expressed by TA Technology (Shanghai) Co., Ltd. based on interpretations and/or observations of test results. Measurement Uncertainties were not taken into account and are published for informational purposes only.	

This report shall not be reproduced except in full, without the written approval of TA Technology (Shanghai) Co., Ltd.

3 Description of Equipment under Test

Client Information

Applicant	ZTE Corporation
Applicant address	ZTE Plaza, Keji Road South, Hi-Tech, Industrial Park, Nanshan District, Shenzhen, Guangdong, 518057, P.R.China
Manufacturer	ZTE Corporation
Manufacturer address	ZTE Plaza, Keji Road South, Hi-Tech, Industrial Park, Nanshan District, Shenzhen, Guangdong, 518057, P.R.China

General Technologies

Device Type	Portable Device	
State of Sample	Prototype Unit	
Model	Z7540	
IMEI	866787060002974	
Hardware Version	Z7540HW1.0	
Software Version	Z7540_CCV1.0.0B01	
Antenna Type:	FPC Antenna	
Power Class:	WCDMA Band II/IV/V: 3 LTE FDD 2/4/5/12/66/71:3 LTE TDD 41:2	
Power Level	WCDMA Band II/IV/V: All up bits LTE FDD 2/4/5/12/66/71: max power LTE TDD 41: max power	
Test Modulation:	(WCDMA) QPSK; (LTE) QPSK, 16QAM;	
Operating Frequency Range(s):	**Mode**	**Tx (MHz)**
	WCDMA Band II	1850 ~ 1910
	WCDMA Band IV	1710 ~ 1755
	WCDMA Band V	824 ~ 849
	LTE FDD 2	1850 ~ 1910
	LTE FDD 4	1710 ~ 1755
	LTE FDD 5	824 ~ 849
	LTE FDD 12	699 ~ 716
	LTE TDD 41	2496 ~2690
	LTE FDD 66	1710 ~ 1780
	LTE FDD 71	663 ~ 698
	Wi-Fi 2.4G	2400 ~ 2483.5
	Wi-Fi 5G U-NII-1	5150 ~ 5250
	Wi-Fi 5G U-NII-3	5725 ~ 5850
	Bluetooth	2400 ~ 2483.5
Accessory Equipment		
Battery	Manufacturer: SCUD (Fujian) Electronics Co., LTD. Model: Li3949T44P8h906450	

This report shall not be reproduced except in full, without the written approval of TA Technology (Shanghai) Co., Ltd.

Note: The EUT is sent from the applicant to TA and the information of the EUT is declared by the applicant.

Air-Interface	Band (MHz)	Type	ANSI C63.19 tested	Simultaneous Transmissions	Voice over Digital Transport OTT Capability	Name of Voice Service	Power Reduction
WCDMA	Band II	VO	Yes	Yes BT or Wi-Fi	N/A	#	No
	Band IV						
	Band V						
	HSPA	DT	No		No		
LTE	LTE FDD 2	VD	Yes	Yes BT or Wi-Fi	No	Yes##	No
	LTE FDD 4						
	LTE FDD 5						
	LTE FDD 12						
	LTE TDD 41						
	LTE FDD 66						
	LTE FDD 71						
Wi-Fi	2450	VD	Yes	Yes WCDMA, LTE	N/A	VoWi-Fi	No
	5200 (U-NII-1)	VD	Yes	Yes WCDMA, LTE	N/A	VoWi-Fi	No
	5800 (U-NII-3)	VD	Yes	Yes WCDMA, LTE	N/A	VoWi-Fi	No
Bluetooth (BT)	2450	DT	No	Yes WCDMA, LTE	N/A	NA	No

VO= legacy Cellular Voice Service from Table 7.1 in 7.4.2.1 of ANSI C63.19-2011
DT= Digital Transport only (no voice)
VD= IP voice service over digital transport.
#: Ref Lev in accordance with 7.4.2.1 of ANSI C63.19-2011
##: Ref Lev in accordance with the July 2012 VoLTE interpretation.
Remark:
1. It applies the low power exemption based on ANSI C63.19-2011

This report shall not be reproduced except in full, without the written approval of TA Technology (Shanghai) Co., Ltd.

4 Test Specification and Operational Conditions

4.1 Test Specification

The tests documented in this report were performed in accordance with the following:

FCC CFR47 Part 20.19
ANSI C63.19-2011
KDB 285076 D01 HAC Guidance v05r01
KDB 285076 D02 T-Coil Testing v03r01

This report shall not be reproduced except in full, without the written approval of TA Technology (Shanghai) Co., Ltd.

5 Test Information

5.1 Operational Conditions during Test

5.1.1 General Description of Test Procedures

The phone was tested in all normal configurations for the ear use. The EUT is mounted in the device holder equivalent as for classic dosimeter measurements. The acoustic output of the EUT shall coincide with the center point of the area formed by the dielectric wire and the middle bar of the arch's top frame The EUT shall be moved vertically upwards until it touches the frame. The fine adjustment is possible by sliding the complete. The EUT holder is on the yellow base plate of the Test Arch phantom. These test configurations are tested at the high, middle and low frequency channels of each applicable operating mode.

A communication link is set up with a System Simulator (SS) by air link, and a call is established. The EUT is commanded to operate at maximum transmitting power.

5.2 HAC RF Measurements System Configuration

5.2.1 HAC Measurement Set-up

These measurements are performed using the DASY5 automated dosimetric assessment system. It is made by Schmid & Partner Engineering AG (SPEAG) in Zurich, Switzerland. It consists of high precision robotics system (Stäubli), robot controller, Intel Core2 computer, near-field probe, probe alignment sensor. The robot is a six-axis industrial robot performing precise movements. Cell controller systems contain the power supply, robot controller, teach pendant (Joystick) and remote control, and are used to drive the robot motors. The Stäubli Robot is connected to the cell controller to allow software manipulation of the robot. A data acquisition electronic (DAE) circuit performs the signal amplification; signal multiplexing, AD-conversion, offset measurements, mechanical surface detection, collision detection, etc. is connected to the Electro-optical coupler (EOC). The EOC performs the conversion from the optical into digital electric signal of the DAE and transfers data to the PC plug-in card.

This report shall not be reproduced except in full, without the written approval of TA Technology (Shanghai) Co., Ltd.

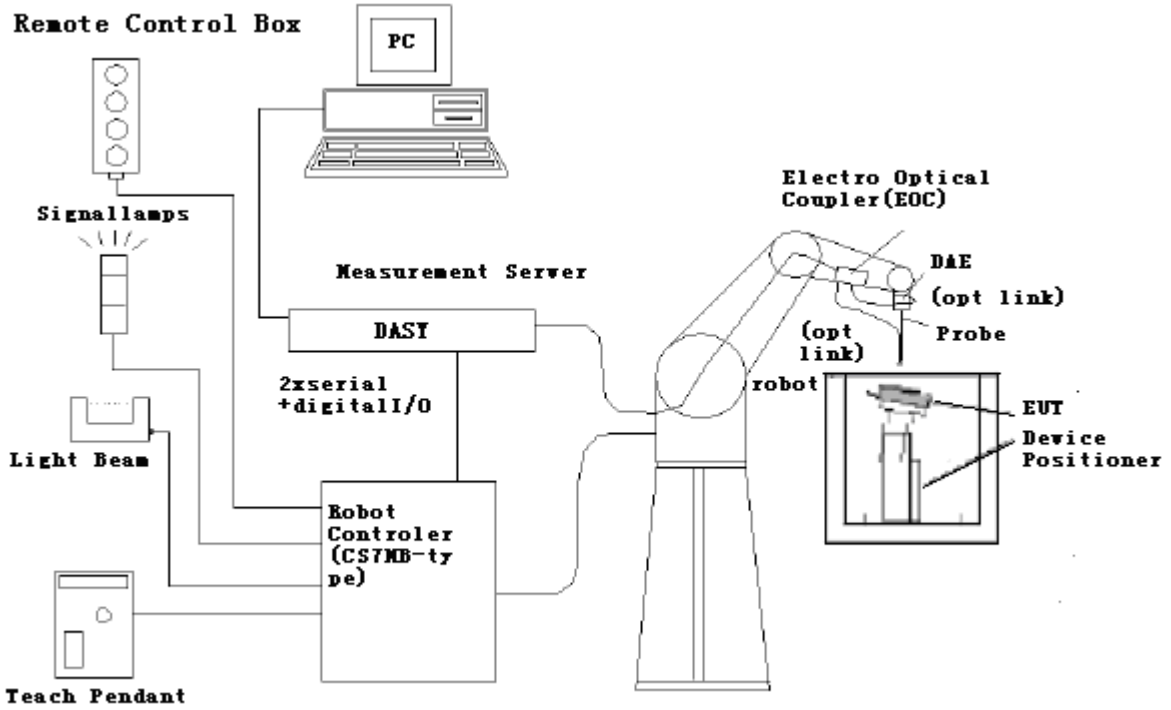

Figure 1 HAC Test Measurement Set-up

The DAE4 consists of a highly sensitive electrometer-grade preamplifier with auto-zeroing, a channel and gain-switching multiplexer, a fast 16 bit AD-converter and a command decoder and control logic unit. Transmission to the PC-card is accomplished through an optical downlink for data and status information and an optical uplink for commands and clock lines. The mechanical probe mounting device includes two different sensor systems for frontal and sidewise probe contacts. They are also used for mechanical surface detection and probe collision detection. The robot uses its own controller with a built in VME-bus computer.

5.2.2 Probe System

The HAC measurements were conducted with the E-Field Probe ER3DV6 and the H-Field Probe H3DV6 (manufactured by SPEAG), designed in the classical triangular configuration and optimized for dosimetric evaluation.

E-Field Probe Description

Construction	One dipole parallel, two dipoles normal to probe axis Built-in shielding against static charges PEEK enclosure material
Calibration	In air from 100 MHz to 3.0 GHz (absolute accuracy ±6.0%, k=2)
Frequency	40 MHz to > 6 GHz (can be extended to < 20 MHz) Linearity: ± 0.2 dB (100 MHz to 3 GHz)

Figure 2 ER3DV6 E-field

This report shall not be reproduced except in full, without the written approval of TA Technology (Shanghai) Co., Ltd.

Directivity	± 0.2 dB in air (rotation around probe axis) ± 0.4 dB in air (rotation normal to probe axis)	**Probe**
Dynamic Range	2 V/m to > 1000 V/m; Linearity: ± 0.2 dB	
Dimensions	Overall length: 330 mm (Tip: 16 mm) Tip diameter: 8 mm (Body: 12 mm) Distance from probe tip to dipole centers: 2.5 mm	
Application	General near-field measurements up to 6 GHz Field component measurements Fast automatic scanning in phantoms	

5.2.3 Test Arch Phantom & Phone Positioner

The Test Arch phantom should be positioned horizontally on a stable surface. Reference markings on the Phantom allow the complete setup of all predefined phantom positions and measurement grids by manually teaching three points in the robot. It enables easy and well defined positioning of the phone and validation dipoles as well as simple teaching of the robot (Dimensions: 370 x 370 x 370 mm).
The Device reference point is set for the EUT at 6.3 mm, the Grid reference point is on the upper surface at the origin of the coordinates, and the “user point \Height Check 0.5 mm” is 0.5mm above the center, allowing verication of the gap of 0.5mm while the probe is positioned there.

The Phone Positioner supports accurate and reliable positioning of any phone with effect on near field <±0.5 dB.

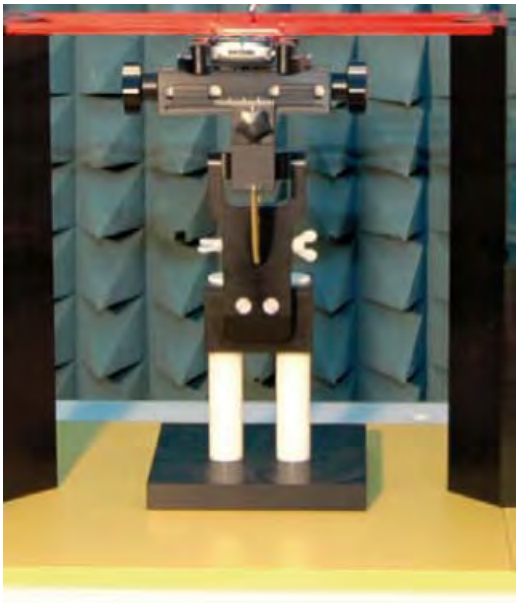

Figure 3 HAC Phantom & Device Holder

This report shall not be reproduced except in full, without the written approval of TA Technology (Shanghai) Co., Ltd.

5.3 RF Test Procedures

The evaluation was performed with the following procedure:

1. Confirm proper operation of the field probe, probe measurement system and other instrumentation and the positioning system.
2. Position the WD in its intended test position. The gauge block can simplify this positioning. Note that a separate E-field gauge block will be needed if the center of the probe sensor elements is at different distances from the tip of the probe.
3. Configure the WD normal operation for maximum rated RF output power, at the desired channel and other operating parameters (e.g., test mode), as intended for the test.
4. The center sub-grid shall center on the center of the axial measurement point or the acoustic output, as appropriate. Locate the field probe at the initial test position in the 50 mm by 50 mm grid, which is contained in the measurement plane. If the field alignment method is used, align the probe for maximum field reception.
5. Record the reading.
6. Scan the entire 50 mm by 50 mm region in equally spaced increments and record the reading at each measurement point. The grid is 5 cm by 5 cm area that is divided into 9 evenly sized blocks or sub-grids.The distance between measurement points shall be sufficient to assure the identification of the maximum reading.
7. Identify the five contiguous sub-grids around the center sub-grid with the lowest maximum field strength readings. Thus the six areas to be used to determine the WD's highest emissions are identified and outlined for the final manual scan. Please note that a maximum of five blocks can be excluded for both E-field measurements for the WD output being measured. Stated another way, the center sub-grid and three others must be common to both the E-field measurements.
8. Identify the maximum field reading within the non-excluded sub-grids identified in Step 7.
9. Convert the maximum field strength reading identified in Step 8 to V/m or A/m, as appropriate. For probes which require a probe modulation factor, this conversion shall be done using the appropriate probe modulation factor and the calibration.
10. Repeat Step 1 through Step 10 for both the E-field measurements.
11. Compare this reading to the categories in ANSI C63.19 Clause 8 and record the resulting category. The lowest category number listed in 8.2, Table 8.3 obtained in Step 10 for either E-field determines the M category for the audio coupling mode assessment. Record the WD category rating.

This report shall not be reproduced except in full, without the written approval of TA Technology (Shanghai) Co., Ltd.

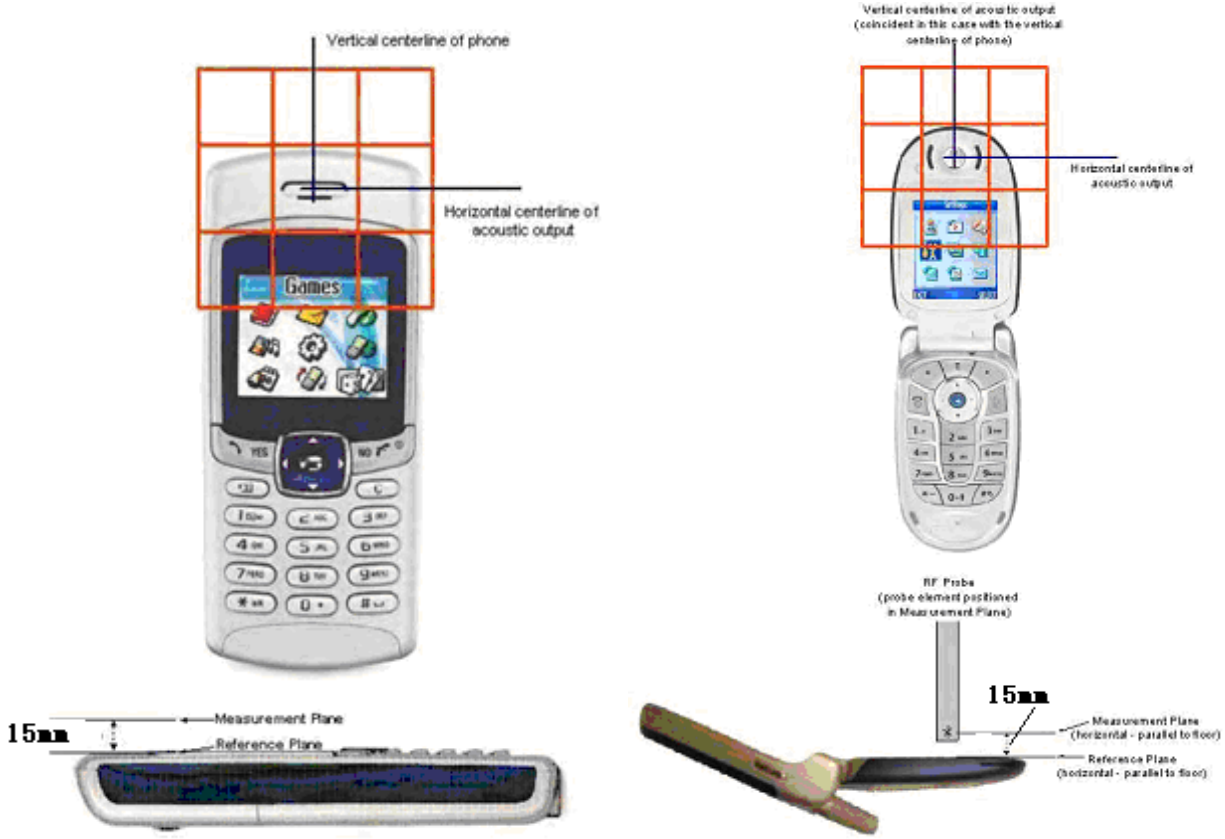

Figure 4 WD reference and plane for RF emission measurements

This report shall not be reproduced except in full, without the written approval of TA Technology (Shanghai) Co., Ltd.

5.4 System Check

Validation Procedure

Place a dipole antenna meeting the requirements given in ANSI C63.19 D.11 in the position normally occupied by the WD. The dipole antenna serves as a known source for an electrical output. Position the E-field probe so that:

The probes and their cables are parallel to the coaxial feed of the dipole antenna.
The probe cables and the coaxial feed of the dipole antenna approach the measurement area from opposite directions.
Position the E-field probe at a 15 mm distance from the center of the probe element to the top surface. Validation was performed to verify that measured E-field is within +/-18% from the target reference values provided by the manufacturer. ”Values within +/-18% are acceptable. Of which 12% is deviation and 13% is measurement uncertainty.”

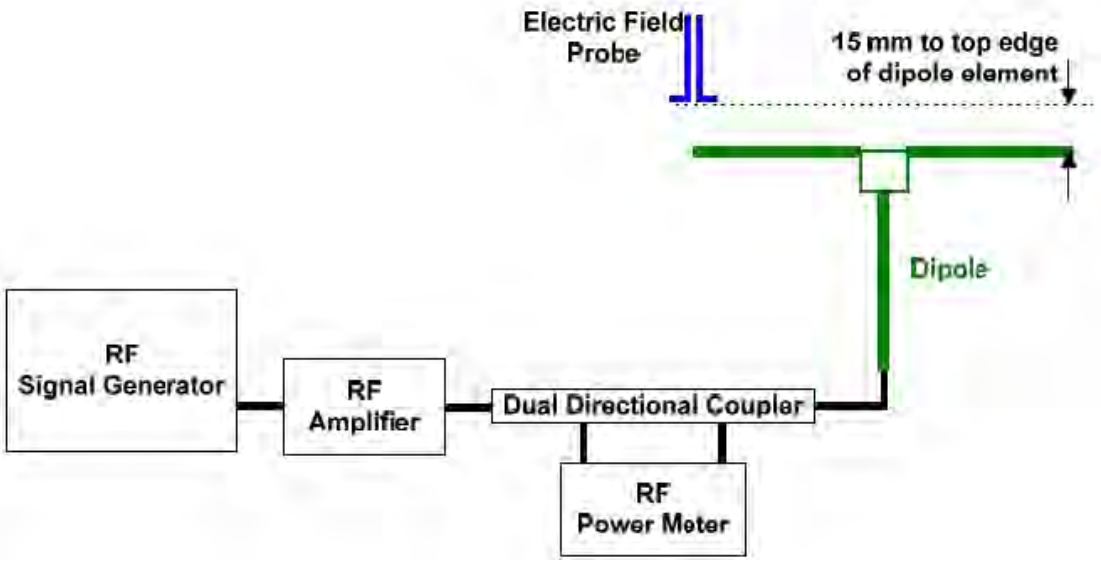

Figure 5 Dipole Validation Setup

Frequency (MHz)	Input Power (mW)	Target[1] Value (V/m)	Measured[2] Value (V/m)	Deviation [3] (%)	Test Date
2600	100	87.3	87.4	0.11	2022/2/28

This report shall not be reproduced except in full, without the written approval of TA Technology (Shanghai) Co., Ltd.

5.5 Modulation Interference Factor

For any specific fixed and repeatable modulated signal, a modulation interference factor (MIF, expressed in dB) may be developed that relates its interference potential to its steady-state rms signal level or average power level. This factor is a function only of the audio-frequency amplitude modulation characteristics of the signal and is the same for field-strength and conducted power measurements. It is important to emphasize that the MIF is valid only for a specific repeatable audio-frequency amplitude modulation characteristic. Any change in modulation characteristic requires determination and application of a new MIF

The MIF may be determined using a radiated RF field or a conducted RF signal,

b) Using RF illumination or conducted coupling, apply the specific modulated signal in question to the measurement system at a level within its confirmed operating dynamic range.

c) Measure the steady-state rms level at the output of the fast probe or sensor.

d) Measure the steady-state average level at the weighting output.

e) Without changing the square-law detector or weighting system, and using RF illumination or conducted coupling, substitute for the specific modulated signal a 1kHz, 80% amplitude modulated carrier at the same frequency and adjust its strength until the level at the weighting output equals the step d) measurement.

f) Without changing the carrier level from step e), remove the 1 kHz modulation and again measure the steady-state ms level indicated at the output of the fast probe or sensor.

g) The MIF for the specific modulation characteristic is provided by the ratio of the step f) measurement to the step c) measurement, expressed in dB (20 x log(step f)/step c)).

Based on the KDB285076 D01v05, the handset can also use the MIF values predetermined by the test equipment manufacturer, and the following table lists the MIF values evaluated by DASY manufacturer (SPEAG), and the test result will be calculated with the MIF parameter automatically.

SPEAG UID	UID version	Communication system	MIF(dB)
10011	CAB	UMTS-FDD (WCDMA)	-27.23
10169	CAE	LTE-FDD (SC-FDMA, 1 RB, 20 MHz, QPSK)	-15.63
10175	CAG	LTE-FDD (SC-FDMA, 1 RB, 10 MHz, QPSK)	-15.63
10172	CAG	LTE-TDD (SC-FDMA, 1RB,20MHz,QPSK)	-1.62
10012	CAB	IEEE 802.11b WiFi 2.4 GHz (DSSS, 1 Mbps)	-5.90
10013	CAB	IEEE 802.11g WiFi 2.4 GHz (DSSS-OFDM, 6 Mbps)	-3.16
10591	AAB	IEEE 802.11n (HT Mixed, 20MHz, MCS0, 90pc duty cycle)	-5.59
10069	CAC	IEEE 802.11a/h WiFi 5 GHz (OFDM, 54 Mbps)	-3.15
10525	AAB	IEEE 802.11ac WiFi (20MHz, MCS0, 99pc duty cycle)	-12.23

This report shall not be reproduced except in full, without the written approval of TA Technology (Shanghai) Co., Ltd.

5.6 Justification of Held to Ear Modes Tested

5.6.1 Analysis of RF Air Interface Technologies

a. According to the April 2013 TCB workshop slides, LTE and other OTT data services are outside the current definition of a managed CMRS service and are currently not required to be evaluated.
b. No associated T-coil measurements for VoIP over WIFI CMRS have been made in accordance with the guidance issued by OET in KDB publication 285076 D02 T-Coil testing for CMRS IP.
c. An analysis was performed, following the guidance of 4.3 and 4.4 of the ANSI standard, of the RF air interface technologies being evaluated. The factors that will affect the RF interference potential were evaluated, and the worst case operating modes were identified and used in the evaluation. A WD's interference potential is a function both of the WD's average near-field field strength and of the signal's audio-frequency amplitude modulation characteristics. Per 4.4, RF air interface technologies that have low power have been found to produce sufficiently low RF interference potential, So it is possible to exempt them from the product testing specified in Clause 5 of the ANSI standard. An RF air interface technology of a device is exempt from testing when its average antenna input power plus its MIF is <17dBm for all of its operating modes. RF air interface technologies exempted from testing in this manner are automatically assigned an M4 rating to be used in determining the overall rating for the WD.
The worst case MIF plus the worst case average antenna input power for all modes are investigated below to determine the testing requirements for this device.

5.6.2 Average Antenna Input Power & Evaluation for Low-power Exemption

An RF air interface technology of a device is exempt from testing when its average antenna input power plus its **MIF is ≤17 dBm** for any of its operating modes. If a device supports multiple RF air interfaces, each RF air interface shall be evaluated individually.

Band	Maximum Average Antenna Input Power (dBm)	Worst Case MIF (dB)	Maximum Average Antenna Input Power + MIF (dBm)	Low power exemption
WCDMA Band II	24.50	-27.23	-2.73	Yes
WCDMA Band IV	24.50	-27.23	-2.73	Yes
WCDMA Band V	25.00	-27.23	-2.23	Yes
LTE FDD 2	24.00	-15.63	8.37	Yes
LTE FDD 4	24.00	-15.63	8.37	Yes
LTE FDD 5	24.50	-15.63	8.87	Yes
LTE FDD 12	24.50	-15.63	8.87	Yes
LTE TDD 41	24.50	-1.62	22.88	No
LTE FDD 66	24.00	-15.63	8.37	Yes
LTE FDD 71	24.50	-15.63	8.87	Yes
802.11b	19.00	-5.90	13.10	Yes
802.11g	16.00	-3.16	12.84	Yes

This report shall not be reproduced except in full, without the written approval of TA Technology (Shanghai) Co., Ltd.

802.11n	16.00	-5.59	10.41	Yes
802.11a	16.50	-3.15	13.35	Yes
802.11ac	12.50	-12.23	0.27	Yes
Note: 1. MIF values applied in this test report were provided by the HAC equipment provider, SPEAG.				

This report shall not be reproduced except in full, without the written approval of TA Technology (Shanghai) Co., Ltd.

6 Test Results

6.1 ANSI C63.19-2011 Limits

Category	Telephone RF parameters < 960 MHz	Telephone RF parameters > 960 MHz
Near field	**E-field emissions**	
Category M1	50 to 55 dB (V/m)	40 to 45 dB (V/m)
Category M2	45 to 50 dB (V/m)	35 to 40 dB (V/m)
Category M3	40 to 45 dB (V/m)	30 to 35 dB (V/m)
Category M4	< 40 dB (V/m)	< 30 dB (V/m)

This report shall not be reproduced except in full, without the written approval of TA Technology (Shanghai) Co., Ltd.

6.2 Summary Test Results

Band	Channel /Frenqucy (MHz)	MIF (dB)	E-field (dBV/m)	Power Drift (dB)	Category	Graph Results
LTE TDD 41	39750/2506	-1.62	21.97	-0.02	M4	1
	40620/2593	-1.62	21.14	-0.29	M4	2
	41490/2680	-1.62	22.76	-0.08	M4	3

This report shall not be reproduced except in full, without the written approval of TA Technology (Shanghai) Co., Ltd.

7 Measurement Uncertainty

Measurement uncertainty evaluation template for DUT HAC RF test

Error source	Type	Uncertainty Value (± %)	Prob. Dist.	k	c_i/E	c_i\H	Standard Uncertainty ui (± %) E	Degree of freedom Veff or vi
Measurement system								
Probe Calibration	B	5.1	N	1	1	1	5.1	∞
Axial Isotropy	B	4.7	R	1.732	1	1	2.7	∞
Sensor Displacement	B	16.5	R	1.732	1	0.145	9.5	∞
Boundary Effects	B	2.4	R	1.732	1	1	1.4	∞
Test Arch	B	7.2	R	1.732	1	0	4.2	∞
Linearity	B	4.7	R	1.732	1	1	2.7	∞
Scaling to Peak Envelope Power	B	2.0	R	1.732	1	1	1.2	∞
System Detection Limit	B	1.0	R	1.732	1	1	0.6	∞
Readout Electronics	B	0.3	N	1	1	1	0.3	∞
Response Time	B	0.8	R	1.732	1	1	0.5	∞
Integration Time	B	2.6	R	1.732	1	1	1.5	∞
RF Ambient Conditions	B	3.0	R	1.732	1	1	1.7	∞
RF Reflections	B	12.0	R	1.732	1	1	6.9	∞
Probe Positioner	B	1.2	R	1.732	1	0.67	0.7	∞
Probe Positioning	A	4.7	R	1.732	1	0.67	2.7	∞
Extra. And Interpolation	B	1.0	R	1.732	1	1	0.6	∞
Test sample related								
Device Positioning Vertical	B	4.7	R	1.732	1	0.67	2.7	∞
Device Positioning Lateral	B	1.0	R	1.732	1	1	0.6	∞
Device Holder and Phantom	B	2.4	R	1.732	1	1	1.4	∞
Power Drift	B	5.0	R	1.732	1	1	2.9	∞
Phantom and Setup related								
Phantom Thickness	B	2.4	R	1.732	1	0.67	1.4	∞
Combined standard uncertainty (%)							15.3	
Expanded Std. uncertainty on power (K=2)							30.6	
Expanded Std. uncertainty on field (K=2)							15.3	

This report shall not be reproduced except in full, without the written approval of TA Technology (Shanghai) Co., Ltd.

8 Main Test Instruments

Name	Manufacturer	Type	Serial Number	Calibration Date	Expiration Time
Power meter	Agilent	E4417A	GB41291714	2021-05-15	2022-05-14
Power sensor	Agilent	N8481H	MY50350004	2021-05-15	2022-05-14
Signal Generator	Agilent	N5181A	MY50140143	2021-05-15	2022-05-14
Amplifier	INDEXSAR	IXA-020	0401	2021-05-15	2022-05-14
Wideband radio communication tester	R&S	CMW500	146734	2021-05-15	2022-05-14
E-Field Probe	SPEAG	EF3DV3	4048	2021-03-04	2022-03-03
DAE	SPEAG	DAE4	1648	2021-05-17	2022-05-16
Validation Kit 2600MHz	SPEAG	CD2600V3	1016	2021-01-18	2024-01-17
Hygrothermograph	Anymetr	NT-311	20150731	2021-05-18	2022-05-17
HAC Phantom	SPEAG	SD HAC P01 BB	1117	/	/
Software for Test	Speag	DASY5	/	/	/
Software for Tissue	Agilent	85070	/	/	/

*******END OF REPORT *******

This report shall not be reproduced except in full, without the written approval of TA Technology (Shanghai) Co., Ltd.

ANNEX A: System Check Results

HAC_System Performance Check at 2600MHz_E

DUT: Dipole 2600 MHz; Type: CD2600V3; SN: 1016

Date: 2022/2/28

Communication System: CW; Frequency: 2600 MHz;Duty Cycle: 1:1

Ambient Temperature:22.3 ℃

Phantom section: RF Section

DASY5 Configuration:

Sensor-Surface: 0mm (Mechanical Surface Detection)

Probe: EF3DV3 - SN4048; ConvF(1, 1, 1); Calibrated: 2021/3/4

Electronics: DAE4 Sn1648; Calibrated: 2021/5/17

Phantom: HAC Test Arch with AMCC; Type: SD HAC P01 BA

Measurement SW: DASY52, Version 52.10 (4); SEMCAD X Version 14.6.14 (7483)

E Scan - measurement distance from the probe sensor center to CD2600 Dipole = 15mm/Hearing Aid Compatibility Test (41x181x1): Measurement grid: dx=0.5000 mm, dy=0.5000 mm

Maximum value of peak Total field = 87.40 V/m

Applied MIF = 0.00 dB

Device Reference Point: 0, 0, -6.3 mm

Reference Value = 71.52V/m; Power Drift = 0.01 dB

Hearing Aid Near-Field Category: M2 (AWF 0 dB)

Peak E-field in V/m

Grid 1 **83.35 M2**	Grid 2 **86.32 M2**	Grid 3 **85.70M2**
Grid 4 **79.62 M3**	Grid 5 **81.46 M3**	Grid 6 **81.15 M3**
Grid 7 **84.28 M2**	Grid 8 **87.40 M2**	Grid 9 **86.59 M2**

This report shall not be reproduced except in full, without the written approval of TA Technology (Shanghai) Co., Ltd.

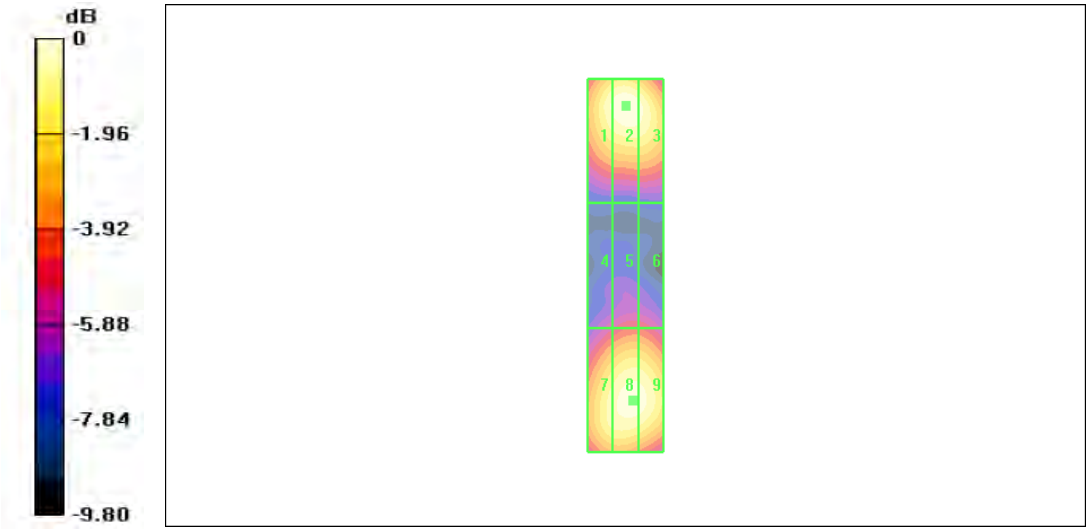

This report shall not be reproduced except in full, without the written approval of TA Technology (Shanghai) Co., Ltd.

ANNEX B: Graph Results

Plot 1 HAC RF E-Field LTE B41 Low

Date: 2022/2/28

Communication System: UID 10172 - CAG, LTE-TDD (SC-FDMA, 1 RB, 20 MHz, QPSK); Frequency: 2506 MHz;Duty Cycle: 1:8.33

Medium parameters used: σ = 0 S/m, ε_r = 1; ρ = 1000 kg/m^3

Ambient Temperature:22.3 ℃ Liquid Temperature: 21.5℃

Phantom section: RF Section

DASY5 Configuration:

Sensor-Surface: 0mm (Mechanical Surface Detection)

Probe: EF3DV3 - SN4048; ConvF(1, 1, 1); Calibrated: 2021/3/4

Electronics: DAE4 Sn1648; Calibrated: 2021/5/17

Phantom: HAC Test Arch with AMCC; Type: SD HAC P01 BA

Measurement SW: DASY52, Version 52.10 (4); SEMCAD X Version 14.6.14 (7483)

LTE B41 HAC RF E-Field/E Scan - ER3D: 15 mm from Probe Center to the Device Low/Hearing Aid Compatibility Test (101x101x1): Interpolated grid: dx=0.5000 mm, dy=0.5000 mm

Device Reference Point: 0, 0, -6.3 mm

Reference Value = 17.91 V/m; Power Drift = -0.02 dB

Applied MIF = -1.62 dB

RF audio interference level = 21.97 dBV/m

Emission category: M4

MIF scaled E-field

Grid 1 **M4** **25.03 dBV/m**	Grid 2 **M4** **22.7 dBV/m**	Grid 3 **M4** **22.12 dBV/m**
Grid 4 **M4** **21.97 dBV/m**	Grid 5 **M4** **21.22 dBV/m**	Grid 6 **M4** **20.93 dBV/m**
Grid 7 **M4** **21.28 dBV/m**	Grid 8 **M4** **21.09 dBV/m**	Grid 9 **M4** **20.96 dBV/m**

Cursor:

Total = 25.03 dBV/m

E Category: M4

Location: 25, -25, 8.7 mm

This report shall not be reproduced except in full, without the written approval of TA Technology (Shanghai) Co., Ltd.

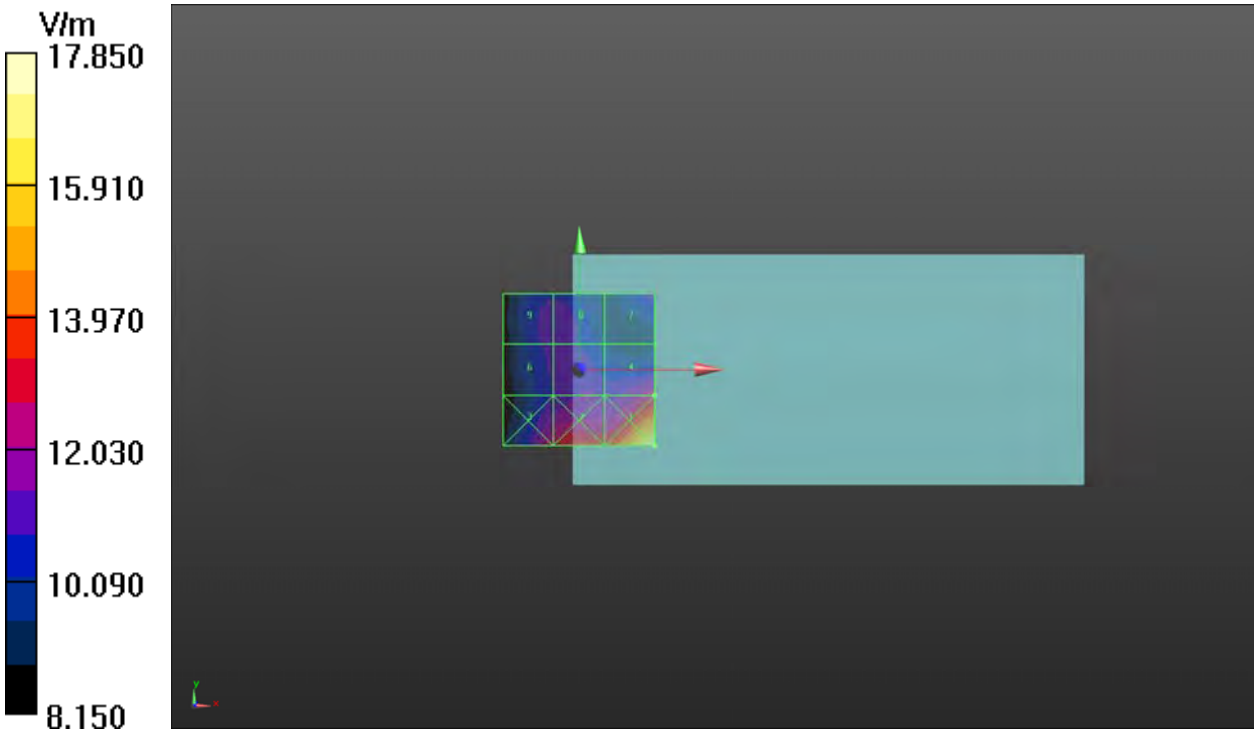

This report shall not be reproduced except in full, without the written approval of TA Technology (Shanghai) Co., Ltd.

Plot 2 HAC RF E-Field LTE B41 Middle

Date: 2022/2/28

Communication System: UID 10172 - CAG, LTE-TDD (SC-FDMA, 1 RB, 20 MHz, QPSK); Frequency: 2593 MHz;Duty Cycle: 1:8.33

Medium parameters used: σ = 0 S/m, ε_r = 1; ρ = 1000 kg/m^3

Ambient Temperature:22.3 ℃ Liquid Temperature: 21.5℃

Phantom section: RF Section

DASY5 Configuration:

Sensor-Surface: 0mm (Mechanical Surface Detection)

Probe: EF3DV3 - SN4048; ConvF(1, 1, 1); Calibrated: 2021/3/4

Electronics: DAE4 Sn1648; Calibrated: 2021/5/17

Phantom: HAC Test Arch with AMCC; Type: SD HAC P01 BA

Measurement SW: DASY52, Version 52.10 (4); SEMCAD X Version 14.6.14 (7483)

LTE B41 HAC RF E-Field/E Scan - ER3D: 15 mm from Probe Center to the Device Middle/Hearing Aid Compatibility Test (101x101x1): Interpolated grid: dx=0.5000 mm, dy=0.5000 mm

Device Reference Point: 0, 0, -6.3 mm

Reference Value = 17.25 V/m; Power Drift = -0.29 dB

Applied MIF = -1.62 dB

RF audio interference level = 21.14 dBV/m

Emission category: M4

MIF scaled E-field

Grid 1 **M4** **25.11 dBV/m**	Grid 2 **M4** **22.4 dBV/m**	Grid 3 **M4** **20.47 dBV/m**
Grid 4 **M4** **22.24 dBV/m**	Grid 5 **M4** **21.14 dBV/m**	Grid 6 **M4** **19.79 dBV/m**
Grid 7 **M4** **20.36 dBV/m**	Grid 8 **M4** **20.87 dBV/m**	Grid 9 **M4** **20.2 dBV/m**

Cursor:

Total = 25.11 dBV/m

E Category: M4

Location: 25, -25, 8.7 mm

This report shall not be reproduced except in full, without the written approval of TA Technology (Shanghai) Co., Ltd.

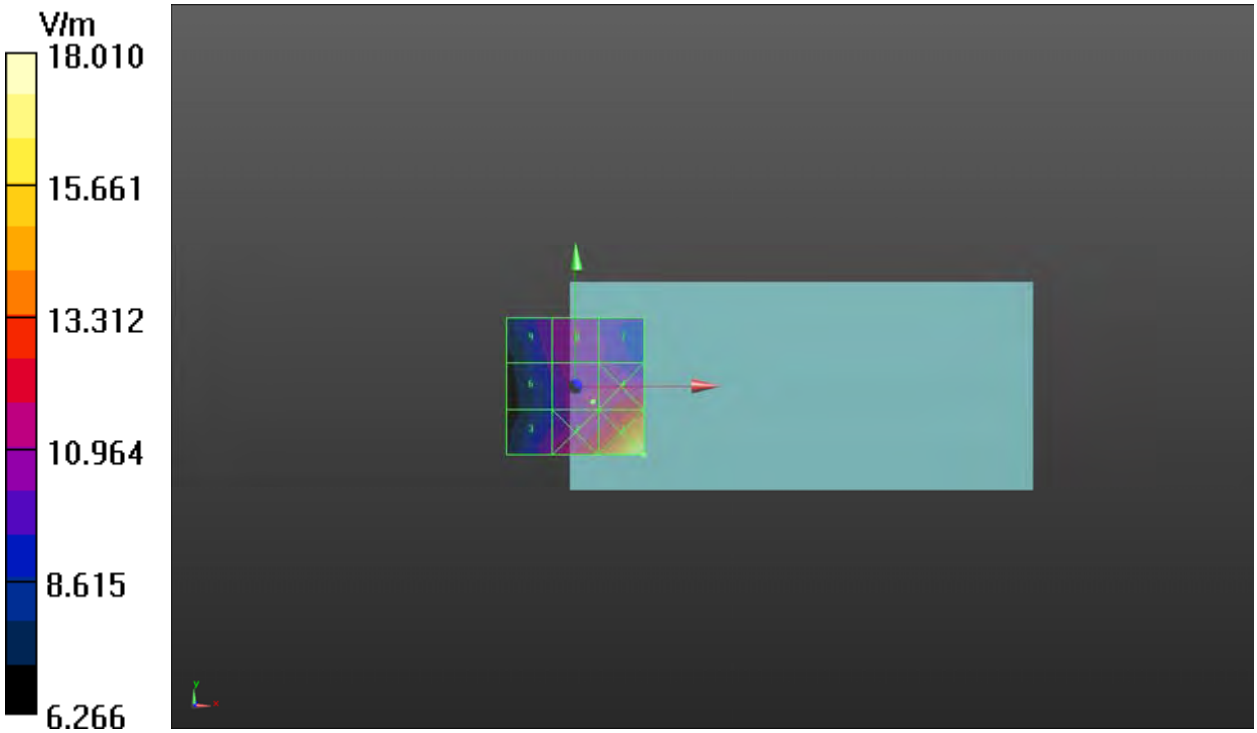

This report shall not be reproduced except in full, without the written approval of TA Technology (Shanghai) Co., Ltd.

Plot 3 HAC RF E-Field LTE B41 High

Date: 2022/2/28

Communication System: UID 10172 - CAG, LTE-TDD (SC-FDMA, 1 RB, 20 MHz, QPSK); Frequency: 2506 MHz;Duty Cycle: 1:8.33

Medium parameters used: σ = 0 S/m, ε_r = 1; ρ = 1000 kg/m^3

Ambient Temperature:22.3 ℃ Liquid Temperature: 21.5℃

Phantom section: RF Section

DASY5 Configuration:

Sensor-Surface: 0mm (Mechanical Surface Detection)

Probe: EF3DV3 - SN4048; ConvF(1, 1, 1); Calibrated: 2021/3/4

Electronics: DAE4 Sn1648; Calibrated: 2021/5/17

Phantom: HAC Test Arch with AMCC; Type: SD HAC P01 BA

Measurement SW: DASY52, Version 52.10 (4); SEMCAD X Version 14.6.14 (7483)

LTE B41 HAC RF E-Field/E Scan - ER3D: 15 mm from Probe Center to the Device High/Hearing Aid Compatibility Test (101x101x1): Interpolated grid: dx=0.5000 mm, dy=0.5000 mm

Device Reference Point: 0, 0, -6.3 mm

Reference Value = 17.91 V/m; Power Drift = -0.08 dB

Applied MIF = -1.62 dB

RF audio interference level = 22.76 dBV/m

Emission category: M4

MIF scaled E-field

Grid 1 **M4** **25.03 dBV/m**	Grid 2 **M4** **22.7 dBV/m**	Grid 3 **M4** **22.12 dBV/m**
Grid 4 **M4** **21.97 dBV/m**	Grid 5 **M4** **21.22 dBV/m**	Grid 6 **M4** **20.93 dBV/m**
Grid 7 **M4** **21.28 dBV/m**	Grid 8 **M4** **21.09 dBV/m**	Grid 9 **M4** **20.96 dBV/m**

Cursor:

Total = 25.03 dBV/m

E Category: M4

Location: 25, -25, 8.7 mm

This report shall not be reproduced except in full, without the written approval of TA Technology (Shanghai) Co., Ltd.

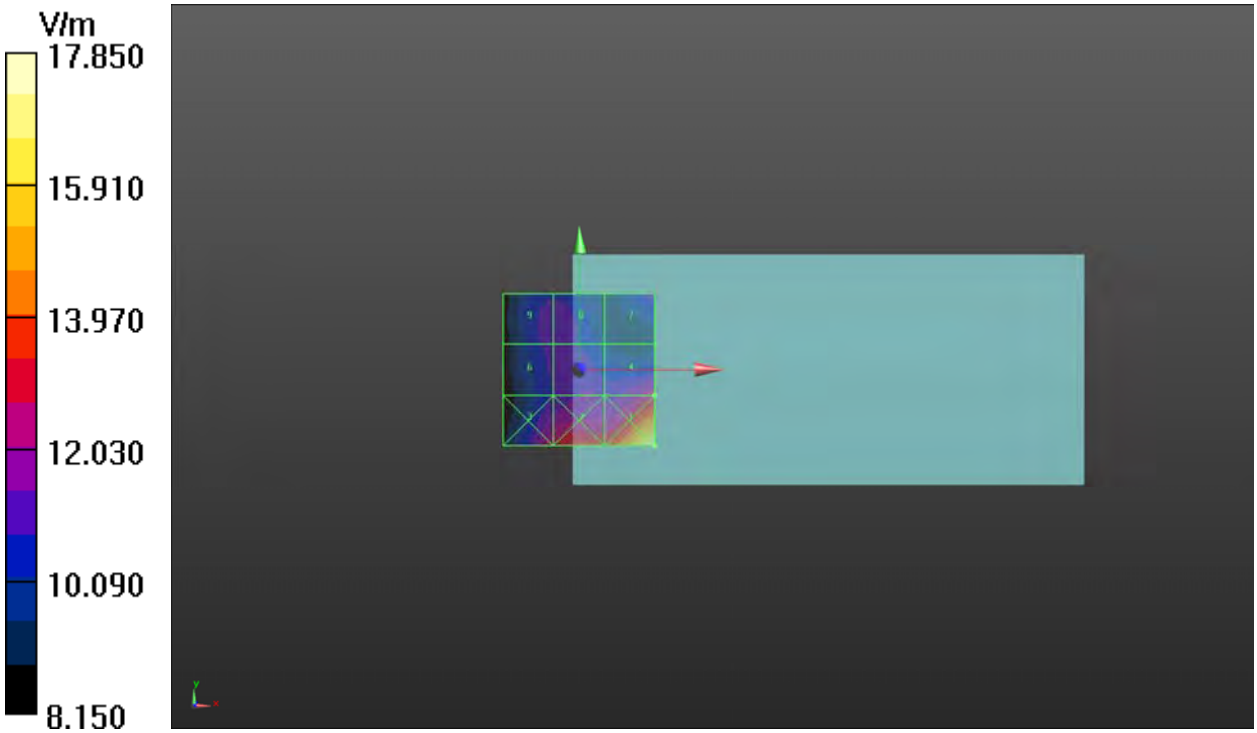

This report shall not be reproduced except in full, without the written approval of TA Technology (Shanghai) Co., Ltd.

ANNEX C: E-Probe Calibration Certificate

Calibration Laboratory of
Schmid & Partner
Engineering AG
Zeughausstrasse 43, 8004 Zurich, Switzerland

S Schweizerischer Kalibrierdienst
C Service suisse d'étalonnage
S Servizio svizzero di taratura
Swiss Calibration Service

Accredited by the Swiss Accreditation Service (SAS)
The Swiss Accreditation Service is one of the signatories to the EA Multilateral Agreement for the recognition of calibration certificates

Accreditation No.: SCS 0108

Client TA-SH (Auden)

Certificate No: EF3-4048_Mar21

CALIBRATION CERTIFICATE

Object	EF3DV3- SN:4048
Calibration procedure(s)	QA CAL-02.v9, QA CAL-25.v7 Calibration procedure for E-field probes optimized for close near field evaluations in air
Calibration date:	March 4, 2021

This calibration certificate documents the traceability to national standards, which realize the physical units of measurements (SI).
The measurements and the uncertainties with confidence probability are given on the following pages and are part of the certificate.

All calibrations have been conducted in the closed laboratory facility: environment temperature (22 ± 3)°C and humidity < 70%.

Calibration Equipment used (M&TE critical for calibration)

Primary Standards	ID	Cal Date (Certificate No.)	Scheduled Calibration
Power meter NRP	SN: 104778	01-Apr-20 (No. 217-03100/03101)	Apr-21
Power sensor NRP-Z91	SN: 103244	01-Apr-20 (No. 217-03100)	Apr-21
Power sensor NRP-Z91	SN: 103245	01-Apr-20 (No. 217-03101)	Apr-21
Reference 20 dB Attenuator	SN: CC2552 (20x)	31-Mar-20 (No. 217-03106)	Apr-21
DAE4	SN: 789	23-Dec-20 (No. DAE4-789_Dec20)	Dec-21
Reference Probe ER3DV6	SN: 2328	05-Oct-20 (No. ER3-2328_Oct20)	Oct-21
Secondary Standards	**ID**	**Check Date (in house)**	**Scheduled Check**
Power meter E4419B	SN: GB41293874	06-Apr-16 (in house check Jun-20)	In house check: Jun-22
Power sensor E4412A	SN: MY41498087	06-Apr-16 (in house check Jun-20)	In house check: Jun-22
Power sensor E4412A	SN: 000110210	06-Apr-16 (in house check Jun-20)	In house check: Jun-22
RF generator HP 8648C	SN: US3642U01700	04-Aug-99 (in house check Jun-20)	In house check: Jun-22
Network Analyzer E8358A	SN: US41080477	31-Mar-14 (in house check Oct-20)	In house check: Oct-21

	Name	Function	Signature
Calibrated by:	Michael Weber	Laboratory Technician	
Approved by:	Katja Pokovic	Technical Manager	

Issued: March 4, 2021

This calibration certificate shall not be reproduced except in full without written approval of the laboratory.

Certificate No: EF3-4048_Mar21 Page 1 of 22

This report shall not be reproduced except in full, without the written approval of TA Technology (Shanghai) Co., Ltd.

Calibration Laboratory of
Schmid & Partner
Engineering AG
Zeughausstrasse 43, 8004 Zurich, Switzerland

S Schweizerischer Kalibrierdienst
C Service suisse d'étalonnage
S Servizio svizzero di taratura
Swiss Calibration Service

Accreditation No.: **SCS 0108**

Accredited by the Swiss Accreditation Service (SAS)
The Swiss Accreditation Service is one of the signatories to the EA Multilateral Agreement for the recognition of calibration certificates

Glossary:

NORMx,y,z	sensitivity in free space
DCP	diode compression point
CF	crest factor (1/duty_cycle) of the RF signal
A, B, C, D	modulation dependent linearization parameters
En	incident E-field orientation normal to probe axis
Ep	incident E-field orientation parallel to probe axis
Polarization φ	φ rotation around probe axis
Polarization ϑ	ϑ rotation around an axis that is in the plane normal to probe axis (at measurement center), i.e., ϑ = 0 is normal to probe axis
Connector Angle	information used in DASY system to align probe sensor X to the robot coordinate system

Calibration is Performed According to the Following Standards:

a) IEEE Std 1309-2005, " IEEE Standard for calibration of electromagnetic field sensors and probes, excluding antennas, from 9 kHz to 40 GHz", December 2005
b) CTIA Test Plan for Hearing Aid Compatibility, Rev 3.1.1, May 2017

Methods Applied and Interpretation of Parameters:

- *NORMx,y,z:* Assessed for E-field polarization ϑ = 0 for XY sensors and ϑ = 90 for Z sensor (f ≤ 900 MHz in TEM-cell; f > 1800 MHz: R22 waveguide).
- *NORM(f)x,y,z = NORMx,y,z * frequency_response* (see Frequency Response Chart).
- *DCPx,y,z:* DCP are numerical linearization parameters assessed based on the data of power sweep with CW signal (no uncertainty required). DCP does not depend on frequency nor media.
- *PAR:* PAR is the Peak to Average Ratio that is not calibrated but determined based on the signal characteristics
- *Ax,y,z; Bx,y,z; Cx,y,z; Dx,y,z; VRx,y,z: A, B, C, D* are numerical linearization parameters assessed based on the data of power sweep for specific modulation signal. The parameters do not depend on frequency nor media. *VR* is the maximum calibration range expressed in RMS voltage across the diode.
- *Spherical isotropy (3D deviation from isotropy)*: in a locally homogeneous field realized using an open waveguide setup.
- *Sensor Offset*: The sensor offset corresponds to the offset of virtual measurement center from the probe tip (on probe axis). No tolerance required.
- *Connector Angle*: The angle is assessed using the information gained by determining the *NORMx* (no uncertainty required).

This report shall not be reproduced except in full, without the written approval of TA Technology (Shanghai) Co., Ltd.

EF3DV3 – SN:4048 March 4, 2021

DASY/EASY - Parameters of Probe: EF3DV3 - SN:4048

Basic Calibration Parameters

	Sensor X	Sensor Y	Sensor Z	Unc (k=2)
Norm (μV/(V/m)²)	0.61	0.60	1.13	± 10.1 %
DCP (mV)[B]	100.4	101.0	96.1	

Calibration results for Frequency Response (30 MHz – 6 GHz)

Frequency MHz	Target E-Field V/m	Measured E-field (En) V/m	Deviation E-normal in %	Measured E-field (Ep) V/m	Deviation E-normal in %	Unc (k=2) %
30	77.1	77.1	0.0%	77.5	0.5%	± 5.1 %
100	77.2	78.3	1.4%	77.9	0.9%	± 5.1 %
450	77.2	78.4	1.6%	77.9	1.0%	± 5.1 %
600	77.1	77.9	1.1%	77.5	0.5%	± 5.1 %
750	77.0	77.7	0.9%	77.3	0.3%	± 5.1 %
1800	143.1	139.2	-2.7%	139.3	-2.7%	± 5.1 %
2000	135.1	131.5	-2.7%	131.5	-2.7%	± 5.1 %
2200	127.6	123.4	-3.3%	124.5	-2.5%	± 5.1 %
2500	125.5	122.4	-2.5%	123.4	-1.6%	± 5.1 %
3000	79.3	75.6	-4.8%	76.7	-3.4%	± 5.1 %
3500	257.0	246.8	-4.0%	245.3	-4.5%	± 5.1 %
3700	249.2	238.9	-4.1%	238.7	-4.2%	± 5.1 %
5200	50.8	51.4	1.3%	51.6	1.7%	± 5.1 %
5500	46.9	46.7	-0.4%	48.2	2.7%	± 5.1 %
5800	48.9	48.6	-0.6%	47.1	-3.8%	± 5.1 %

The reported uncertainty of measurement is stated as the standard uncertainty of measurement multiplied by the coverage factor k=2, which for a normal distribution corresponds to a coverage probability of approximately 95%.

[B] Numerical linearization parameter: uncertainty not required.
[E] Uncertainty is determined using the max. deviation from linear response applying rectangular distribution and is expressed for the square of the field value.

This report shall not be reproduced except in full, without the written approval of TA Technology (Shanghai) Co., Ltd.

EF3DV3 – SN:4048 March 4, 2021

DASY/EASY - Parameters of Probe: EF3DV3 - SN:4048

Calibration Results for Modulation Response

UID	Communication System Name		A dB	B dB√μV	C	D dB	VR mV	Max dev.	Max Unc[E] (k=2)
0	CW	X	0.00	0.00	1.00	0.00	148.7	± 3.5 %	± 4.7 %
		Y	0.00	0.00	1.00		198.8		
		Z	0.00	0.00	1.00		164.9		
10352-AAA	Pulse Waveform (200Hz, 10%)	X	3.28	67.28	10.90	10.00	60.0	± 2.2 %	± 9.6 %
		Y	8.12	79.17	17.49		60.0		
		Z	7.23	77.60	16.41		60.0		
10353-AAA	Pulse Waveform (200Hz, 20%)	X	1.96	65.62	9.13	6.99	80.0	± 0.9 %	± 9.6 %
		Y	18.20	89.54	19.50		80.0		
		Z	20.00	90.33	19.13		80.0		
10354-AAA	Pulse Waveform (200Hz, 40%)	X	1.10	64.95	7.97	3.98	95.0	± 0.8 %	± 9.6 %
		Y	20.00	91.64	18.81		95.0		
		Z	20.00	91.70	18.22		95.0		
10355-AAA	Pulse Waveform (200Hz, 60%)	X	20.00	86.71	13.97	2.22	120.0	± 0.9 %	± 9.6 %
		Y	20.00	95.29	19.36		120.0		
		Z	20.00	94.60	18.33		120.0		
10387-AAA	QPSK Waveform, 1 MHz	X	2.05	70.87	17.55	1.00	150.0	± 1.6 %	± 9.6 %
		Y	2.07	68.57	16.94		150.0		
		Z	1.92	68.52	16.48		150.0		
10388-AAA	QPSK Waveform, 10 MHz	X	2.58	71.18	17.73	0.00	150.0	± 0.9 %	± 9.6 %
		Y	2.76	71.18	17.52		150.0		
		Z	2.61	70.63	17.25		150.0		
10396-AAA	64-QAM Waveform, 100 kHz	X	2.75	72.17	19.95	3.01	150.0	± 0.7 %	± 9.6 %
		Y	3.87	75.12	20.96		150.0		
		Z	2.93	71.68	19.50		150.0		
10399-AAA	64-QAM Waveform, 40 MHz	X	3.60	67.89	16.47	0.00	150.0	± 0.8 %	± 9.6 %
		Y	3.69	67.85	16.39		150.0		
		Z	3.67	67.82	16.37		150.0		
10414-AAA	WLAN CCDF, 64-QAM, 40MHz	X	4.81	65.86	15.86	0.00	150.0	± 1.9 %	± 9.6 %
		Y	5.00	65.70	15.74		150.0		
		Z	4.82	65.38	15.61		150.0		

Note: For details on UID parameters see Appendix

The reported uncertainty of measurement is stated as the standard uncertainty of measurement multiplied by the coverage factor k=2, which for a normal distribution corresponds to a coverage probability of approximately 95%.

[B] Numerical linearization parameter: uncertainty not required.
[E] Uncertainty is determined using the max. deviation from linear response applying rectangular distribution and is expressed for the square of the field value.

Certificate No: EF3-4048_Mar21 Page 4 of 22

This report shall not be reproduced except in full, without the written approval of TA Technology (Shanghai) Co., Ltd.

EF3DV3 – SN:4048 March 4, 2021

DASY/EASY - Parameters of Probe: EF3DV3 - SN:4048

Sensor Frequency Model Parameters

	Sensor X	Sensor Y	Sensor Z
Frequency Corr. (LF)	0.03	0.06	5.84
Frequency Corr. (HF)	2.82	2.82	2.82

Sensor Model Parameters

	C1 fF	C2 fF	α V^{-1}	T1 $ms.V^{-2}$	T2 $ms.V^{-1}$	T3 ms	T4 V^{-2}	T5 V^{-1}	T6
X	43.6	281.72	35.56	6.29	0.39	4.92	1.28	0.00	1.00
Y	66.5	433.14	36.02	14.85	0.88	4.99	1.18	0.31	1.01
Z	52.7	349.97	37.21	9.42	0.62	5.01	1.06	0.17	1.00

Other Probe Parameters

Sensor Arrangement	Rectangular
Connector Angle (°)	156.6
Mechanical Surface Detection Mode	enabled
Optical Surface Detection Mode	disabled
Probe Overall Length	337 mm
Probe Body Diameter	12 mm
Tip Length	25 mm
Tip Diameter	4 mm
Probe Tip to Sensor X Calibration Point	1.5 mm
Probe Tip to Sensor Y Calibration Point	1.5 mm
Probe Tip to Sensor Z Calibration Point	1.5 mm

Certificate No: EF3-4048_Mar21 Page 5 of 22

This report shall not be reproduced except in full, without the written approval of TA Technology (Shanghai) Co., Ltd.

EF3DV3 – SN:4048 March 4, 2021

Receiving Pattern (ϕ), ϑ = 0°

f=600 MHz,TEM,0°

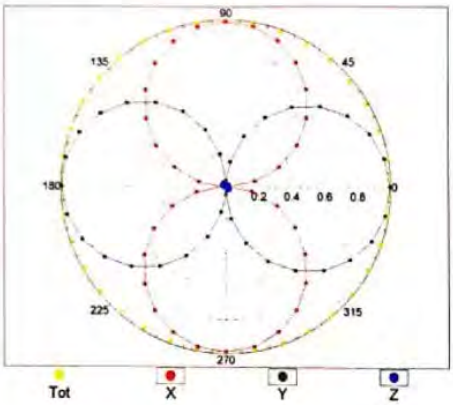

f=1800 MHz,R22,0°

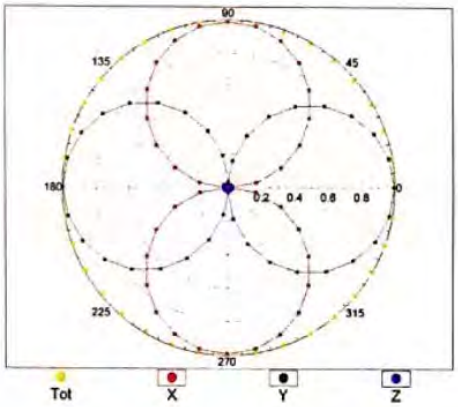

Receiving Pattern (ϕ), ϑ = 90°

f=600 MHz,TEM,90°

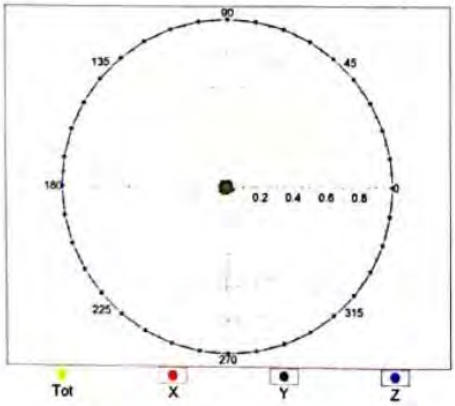

f=1800 MHz,R22,90°

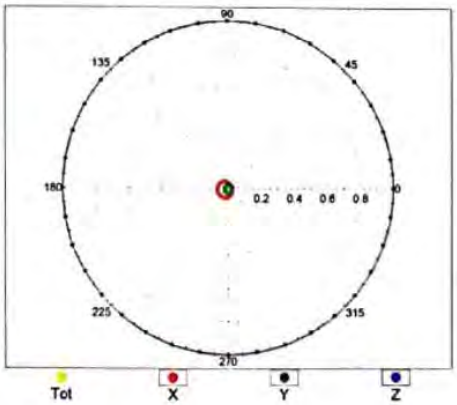

Certificate No: EF3-4048_Mar21 Page 6 of 22

This report shall not be reproduced except in full, without the written approval of TA Technology (Shanghai) Co., Ltd.

EF3DV3 – SN:4048 March 4, 2021

Receiving Pattern (ϕ), ϑ = 0°

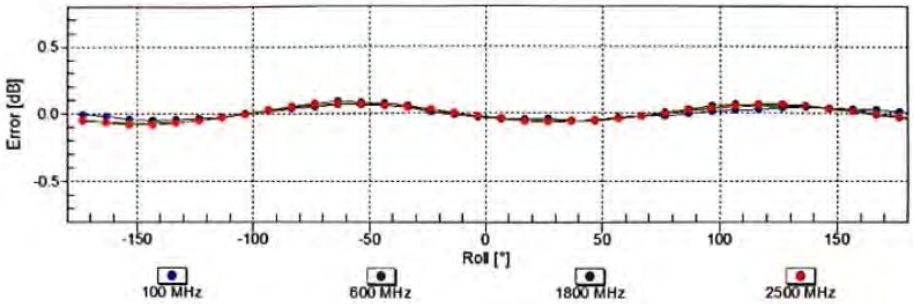

Uncertainty of Axial Isotropy Assessment: ± 0.5% (k=2)

Receiving Pattern (ϕ), ϑ = 90°

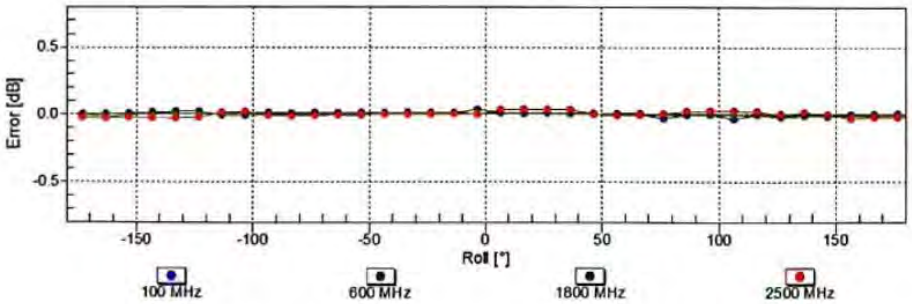

Uncertainty of Axial Isotropy Assessment: ± 0.5% (k=2)

Certificate No: EF3-4048_Mar21 Page 7 of 22

This report shall not be reproduced except in full, without the written approval of TA Technology (Shanghai) Co., Ltd.

EF3DV3 – SN:4048 March 4, 2021

Dynamic Range f(E-field)
(TEM cell, f = 900 MHz)

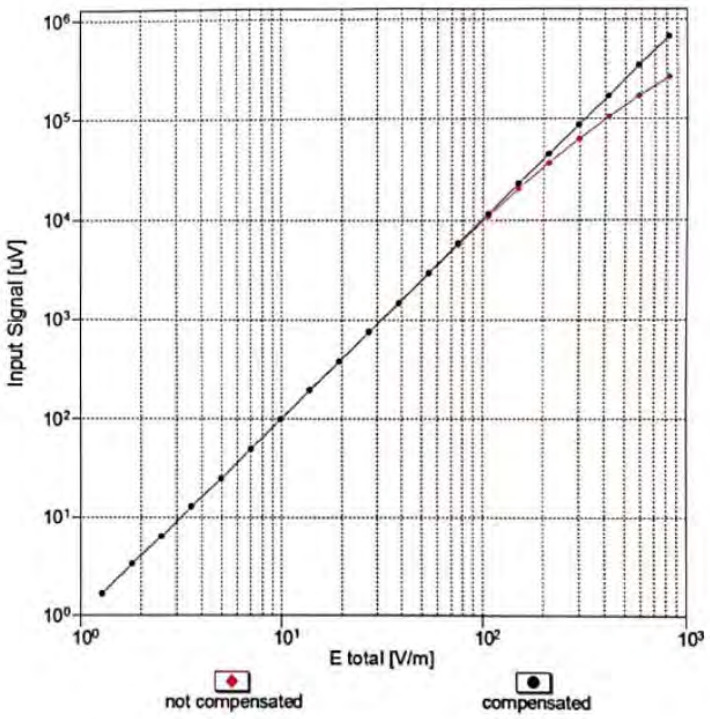

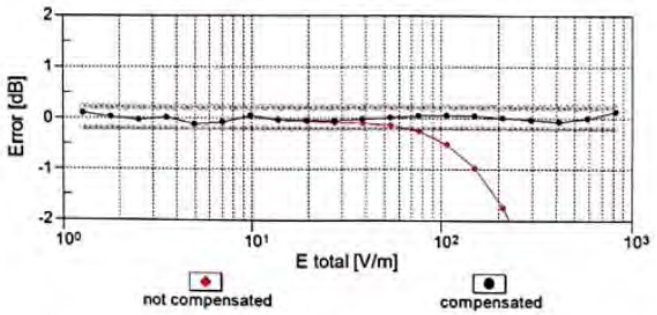

Uncertainty of Linearity Assessment: ± 0.6% (k=2)

Certificate No: EF3-4048_Mar21 Page 8 of 22

This report shall not be reproduced except in full, without the written approval of TA Technology (Shanghai) Co., Ltd.

EF3DV3 – SN:4048

March 4, 2021

Deviation from Isotropy in Air

Error (ϕ, ϑ), f = 900 MHz

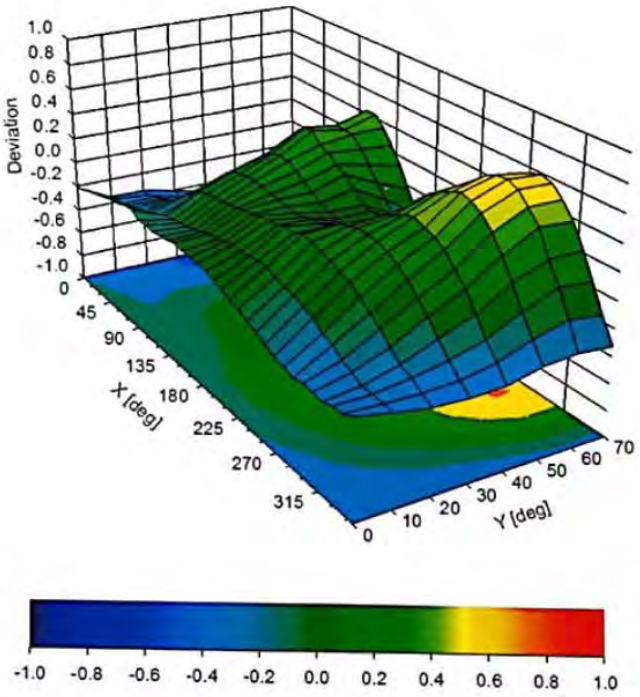

Uncertainty of Spherical Isotropy Assessment: ± 2.6% (k=2)

Certificate No: EF3-4048_Mar21 Page 9 of 22

This report shall not be reproduced except in full, without the written approval of TA Technology (Shanghai) Co., Ltd.

EF3DV3 – SN:4048 March 4, 2021

Appendix: Modulation Calibration Parameters Appendix: Modulation Calibration Parameters

UID	Rev	Communication System Name	Group	PAR (dB)	Unc[E] (k=2)
0		CW	CW	0.00	± 4.7 %
10010	CAA	SAR Validation (Square, 100ms, 10ms)	Test	10.00	± 9.6 %
10011	CAB	UMTS-FDD (WCDMA)	WCDMA	2.91	± 9.6 %
10012	CAB	IEEE 802.11b WiFi 2.4 GHz (DSSS, 1 Mbps)	WLAN	1.87	± 9.6 %
10013	CAB	IEEE 802.11g WiFi 2.4 GHz (DSSS-OFDM, 6 Mbps)	WLAN	9.46	± 9.6 %
10021	DAC	GSM-FDD (TDMA, GMSK)	GSM	9.39	± 9.6 %
10023	DAC	GPRS-FDD (TDMA, GMSK, TN 0)	GSM	9.57	± 9.6 %
10024	DAC	GPRS-FDD (TDMA, GMSK, TN 0-1)	GSM	6.56	± 9.6 %
10025	DAC	EDGE-FDD (TDMA, 8PSK, TN 0)	GSM	12.62	± 9.6 %
10026	DAC	EDGE-FDD (TDMA, 8PSK, TN 0-1)	GSM	9.55	± 9.6 %
10027	DAC	GPRS-FDD (TDMA, GMSK, TN 0-1-2)	GSM	4.80	± 9.6 %
10028	DAC	GPRS-FDD (TDMA, GMSK, TN 0-1-2-3)	GSM	3.55	± 9.6 %
10029	DAC	EDGE-FDD (TDMA, 8PSK, TN 0-1-2)	GSM	7.78	± 9.6 %
10030	CAA	IEEE 802.15.1 Bluetooth (GFSK, DH1)	Bluetooth	5.30	± 9.6 %
10031	CAA	IEEE 802.15.1 Bluetooth (GFSK, DH3)	Bluetooth	1.87	± 9.6 %
10032	CAA	IEEE 802.15.1 Bluetooth (GFSK, DH5)	Bluetooth	1.16	± 9.6 %
10033	CAA	IEEE 802.15.1 Bluetooth (PI/4-DQPSK, DH1)	Bluetooth	7.74	± 9.6 %
10034	CAA	IEEE 802.15.1 Bluetooth (PI/4-DQPSK, DH3)	Bluetooth	4.53	± 9.6 %
10035	CAA	IEEE 802.15.1 Bluetooth (PI/4-DQPSK, DH5)	Bluetooth	3.83	± 9.6 %
10036	CAA	IEEE 802.15.1 Bluetooth (8-DPSK, DH1)	Bluetooth	8.01	± 9.6 %
10037	CAA	IEEE 802.15.1 Bluetooth (8-DPSK, DH3)	Bluetooth	4.77	± 9.6 %
10038	CAA	IEEE 802.15.1 Bluetooth (8-DPSK, DH5)	Bluetooth	4.10	± 9.6 %
10039	CAB	CDMA2000 (1xRTT, RC1)	CDMA2000	4.57	± 9.6 %
10042	CAB	IS-54 / IS-136 FDD (TDMA/FDM, PI/4-DQPSK, Halfrate)	AMPS	7.78	± 9.6 %
10044	CAA	IS-91/EIA/TIA-553 FDD (FDMA, FM)	AMPS	0.00	± 9.6 %
10048	CAA	DECT (TDD, TDMA/FDM, GFSK, Full Slot, 24)	DECT	13.80	± 9.6 %
10049	CAA	DECT (TDD, TDMA/FDM, GFSK, Double Slot, 12)	DECT	10.79	± 9.6 %
10056	CAA	UMTS-TDD (TD-SCDMA, 1.28 Mcps)	TD-SCDMA	11.01	± 9.6 %
10058	DAC	EDGE-FDD (TDMA, 8PSK, TN 0-1-2-3)	GSM	6.52	± 9.6 %
10059	CAB	IEEE 802.11b WiFi 2.4 GHz (DSSS, 2 Mbps)	WLAN	2.12	± 9.6 %
10060	CAB	IEEE 802.11b WiFi 2.4 GHz (DSSS, 5.5 Mbps)	WLAN	2.83	± 9.6 %
10061	CAB	IEEE 802.11b WiFi 2.4 GHz (DSSS, 11 Mbps)	WLAN	3.60	± 9.6 %
10062	CAD	IEEE 802.11a/h WiFi 5 GHz (OFDM, 6 Mbps)	WLAN	8.68	± 9.6 %
10063	CAD	IEEE 802.11a/h WiFi 5 GHz (OFDM, 9 Mbps)	WLAN	8.63	± 9.6 %
10064	CAD	IEEE 802.11a/h WiFi 5 GHz (OFDM, 12 Mbps)	WLAN	9.09	± 9.6 %
10065	CAD	IEEE 802.11a/h WiFi 5 GHz (OFDM, 18 Mbps)	WLAN	9.00	± 9.6 %
10066	CAD	IEEE 802.11a/h WiFi 5 GHz (OFDM, 24 Mbps)	WLAN	9.38	± 9.6 %
10067	CAD	IEEE 802.11a/h WiFi 5 GHz (OFDM, 36 Mbps)	WLAN	10.12	± 9.6 %
10068	CAD	IEEE 802.11a/h WiFi 5 GHz (OFDM, 48 Mbps)	WLAN	10.24	± 9.6 %
10069	CAD	IEEE 802.11a/h WiFi 5 GHz (OFDM, 54 Mbps)	WLAN	10.56	± 9.6 %
10071	CAB	IEEE 802.11g WiFi 2.4 GHz (DSSS/OFDM, 9 Mbps)	WLAN	9.83	± 9.6 %
10072	CAB	IEEE 802.11g WiFi 2.4 GHz (DSSS/OFDM, 12 Mbps)	WLAN	9.62	± 9.6 %
10073	CAB	IEEE 802.11g WiFi 2.4 GHz (DSSS/OFDM, 18 Mbps)	WLAN	9.94	± 9.6 %
10074	CAB	IEEE 802.11g WiFi 2.4 GHz (DSSS/OFDM, 24 Mbps)	WLAN	10.30	± 9.6 %
10075	CAB	IEEE 802.11g WiFi 2.4 GHz (DSSS/OFDM, 36 Mbps)	WLAN	10.77	± 9.6 %
10076	CAB	IEEE 802.11g WiFi 2.4 GHz (DSSS/OFDM, 48 Mbps)	WLAN	10.94	± 9.6 %
10077	CAB	IEEE 802.11g WiFi 2.4 GHz (DSSS/OFDM, 54 Mbps)	WLAN	11.00	± 9.6 %
10081	CAB	CDMA2000 (1xRTT, RC3)	CDMA2000	3.97	± 9.6 %
10082	CAB	IS-54 / IS-136 FDD (TDMA/FDM, PI/4-DQPSK, Fullrate)	AMPS	4.77	± 9.6 %
10090	DAC	GPRS-FDD (TDMA, GMSK, TN 0-4)	GSM	6.56	± 9.6 %
10097	CAC	UMTS-FDD (HSDPA)	WCDMA	3.98	± 9.6 %
10098	DAC	UMTS-FDD (HSUPA, Subtest 2)	WCDMA	3.98	± 9.6 %

Certificate No: EF3-4048_Mar21 Page 10 of 22

This report shall not be reproduced except in full, without the written approval of TA Technology (Shanghai) Co., Ltd.

EF3DV3 – SN:4048 March 4, 2021

10099	CAC	EDGE-FDD (TDMA, 8PSK, TN 0-4)	GSM	9.55	± 9.6 %
10100	CAC	LTE-FDD (SC-FDMA, 100% RB, 20 MHz, QPSK)	LTE-FDD	5.67	± 9.6 %
10101	CAB	LTE-FDD (SC-FDMA, 100% RB, 20 MHz, 16-QAM)	LTE-FDD	6.42	± 9.6 %
10102	CAB	LTE-FDD (SC-FDMA, 100% RB, 20 MHz, 64-QAM)	LTE-FDD	6.60	± 9.6 %
10103	DAC	LTE-TDD (SC-FDMA, 100% RB, 20 MHz, QPSK)	LTE-TDD	9.29	± 9.6 %
10104	CAE	LTE-TDD (SC-FDMA, 100% RB, 20 MHz, 16-QAM)	LTE-TDD	9.97	± 9.6 %
10105	CAE	LTE-TDD (SC-FDMA, 100% RB, 20 MHz, 64-QAM)	LTE-TDD	10.01	± 9.6 %
10108	CAE	LTE-FDD (SC-FDMA, 100% RB, 10 MHz, QPSK)	LTE-FDD	5.80	± 9.6 %
10109	CAG	LTE-FDD (SC-FDMA, 100% RB, 10 MHz, 16-QAM)	LTE-FDD	6.43	± 9.6 %
10110	CAG	LTE-FDD (SC-FDMA, 100% RB, 5 MHz, QPSK)	LTE-FDD	5.75	± 9.6 %
10111	CAG	LTE-FDD (SC-FDMA, 100% RB, 5 MHz, 16-QAM)	LTE-FDD	6.44	± 9.6 %
10112	CAG	LTE-FDD (SC-FDMA, 100% RB, 10 MHz, 64-QAM)	LTE-FDD	6.59	± 9.6 %
10113	CAG	LTE-FDD (SC-FDMA, 100% RB, 5 MHz, 64-QAM)	LTE-FDD	6.62	± 9.6 %
10114	CAG	IEEE 802.11n (HT Greenfield, 13.5 Mbps, BPSK)	WLAN	8.10	± 9.6 %
10115	CAG	IEEE 802.11n (HT Greenfield, 81 Mbps, 16-QAM)	WLAN	8.46	± 9.6 %
10116	CAG	IEEE 802.11n (HT Greenfield, 135 Mbps, 64-QAM)	WLAN	8.15	± 9.6 %
10117	CAG	IEEE 802.11n (HT Mixed, 13.5 Mbps, BPSK)	WLAN	8.07	± 9.6 %
10118	CAD	IEEE 802.11n (HT Mixed, 81 Mbps, 16-QAM)	WLAN	8.59	± 9.6 %
10119	CAD	IEEE 802.11n (HT Mixed, 135 Mbps, 64-QAM)	WLAN	8.13	± 9.6 %
10140	CAD	LTE-FDD (SC-FDMA, 100% RB, 15 MHz, 16-QAM)	LTE-FDD	6.49	± 9.6 %
10141	CAD	LTE-FDD (SC-FDMA, 100% RB, 15 MHz, 64-QAM)	LTE-FDD	6.53	± 9.6 %
10142	CAD	LTE-FDD (SC-FDMA, 100% RB, 3 MHz, QPSK)	LTE-FDD	5.73	± 9.6 %
10143	CAD	LTE-FDD (SC-FDMA, 100% RB, 3 MHz, 16-QAM)	LTE-FDD	6.35	± 9.6 %
10144	CAC	LTE-FDD (SC-FDMA, 100% RB, 3 MHz, 64-QAM)	LTE-FDD	6.65	± 9.6 %
10145	CAC	LTE-FDD (SC-FDMA, 100% RB, 1.4 MHz, QPSK)	LTE-FDD	5.76	± 9.6 %
10146	CAC	LTE-FDD (SC-FDMA, 100% RB, 1.4 MHz, 16-QAM)	LTE-FDD	6.41	± 9.6 %
10147	CAC	LTE-FDD (SC-FDMA, 100% RB, 1.4 MHz, 64-QAM)	LTE-FDD	6.72	± 9.6 %
10149	CAE	LTE-FDD (SC-FDMA, 50% RB, 20 MHz, 16-QAM)	LTE-FDD	6.42	± 9.6 %
10150	CAE	LTE-FDD (SC-FDMA, 50% RB, 20 MHz, 64-QAM)	LTE-FDD	6.60	± 9.6 %
10151	CAE	LTE-TDD (SC-FDMA, 50% RB, 20 MHz, QPSK)	LTE-TDD	9.28	± 9.6 %
10152	CAE	LTE-TDD (SC-FDMA, 50% RB, 20 MHz, 16-QAM)	LTE-TDD	9.92	± 9.6 %
10153	CAE	LTE-TDD (SC-FDMA, 50% RB, 20 MHz, 64-QAM)	LTE-TDD	10.05	± 9.6 %
10154	CAF	LTE-FDD (SC-FDMA, 50% RB, 10 MHz, QPSK)	LTE-FDD	5.75	± 9.6 %
10155	CAF	LTE-FDD (SC-FDMA, 50% RB, 10 MHz, 16-QAM)	LTE-FDD	6.43	± 9.6 %
10156	CAF	LTE-FDD (SC-FDMA, 50% RB, 5 MHz, QPSK)	LTE-FDD	5.79	± 9.6 %
10157	CAE	LTE-FDD (SC-FDMA, 50% RB, 5 MHz, 16-QAM)	LTE-FDD	6.49	± 9.6 %
10158	CAE	LTE-FDD (SC-FDMA, 50% RB, 10 MHz, 64-QAM)	LTE-FDD	6.62	± 9.6 %
10159	CAG	LTE-FDD (SC-FDMA, 50% RB, 5 MHz, 64-QAM)	LTE-FDD	6.56	± 9.6 %
10160	CAG	LTE-FDD (SC-FDMA, 50% RB, 15 MHz, QPSK)	LTE-FDD	5.82	± 9.6 %
10161	CAG	LTE-FDD (SC-FDMA, 50% RB, 15 MHz, 16-QAM)	LTE-FDD	6.43	± 9.6 %
10162	CAG	LTE-FDD (SC-FDMA, 50% RB, 15 MHz, 64-QAM)	LTE-FDD	6.58	± 9.6 %
10166	CAG	LTE-FDD (SC-FDMA, 50% RB, 1.4 MHz, QPSK)	LTE-FDD	5.46	± 9.6 %
10167	CAG	LTE-FDD (SC-FDMA, 50% RB, 1.4 MHz, 16-QAM)	LTE-FDD	6.21	± 9.6 %
10168	CAG	LTE-FDD (SC-FDMA, 50% RB, 1.4 MHz, 64-QAM)	LTE-FDD	6.79	± 9.6 %
10169	CAG	LTE-FDD (SC-FDMA, 1 RB, 20 MHz, QPSK)	LTE-FDD	5.73	± 9.6 %
10170	CAG	LTE-FDD (SC-FDMA, 1 RB, 20 MHz, 16-QAM)	LTE-FDD	6.52	± 9.6 %
10171	CAE	LTE-FDD (SC-FDMA, 1 RB, 20 MHz, 64-QAM)	LTE-FDD	6.49	± 9.6 %
10172	CAE	LTE-TDD (SC-FDMA, 1 RB, 20 MHz, QPSK)	LTE-TDD	9.21	± 9.6 %
10173	CAE	LTE-TDD (SC-FDMA, 1 RB, 20 MHz, 16-QAM)	LTE-TDD	9.48	± 9.6 %
10174	CAF	LTE-TDD (SC-FDMA, 1 RB, 20 MHz, 64-QAM)	LTE-TDD	10.25	± 9.6 %
10175	CAF	LTE-FDD (SC-FDMA, 1 RB, 10 MHz, QPSK)	LTE-FDD	5.72	± 9.6 %
10176	CAF	LTE-FDD (SC-FDMA, 1 RB, 10 MHz, 16-QAM)	LTE-FDD	6.52	± 9.6 %
10177	CAE	LTE-FDD (SC-FDMA, 1 RB, 5 MHz, QPSK)	LTE-FDD	5.73	± 9.6 %
10178	CAE	LTE-FDD (SC-FDMA, 1 RB, 5 MHz, 16-QAM)	LTE-FDD	6.52	± 9.6 %
10179	AAE	LTE-FDD (SC-FDMA, 1 RB, 10 MHz, 64-QAM)	LTE-FDD	6.50	± 9.6 %
10180	CAG	LTE-FDD (SC-FDMA, 1 RB, 5 MHz, 64-QAM)	LTE-FDD	6.50	± 9.6 %

Certificate No: EF3-4048_Mar21 Page 11 of 22

This report shall not be reproduced except in full, without the written approval of TA Technology (Shanghai) Co., Ltd.

EF3DV3 – SN:4048 March 4, 2021

10181	CAG	LTE-FDD (SC-FDMA, 1 RB, 15 MHz, QPSK)	LTE-FDD	5.72	± 9.6 %
10182	CAG	LTE-FDD (SC-FDMA, 1 RB, 15 MHz, 16-QAM)	LTE-FDD	6.52	± 9.6 %
10183	CAG	LTE-FDD (SC-FDMA, 1 RB, 15 MHz, 64-QAM)	LTE-FDD	6.50	± 9.6 %
10184	CAG	LTE-FDD (SC-FDMA, 1 RB, 3 MHz, QPSK)	LTE-FDD	5.73	± 9.6 %
10185	CAI	LTE-FDD (SC-FDMA, 1 RB, 3 MHz, 16-QAM)	LTE-FDD	6.51	± 9.6 %
10186	CAG	LTE-FDD (SC-FDMA, 1 RB, 3 MHz, 64-QAM)	LTE-FDD	6.50	± 9.6 %
10187	CAG	LTE-FDD (SC-FDMA, 1 RB, 1.4 MHz, QPSK)	LTE-FDD	5.73	± 9.6 %
10188	CAG	LTE-FDD (SC-FDMA, 1 RB, 1.4 MHz, 16-QAM)	LTE-FDD	6.52	± 9.6 %
10189	CAE	LTE-FDD (SC-FDMA, 1 RB, 1.4 MHz, 64-QAM)	LTE-FDD	6.50	± 9.6 %
10193	CAE	IEEE 802.11n (HT Greenfield, 6.5 Mbps, BPSK)	WLAN	8.09	± 9.6 %
10194	AAD	IEEE 802.11n (HT Greenfield, 39 Mbps, 16-QAM)	WLAN	8.12	± 9.6 %
10195	CAE	IEEE 802.11n (HT Greenfield, 65 Mbps, 64-QAM)	WLAN	8.21	± 9.6 %
10196	CAE	IEEE 802.11n (HT Mixed, 6.5 Mbps, BPSK)	WLAN	8.10	± 9.6 %
10197	AAE	IEEE 802.11n (HT Mixed, 39 Mbps, 16-QAM)	WLAN	8.13	± 9.6 %
10198	CAF	IEEE 802.11n (HT Mixed, 65 Mbps, 64-QAM)	WLAN	8.27	± 9.6 %
10219	CAF	IEEE 802.11n (HT Mixed, 7.2 Mbps, BPSK)	WLAN	8.03	± 9.6 %
10220	AAF	IEEE 802.11n (HT Mixed, 43.3 Mbps, 16-QAM)	WLAN	8.13	± 9.6 %
10221	CAC	IEEE 802.11n (HT Mixed, 72.2 Mbps, 64-QAM)	WLAN	8.27	± 9.6 %
10222	CAC	IEEE 802.11n (HT Mixed, 15 Mbps, BPSK)	WLAN	8.06	± 9.6 %
10223	CAD	IEEE 802.11n (HT Mixed, 90 Mbps, 16-QAM)	WLAN	8.48	± 9.6 %
10224	CAD	IEEE 802.11n (HT Mixed, 150 Mbps, 64-QAM)	WLAN	8.08	± 9.6 %
10225	CAD	UMTS-FDD (HSPA+)	WCDMA	5.97	± 9.6 %
10226	CAD	LTE-TDD (SC-FDMA, 1 RB, 1.4 MHz, 16-QAM)	LTE-TDD	9.49	± 9.6 %
10227	CAD	LTE-TDD (SC-FDMA, 1 RB, 1.4 MHz, 64-QAM)	LTE-TDD	10.26	± 9.6 %
10228	CAD	LTE-TDD (SC-FDMA, 1 RB, 1.4 MHz, QPSK)	LTE-TDD	9.22	± 9.6 %
10229	DAC	LTE-TDD (SC-FDMA, 1 RB, 3 MHz, 16-QAM)	LTE-TDD	9.48	± 9.6 %
10230	CAC	LTE-TDD (SC-FDMA, 1 RB, 3 MHz, 64-QAM)	LTE-TDD	10.25	± 9.6 %
10231	CAC	LTE-TDD (SC-FDMA, 1 RB, 3 MHz, QPSK)	LTE-TDD	9.19	± 9.6 %
10232	CAD	LTE-TDD (SC-FDMA, 1 RB, 5 MHz, 16-QAM)	LTE-TDD	9.48	± 9.6 %
10233	CAD	LTE-TDD (SC-FDMA, 1 RB, 5 MHz, 64-QAM)	LTE-TDD	10.25	± 9.6 %
10234	CAD	LTE-TDD (SC-FDMA, 1 RB, 5 MHz, QPSK)	LTE-TDD	9.21	± 9.6 %
10235	CAD	LTE-TDD (SC-FDMA, 1 RB, 10 MHz, 16-QAM)	LTE-TDD	9.48	± 9.6 %
10236	CAD	LTE-TDD (SC-FDMA, 1 RB, 10 MHz, 64-QAM)	LTE-TDD	10.25	± 9.6 %
10237	CAD	LTE-TDD (SC-FDMA, 1 RB, 10 MHz, QPSK)	LTE-TDD	9.21	± 9.6 %
10238	CAB	LTE-TDD (SC-FDMA, 1 RB, 15 MHz, 16-QAM)	LTE-TDD	9.48	± 9.6 %
10239	CAB	LTE-TDD (SC-FDMA, 1 RB, 15 MHz, 64-QAM)	LTE-TDD	10.25	± 9.6 %
10240	CAB	LTE-TDD (SC-FDMA, 1 RB, 15 MHz, QPSK)	LTE-TDD	9.21	± 9.6 %
10241	CAB	LTE-TDD (SC-FDMA, 50% RB, 1.4 MHz, 16-QAM)	LTE-TDD	9.82	± 9.6 %
10242	CAD	LTE-TDD (SC-FDMA, 50% RB, 1.4 MHz, 64-QAM)	LTE-TDD	9.86	± 9.6 %
10243	CAD	LTE-TDD (SC-FDMA, 50% RB, 1.4 MHz, QPSK)	LTE-TDD	9.46	± 9.6 %
10244	CAD	LTE-TDD (SC-FDMA, 50% RB, 3 MHz, 16-QAM)	LTE-TDD	10.06	± 9.6 %
10245	CAG	LTE-TDD (SC-FDMA, 50% RB, 3 MHz, 64-QAM)	LTE-TDD	10.06	± 9.6 %
10246	CAG	LTE-TDD (SC-FDMA, 50% RB, 3 MHz, QPSK)	LTE-TDD	9.30	± 9.6 %
10247	CAG	LTE-TDD (SC-FDMA, 50% RB, 5 MHz, 16-QAM)	LTE-TDD	9.91	± 9.6 %
10248	CAG	LTE-TDD (SC-FDMA, 50% RB, 5 MHz, 64-QAM)	LTE-TDD	10.09	± 9.6 %
10249	CAG	LTE-TDD (SC-FDMA, 50% RB, 5 MHz, QPSK)	LTE-TDD	9.29	± 9.6 %
10250	CAG	LTE-TDD (SC-FDMA, 50% RB, 10 MHz, 16-QAM)	LTE-TDD	9.81	± 9.6 %
10251	CAF	LTE-TDD (SC-FDMA, 50% RB, 10 MHz, 64-QAM)	LTE-TDD	10.17	± 9.6 %
10252	CAF	LTE-TDD (SC-FDMA, 50% RB, 10 MHz, QPSK)	LTE-TDD	9.24	± 9.6 %
10253	CAF	LTE-TDD (SC-FDMA, 50% RB, 15 MHz, 16-QAM)	LTE-TDD	9.90	± 9.6 %
10254	CAB	LTE-TDD (SC-FDMA, 50% RB, 15 MHz, 64-QAM)	LTE-TDD	10.14	± 9.6 %
10255	CAB	LTE-TDD (SC-FDMA, 50% RB, 15 MHz, QPSK)	LTE-TDD	9.20	± 9.6 %
10256	CAB	LTE-TDD (SC-FDMA, 100% RB, 1.4 MHz, 16-QAM)	LTE-TDD	9.96	± 9.6 %
10257	CAD	LTE-TDD (SC-FDMA, 100% RB, 1.4 MHz, 64-QAM)	LTE-TDD	10.08	± 9.6 %
10258	CAD	LTE-TDD (SC-FDMA, 100% RB, 1.4 MHz, QPSK)	LTE-TDD	9.34	± 9.6 %
10259	CAD	LTE-TDD (SC-FDMA, 100% RB, 3 MHz, 16-QAM)	LTE-TDD	9.98	± 9.6 %

Certificate No: EF3-4048_Mar21 Page 12 of 22

This report shall not be reproduced except in full, without the written approval of TA Technology (Shanghai) Co., Ltd.

EF3DV3 – SN:4048 March 4, 2021

10260	CAG	LTE-TDD (SC-FDMA, 100% RB, 3 MHz, 64-QAM)	LTE-TDD	9.97	± 9.6 %
10261	CAG	LTE-TDD (SC-FDMA, 100% RB, 3 MHz, QPSK)	LTE-TDD	9.24	± 9.6 %
10262	CAG	LTE-TDD (SC-FDMA, 100% RB, 5 MHz, 16-QAM)	LTE-TDD	9.83	± 9.6 %
10263	CAG	LTE-TDD (SC-FDMA, 100% RB, 5 MHz, 64-QAM)	LTE-TDD	10.16	± 9.6 %
10264	CAG	LTE-TDD (SC-FDMA, 100% RB, 5 MHz, QPSK)	LTE-TDD	9.23	± 9.6 %
10265	CAG	LTE-TDD (SC-FDMA, 100% RB, 10 MHz, 16-QAM)	LTE-TDD	9.92	± 9.6 %
10266	CAF	LTE-TDD (SC-FDMA, 100% RB, 10 MHz, 64-QAM)	LTE-TDD	10.07	± 9.6 %
10267	CAF	LTE-TDD (SC-FDMA, 100% RB, 10 MHz, QPSK)	LTE-TDD	9.30	± 9.6 %
10268	CAF	LTE-TDD (SC-FDMA, 100% RB, 15 MHz, 16-QAM)	LTE-TDD	10.06	± 9.6 %
10269	CAB	LTE-TDD (SC-FDMA, 100% RB, 15 MHz, 64-QAM)	LTE-TDD	10.13	± 9.6 %
10270	CAB	LTE-TDD (SC-FDMA, 100% RB, 15 MHz, QPSK)	LTE-TDD	9.58	± 9.6 %
10274	CAB	UMTS-FDD (HSUPA, Subtest 5, 3GPP Rel8.10)	WCDMA	4.87	± 9.6 %
10275	CAD	UMTS-FDD (HSUPA, Subtest 5, 3GPP Rel8.4)	WCDMA	3.96	± 9.6 %
10277	CAD	PHS (QPSK)	PHS	11.81	± 9.6 %
10278	CAD	PHS (QPSK, BW 884MHz, Rolloff 0.5)	PHS	11.81	± 9.6 %
10279	CAG	PHS (QPSK, BW 884MHz, Rolloff 0.38)	PHS	12.18	± 9.6 %
10290	CAG	CDMA2000, RC1, SO55, Full Rate	CDMA2000	3.91	± 9.6 %
10291	CAG	CDMA2000, RC3, SO55, Full Rate	CDMA2000	3.46	± 9.6 %
10292	CAG	CDMA2000, RC3, SO32, Full Rate	CDMA2000	3.39	± 9.6 %
10293	CAG	CDMA2000, RC3, SO3, Full Rate	CDMA2000	3.50	± 9.6 %
10295	CAG	CDMA2000, RC1, SO3, 1/8th Rate 25 fr.	CDMA2000	12.49	± 9.6 %
10297	CAF	LTE-FDD (SC-FDMA, 50% RB, 20 MHz, QPSK)	LTE-FDD	5.81	± 9.6 %
10298	CAF	LTE-FDD (SC-FDMA, 50% RB, 3 MHz, QPSK)	LTE-FDD	5.72	± 9.6 %
10299	CAF	LTE-FDD (SC-FDMA, 50% RB, 3 MHz, 16-QAM)	LTE-FDD	6.39	± 9.6 %
10300	CAC	LTE-FDD (SC-FDMA, 50% RB, 3 MHz, 64-QAM)	LTE-FDD	6.60	± 9.6 %
10301	CAC	IEEE 802.16e WiMAX (29:18, 5ms, 10MHz, QPSK, PUSC)	WiMAX	12.03	± 9.6 %
10302	CAB	IEEE 802.16e WiMAX (29:18, 5ms, 10MHz, QPSK, PUSC, 3CTRL)	WiMAX	12.57	± 9.6 %
10303	CAB	IEEE 802.16e WiMAX (31:15, 5ms, 10MHz, 64QAM, PUSC)	WiMAX	12.52	± 9.6 %
10304	CAA	IEEE 802.16e WiMAX (29:18, 5ms, 10MHz, 64QAM, PUSC)	WiMAX	11.86	± 9.6 %
10305	CAA	IEEE 802.16e WiMAX (31:15, 10ms, 10MHz, 64QAM, PUSC)	WiMAX	15.24	± 9.6 %
10306	CAA	IEEE 802.16e WiMAX (29:18, 10ms, 10MHz, 64QAM, PUSC)	WiMAX	14.67	± 9.6 %
10307	AAB	IEEE 802.16e WiMAX (29:18, 10ms, 10MHz, QPSK, PUSC)	WiMAX	14.49	± 9.6 %
10308	AAB	IEEE 802.16e WiMAX (29:18, 10ms, 10MHz, 16QAM, PUSC)	WiMAX	14.46	± 9.6 %
10309	AAB	IEEE 802.16e WiMAX (29:18, 10ms, 10MHz, 16QAM,AMC 2x3)	WiMAX	14.58	± 9.6 %
10310	AAB	IEEE 802.16e WiMAX (29:18, 10ms, 10MHz, QPSK, AMC 2x3	WiMAX	14.57	± 9.6 %
10311	AAB	LTE-FDD (SC-FDMA, 100% RB, 15 MHz, QPSK)	LTE-FDD	6.06	± 9.6 %
10313	AAD	iDEN 1:3	iDEN	10.51	± 9.6 %
10314	AAD	iDEN 1:6	iDEN	13.48	± 9.6 %
10315	AAD	IEEE 802.11b WiFi 2.4 GHz (DSSS, 1 Mbps, 96pc dc)	WLAN	1.71	± 9.6 %
10316	AAD	IEEE 802.11g WiFi 2.4 GHz (ERP-OFDM, 6 Mbps, 96pc dc)	WLAN	8.36	± 9.6 %
10317	AAA	IEEE 802.11a WiFi 5 GHz (OFDM, 6 Mbps, 96pc dc)	WLAN	8.36	± 9.6 %
10352	AAA	Pulse Waveform (200Hz, 10%)	Generic	10.00	± 9.6 %
10353	AAA	Pulse Waveform (200Hz, 20%)	Generic	6.99	± 9.6 %
10354	AAA	Pulse Waveform (200Hz, 40%)	Generic	3.98	± 9.6 %
10355	AAA	Pulse Waveform (200Hz, 60%)	Generic	2.22	± 9.6 %
10356	AAA	Pulse Waveform (200Hz, 80%)	Generic	0.97	± 9.6 %
10387	AAA	QPSK Waveform, 1 MHz	Generic	5.10	± 9.6 %
10388	AAA	QPSK Waveform, 10 MHz	Generic	5.22	± 9.6 %
10396	AAA	64-QAM Waveform, 100 kHz	Generic	6.27	± 9.6 %
10399	AAA	64-QAM Waveform, 40 MHz	Generic	6.27	± 9.6 %
10400	AAD	IEEE 802.11ac WiFi (20MHz, 64-QAM, 99pc dc)	WLAN	8.37	± 9.6 %
10401	AAA	IEEE 802.11ac WiFi (40MHz, 64-QAM, 99pc dc)	WLAN	8.60	± 9.6 %
10402	AAA	IEEE 802.11ac WiFi (80MHz, 64-QAM, 99pc dc)	WLAN	8.53	± 9.6 %
10403	AAB	CDMA2000 (1xEV-DO, Rev. 0)	CDMA2000	3.76	± 9.6 %
10404	AAB	CDMA2000 (1xEV-DO, Rev. A)	CDMA2000	3.77	± 9.6 %
10406	AAD	CDMA2000, RC3, SO32, SCH0, Full Rate	CDMA2000	5.22	± 9.6 %

Certificate No: EF3-4048_Mar21 Page 13 of 22

This report shall not be reproduced except in full, without the written approval of TA Technology (Shanghai) Co., Ltd.

EF3DV3 – SN:4048 March 4, 2021

10410	AAA	LTE-TDD (SC-FDMA, 1 RB, 10 MHz, QPSK, UL Sub=2,3,4,7,8,9)	LTE-TDD	7.82	± 9.6 %
10414	AAA	WLAN CCDF, 64-QAM, 40MHz	Generic	8.54	± 9.6 %
10415	AAA	IEEE 802.11b WiFi 2.4 GHz (DSSS, 1 Mbps, 99pc dc)	WLAN	1.54	± 9.6 %
10416	AAA	IEEE 802.11g WiFi 2.4 GHz (ERP-OFDM, 6 Mbps, 99pc dc)	WLAN	8.23	± 9.6 %
10417	AAA	IEEE 802.11a/h WiFi 5 GHz (OFDM, 6 Mbps, 99pc dc)	WLAN	8.23	± 9.6 %
10418	AAA	IEEE 802.11g WiFi 2.4 GHz (DSSS-OFDM, 6 Mbps, 99pc, Long)	WLAN	8.14	± 9.6 %
10419	AAA	IEEE 802.11g WiFi 2.4 GHz (DSSS-OFDM, 6 Mbps, 99pc, Short)	WLAN	8.19	± 9.6 %
10422	AAA	IEEE 802.11n (HT Greenfield, 7.2 Mbps, BPSK)	WLAN	8.32	± 9.6 %
10423	AAA	IEEE 802.11n (HT Greenfield, 43.3 Mbps, 16-QAM)	WLAN	8.47	± 9.6 %
10424	AAE	IEEE 802.11n (HT Greenfield, 72.2 Mbps, 64-QAM)	WLAN	8.40	± 9.6 %
10425	AAE	IEEE 802.11n (HT Greenfield, 15 Mbps, BPSK)	WLAN	8.41	± 9.6 %
10426	AAE	IEEE 802.11n (HT Greenfield, 90 Mbps, 16-QAM)	WLAN	8.45	± 9.6 %
10427	AAB	IEEE 802.11n (HT Greenfield, 150 Mbps, 64-QAM)	WLAN	8.41	± 9.6 %
10430	AAB	LTE-FDD (OFDMA, 5 MHz, E-TM 3.1)	LTE-FDD	8.28	± 9.6 %
10431	AAC	LTE-FDD (OFDMA, 10 MHz, E-TM 3.1)	LTE-FDD	8.38	± 9.6 %
10432	AAB	LTE-FDD (OFDMA, 15 MHz, E-TM 3.1)	LTE-FDD	8.34	± 9.6 %
10433	AAC	LTE-FDD (OFDMA, 20 MHz, E-TM 3.1)	LTE-FDD	8.34	± 9.6 %
10434	AAG	W-CDMA (BS Test Model 1, 64 DPCH)	WCDMA	8.60	± 9.6 %
10435	AAA	LTE-TDD (SC-FDMA, 1 RB, 20 MHz, QPSK, UL Sub)	LTE-TDD	7.82	± 9.6 %
10447	AAA	LTE-FDD (OFDMA, 5 MHz, E-TM 3.1, Clipping 44%)	LTE-FDD	7.56	± 9.6 %
10448	AAA	LTE-FDD (OFDMA, 10 MHz, E-TM 3.1, Clippin 44%)	LTE-FDD	7.53	± 9.6 %
10449	AAC	LTE-FDD (OFDMA, 15 MHz, E-TM 3.1, Cliping 44%)	LTE-FDD	7.51	± 9.6 %
10450	AAA	LTE-FDD (OFDMA, 20 MHz, E-TM 3.1, Clipping 44%)	LTE-FDD	7.48	± 9.6 %
10451	AAA	W-CDMA (BS Test Model 1, 64 DPCH, Clipping 44%)	WCDMA	7.59	± 9.6 %
10453	AAC	Validation (Square, 10ms, 1ms)	Test	10.00	± 9.6 %
10456	AAC	IEEE 802.11ac WiFi (160MHz, 64-QAM, 99pc dc)	WLAN	8.63	± 9.6 %
10457	AAC	UMTS-FDD (DC-HSDPA)	WCDMA	6.62	± 9.6 %
10458	AAC	CDMA2000 (1xEV-DO, Rev. B, 2 carriers)	CDMA2000	6.55	± 9.6 %
10459	AAC	CDMA2000 (1xEV-DO, Rev. B, 3 carriers)	CDMA2000	8.25	± 9.6 %
10460	AAC	UMTS-FDD (WCDMA, AMR)	WCDMA	2.39	± 9.6 %
10461	AAC	LTE-TDD (SC-FDMA, 1 RB, 1.4 MHz, QPSK, UL Sub)	LTE-TDD	7.82	± 9.6 %
10462	AAC	LTE-TDD (SC-FDMA, 1 RB, 1.4 MHz, 16-QAM, UL Sub)	LTE-TDD	8.30	± 9.6 %
10463	AAD	LTE-TDD (SC-FDMA, 1 RB, 1.4 MHz, 64-QAM, UL Sub)	LTE-TDD	8.56	± 9.6 %
10464	AAD	LTE-TDD (SC-FDMA, 1 RB, 3 MHz, QPSK, UL Sub)	LTE-TDD	7.82	± 9.6 %
10465	AAC	LTE-TDD (SC-FDMA, 1 RB, 3 MHz, 16-QAM, UL Sub)	LTE-TDD	8.32	± 9.6 %
10466	AAC	LTE-TDD (SC-FDMA, 1 RB, 3 MHz, 64-QAM, UL Sub)	LTE-TDD	8.57	± 9.6 %
10467	AAA	LTE-TDD (SC-FDMA, 1 RB, 5 MHz, QPSK, UL Sub)	LTE-TDD	7.82	± 9.6 %
10468	AAF	LTE-TDD (SC-FDMA, 1 RB, 5 MHz, 16-QAM, UL Sub)	LTE-TDD	8.32	± 9.6 %
10469	AAD	LTE-TDD (SC-FDMA, 1 RB, 5 MHz, 64-QAM, UL Sub)	LTE-TDD	8.56	± 9.6 %
10470	AAD	LTE-TDD (SC-FDMA, 1 RB, 10 MHz, QPSK, UL Sub)	LTE-TDD	7.82	± 9.6 %
10471	AAC	LTE-TDD (SC-FDMA, 1 RB, 10 MHz, 16-QAM, UL Sub)	LTE-TDD	8.32	± 9.6 %
10472	AAC	LTE-TDD (SC-FDMA, 1 RB, 10 MHz, 64-QAM, UL Sub)	LTE-TDD	8.57	± 9.6 %
10473	AAA	LTE-TDD (SC-FDMA, 1 RB, 15 MHz, QPSK, UL Sub)	LTE-TDD	7.82	± 9.6 %
10474	AAC	LTE-TDD (SC-FDMA, 1 RB, 15 MHz, 16-QAM, UL Sub)	LTE-TDD	8.32	± 9.6 %
10475	AAD	LTE-TDD (SC-FDMA, 1 RB, 15 MHz, 64-QAM, UL Sub)	LTE-TDD	8.57	± 9.6 %
10477	AAC	LTE-TDD (SC-FDMA, 1 RB, 20 MHz, 16-QAM, UL Sub)	LTE-TDD	8.32	± 9.6 %
10478	AAC	LTE-TDD (SC-FDMA, 1 RB, 20 MHz, 64-QAM, UL Sub)	LTE-TDD	8.57	± 9.6 %
10479	AAC	LTE-TDD (SC-FDMA, 50% RB, 1.4 MHz, QPSK, UL Sub)	LTE-TDD	7.74	± 9.6 %
10480	AAA	LTE-TDD (SC-FDMA, 50% RB, 1.4 MHz, 16-QAM, UL Sub)	LTE-TDD	8.18	± 9.6 %
10481	AAA	LTE-TDD (SC-FDMA, 50% RB, 1.4 MHz, 64-QAM, UL Sub)	LTE-TDD	8.45	± 9.6 %
10482	AAA	LTE-TDD (SC-FDMA, 50% RB, 3 MHz, QPSK, UL Sub)	LTE-TDD	7.71	± 9.6 %
10483	AAA	LTE-TDD (SC-FDMA, 50% RB, 3 MHz, 16-QAM, Sub)	LTE-TDD	8.39	± 9.6 %
10484	AAB	LTE-TDD (SC-FDMA, 50% RB, 3 MHz, 64-QAM, UL Sub)	LTE-TDD	8.47	± 9.6 %
10485	AAB	LTE-TDD (SC-FDMA, 50% RB, 5 MHz, QPSK, UL Sub)	LTE-TDD	7.59	± 9.6 %
10486	AAB	LTE-TDD (SC-FDMA, 50% RB, 5 MHz, 16-QAM, UL Sub)	LTE-TDD	8.38	± 9.6 %
10487	AAC	LTE-TDD (SC-FDMA, 50% RB, 5 MHz, 64-QAM, UL Sub)	LTE-TDD	8.60	± 9.6 %

Certificate No: EF3-4048_Mar21 Page 14 of 22

This report shall not be reproduced except in full, without the written approval of TA Technology (Shanghai) Co., Ltd.

EF3DV3 – SN:4048 March 4, 2021

10488	AAC	LTE-TDD (SC-FDMA, 50% RB, 10 MHz, QPSK, UL Sub)	LTE-TDD	7.70	± 9.6 %
10489	AAC	LTE-TDD (SC-FDMA, 50% RB, 10 MHz, 16-QAM, UL Sub)	LTE-TDD	8.31	± 9.6 %
10490	AAF	LTE-TDD (SC-FDMA, 50% RB, 10 MHz, 64-QAM, UL Sub)	LTE-TDD	8.54	± 9.6 %
10491	AAF	LTE-TDD (SC-FDMA, 50% RB, 15 MHz, QPSK, UL Sub)	LTE-TDD	7.74	± 9.6 %
10492	AAF	LTE-TDD (SC-FDMA, 50% RB, 15 MHz, 16-QAM, UL Sub)	LTE-TDD	8.41	± 9.6 %
10493	AAF	LTE-TDD (SC-FDMA, 50% RB, 15 MHz, 64-QAM, UL Sub)	LTE-TDD	8.55	± 9.6 %
10494	AAF	LTE-TDD (SC-FDMA, 50% RB, 20 MHz, QPSK, UL Sub)	LTE-TDD	7.74	± 9.6 %
10495	AAF	LTE-TDD (SC-FDMA, 50% RB, 20 MHz, 16-QAM, UL Sub)	LTE-TDD	8.37	± 9.6 %
10496	AAE	LTE-TDD (SC-FDMA, 50% RB, 20 MHz, 64-QAM, UL Sub)	LTE-TDD	8.54	± 9.6 %
10497	AAE	LTE-TDD (SC-FDMA, 100% RB, 1.4 MHz, QPSK, UL Sub)	LTE-TDD	7.67	± 9.6 %
10498	AAE	LTE-TDD (SC-FDMA, 100% RB, 1.4 MHz, 16-QAM, UL Sub)	LTE-TDD	8.40	± 9.6 %
10499	AAC	LTE-TDD (SC-FDMA, 100% RB, 1.4 MHz, 64-QAM, UL Sub)	LTE-TDD	8.68	± 9.6 %
10500	AAF	LTE-TDD (SC-FDMA, 100% RB, 3 MHz, QPSK, UL Sub)	LTE-TDD	7.67	± 9.6 %
10501	AAF	LTE-TDD (SC-FDMA, 100% RB, 3 MHz, 16-QAM, UL Sub)	LTE-TDD	8.44	± 9.6 %
10502	AAB	LTE-TDD (SC-FDMA, 100% RB, 3 MHz, 64-QAM, UL Sub)	LTE-TDD	8.52	± 9.6 %
10503	AAB	LTE-TDD (SC-FDMA, 100% RB, 5 MHz, QPSK, UL Sub)	LTE-TDD	7.72	± 9.6 %
10504	AAB	LTE-TDD (SC-FDMA, 100% RB, 5 MHz, 16-QAM, UL Sub)	LTE-TDD	8.31	± 9.6 %
10505	AAC	LTE-TDD (SC-FDMA, 100% RB, 5 MHz, 64-QAM, UL Sub)	LTE-TDD	8.54	± 9.6 %
10506	AAC	LTE-TDD (SC-FDMA, 100% RB, 10 MHz, QPSK, UL Sub)	LTE-TDD	7.74	± 9.6 %
10507	AAC	LTE-TDD (SC-FDMA, 100% RB, 10 MHz, 16-QAM, UL Sub)	LTE-TDD	8.36	± 9.6 %
10508	AAF	LTE-TDD (SC-FDMA, 100% RB, 10 MHz, 64-QAM, UL Sub)	LTE-TDD	8.55	± 9.6 %
10509	AAF	LTE-TDD (SC-FDMA, 100% RB, 15 MHz, QPSK, UL Sub)	LTE-TDD	7.99	± 9.6 %
10510	AAF	LTE-TDD (SC-FDMA, 100% RB, 15 MHz, 16-QAM, UL Sub)	LTE-TDD	8.49	± 9.6 %
10511	AAF	LTE-TDD (SC-FDMA, 100% RB, 15 MHz, 64-QAM, UL Sub)	LTE-TDD	8.51	± 9.6 %
10512	AAF	LTE-TDD (SC-FDMA, 100% RB, 20 MHz, QPSK, UL Sub)	LTE-TDD	7.74	± 9.6 %
10513	AAF	LTE-TDD (SC-FDMA, 100% RB, 20 MHz, 16-QAM, UL Sub)	LTE-TDD	8.42	± 9.6 %
10514	AAE	LTE-TDD (SC-FDMA, 100% RB, 20 MHz, 64-QAM, UL Sub)	LTE-TDD	8.45	± 9.6 %
10515	AAE	IEEE 802.11b WiFi 2.4 GHz (DSSS, 2 Mbps, 99pc dc)	WLAN	1.58	± 9.6 %
10516	AAE	IEEE 802.11b WiFi 2.4 GHz (DSSS, 5.5 Mbps, 99pc dc)	WLAN	1.57	± 9.6 %
10517	AAF	IEEE 802.11b WiFi 2.4 GHz (DSSS, 11 Mbps, 99pc dc)	WLAN	1.58	± 9.6 %
10518	AAF	IEEE 802.11a/h WiFi 5 GHz (OFDM, 9 Mbps, 99pc dc)	WLAN	8.23	± 9.6 %
10519	AAF	IEEE 802.11a/h WiFi 5 GHz (OFDM, 12 Mbps, 99pc dc)	WLAN	8.39	± 9.6 %
10520	AAB	IEEE 802.11a/h WiFi 5 GHz (OFDM, 18 Mbps, 99pc dc)	WLAN	8.12	± 9.6 %
10521	AAB	IEEE 802.11a/h WiFi 5 GHz (OFDM, 24 Mbps, 99pc dc)	WLAN	7.97	± 9.6 %
10522	AAB	IEEE 802.11a/h WiFi 5 GHz (OFDM, 36 Mbps, 99pc dc)	WLAN	8.45	± 9.6 %
10523	AAC	IEEE 802.11a/h WiFi 5 GHz (OFDM, 48 Mbps, 99pc dc)	WLAN	8.08	± 9.6 %
10524	AAC	IEEE 802.11a/h WiFi 5 GHz (OFDM, 54 Mbps, 99pc dc)	WLAN	8.27	± 9.6 %
10525	AAC	IEEE 802.11ac WiFi (20MHz, MCS0, 99pc dc)	WLAN	8.36	± 9.6 %
10526	AAF	IEEE 802.11ac WiFi (20MHz, MCS1, 99pc dc)	WLAN	8.42	± 9.6 %
10527	AAF	IEEE 802.11ac WiFi (20MHz, MCS2, 99pc dc)	WLAN	8.21	± 9.6 %
10528	AAF	IEEE 802.11ac WiFi (20MHz, MCS3, 99pc dc)	WLAN	8.36	± 9.6 %
10529	AAF	IEEE 802.11ac WiFi (20MHz, MCS4, 99pc dc)	WLAN	8.36	± 9.6 %
10531	AAF	IEEE 802.11ac WiFi (20MHz, MCS6, 99pc dc)	WLAN	8.43	± 9.6 %
10532	AAF	IEEE 802.11ac WiFi (20MHz, MCS7, 99pc dc)	WLAN	8.29	± 9.6 %
10533	AAE	IEEE 802.11ac WiFi (20MHz, MCS8, 99pc dc)	WLAN	8.38	± 9.6 %
10534	AAE	IEEE 802.11ac WiFi (40MHz, MCS0, 99pc dc)	WLAN	8.45	± 9.6 %
10535	AAE	IEEE 802.11ac WiFi (40MHz, MCS1, 99pc dc)	WLAN	8.45	± 9.6 %
10536	AAF	IEEE 802.11ac WiFi (40MHz, MCS2, 99pc dc)	WLAN	8.32	± 9.6 %
10537	AAF	IEEE 802.11ac WiFi (40MHz, MCS3, 99pc dc)	WLAN	8.44	± 9.6 %
10538	AAF	IEEE 802.11ac WiFi (40MHz, MCS4, 99pc dc)	WLAN	8.54	± 9.6 %
10540	AAA	IEEE 802.11ac WiFi (40MHz, MCS6, 99pc dc)	WLAN	8.39	± 9.6 %
10541	AAA	IEEE 802.11ac WiFi (40MHz, MCS7, 99pc dc)	WLAN	8.46	± 9.6 %
10542	AAA	IEEE 802.11ac WiFi (40MHz, MCS8, 99pc dc)	WLAN	8.65	± 9.6 %
10543	AAC	IEEE 802.11ac WiFi (40MHz, MCS9, 99pc dc)	WLAN	8.65	± 9.6 %
10544	AAC	IEEE 802.11ac WiFi (80MHz, MCS0, 99pc dc)	WLAN	8.47	± 9.6 %
10545	AAC	IEEE 802.11ac WiFi (80MHz, MCS1, 99pc dc)	WLAN	8.55	± 9.6 %

Certificate No: EF3-4048_Mar21 Page 15 of 22

This report shall not be reproduced except in full, without the written approval of TA Technology (Shanghai) Co., Ltd.

EF3DV3 – SN:4048 March 4, 2021

10546	AAC	IEEE 802.11ac WiFi (80MHz, MCS2, 99pc dc)	WLAN	8.35	± 9.6 %
10547	AAC	IEEE 802.11ac WiFi (80MHz, MCS3, 99pc dc)	WLAN	8.49	± 9.6 %
10548	AAC	IEEE 802.11ac WiFi (80MHz, MCS4, 99pc dc)	WLAN	8.37	± 9.6 %
10550	AAC	IEEE 802.11ac WiFi (80MHz, MCS6, 99pc dc)	WLAN	8.38	± 9.6 %
10551	AAC	IEEE 802.11ac WiFi (80MHz, MCS7, 99pc dc)	WLAN	8.50	± 9.6 %
10552	AAC	IEEE 802.11ac WiFi (80MHz, MCS8, 99pc dc)	WLAN	8.42	± 9.6 %
10553	AAC	IEEE 802.11ac WiFi (80MHz, MCS9, 99pc dc)	WLAN	8.45	± 9.6 %
10554	AAC	IEEE 802.11ac WiFi (160MHz, MCS0, 99pc dc)	WLAN	8.48	± 9.6 %
10555	AAC	IEEE 802.11ac WiFi (160MHz, MCS1, 99pc dc)	WLAN	8.47	± 9.6 %
10556	AAC	IEEE 802.11ac WiFi (160MHz, MCS2, 99pc dc)	WLAN	8.50	± 9.6 %
10557	AAC	IEEE 802.11ac WiFi (160MHz, MCS3, 99pc dc)	WLAN	8.52	± 9.6 %
10558	AAC	IEEE 802.11ac WiFi (160MHz, MCS4, 99pc dc)	WLAN	8.61	± 9.6 %
10560	AAC	IEEE 802.11ac WiFi (160MHz, MCS6, 99pc dc)	WLAN	8.73	± 9.6 %
10561	AAC	IEEE 802.11ac WiFi (160MHz, MCS7, 99pc dc)	WLAN	8.56	± 9.6 %
10562	AAC	IEEE 802.11ac WiFi (160MHz, MCS8, 99pc dc)	WLAN	8.69	± 9.6 %
10563	AAC	IEEE 802.11ac WiFi (160MHz, MCS9, 99pc dc)	WLAN	8.77	± 9.6 %
10564	AAC	IEEE 802.11g WiFi 2.4 GHz (DSSS-OFDM, 9 Mbps, 99pc dc)	WLAN	8.25	± 9.6 %
10565	AAC	IEEE 802.11g WiFi 2.4 GHz (DSSS-OFDM, 12 Mbps, 99pc dc)	WLAN	8.45	± 9.6 %
10566	AAC	IEEE 802.11g WiFi 2.4 GHz (DSSS-OFDM, 18 Mbps, 99pc dc)	WLAN	8.13	± 9.6 %
10567	AAC	IEEE 802.11g WiFi 2.4 GHz (DSSS-OFDM, 24 Mbps, 99pc dc)	WLAN	8.00	± 9.6 %
10568	AAC	IEEE 802.11g WiFi 2.4 GHz (DSSS-OFDM, 36 Mbps, 99pc dc)	WLAN	8.37	± 9.6 %
10569	AAC	IEEE 802.11g WiFi 2.4 GHz (DSSS-OFDM, 48 Mbps, 99pc dc)	WLAN	8.10	± 9.6 %
10570	AAC	IEEE 802.11g WiFi 2.4 GHz (DSSS-OFDM, 54 Mbps, 99pc dc)	WLAN	8.30	± 9.6 %
10571	AAC	IEEE 802.11b WiFi 2.4 GHz (DSSS, 1 Mbps, 90pc dc)	WLAN	1.99	± 9.6 %
10572	AAC	IEEE 802.11b WiFi 2.4 GHz (DSSS, 2 Mbps, 90pc dc)	WLAN	1.99	± 9.6 %
10573	AAC	IEEE 802.11b WiFi 2.4 GHz (DSSS, 5.5 Mbps, 90pc dc)	WLAN	1.98	± 9.6 %
10574	AAC	IEEE 802.11b WiFi 2.4 GHz (DSSS, 11 Mbps, 90pc dc)	WLAN	1.98	± 9.6 %
10575	AAC	IEEE 802.11g WiFi 2.4 GHz (DSSS-OFDM, 6 Mbps, 90pc dc)	WLAN	8.59	± 9.6 %
10576	AAC	IEEE 802.11g WiFi 2.4 GHz (DSSS-OFDM, 9 Mbps, 90pc dc)	WLAN	8.60	± 9.6 %
10577	AAC	IEEE 802.11g WiFi 2.4 GHz (DSSS-OFDM, 12 Mbps, 90pc dc)	WLAN	8.70	± 9.6 %
10578	AAD	IEEE 802.11g WiFi 2.4 GHz (DSSS-OFDM, 18 Mbps, 90pc dc)	WLAN	8.49	± 9.6 %
10579	AAD	IEEE 802.11g WiFi 2.4 GHz (DSSS-OFDM, 24 Mbps, 90pc dc)	WLAN	8.36	± 9.6 %
10580	AAD	IEEE 802.11g WiFi 2.4 GHz (DSSS-OFDM, 36 Mbps, 90pc dc)	WLAN	8.76	± 9.6 %
10581	AAD	IEEE 802.11g WiFi 2.4 GHz (DSSS-OFDM, 48 Mbps, 90pc dc)	WLAN	8.35	± 9.6 %
10582	AAD	IEEE 802.11g WiFi 2.4 GHz (DSSS-OFDM, 54 Mbps, 90pc dc)	WLAN	8.67	± 9.6 %
10583	AAD	IEEE 802.11a/h WiFi 5 GHz (OFDM, 6 Mbps, 90pc dc)	WLAN	8.59	± 9.6 %
10584	AAD	IEEE 802.11a/h WiFi 5 GHz (OFDM, 9 Mbps, 90pc dc)	WLAN	8.60	± 9.6 %
10585	AAD	IEEE 802.11a/h WiFi 5 GHz (OFDM, 12 Mbps, 90pc dc)	WLAN	8.70	± 9.6 %
10586	AAD	IEEE 802.11a/h WiFi 5 GHz (OFDM, 18 Mbps, 90pc dc)	WLAN	8.49	± 9.6 %
10587	AAA	IEEE 802.11a/h WiFi 5 GHz (OFDM, 24 Mbps, 90pc dc)	WLAN	8.36	± 9.6 %
10588	AAA	IEEE 802.11a/h WiFi 5 GHz (OFDM, 36 Mbps, 90pc dc)	WLAN	8.76	± 9.6 %
10589	AAA	IEEE 802.11a/h WiFi 5 GHz (OFDM, 48 Mbps, 90pc dc)	WLAN	8.35	± 9.6 %
10590	AAA	IEEE 802.11a/h WiFi 5 GHz (OFDM, 54 Mbps, 90pc dc)	WLAN	8.67	± 9.6 %
10591	AAA	IEEE 802.11n (HT Mixed, 20MHz, MCS0, 90pc dc)	WLAN	8.63	± 9.6 %
10592	AAA	IEEE 802.11n (HT Mixed, 20MHz, MCS1, 90pc dc)	WLAN	8.79	± 9.6 %
10593	AAA	IEEE 802.11n (HT Mixed, 20MHz, MCS2, 90pc dc)	WLAN	8.64	± 9.6 %
10594	AAA	IEEE 802.11n (HT Mixed, 20MHz, MCS3, 90pc dc)	WLAN	8.74	± 9.6 %
10595	AAA	IEEE 802.11n (HT Mixed, 20MHz, MCS4, 90pc dc)	WLAN	8.74	± 9.6 %
10596	AAA	IEEE 802.11n (HT Mixed, 20MHz, MCS5, 90pc dc)	WLAN	8.71	± 9.6 %
10597	AAA	IEEE 802.11n (HT Mixed, 20MHz, MCS6, 90pc dc)	WLAN	8.72	± 9.6 %
10598	AAA	IEEE 802.11n (HT Mixed, 20MHz, MCS7, 90pc dc)	WLAN	8.50	± 9.6 %
10599	AAA	IEEE 802.11n (HT Mixed, 40MHz, MCS0, 90pc dc)	WLAN	8.79	± 9.6 %
10600	AAA	IEEE 802.11n (HT Mixed, 40MHz, MCS1, 90pc dc)	WLAN	8.88	± 9.6 %
10601	AAA	IEEE 802.11n (HT Mixed, 40MHz, MCS2, 90pc dc)	WLAN	8.82	± 9.6 %
10602	AAA	IEEE 802.11n (HT Mixed, 40MHz, MCS3, 90pc dc)	WLAN	8.94	± 9.6 %
10603	AAA	IEEE 802.11n (HT Mixed, 40MHz, MCS4, 90pc dc)	WLAN	9.03	± 9.6 %

Certificate No: EF3-4048_Mar21 Page 16 of 22

This report shall not be reproduced except in full, without the written approval of TA Technology (Shanghai) Co., Ltd.

EF3DV3 – SN:4048 March 4, 2021

10604	AAA	IEEE 802.11n (HT Mixed, 40MHz, MCS5, 90pc dc)	WLAN	8.76	± 9.6 %
10605	AAA	IEEE 802.11n (HT Mixed, 40MHz, MCS6, 90pc dc)	WLAN	8.97	± 9.6 %
10606	AAC	IEEE 802.11n (HT Mixed, 40MHz, MCS7, 90pc dc)	WLAN	8.82	± 9.6 %
10607	AAC	IEEE 802.11ac WiFi (20MHz, MCS0, 90pc dc)	WLAN	8.64	± 9.6 %
10608	AAC	IEEE 802.11ac WiFi (20MHz, MCS1, 90pc dc)	WLAN	8.77	± 9.6 %
10609	AAC	IEEE 802.11ac WiFi (20MHz, MCS2, 90pc dc)	WLAN	8.57	± 9.6 %
10610	AAC	IEEE 802.11ac WiFi (20MHz, MCS3, 90pc dc)	WLAN	8.78	± 9.6 %
10611	AAC	IEEE 802.11ac WiFi (20MHz, MCS4, 90pc dc)	WLAN	8.70	± 9.6 %
10612	AAC	IEEE 802.11ac WiFi (20MHz, MCS5, 90pc dc)	WLAN	8.77	± 9.6 %
10613	AAC	IEEE 802.11ac WiFi (20MHz, MCS6, 90pc dc)	WLAN	8.94	± 9.6 %
10614	AAC	IEEE 802.11ac WiFi (20MHz, MCS7, 90pc dc)	WLAN	8.59	± 9.6 %
10615	AAC	IEEE 802.11ac WiFi (20MHz, MCS8, 90pc dc)	WLAN	8.82	± 9.6 %
10616	AAC	IEEE 802.11ac WiFi (40MHz, MCS0, 90pc dc)	WLAN	8.82	± 9.6 %
10617	AAC	IEEE 802.11ac WiFi (40MHz, MCS1, 90pc dc)	WLAN	8.81	± 9.6 %
10618	AAC	IEEE 802.11ac WiFi (40MHz, MCS2, 90pc dc)	WLAN	8.58	± 9.6 %
10619	AAC	IEEE 802.11ac WiFi (40MHz, MCS3, 90pc dc)	WLAN	8.86	± 9.6 %
10620	AAC	IEEE 802.11ac WiFi (40MHz, MCS4, 90pc dc)	WLAN	8.87	± 9.6 %
10621	AAC	IEEE 802.11ac WiFi (40MHz, MCS5, 90pc dc)	WLAN	8.77	± 9.6 %
10622	AAC	IEEE 802.11ac WiFi (40MHz, MCS6, 90pc dc)	WLAN	8.68	± 9.6 %
10623	AAC	IEEE 802.11ac WiFi (40MHz, MCS7, 90pc dc)	WLAN	8.82	± 9.6 %
10624	AAC	IEEE 802.11ac WiFi (40MHz, MCS8, 90pc dc)	WLAN	8.96	± 9.6 %
10625	AAC	IEEE 802.11ac WiFi (40MHz, MCS9, 90pc dc)	WLAN	8.96	± 9.6 %
10626	AAC	IEEE 802.11ac WiFi (80MHz, MCS0, 90pc dc)	WLAN	8.83	± 9.6 %
10627	AAC	IEEE 802.11ac WiFi (80MHz, MCS1, 90pc dc)	WLAN	8.88	± 9.6 %
10628	AAC	IEEE 802.11ac WiFi (80MHz, MCS2, 90pc dc)	WLAN	8.71	± 9.6 %
10629	AAC	IEEE 802.11ac WiFi (80MHz, MCS3, 90pc dc)	WLAN	8.85	± 9.6 %
10630	AAC	IEEE 802.11ac WiFi (80MHz, MCS4, 90pc dc)	WLAN	8.72	± 9.6 %
10631	AAC	IEEE 802.11ac WiFi (80MHz, MCS5, 90pc dc)	WLAN	8.81	± 9.6 %
10632	AAC	IEEE 802.11ac WiFi (80MHz, MCS6, 90pc dc)	WLAN	8.74	± 9.6 %
10633	AAC	IEEE 802.11ac WiFi (80MHz, MCS7, 90pc dc)	WLAN	8.83	± 9.6 %
10634	AAC	IEEE 802.11ac WiFi (80MHz, MCS8, 90pc dc)	WLAN	8.80	± 9.6 %
10635	AAC	IEEE 802.11ac WiFi (80MHz, MCS9, 90pc dc)	WLAN	8.81	± 9.6 %
10636	AAC	IEEE 802.11ac WiFi (160MHz, MCS0, 90pc dc)	WLAN	8.83	± 9.6 %
10637	AAC	IEEE 802.11ac WiFi (160MHz, MCS1, 90pc dc)	WLAN	8.79	± 9.6 %
10638	AAC	IEEE 802.11ac WiFi (160MHz, MCS2, 90pc dc)	WLAN	8.86	± 9.6 %
10639	AAC	IEEE 802.11ac WiFi (160MHz, MCS3, 90pc dc)	WLAN	8.85	± 9.6 %
10640	AAC	IEEE 802.11ac WiFi (160MHz, MCS4, 90pc dc)	WLAN	8.98	± 9.6 %
10641	AAC	IEEE 802.11ac WiFi (160MHz, MCS5, 90pc dc)	WLAN	9.06	± 9.6 %
10642	AAC	IEEE 802.11ac WiFi (160MHz, MCS6, 90pc dc)	WLAN	9.06	± 9.6 %
10643	AAC	IEEE 802.11ac WiFi (160MHz, MCS7, 90pc dc)	WLAN	8.89	± 9.6 %
10644	AAC	IEEE 802.11ac WiFi (160MHz, MCS8, 90pc dc)	WLAN	9.05	± 9.6 %
10645	AAC	IEEE 802.11ac WiFi (160MHz, MCS9, 90pc dc)	WLAN	9.11	± 9.6 %
10646	AAC	LTE-TDD (SC-FDMA, 1 RB, 5 MHz, QPSK, UL Sub=2,7)	LTE-TDD	11.96	± 9.6 %
10647	AAC	LTE-TDD (SC-FDMA, 1 RB, 20 MHz, QPSK, UL Sub=2,7)	LTE-TDD	11.96	± 9.6 %
10648	AAC	CDMA2000 (1x Advanced)	CDMA2000	3.45	± 9.6 %
10652	AAC	LTE-TDD (OFDMA, 5 MHz, E-TM 3.1, Clipping 44%)	LTE-TDD	6.91	± 9.6 %
10653	AAC	LTE-TDD (OFDMA, 10 MHz, E-TM 3.1, Clipping 44%)	LTE-TDD	7.42	± 9.6 %
10654	AAC	LTE-TDD (OFDMA, 15 MHz, E-TM 3.1, Clipping 44%)	LTE-TDD	6.96	± 9.6 %
10655	AAC	LTE-TDD (OFDMA, 20 MHz, E-TM 3.1, Clipping 44%)	LTE-TDD	7.21	± 9.6 %
10658	AAC	Pulse Waveform (200Hz, 10%)	Test	10.00	± 9.6 %
10659	AAC	Pulse Waveform (200Hz, 20%)	Test	6.99	± 9.6 %
10660	AAC	Pulse Waveform (200Hz, 40%)	Test	3.98	± 9.6 %
10661	AAC	Pulse Waveform (200Hz, 60%)	Test	2.22	± 9.6 %
10662	AAC	Pulse Waveform (200Hz, 80%)	Test	0.97	± 9.6 %
10670	AAC	Bluetooth Low Energy	Bluetooth	2.19	± 9.6 %
10671	AAD	IEEE 802.11ax (20MHz, MCS0, 90pc dc)	WLAN	9.09	± 9.6 %

Certificate No: EF3-4048_Mar21 Page 17 of 22

This report shall not be reproduced except in full, without the written approval of TA Technology (Shanghai) Co., Ltd.

EF3DV3 – SN:4048 March 4, 2021

10672	AAD	IEEE 802.11ax (20MHz, MCS1, 90pc dc)	WLAN	8.57	± 9.6 %
10673	AAD	IEEE 802.11ax (20MHz, MCS2, 90pc dc)	WLAN	8.78	± 9.6 %
10674	AAD	IEEE 802.11ax (20MHz, MCS3, 90pc dc)	WLAN	8.74	± 9.6 %
10675	AAD	IEEE 802.11ax (20MHz, MCS4, 90pc dc)	WLAN	8.90	± 9.6 %
10676	AAD	IEEE 802.11ax (20MHz, MCS5, 90pc dc)	WLAN	8.77	± 9.6 %
10677	AAD	IEEE 802.11ax (20MHz, MCS6, 90pc dc)	WLAN	8.73	± 9.6 %
10678	AAD	IEEE 802.11ax (20MHz, MCS7, 90pc dc)	WLAN	8.78	± 9.6 %
10679	AAD	IEEE 802.11ax (20MHz, MCS8, 90pc dc)	WLAN	8.89	± 9.6 %
10680	AAD	IEEE 802.11ax (20MHz, MCS9, 90pc dc)	WLAN	8.80	± 9.6 %
10681	AAG	IEEE 802.11ax (20MHz, MCS10, 90pc dc)	WLAN	8.62	± 9.6 %
10682	AAF	IEEE 802.11ax (20MHz, MCS11, 90pc dc)	WLAN	8.83	± 9.6 %
10683	AAA	IEEE 802.11ax (20MHz, MCS0, 99pc dc)	WLAN	8.42	± 9.6 %
10684	AAC	IEEE 802.11ax (20MHz, MCS1, 99pc dc)	WLAN	8.26	± 9.6 %
10685	AAC	IEEE 802.11ax (20MHz, MCS2, 99pc dc)	WLAN	8.33	± 9.6 %
10686	AAC	IEEE 802.11ax (20MHz, MCS3, 99pc dc)	WLAN	8.28	± 9.6 %
10687	AAE	IEEE 802.11ax (20MHz, MCS4, 99pc dc)	WLAN	8.45	± 9.6 %
10688	AAE	IEEE 802.11ax (20MHz, MCS5, 99pc dc)	WLAN	8.29	± 9.6 %
10689	AAD	IEEE 802.11ax (20MHz, MCS6, 99pc dc)	WLAN	8.55	± 9.6 %
10690	AAE	IEEE 802.11ax (20MHz, MCS7, 99pc dc)	WLAN	8.29	± 9.6 %
10691	AAB	IEEE 802.11ax (20MHz, MCS8, 99pc dc)	WLAN	8.25	± 9.6 %
10692	AAA	IEEE 802.11ax (20MHz, MCS9, 99pc dc)	WLAN	8.29	± 9.6 %
10693	AAA	IEEE 802.11ax (20MHz, MCS10, 99pc dc)	WLAN	8.25	± 9.6 %
10694	AAA	IEEE 802.11ax (20MHz, MCS11, 99pc dc)	WLAN	8.57	± 9.6 %
10695	AAA	IEEE 802.11ax (40MHz, MCS0, 90pc dc)	WLAN	8.78	± 9.6 %
10696	AAA	IEEE 802.11ax (40MHz, MCS1, 90pc dc)	WLAN	8.91	± 9.6 %
10697	AAA	IEEE 802.11ax (40MHz, MCS2, 90pc dc)	WLAN	8.61	± 9.6 %
10698	AAA	IEEE 802.11ax (40MHz, MCS3, 90pc dc)	WLAN	8.89	± 9.6 %
10699	AAA	IEEE 802.11ax (40MHz, MCS4, 90pc dc)	WLAN	8.82	± 9.6 %
10700	AAA	IEEE 802.11ax (40MHz, MCS5, 90pc dc)	WLAN	8.73	± 9.6 %
10701	AAA	IEEE 802.11ax (40MHz, MCS6, 90pc dc)	WLAN	8.86	± 9.6 %
10702	AAA	IEEE 802.11ax (40MHz, MCS7, 90pc dc)	WLAN	8.70	± 9.6 %
10703	AAA	IEEE 802.11ax (40MHz, MCS8, 90pc dc)	WLAN	8.82	± 9.6 %
10704	AAA	IEEE 802.11ax (40MHz, MCS9, 90pc dc)	WLAN	8.56	± 9.6 %
10705	AAA	IEEE 802.11ax (40MHz, MCS10, 90pc dc)	WLAN	8.69	± 9.6 %
10706	AAC	IEEE 802.11ax (40MHz, MCS11, 90pc dc)	WLAN	8.66	± 9.6 %
10707	AAC	IEEE 802.11ax (40MHz, MCS0, 99pc dc)	WLAN	8.32	± 9.6 %
10708	AAC	IEEE 802.11ax (40MHz, MCS1, 99pc dc)	WLAN	8.55	± 9.6 %
10709	AAC	IEEE 802.11ax (40MHz, MCS2, 99pc dc)	WLAN	8.33	± 9.6 %
10710	AAC	IEEE 802.11ax (40MHz, MCS3, 99pc dc)	WLAN	8.29	± 9.6 %
10711	AAC	IEEE 802.11ax (40MHz, MCS4, 99pc dc)	WLAN	8.39	± 9.6 %
10712	AAC	IEEE 802.11ax (40MHz, MCS5, 99pc dc)	WLAN	8.67	± 9.6 %
10713	AAC	IEEE 802.11ax (40MHz, MCS6, 99pc dc)	WLAN	8.33	± 9.6 %
10714	AAC	IEEE 802.11ax (40MHz, MCS7, 99pc dc)	WLAN	8.26	± 9.6 %
10715	AAC	IEEE 802.11ax (40MHz, MCS8, 99pc dc)	WLAN	8.45	± 9.6 %
10716	AAC	IEEE 802.11ax (40MHz, MCS9, 99pc dc)	WLAN	8.30	± 9.6 %
10717	AAC	IEEE 802.11ax (40MHz, MCS10, 99pc dc)	WLAN	8.48	± 9.6 %
10718	AAC	IEEE 802.11ax (40MHz, MCS11, 99pc dc)	WLAN	8.24	± 9.6 %
10719	AAC	IEEE 802.11ax (80MHz, MCS0, 90pc dc)	WLAN	8.81	± 9.6 %
10720	AAC	IEEE 802.11ax (80MHz, MCS1, 90pc dc)	WLAN	8.87	± 9.6 %
10721	AAC	IEEE 802.11ax (80MHz, MCS2, 90pc dc)	WLAN	8.76	± 9.6 %
10722	AAC	IEEE 802.11ax (80MHz, MCS3, 90pc dc)	WLAN	8.55	± 9.6 %
10723	AAC	IEEE 802.11ax (80MHz, MCS4, 90pc dc)	WLAN	8.70	± 9.6 %
10724	AAC	IEEE 802.11ax (80MHz, MCS5, 90pc dc)	WLAN	8.90	± 9.6 %
10725	AAC	IEEE 802.11ax (80MHz, MCS6, 90pc dc)	WLAN	8.74	± 9.6 %
10726	AAC	IEEE 802.11ax (80MHz, MCS7, 90pc dc)	WLAN	8.72	± 9.6 %
10727	AAC	IEEE 802.11ax (80MHz, MCS8, 90pc dc)	WLAN	8.66	± 9.6 %

Certificate No: EF3-4048_Mar21 Page 18 of 22

This report shall not be reproduced except in full, without the written approval of TA Technology (Shanghai) Co., Ltd.

EF3DV3 – SN:4048 March 4, 2021

10728	AAC	IEEE 802.11ax (80MHz, MCS9, 90pc dc)	WLAN	8.65	± 9.6 %
10729	AAC	IEEE 802.11ax (80MHz, MCS10, 90pc dc)	WLAN	8.64	± 9.6 %
10730	AAC	IEEE 802.11ax (80MHz, MCS11, 90pc dc)	WLAN	8.67	± 9.6 %
10731	AAC	IEEE 802.11ax (80MHz, MCS0, 99pc dc)	WLAN	8.42	± 9.6 %
10732	AAC	IEEE 802.11ax (80MHz, MCS1, 99pc dc)	WLAN	8.46	± 9.6 %
10733	AAC	IEEE 802.11ax (80MHz, MCS2, 99pc dc)	WLAN	8.40	± 9.6 %
10734	AAC	IEEE 802.11ax (80MHz, MCS3, 99pc dc)	WLAN	8.25	± 9.6 %
10735	AAC	IEEE 802.11ax (80MHz, MCS4, 99pc dc)	WLAN	8.33	± 9.6 %
10736	AAC	IEEE 802.11ax (80MHz, MCS5, 99pc dc)	WLAN	8.27	± 9.6 %
10737	AAC	IEEE 802.11ax (80MHz, MCS6, 99pc dc)	WLAN	8.36	± 9.6 %
10738	AAC	IEEE 802.11ax (80MHz, MCS7, 99pc dc)	WLAN	8.42	± 9.6 %
10739	AAC	IEEE 802.11ax (80MHz, MCS8, 99pc dc)	WLAN	8.29	± 9.6 %
10740	AAC	IEEE 802.11ax (80MHz, MCS9, 99pc dc)	WLAN	8.48	± 9.6 %
10741	AAC	IEEE 802.11ax (80MHz, MCS10, 99pc dc)	WLAN	8.40	± 9.6 %
10742	AAC	IEEE 802.11ax (80MHz, MCS11, 99pc dc)	WLAN	8.43	± 9.6 %
10743	AAC	IEEE 802.11ax (160MHz, MCS0, 90pc dc)	WLAN	8.94	± 9.6 %
10744	AAC	IEEE 802.11ax (160MHz, MCS1, 90pc dc)	WLAN	9.16	± 9.6 %
10745	AAC	IEEE 802.11ax (160MHz, MCS2, 90pc dc)	WLAN	8.93	± 9.6 %
10746	AAC	IEEE 802.11ax (160MHz, MCS3, 90pc dc)	WLAN	9.11	± 9.6 %
10747	AAC	IEEE 802.11ax (160MHz, MCS4, 90pc dc)	WLAN	9.04	± 9.6 %
10748	AAC	IEEE 802.11ax (160MHz, MCS5, 90pc dc)	WLAN	8.93	± 9.6 %
10749	AAC	IEEE 802.11ax (160MHz, MCS6, 90pc dc)	WLAN	8.90	± 9.6 %
10750	AAC	IEEE 802.11ax (160MHz, MCS7, 90pc dc)	WLAN	8.79	± 9.6 %
10751	AAC	IEEE 802.11ax (160MHz, MCS8, 90pc dc)	WLAN	8.82	± 9.6 %
10752	AAC	IEEE 802.11ax (160MHz, MCS9, 90pc dc)	WLAN	8.81	± 9.6 %
10753	AAC	IEEE 802.11ax (160MHz, MCS10, 90pc dc)	WLAN	9.00	± 9.6 %
10754	AAC	IEEE 802.11ax (160MHz, MCS11, 90pc dc)	WLAN	8.94	± 9.6 %
10755	AAC	IEEE 802.11ax (160MHz, MCS0, 99pc dc)	WLAN	8.64	± 9.6 %
10756	AAC	IEEE 802.11ax (160MHz, MCS1, 99pc dc)	WLAN	8.77	± 9.6 %
10757	AAC	IEEE 802.11ax (160MHz, MCS2, 99pc dc)	WLAN	8.77	± 9.6 %
10758	AAC	IEEE 802.11ax (160MHz, MCS3, 99pc dc)	WLAN	8.69	± 9.6 %
10759	AAC	IEEE 802.11ax (160MHz, MCS4, 99pc dc)	WLAN	8.58	± 9.6 %
10760	AAC	IEEE 802.11ax (160MHz, MCS5, 99pc dc)	WLAN	8.49	± 9.6 %
10761	AAC	IEEE 802.11ax (160MHz, MCS6, 99pc dc)	WLAN	8.58	± 9.6 %
10762	AAC	IEEE 802.11ax (160MHz, MCS7, 99pc dc)	WLAN	8.49	± 9.6 %
10763	AAC	IEEE 802.11ax (160MHz, MCS8, 99pc dc)	WLAN	8.53	± 9.6 %
10764	AAC	IEEE 802.11ax (160MHz, MCS9, 99pc dc)	WLAN	8.54	± 9.6 %
10765	AAC	IEEE 802.11ax (160MHz, MCS10, 99pc dc)	WLAN	8.54	± 9.6 %
10766	AAC	IEEE 802.11ax (160MHz, MCS11, 99pc dc)	WLAN	8.51	± 9.6 %
10767	AAC	5G NR (CP-OFDM, 1 RB, 5 MHz, QPSK, 15 kHz)	5G NR FR1 TDD	7.99	± 9.6 %
10768	AAC	5G NR (CP-OFDM, 1 RB, 10 MHz, QPSK, 15 kHz)	5G NR FR1 TDD	8.01	± 9.6 %
10769	AAC	5G NR (CP-OFDM, 1 RB, 15 MHz, QPSK, 15 kHz)	5G NR FR1 TDD	8.01	± 9.6 %
10770	AAC	5G NR (CP-OFDM, 1 RB, 20 MHz, QPSK, 15 kHz)	5G NR FR1 TDD	8.02	± 9.6 %
10771	AAC	5G NR (CP-OFDM, 1 RB, 25 MHz, QPSK, 15 kHz)	5G NR FR1 TDD	8.02	± 9.6 %
10772	AAC	5G NR (CP-OFDM, 1 RB, 30 MHz, QPSK, 15 kHz)	5G NR FR1 TDD	8.23	± 9.6 %
10773	AAC	5G NR (CP-OFDM, 1 RB, 40 MHz, QPSK, 15 kHz)	5G NR FR1 TDD	8.03	± 9.6 %
10774	AAC	5G NR (CP-OFDM, 1 RB, 50 MHz, QPSK, 15 kHz)	5G NR FR1 TDD	8.02	± 9.6 %
10775	AAC	5G NR (CP-OFDM, 50% RB, 5 MHz, QPSK, 15 kHz)	5G NR FR1 TDD	8.31	± 9.6 %
10776	AAC	5G NR (CP-OFDM, 50% RB, 10 MHz, QPSK, 15 kHz)	5G NR FR1 TDD	8.30	± 9.6 %
10777	AAC	5G NR (CP-OFDM, 50% RB, 15 MHz, QPSK, 15 kHz)	5G NR FR1 TDD	8.30	± 9.6 %
10778	AAC	5G NR (CP-OFDM, 50% RB, 20 MHz, QPSK, 15 kHz)	5G NR FR1 TDD	8.34	± 9.6 %
10779	AAC	5G NR (CP-OFDM, 50% RB, 25 MHz, QPSK, 15 kHz)	5G NR FR1 TDD	8.42	± 9.6 %
10780	AAC	5G NR (CP-OFDM, 50% RB, 30 MHz, QPSK, 15 kHz)	5G NR FR1 TDD	8.38	± 9.6 %
10781	AAC	5G NR (CP-OFDM, 50% RB, 40 MHz, QPSK, 15 kHz)	5G NR FR1 TDD	8.38	± 9.6 %
10782	AAC	5G NR (CP-OFDM, 50% RB, 50 MHz, QPSK, 15 kHz)	5G NR FR1 TDD	8.43	± 9.6 %
10783	AAC	5G NR (CP-OFDM, 100% RB, 5 MHz, QPSK, 15 kHz)	5G NR FR1 TDD	8.31	± 9.6 %

Certificate No: EF3-4048_Mar21 Page 19 of 22

This report shall not be reproduced except in full, without the written approval of TA Technology (Shanghai) Co., Ltd.

EF3DV3 – SN:4048 March 4, 2021

10784	AAC	5G NR (CP-OFDM, 100% RB, 10 MHz, QPSK, 15 kHz)	5G NR FR1 TDD	8.29	± 9.6 %
10785	AAC	5G NR (CP-OFDM, 100% RB, 15 MHz, QPSK, 15 kHz)	5G NR FR1 TDD	8.40	± 9.6 %
10786	AAC	5G NR (CP-OFDM, 100% RB, 20 MHz, QPSK, 15 kHz)	5G NR FR1 TDD	8.35	± 9.6 %
10787	AAC	5G NR (CP-OFDM, 100% RB, 25 MHz, QPSK, 15 kHz)	5G NR FR1 TDD	8.44	± 9.6 %
10788	AAC	5G NR (CP-OFDM, 100% RB, 30 MHz, QPSK, 15 kHz)	5G NR FR1 TDD	8.39	± 9.6 %
10789	AAC	5G NR (CP-OFDM, 100% RB, 40 MHz, QPSK, 15 kHz)	5G NR FR1 TDD	8.37	± 9.6 %
10790	AAC	5G NR (CP-OFDM, 100% RB, 50 MHz, QPSK, 15 kHz)	5G NR FR1 TDD	8.39	± 9.6 %
10791	AAC	5G NR (CP-OFDM, 1 RB, 5 MHz, QPSK, 30 kHz)	5G NR FR1 TDD	7.83	± 9.6 %
10792	AAC	5G NR (CP-OFDM, 1 RB, 10 MHz, QPSK, 30 kHz)	5G NR FR1 TDD	7.92	± 9.6 %
10793	AAC	5G NR (CP-OFDM, 1 RB, 15 MHz, QPSK, 30 kHz)	5G NR FR1 TDD	7.95	± 9.6 %
10794	AAC	5G NR (CP-OFDM, 1 RB, 20 MHz, QPSK, 30 kHz)	5G NR FR1 TDD	7.82	± 9.6 %
10795	AAC	5G NR (CP-OFDM, 1 RB, 25 MHz, QPSK, 30 kHz)	5G NR FR1 TDD	7.84	± 9.6 %
10796	AAC	5G NR (CP-OFDM, 1 RB, 30 MHz, QPSK, 30 kHz)	5G NR FR1 TDD	7.82	± 9.6 %
10797	AAC	5G NR (CP-OFDM, 1 RB, 40 MHz, QPSK, 30 kHz)	5G NR FR1 TDD	8.01	± 9.6 %
10798	AAC	5G NR (CP-OFDM, 1 RB, 50 MHz, QPSK, 30 kHz)	5G NR FR1 TDD	7.89	± 9.6 %
10799	AAC	5G NR (CP-OFDM, 1 RB, 60 MHz, QPSK, 30 kHz)	5G NR FR1 TDD	7.93	± 9.6 %
10801	AAC	5G NR (CP-OFDM, 1 RB, 80 MHz, QPSK, 30 kHz)	5G NR FR1 TDD	7.89	± 9.6 %
10802	AAC	5G NR (CP-OFDM, 1 RB, 90 MHz, QPSK, 30 kHz)	5G NR FR1 TDD	7.87	± 9.6 %
10803	AAE	5G NR (CP-OFDM, 1 RB, 100 MHz, QPSK, 30 kHz)	5G NR FR1 TDD	7.93	± 9.6 %
10805	AAD	5G NR (CP-OFDM, 50% RB, 10 MHz, QPSK, 30 kHz)	5G NR FR1 TDD	8.34	± 9.6 %
10806	AAD	5G NR (CP-OFDM, 50% RB, 15 MHz, QPSK, 30 kHz)	5G NR FR1 TDD	8.37	± 9.6 %
10809	AAD	5G NR (CP-OFDM, 50% RB, 30 MHz, QPSK, 30 kHz)	5G NR FR1 TDD	8.34	± 9.6 %
10810	AAD	5G NR (CP-OFDM, 50% RB, 40 MHz, QPSK, 30 kHz)	5G NR FR1 TDD	8.34	± 9.6 %
10812	AAD	5G NR (CP-OFDM, 50% RB, 60 MHz, QPSK, 30 kHz)	5G NR FR1 TDD	8.35	± 9.6 %
10817	AAD	5G NR (CP-OFDM, 100% RB, 5 MHz, QPSK, 30 kHz)	5G NR FR1 TDD	8.35	± 9.6 %
10818	AAD	5G NR (CP-OFDM, 100% RB, 10 MHz, QPSK, 30 kHz)	5G NR FR1 TDD	8.34	± 9.6 %
10819	AAD	5G NR (CP-OFDM, 100% RB, 15 MHz, QPSK, 30 kHz)	5G NR FR1 TDD	8.33	± 9.6 %
10820	AAD	5G NR (CP-OFDM, 100% RB, 20 MHz, QPSK, 30 kHz)	5G NR FR1 TDD	8.30	± 9.6 %
10821	AAC	5G NR (CP-OFDM, 100% RB, 25 MHz, QPSK, 30 kHz)	5G NR FR1 TDD	8.41	± 9.6 %
10822	AAD	5G NR (CP-OFDM, 100% RB, 30 MHz, QPSK, 30 kHz)	5G NR FR1 TDD	8.41	± 9.6 %
10823	AAC	5G NR (CP-OFDM, 100% RB, 40 MHz, QPSK, 30 kHz)	5G NR FR1 TDD	8.36	± 9.6 %
10824	AAD	5G NR (CP-OFDM, 100% RB, 50 MHz, QPSK, 30 kHz)	5G NR FR1 TDD	8.39	± 9.6 %
10825	AAD	5G NR (CP-OFDM, 100% RB, 60 MHz, QPSK, 30 kHz)	5G NR FR1 TDD	8.41	± 9.6 %
10827	AAD	5G NR (CP-OFDM, 100% RB, 80 MHz, QPSK, 30 kHz)	5G NR FR1 TDD	8.42	± 9.6 %
10828	AAE	5G NR (CP-OFDM, 100% RB, 90 MHz, QPSK, 30 kHz)	5G NR FR1 TDD	8.43	± 9.6 %
10829	AAD	5G NR (CP-OFDM, 100% RB, 100 MHz, QPSK, 30 kHz)	5G NR FR1 TDD	8.40	± 9.6 %
10830	AAD	5G NR (CP-OFDM, 1 RB, 10 MHz, QPSK, 60 kHz)	5G NR FR1 TDD	7.63	± 9.6 %
10831	AAD	5G NR (CP-OFDM, 1 RB, 15 MHz, QPSK, 60 kHz)	5G NR FR1 TDD	7.73	± 9.6 %
10832	AAD	5G NR (CP-OFDM, 1 RB, 20 MHz, QPSK, 60 kHz)	5G NR FR1 TDD	7.74	± 9.6 %
10833	AAD	5G NR (CP-OFDM, 1 RB, 25 MHz, QPSK, 60 kHz)	5G NR FR1 TDD	7.70	± 9.6 %
10834	AAD	5G NR (CP-OFDM, 1 RB, 30 MHz, QPSK, 60 kHz)	5G NR FR1 TDD	7.75	± 9.6 %
10835	AAD	5G NR (CP-OFDM, 1 RB, 40 MHz, QPSK, 60 kHz)	5G NR FR1 TDD	7.70	± 9.6 %
10836	AAE	5G NR (CP-OFDM, 1 RB, 50 MHz, QPSK, 60 kHz)	5G NR FR1 TDD	7.66	± 9.6 %
10837	AAD	5G NR (CP-OFDM, 1 RB, 60 MHz, QPSK, 60 kHz)	5G NR FR1 TDD	7.68	± 9.6 %
10839	AAD	5G NR (CP-OFDM, 1 RB, 80 MHz, QPSK, 60 kHz)	5G NR FR1 TDD	7.70	± 9.6 %
10840	AAD	5G NR (CP-OFDM, 1 RB, 90 MHz, QPSK, 60 kHz)	5G NR FR1 TDD	7.67	± 9.6 %
10841	AAD	5G NR (CP-OFDM, 1 RB, 100 MHz, QPSK, 60 kHz)	5G NR FR1 TDD	7.71	± 9.6 %
10843	AAD	5G NR (CP-OFDM, 50% RB, 15 MHz, QPSK, 60 kHz)	5G NR FR1 TDD	8.49	± 9.6 %
10844	AAD	5G NR (CP-OFDM, 50% RB, 20 MHz, QPSK, 60 kHz)	5G NR FR1 TDD	8.34	± 9.6 %
10846	AAD	5G NR (CP-OFDM, 50% RB, 30 MHz, QPSK, 60 kHz)	5G NR FR1 TDD	8.41	± 9.6 %
10854	AAD	5G NR (CP-OFDM, 100% RB, 10 MHz, QPSK, 60 kHz)	5G NR FR1 TDD	8.34	± 9.6 %
10855	AAD	5G NR (CP-OFDM, 100% RB, 15 MHz, QPSK, 60 kHz)	5G NR FR1 TDD	8.36	± 9.6 %
10856	AAD	5G NR (CP-OFDM, 100% RB, 20 MHz, QPSK, 60 kHz)	5G NR FR1 TDD	8.37	± 9.6 %
10857	AAD	5G NR (CP-OFDM, 100% RB, 25 MHz, QPSK, 60 kHz)	5G NR FR1 TDD	8.35	± 9.6 %
10858	AAD	5G NR (CP-OFDM, 100% RB, 30 MHz, QPSK, 60 kHz)	5G NR FR1 TDD	8.36	± 9.6 %
10859	AAD	5G NR (CP-OFDM, 100% RB, 40 MHz, QPSK, 60 kHz)	5G NR FR1 TDD	8.34	± 9.6 %

Certificate No: EF3-4048_Mar21 Page 20 of 22

This report shall not be reproduced except in full, without the written approval of TA Technology (Shanghai) Co., Ltd.

EF3DV3 – SN:4048 March 4, 2021

10860	AAD	5G NR (CP-OFDM, 100% RB, 50 MHz, QPSK, 60 kHz)	5G NR FR1 TDD	8.41	± 9.6 %
10861	AAD	5G NR (CP-OFDM, 100% RB, 60 MHz, QPSK, 60 kHz)	5G NR FR1 TDD	8.40	± 9.6 %
10863	AAD	5G NR (CP-OFDM, 100% RB, 80 MHz, QPSK, 60 kHz)	5G NR FR1 TDD	8.41	± 9.6 %
10864	AAE	5G NR (CP-OFDM, 100% RB, 90 MHz, QPSK, 60 kHz)	5G NR FR1 TDD	8.37	± 9.6 %
10865	AAD	5G NR (CP-OFDM, 100% RB, 100 MHz, QPSK, 60 kHz)	5G NR FR1 TDD	8.41	± 9.6 %
10866	AAD	5G NR (DFT-s-OFDM, 1 RB, 100 MHz, QPSK, 30 kHz)	5G NR FR1 TDD	5.68	± 9.6 %
10868	AAD	5G NR (DFT-s-OFDM, 100% RB, 100 MHz, QPSK, 30 kHz)	5G NR FR1 TDD	5.89	± 9.6 %
10869	AAD	5G NR (DFT-s-OFDM, 1 RB, 100 MHz, QPSK, 120 kHz)	5G NR FR2 TDD	5.75	± 9.6 %
10870	AAD	5G NR (DFT-s-OFDM, 100% RB, 100 MHz, QPSK, 120 kHz)	5G NR FR2 TDD	5.86	± 9.6 %
10871	AAD	5G NR (DFT-s-OFDM, 1 RB, 100 MHz, 16QAM, 120 kHz)	5G NR FR2 TDD	5.75	± 9.6 %
10872	AAD	5G NR (DFT-s-OFDM, 100% RB, 100 MHz, 16QAM, 120 kHz)	5G NR FR2 TDD	6.52	± 9.6 %
10873	AAD	5G NR (DFT-s-OFDM, 1 RB, 100 MHz, 64QAM, 120 kHz)	5G NR FR2 TDD	6.61	± 9.6 %
10874	AAD	5G NR (DFT-s-OFDM, 100% RB, 100 MHz, 64QAM, 120 kHz)	5G NR FR2 TDD	6.65	± 9.6 %
10875	AAD	5G NR (CP-OFDM, 1 RB, 100 MHz, QPSK, 120 kHz)	5G NR FR2 TDD	7.78	± 9.6 %
10876	AAD	5G NR (CP-OFDM, 100% RB, 100 MHz, QPSK, 120 kHz)	5G NR FR2 TDD	8.39	± 9.6 %
10877	AAD	5G NR (CP-OFDM, 1 RB, 100 MHz, 16QAM, 120 kHz)	5G NR FR2 TDD	7.95	± 9.6 %
10878	AAD	5G NR (CP-OFDM, 100% RB, 100 MHz, 16QAM, 120 kHz)	5G NR FR2 TDD	8.41	± 9.6 %
10879	AAD	5G NR (CP-OFDM, 1 RB, 100 MHz, 64QAM, 120 kHz)	5G NR FR2 TDD	8.12	± 9.6 %
10880	AAD	5G NR (CP-OFDM, 100% RB, 100 MHz, 64QAM, 120 kHz)	5G NR FR2 TDD	8.38	± 9.6 %
10881	AAD	5G NR (DFT-s-OFDM, 1 RB, 50 MHz, QPSK, 120 kHz)	5G NR FR2 TDD	5.75	± 9.6 %
10882	AAD	5G NR (DFT-s-OFDM, 100% RB, 50 MHz, QPSK, 120 kHz)	5G NR FR2 TDD	5.96	± 9.6 %
10883	AAD	5G NR (DFT-s-OFDM, 1 RB, 50 MHz, 16QAM, 120 kHz)	5G NR FR2 TDD	6.57	± 9.6 %
10884	AAD	5G NR (DFT-s-OFDM, 100% RB, 50 MHz, 16QAM, 120 kHz)	5G NR FR2 TDD	6.53	± 9.6 %
10885	AAD	5G NR (DFT-s-OFDM, 1 RB, 50 MHz, 64QAM, 120 kHz)	5G NR FR2 TDD	6.61	± 9.6 %
10886	AAD	5G NR (DFT-s-OFDM, 100% RB, 50 MHz, 64QAM, 120 kHz)	5G NR FR2 TDD	6.65	± 9.6 %
10887	AAD	5G NR (CP-OFDM, 1 RB, 50 MHz, QPSK, 120 kHz)	5G NR FR2 TDD	7.78	± 9.6 %
10888	AAD	5G NR (CP-OFDM, 100% RB, 50 MHz, QPSK, 120 kHz)	5G NR FR2 TDD	8.35	± 9.6 %
10889	AAD	5G NR (CP-OFDM, 1 RB, 50 MHz, 16QAM, 120 kHz)	5G NR FR2 TDD	8.02	± 9.6 %
10890	AAD	5G NR (CP-OFDM, 100% RB, 50 MHz, 16QAM, 120 kHz)	5G NR FR2 TDD	8.40	± 9.6 %
10891	AAD	5G NR (CP-OFDM, 1 RB, 50 MHz, 64QAM, 120 kHz)	5G NR FR2 TDD	8.13	± 9.6 %
10892	AAD	5G NR (CP-OFDM, 100% RB, 50 MHz, 64QAM, 120 kHz)	5G NR FR2 TDD	8.41	± 9.6 %
10897	AAD	5G NR (DFT-s-OFDM, 1 RB, 5 MHz, QPSK, 30 kHz)	5G NR FR1 TDD	5.66	± 9.6 %
10898	AAD	5G NR (DFT-s-OFDM, 1 RB, 10 MHz, QPSK, 30 kHz)	5G NR FR1 TDD	5.67	± 9.6 %
10899	AAD	5G NR (DFT-s-OFDM, 1 RB, 15 MHz, QPSK, 30 kHz)	5G NR FR1 TDD	5.67	± 9.6 %
10900	AAD	5G NR (DFT-s-OFDM, 1 RB, 20 MHz, QPSK, 30 kHz)	5G NR FR1 TDD	5.68	± 9.6 %
10901	AAD	5G NR (DFT-s-OFDM, 1 RB, 25 MHz, QPSK, 30 kHz)	5G NR FR1 TDD	5.68	± 9.6 %
10902	AAD	5G NR (DFT-s-OFDM, 1 RB, 30 MHz, QPSK, 30 kHz)	5G NR FR1 TDD	5.68	± 9.6 %
10903	AAD	5G NR (DFT-s-OFDM, 1 RB, 40 MHz, QPSK, 30 kHz)	5G NR FR1 TDD	5.68	± 9.6 %
10904	AAD	5G NR (DFT-s-OFDM, 1 RB, 50 MHz, QPSK, 30 kHz)	5G NR FR1 TDD	5.68	± 9.6 %
10905	AAD	5G NR (DFT-s-OFDM, 1 RB, 60 MHz, QPSK, 30 kHz)	5G NR FR1 TDD	5.68	± 9.6 %
10906	AAD	5G NR (DFT-s-OFDM, 1 RB, 80 MHz, QPSK, 30 kHz)	5G NR FR1 TDD	5.68	± 9.6 %
10907	AAD	5G NR (DFT-s-OFDM, 50% RB, 5 MHz, QPSK, 30 kHz)	5G NR FR1 TDD	5.78	± 9.6 %
10908	AAD	5G NR (DFT-s-OFDM, 50% RB, 10 MHz, QPSK, 30 kHz)	5G NR FR1 TDD	5.93	± 9.6 %
10909	AAD	5G NR (DFT-s-OFDM, 50% RB, 15 MHz, QPSK, 30 kHz)	5G NR FR1 TDD	5.96	± 9.6 %
10910	AAD	5G NR (DFT-s-OFDM, 50% RB, 20 MHz, QPSK, 30 kHz)	5G NR FR1 TDD	5.83	± 9.6 %
10911	AAD	5G NR (DFT-s-OFDM, 50% RB, 25 MHz, QPSK, 30 kHz)	5G NR FR1 TDD	5.93	± 9.6 %
10912	AAD	5G NR (DFT-s-OFDM, 50% RB, 30 MHz, QPSK, 30 kHz)	5G NR FR1 TDD	5.84	± 9.6 %
10913	AAD	5G NR (DFT-s-OFDM, 50% RB, 40 MHz, QPSK, 30 kHz)	5G NR FR1 TDD	5.84	± 9.6 %
10914	AAD	5G NR (DFT-s-OFDM, 50% RB, 50 MHz, QPSK, 30 kHz)	5G NR FR1 TDD	5.85	± 9.6 %
10915	AAD	5G NR (DFT-s-OFDM, 50% RB, 60 MHz, QPSK, 30 kHz)	5G NR FR1 TDD	5.83	± 9.6 %
10916	AAD	5G NR (DFT-s-OFDM, 50% RB, 80 MHz, QPSK, 30 kHz)	5G NR FR1 TDD	5.87	± 9.6 %
10917	AAD	5G NR (DFT-s-OFDM, 50% RB, 100 MHz, QPSK, 30 kHz)	5G NR FR1 TDD	5.94	± 9.6 %
10918	AAD	5G NR (DFT-s-OFDM, 100% RB, 5 MHz, QPSK, 30 kHz)	5G NR FR1 TDD	5.86	± 9.6 %
10919	AAD	5G NR (DFT-s-OFDM, 100% RB, 10 MHz, QPSK, 30 kHz)	5G NR FR1 TDD	5.86	± 9.6 %
10920	AAD	5G NR (DFT-s-OFDM, 100% RB, 15 MHz, QPSK, 30 kHz)	5G NR FR1 TDD	5.87	± 9.6 %
10921	AAD	5G NR (DFT-s-OFDM, 100% RB, 20 MHz, QPSK, 30 kHz)	5G NR FR1 TDD	5.84	± 9.6 %

Certificate No: EF3-4048_Mar21 Page 21 of 22

This report shall not be reproduced except in full, without the written approval of TA Technology (Shanghai) Co., Ltd.

EF3DV3 – SN:4048 March 4, 2021

10922	AAD	5G NR (DFT-s-OFDM, 100% RB, 25 MHz, QPSK, 30 kHz)	5G NR FR1 TDD	5.82	± 9.6 %
10923	AAD	5G NR (DFT-s-OFDM, 100% RB, 30 MHz, QPSK, 30 kHz)	5G NR FR1 TDD	5.84	± 9.6 %
10924	AAD	5G NR (DFT-s-OFDM, 100% RB, 40 MHz, QPSK, 30 kHz)	5G NR FR1 TDD	5.84	± 9.6 %
10925	AAD	5G NR (DFT-s-OFDM, 100% RB, 50 MHz, QPSK, 30 kHz)	5G NR FR1 TDD	5.95	± 9.6 %
10926	AAD	5G NR (DFT-s-OFDM, 100% RB, 60 MHz, QPSK, 30 kHz)	5G NR FR1 TDD	5.84	± 9.6 %
10927	AAD	5G NR (DFT-s-OFDM, 100% RB, 80 MHz, QPSK, 30 kHz)	5G NR FR1 TDD	5.94	± 9.6 %
10928	AAD	5G NR (DFT-s-OFDM, 1 RB, 5 MHz, QPSK, 15 kHz)	5G NR FR1 FDD	5.52	± 9.6 %
10929	AAD	5G NR (DFT-s-OFDM, 1 RB, 10 MHz, QPSK, 15 kHz)	5G NR FR1 FDD	5.52	± 9.6 %
10930	AAD	5G NR (DFT-s-OFDM, 1 RB, 15 MHz, QPSK, 15 kHz)	5G NR FR1 FDD	5.52	± 9.6 %
10931	AAD	5G NR (DFT-s-OFDM, 1 RB, 20 MHz, QPSK, 15 kHz)	5G NR FR1 FDD	5.51	± 9.6 %
10932	AAB	5G NR (DFT-s-OFDM, 1 RB, 25 MHz, QPSK, 15 kHz)	5G NR FR1 FDD	5.51	± 9.6 %
10933	AAA	5G NR (DFT-s-OFDM, 1 RB, 30 MHz, QPSK, 15 kHz)	5G NR FR1 FDD	5.51	± 9.6 %
10934	AAA	5G NR (DFT-s-OFDM, 1 RB, 40 MHz, QPSK, 15 kHz)	5G NR FR1 FDD	5.51	± 9.6 %
10935	AAA	5G NR (DFT-s-OFDM, 1 RB, 50 MHz, QPSK, 15 kHz)	5G NR FR1 FDD	5.51	± 9.6 %
10936	AAC	5G NR (DFT-s-OFDM, 50% RB, 5 MHz, QPSK, 15 kHz)	5G NR FR1 FDD	5.90	± 9.6 %
10937	AAB	5G NR (DFT-s-OFDM, 50% RB, 10 MHz, QPSK, 15 kHz)	5G NR FR1 FDD	5.77	± 9.6 %
10938	AAB	5G NR (DFT-s-OFDM, 50% RB, 15 MHz, QPSK, 15 kHz)	5G NR FR1 FDD	5.90	± 9.6 %
10939	AAB	5G NR (DFT-s-OFDM, 50% RB, 20 MHz, QPSK, 15 kHz)	5G NR FR1 FDD	5.82	± 9.6 %
10940	AAB	5G NR (DFT-s-OFDM, 50% RB, 25 MHz, QPSK, 15 kHz)	5G NR FR1 FDD	5.89	± 9.6 %
10941	AAB	5G NR (DFT-s-OFDM, 50% RB, 30 MHz, QPSK, 15 kHz)	5G NR FR1 FDD	5.83	± 9.6 %
10942	AAB	5G NR (DFT-s-OFDM, 50% RB, 40 MHz, QPSK, 15 kHz)	5G NR FR1 FDD	5.85	± 9.6 %
10943	AAB	5G NR (DFT-s-OFDM, 50% RB, 50 MHz, QPSK, 15 kHz)	5G NR FR1 FDD	5.95	± 9.6 %
10944	AAB	5G NR (DFT-s-OFDM, 100% RB, 5 MHz, QPSK, 15 kHz)	5G NR FR1 FDD	5.81	± 9.6 %
10945	AAB	5G NR (DFT-s-OFDM, 100% RB, 10 MHz, QPSK, 15 kHz)	5G NR FR1 FDD	5.85	± 9.6 %
10946	AAC	5G NR (DFT-s-OFDM, 100% RB, 15 MHz, QPSK, 15 kHz)	5G NR FR1 FDD	5.83	± 9.6 %
10947	AAB	5G NR (DFT-s-OFDM, 100% RB, 20 MHz, QPSK, 15 kHz)	5G NR FR1 FDD	5.87	± 9.6 %
10948	AAB	5G NR (DFT-s-OFDM, 100% RB, 25 MHz, QPSK, 15 kHz)	5G NR FR1 FDD	5.94	± 9.6 %
10949	AAB	5G NR (DFT-s-OFDM, 100% RB, 30 MHz, QPSK, 15 kHz)	5G NR FR1 FDD	5.87	± 9.6 %
10950	AAB	5G NR (DFT-s-OFDM, 100% RB, 40 MHz, QPSK, 15 kHz)	5G NR FR1 FDD	5.94	± 9.6 %
10951	AAB	5G NR (DFT-s-OFDM, 100% RB, 50 MHz, QPSK, 15 kHz)	5G NR FR1 FDD	5.92	± 9.6 %
10952	AAB	5G NR DL (CP-OFDM, TM 3.1, 5 MHz, 64-QAM, 15 kHz)	5G NR FR1 FDD	8.25	± 9.6 %
10953	AAB	5G NR DL (CP-OFDM, TM 3.1, 10 MHz, 64-QAM, 15 kHz)	5G NR FR1 FDD	8.15	± 9.6 %
10954	AAB	5G NR DL (CP-OFDM, TM 3.1, 15 MHz, 64-QAM, 15 kHz)	5G NR FR1 FDD	8.23	± 9.6 %
10955	AAB	5G NR DL (CP-OFDM, TM 3.1, 20 MHz, 64-QAM, 15 kHz)	5G NR FR1 FDD	8.42	± 9.6 %
10956	AAB	5G NR DL (CP-OFDM, TM 3.1, 5 MHz, 64-QAM, 30 kHz)	5G NR FR1 FDD	8.14	± 9.6 %
10957	AAC	5G NR DL (CP-OFDM, TM 3.1, 10 MHz, 64-QAM, 30 kHz)	5G NR FR1 FDD	8.31	± 9.6 %
10958	AAB	5G NR DL (CP-OFDM, TM 3.1, 15 MHz, 64-QAM, 30 kHz)	5G NR FR1 FDD	8.61	± 9.6 %
10959	AAB	5G NR DL (CP-OFDM, TM 3.1, 20 MHz, 64-QAM, 30 kHz)	5G NR FR1 FDD	8.33	± 9.6 %
10960	AAB	5G NR DL (CP-OFDM, TM 3.1, 5 MHz, 64-QAM, 15 kHz)	5G NR FR1 TDD	9.32	± 9.6 %
10961	AAB	5G NR DL (CP-OFDM, TM 3.1, 10 MHz, 64-QAM, 15 kHz)	5G NR FR1 TDD	9.36	± 9.6 %
10962	AAB	5G NR DL (CP-OFDM, TM 3.1, 15 MHz, 64-QAM, 15 kHz)	5G NR FR1 TDD	9.40	± 9.6 %
10963	AAB	5G NR DL (CP-OFDM, TM 3.1, 20 MHz, 64-QAM, 15 kHz)	5G NR FR1 TDD	9.55	± 9.6 %
10964	AAB	5G NR DL (CP-OFDM, TM 3.1, 5 MHz, 64-QAM, 30 kHz)	5G NR FR1 TDD	9.29	± 9.6 %
10965	AAB	5G NR DL (CP-OFDM, TM 3.1, 10 MHz, 64-QAM, 30 kHz)	5G NR FR1 TDD	9.37	± 9.6 %
10966	AAB	5G NR DL (CP-OFDM, TM 3.1, 15 MHz, 64-QAM, 30 kHz)	5G NR FR1 TDD	9.55	± 9.6 %
10967	AAB	5G NR DL (CP-OFDM, TM 3.1, 20 MHz, 64-QAM, 30 kHz)	5G NR FR1 TDD	9.42	± 9.6 %
10968	AAB	5G NR DL (CP-OFDM, TM 3.1, 100 MHz, 64-QAM, 30 kHz)	5G NR FR1 TDD	9.49	± 9.6 %
10972	AAB	5G NR (CP-OFDM, 1 RB, 20 MHz, QPSK, 15 kHz)	5G NR FR1 TDD	11.59	± 9.6 %
10973	AAB	5G NR (DFT-s-OFDM, 1 RB, 100 MHz, QPSK, 30 kHz)	5G NR FR1 TDD	9.06	± 9.6 %
10974	AAB	5G NR (CP-OFDM, 100% RB, 100 MHz, 256-QAM, 30 kHz)	5G NR FR1 TDD	10.28	± 9.6 %

[E] Uncertainty is determined using the max. deviation from linear response applying rectangular distribution and is expressed for the square of the field value.

Certificate No: EF3-4048_Mar21 Page 22 of 22

This report shall not be reproduced except in full, without the written approval of TA Technology (Shanghai) Co., Ltd.

ANNEX D: CD2600V3 Dipole Calibration Certificate

Calibration Laboratory of
Schmid & Partner
Engineering AG
Zeughausstrasse 43, 8004 Zurich, Switzerland

S Schweizerischer Kalibrierdienst
C Service suisse d'étalonnage
S Servizio svizzero di taratura
Swiss Calibration Service

Accredited by the Swiss Accreditation Service (SAS)
The Swiss Accreditation Service is one of the signatories to the EA Multilateral Agreement for the recognition of calibration certificates

Accreditation No.: **SCS 0108**

Client **TA-SH (Auden)**

Certificate No: **CD2600V3-1016_Jan21**

CALIBRATION CERTIFICATE

Object	CD2600V3 - SN: 1016
Calibration procedure(s)	QA CAL-20.v7 Calibration Procedure for Validation Sources in air
Calibration date:	January 18, 2021

This calibration certificate documents the traceability to national standards, which realize the physical units of measurements (SI).
The measurements and the uncertainties with confidence probability are given on the following pages and are part of the certificate.

All calibrations have been conducted in the closed laboratory facility: environment temperature (22 ± 3)°C and humidity < 70%.

Calibration Equipment used (M&TE critical for calibration)

Primary Standards	ID #	Cal Date (Certificate No.)	Scheduled Calibration
Power meter NRP	SN: 104778	01-Apr-20 (No. 217-03100/03101)	Apr-21
Power sensor NRP-Z91	SN: 103244	01-Apr-20 (No. 217-03100)	Apr-21
Power sensor NRP-Z91	SN: 103245	01-Apr-20 (No. 217-03101)	Apr-21
Reference 20 dB Attenuator	SN: BH9394 (20k)	31-Mar-20 (No. 217-03106)	Apr-21
Type-N mismatch combination	SN: 310982 / 06327	31-Mar-20 (No. 217-03104)	Apr-21
Probe EF3DV3	SN: 4013	28-Dec-20 (No. EF3-4013_Dec20)	Dec-21
DAE4	SN: 781	23-Dec-20 (No. DAE4-781_Dec20)	Dec-21

Secondary Standards	ID #	Check Date (in house)	Scheduled Check
Power meter Agilent 4419B	SN: GB42420191	09-Oct-09 (in house check Oct-20)	In house check: Oct-23
Power sensor HP E4412A	SN: US38485102	05-Jan-10 (in house check Oct-20)	In house check: Oct-23
Power sensor HP 8482A	SN: US37295597	09-Oct-09 (in house check Oct-20)	In house check: Oct-23
RF generator R&S SMT-06	SN: 837633/005	10-Jan-19 (in house check Oct-20)	In house check: Oct-23
Network Analyzer Agilent E8358A	SN: US41080477	31-Mar-14 (in house check Oct-20)	In house check: Oct-21

	Name	Function	Signature
Calibrated by:	Leif Klysner	Laboratory Technician	
Approved by:	Katja Pokovic	Technical Manager	

Issued: January 19, 2021

This calibration certificate shall not be reproduced except in full without written approval of the laboratory.

Certificate No: CD2600V3-1016_Jan21 Page 1 of 5

This report shall not be reproduced except in full, without the written approval of TA Technology (Shanghai) Co., Ltd.

Calibration Laboratory of
Schmid & Partner
Engineering AG
Zeughausstrasse 43, 8004 Zurich, Switzerland

S Schweizerischer Kalibrierdienst
C Service suisse d'étalonnage
S Servizio svizzero di taratura
Swiss Calibration Service

Accredited by the Swiss Accreditation Service (SAS)
The Swiss Accreditation Service is one of the signatories to the EA Multilateral Agreement for the recognition of calibration certificates

Accreditation No.: **SCS 0108**

References

[1] ANSI-C63.19-2011
American National Standard, Methods of Measurement of Compatibility between Wireless Communications Devices and Hearing Aids.

Methods Applied and Interpretation of Parameters:

- *Coordinate System:* y-axis is in the direction of the dipole arms. z-axis is from the basis of the antenna (mounted on the table) towards its feed point between the two dipole arms. x-axis is normal to the other axes. In coincidence with the standards [1], the measurement planes (probe sensor center) are selected to be at a distance of 15 mm above the top metal edge of the dipole arms.
- *Measurement Conditions:* Further details are available from the hardcopies at the end of the certificate. All figures stated in the certificate are valid at the frequency indicated. The forward power to the dipole connector is set with a calibrated power meter connected and monitored with an auxiliary power meter connected to a directional coupler. While the dipole under test is connected, the forward power is adjusted to the same level.
- *Antenna Positioning:* The dipole is mounted on a HAC Test Arch phantom using the matching dipole positioner with the arms horizontal and the feeding cable coming from the floor. The measurements are performed in a shielded room with absorbers around the setup to reduce the reflections.
  It is verified before the mounting of the dipole under the Test Arch phantom, that its arms are perfectly in a line. It is installed on the HAC dipole positioner with its arms parallel below the dielectric reference wire and able to move elastically in vertical direction without changing its relative position to the top center of the Test Arch phantom. The vertical distance to the probe is adjusted after dipole mounting with a DASY5 Surface Check job. Before the measurement, the distance between phantom surface and probe tip is verified. The proper measurement distance is selected by choosing the matching section of the HAC Test Arch phantom with the proper device reference point (upper surface of the dipole) and the matching grid reference point (tip of the probe) considering the probe sensor offset. The vertical distance to the probe is essential for the accuracy.
- *Feed Point Impedance and Return Loss:* These parameters are measured using a Vector Network Analyzer. The impedance is specified at the SMA connector of the dipole. The influence of reflections was eliminating by applying the averaging function while moving the dipole in the air, at least 70cm away from any obstacles.
- *E-field distribution:* E field is measured in the x-y-plane with an isotropic E-field probe with 100 mW forward power to the antenna feed point. In accordance with [1], the scan area is 20mm wide, its length exceeds the dipole arm length (180 or 90mm). The sensor center is 15 mm (in z) above the metal top of the dipole arms. Two 3D maxima are available near the end of the dipole arms. Assuming the dipole arms are perfectly in one line, the average of these two maxima (in subgrid 2 and subgrid 8) is determined to compensate for any non-parallelity to the measurement plane as well as the sensor displacement. The E-field value stated as calibration value represents the maximum of the interpolated 3D-E-field, in the plane above the dipole surface.

The reported uncertainty of measurement is stated as the standard uncertainty of measurement multiplied by the coverage factor k=2, which for a normal distribution corresponds to a coverage probability of approximately 95%.

This report shall not be reproduced except in full, without the written approval of TA Technology (Shanghai) Co., Ltd.

Measurement Conditions

DASY system configuration, as far as not given on page 1.

DASY Version	DASY5	V52.10.4
Phantom	HAC Test Arch	
Distance Dipole Top - Probe Center	15 mm	
Scan resolution	dx, dy = 5 mm	
Frequency	2600 MHz ± 1 MHz	
Input power drift	< 0.05 dB	

Maximum Field values at 2600 MHz

E-field 15 mm above dipole surface	condition	**Interpolated maximum**
Maximum measured above high end	100 mW input power	86.7 V/m = 38.76 dBV/m
Maximum measured above low end	100 mW input power	85.7 V/m = 38.66 dBV/m
Averaged maximum above arm	100 mW input power	**86.2 V/m ± 12.8 % (k=2)**

Appendix (Additional assessments outside the scope of SCS 0108)

Antenna Parameters

Frequency	**Return Loss**	**Impedance**
2450 MHz	20.9 dB	43.5 Ω - 5.3 jΩ
2550 MHz	30.8 dB	48.5 Ω + 2.4 jΩ
2600 MHz	35.9 dB	50.9 Ω + 1.4 jΩ
2650 MHz	35.8 dB	51.6 Ω - 0.1 jΩ
2750 MHz	22.5 dB	48.8 Ω - 7.4 jΩ

3.2 Antenna Design and Handling

The calibration dipole has a symmetric geometry with a built-in two stub matching network, which leads to the enhanced bandwidth.
The dipole is built of standard semirigid coaxial cable. The internal matching line is open ended. The antenna is therefore open for DC signals.
Do not apply force to dipole arms, as they are liable to bend. The soldered connections near the feedpoint may be damaged. After excessive mechanical stress or overheating, check the impedance characteristics to ensure that the internal matching network is not affected.

After long term use with 40W radiated power, only a slight warming of the dipole near the feedpoint can be measured.

This report shall not be reproduced except in full, without the written approval of TA Technology (Shanghai) Co., Ltd.

Impedance Measurement Plot

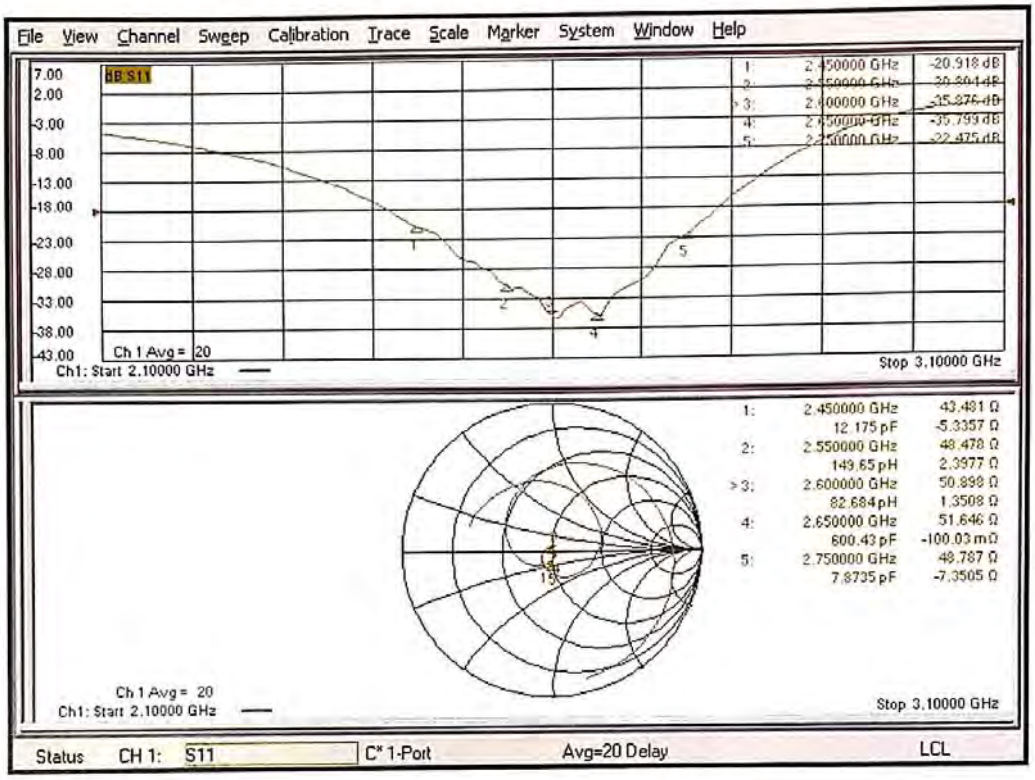

This report shall not be reproduced except in full, without the written approval of TA Technology (Shanghai) Co., Ltd.

DASY5 E-field Result

Date: 18.01.2021

Test Laboratory: SPEAG Lab2

DUT: HAC Dipole 2600 MHz; Type: CD2600V3; Serial: CD2600V3 - SN: 1016

Communication System: UID 0 - CW ; Frequency: 2600 MHz
Medium parameters used: $\sigma = 0$ S/m, $\varepsilon_r = 1$; $\rho = 0$ kg/m^3
Phantom section: RF Section
Measurement Standard: DASY5 (IEEE/IEC/ANSI C63.19-2011)

DASY52 Configuration:

- Probe: EF3DV3 - SN4013; ConvF(1, 1, 1) @ 2600 MHz; Calibrated: 28.12.2020
- Sensor-Surface: (Fix Surface)
- Electronics: DAE4 Sn781; Calibrated: 23.12.2020
- Phantom: HAC Test Arch with AMCC; Type: SD HAC P01 BA; Serial: 1070
- DASY52 52.10.4(1527); SEMCAD X 14.6.14(7483)

Dipole E-Field measurement @ 2600MHz/E-Scan - 2600MHz d=15mm/Hearing Aid Compatibility Test (41x181x1):
Interpolated grid: dx=0.5000 mm, dy=0.5000 mm
Device Reference Point: 0, 0, -6.3 mm
Reference Value = 69.15 V/m; Power Drift = -0.01 dB
Applied MIF = 0.00 dB
RF audio interference level = 38.76 dBV/m
Emission category: M2

MIF scaled E-field

Grid 1 M2 38.51 dBV/m	Grid 2 M2 38.66 dBV/m	Grid 3 M2 38.46 dBV/m
Grid 4 M2 38.01 dBV/m	Grid 5 M2 38.05 dBV/m	Grid 6 M2 37.87 dBV/m
Grid 7 M2 38.68 dBV/m	Grid 8 M2 38.76 dBV/m	Grid 9 M2 38.5 dBV/m

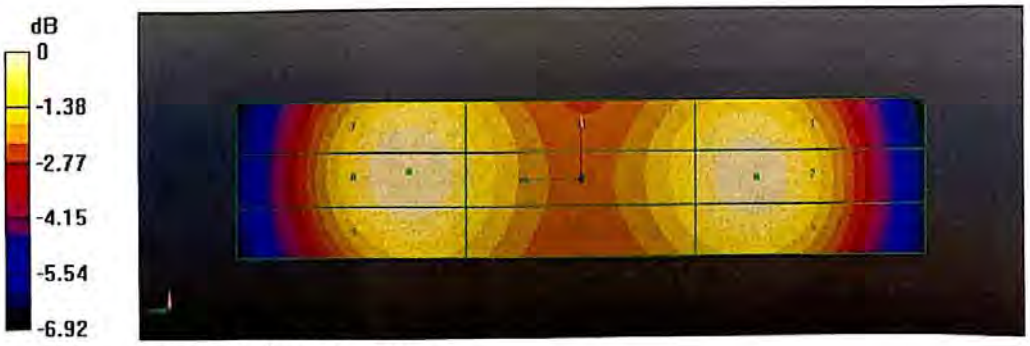

0 dB = 86.73 V/m = 38.76 dBV/m

This report shall not be reproduced except in full, without the written approval of TA Technology (Shanghai) Co., Ltd.

ANNEX E: DAE4 Calibration Certificate

Calibration Laboratory of
Schmid & Partner
Engineering AG
Zeughausstrasse 43, 8004 Zurich, Switzerland

S Schweizerischer Kalibrierdienst
C Service suisse d'étalonnage
Servizio svizzero di taratura
S Swiss Calibration Service

Accredited by the Swiss Accreditation Service (SAS)
The Swiss Accreditation Service is one of the signatories to the EA Multilateral Agreement for the recognition of calibration certificates

Accreditation No.: SCS 0108

Client **TA-SH (Auden)** **Certificate No: DAE4-1648_May21**

CALIBRATION CERTIFICATE

Object	DAE4 - SD 000 D04 BO - SN: 1648
Calibration procedure(s)	QA CAL-06.v30 Calibration procedure for the data acquisition electronics (DAE)
Calibration date:	May 17, 2021

This calibration certificate documents the traceability to national standards, which realize the physical units of measurements (SI).
The measurements and the uncertainties with confidence probability are given on the following pages and are part of the certificate.

All calibrations have been conducted in the closed laboratory facility: environment temperature (22 ± 3)°C and humidity < 70%.

Calibration Equipment used (M&TE critical for calibration)

Primary Standards	ID #	Cal Date (Certificate No.)	Scheduled Calibration
Keithley Multimeter Type 2001	SN: 0810278	07-Sep-20 (No:28647)	Sep-21
Secondary Standards	**ID #**	**Check Date (in house)**	**Scheduled Check**
Auto DAE Calibration Unit	SE UWS 053 AA 1001	07-Jan-21 (in house check)	In house check: Jan-22
Calibrator Box V2.1	SE UMS 006 AA 1002	07-Jan-21 (in house check)	In house check: Jan-22

	Name	Function	Signature
Calibrated by:	Eric Hainfeld	Laboratory Technician	
Approved by:	Sven Kühn	Deputy Manager	

Issued: May 17, 2021

This calibration certificate shall not be reproduced except in full without written approval of the laboratory.

Certificate No: DAE4-1648_May21 Page 1 of 5

This report shall not be reproduced except in full, without the written approval of TA Technology (Shanghai) Co., Ltd.

Calibration Laboratory of
Schmid & Partner
Engineering AG
Zeughausstrasse 43, 8004 Zurich, Switzerland

S Schweizerischer Kalibrierdienst
C Service suisse d'étalonnage
Servizio svizzero di taratura
S Swiss Calibration Service

Accredited by the Swiss Accreditation Service (SAS)
The Swiss Accreditation Service is one of the signatories to the EA Multilateral Agreement for the recognition of calibration certificates

Accreditation No.: SCS 0108

Glossary

DAE	data acquisition electronics
Connector angle	information used in DASY system to align probe sensor X to the robot coordinate system.

Methods Applied and Interpretation of Parameters

- *DC Voltage Measurement:* Calibration Factor assessed for use in DASY system by comparison with a calibrated instrument traceable to national standards. The figure given corresponds to the full scale range of the voltmeter in the respective range.
- *Connector angle*: The angle of the connector is assessed measuring the angle mechanically by a tool inserted. Uncertainty is not required.
- The following parameters as documented in the Appendix contain technical information as a result from the performance test and require no uncertainty.
  - *DC Voltage Measurement Linearity:* Verification of the Linearity at +10% and -10% of the nominal calibration voltage. Influence of offset voltage is included in this measurement.
  - *Common mode sensitivity:* Influence of a positive or negative common mode voltage on the differential measurement.
  - *Channel separation:* Influence of a voltage on the neighbor channels not subject to an input voltage.
  - *AD Converter Values with inputs shorted:* Values on the internal AD converter corresponding to zero input voltage
  - *Input Offset Measurement:* Output voltage and statistical results over a large number of zero voltage measurements.
  - *Input Offset Current:* Typical value for information; Maximum channel input offset current, not considering the input resistance.
  - *Input resistance:* Typical value for information: DAE input resistance at the connector, during internal auto-zeroing and during measurement.
  - *Low Battery Alarm Voltage:* Typical value for information. Below this voltage, a battery alarm signal is generated.
  - *Power consumption:* Typical value for information. Supply currents in various operating modes.

This report shall not be reproduced except in full, without the written approval of TA Technology (Shanghai) Co., Ltd.

DC Voltage Measurement

A/D - Converter Resolution nominal

High Range: 1LSB = 6.1μV , full range = -100...+300 mV

Low Range: 1LSB = 61nV , full range = -1.....+3mV

DASY measurement parameters: Auto Zero Time: 3 sec; Measuring time: 3 sec

Calibration Factors	X	Y	Z
High Range	404.614 ± 0.02% (k=2)	404.114 ± 0.02% (k=2)	404.720 ± 0.02% (k=2)
Low Range	3.97861 ± 1.50% (k=2)	3.96109 ± 1.50% (k=2)	3.96677 ± 1.50% (k=2)

Connector Angle

Connector Angle to be used in DASY system	85.5 ° ± 1 °

Certificate No: DAE4-1648_May21 Page 3 of 5

This report shall not be reproduced except in full, without the written approval of TA Technology (Shanghai) Co., Ltd.

Appendix (Additional assessments outside the scope of SCS0108)

1. DC Voltage Linearity

High Range		Reading (μV)	Difference (μV)	Error (%)
Channel X	+ Input	200028.04	-2.38	-0.00
Channel X	+ Input	20005.54	0.45	0.00
Channel X	- Input	-20003.97	1.16	-0.01
Channel Y	+ Input	200029.27	-1.40	-0.00
Channel Y	+ Input	20003.19	-1.81	-0.01
Channel Y	- Input	-20007.57	-2.28	0.01
Channel Z	+ Input	200027.91	-2.31	-0.00
Channel Z	+ Input	20003.29	-1.60	-0.01
Channel Z	- Input	-20006.93	-1.60	0.01

Low Range		Reading (μV)	Difference (μV)	Error (%)
Channel X	+ Input	2001.22	-0.04	-0.00
Channel X	+ Input	201.07	-0.06	-0.03
Channel X	- Input	-198.89	-0.05	0.03
Channel Y	+ Input	2001.16	0.02	0.00
Channel Y	+ Input	199.98	-1.02	-0.51
Channel Y	- Input	-200.02	-1.09	0.55
Channel Z	+ Input	2001.00	-0.14	-0.01
Channel Z	+ Input	199.91	-1.16	-0.58
Channel Z	- Input	-200.24	-1.25	0.63

2. Common mode sensitivity

DASY measurement parameters: Auto Zero Time: 3 sec; Measuring time: 3 sec

	Common mode Input Voltage (mV)	High Range Average Reading (μV)	Low Range Average Reading (μV)
Channel X	200	-2.69	-4.88
	- 200	5.12	3.63
Channel Y	200	1.53	1.30
	- 200	-2.71	-3.54
Channel Z	200	4.47	4.60
	- 200	-7.08	-6.79

3. Channel separation

DASY measurement parameters: Auto Zero Time: 3 sec; Measuring time: 3 sec

	Input Voltage (mV)	Channel X (μV)	Channel Y (μV)	Channel Z (μV)
Channel X	200	-	-0.77	-4.03
Channel Y	200	5.85	-	1.12
Channel Z	200	9.86	3.76	-

This report shall not be reproduced except in full, without the written approval of TA Technology (Shanghai) Co., Ltd.

4. AD-Converter Values with inputs shorted

DASY measurement parameters: Auto Zero Time: 3 sec; Measuring time: 3 sec

	High Range (LSB)	Low Range (LSB)
Channel X	16032	14241
Channel Y	15926	16185
Channel Z	16183	17314

5. Input Offset Measurement

DASY measurement parameters: Auto Zero Time: 3 sec; Measuring time: 3 sec
Input 10MΩ

	Average (μV)	min. Offset (μV)	max. Offset (μV)	Std. Deviation (μV)
Channel X	-0.43	-1.44	1.89	0.42
Channel Y	-0.59	-1.57	0.75	0.39
Channel Z	-0.66	-1.93	0.34	0.36

6. Input Offset Current

Nominal Input circuitry offset current on all channels: <25fA

7. Input Resistance (Typical values for information)

	Zeroing (kOhm)	Measuring (MOhm)
Channel X	200	200
Channel Y	200	200
Channel Z	200	200

8. Low Battery Alarm Voltage (Typical values for information)

Typical values	Alarm Level (VDC)
Supply (+ Vcc)	+7.9
Supply (- Vcc)	-7.6

9. Power Consumption (Typical values for information)

Typical values	Switched off (mA)	Stand by (mA)	Transmitting (mA)
Supply (+ Vcc)	+0.01	+6	+14
Supply (- Vcc)	–0.01	-8	-9

This report shall not be reproduced except in full, without the written approval of TA Technology (Shanghai) Co., Ltd.

ANNEX F: The EUT Appearances

The EUT Appearance is submitted separately.

This report shall not be reproduced except in full, without the written approval of TA Technology (Shanghai) Co., Ltd.

ANNEX G: Test Setup Photos

The Test Setup Photos is submitted separately.

This report shall not be reproduced except in full, without the written approval of TA Technology (Shanghai) Co., Ltd.