Welink Your Smart

Hardware Development Guide of Module Product

ZM8620_V2

Version 2.3, 2014-04-15

Legal Information

By receiving the document from Shenzhen ZTEWelink Technology Co., Ltd (shortly referred to as ZTEWelink), you are deemed to have agreed to the following terms. If you don't agree to the following terms, please stop using the document.

Copyright © 2013 Shenzhen ZTEWelink Technology Co., Ltd. All rights reserved. The document contains ZTEWelink's proprietary information. Without the prior written permission of ZTEWelink, no entity or individual is allowed to reproduce, transfer, distribute, use and disclose this document or any image, table, data or other information contained in this document.

As the wholly-owned subsidiaries of ZTE, ZTEWelink is the professional company engaging in R&D, manufacture and sales of wireless module product. ZTEWelink is the registered trademark of ZTEWelink. The name and logo of ZTEWelink are ZTEWelink's trademark or registered trademark. Meanwhile, ZTEWelink is a wholly-owned subsidiary of ZTE Corporation, and is granted to use ZTE Corporation's registered trademark. The other products or company names mentioned in this document are the trademark or registered trademark of their respective owner. Without the prior written permission of ZTEWelink or the third-party oblige, no one is allowed to read this document.

The product meets the design requirements of environmental protection and personal security. The storage, use or disposal of products should abide by the product manual, relevant contract or the laws and regulations of relevant country.

ZTEWelink reserves the right to make modifications on the product described in this document without prior notice, and keeps the right to revise or retrieve the document any time.

If you have any question about the manual, please consult the company or its distributors promptly.

Applicability Table

Product
ZM8620_V2EUD
ZM8620_V2LAT

All Rights reserved, No Spreading abroad without Permission of ZTEWelink

Revision History

Version	Date	Description
V1.0	2013-02-22	First published
V2.0	2013-03-20	Delete the part of 4.8 in the former version, and change the header, front cover, legal information and footer.
V2.1	2013-08-16	1. Modify the legal information 2. Modify the part of 7.1.1 3. Modify the format of footer and header 4. Modify the figure of PIN Configuration Diagram 5. Add the figure of PIN Distribution Diagram 6. Add chapter 8 of Debugging Environment and Method 7. Modify chapter 7 of Antenna
	2013-09-30	8. Modify the typical voltage of power supply to 3.8V 9. Add the support of WinCE OS 10. Update the Product Material Object Picture of Figure 2-1 11. Modify the support of GPRS Class B in Table 2-1 12. Modify the Specification of SIM interface in Table 2-1 13. Modify the pin NO. of USIM in Table 4-4 14. Modify the Figure of (U)SIM Card Signal Connection Circuit 15. Modify the support of MMS, RAS, phonebook, network lock, and USSD in Table 2-1 16. Add the Figure 4-4 of Module Serial Port & AP Application Processor 17. Add the Table 4-6 of Definition of UART Signal 18. Add 4.10 of W_DISABLE_N Signal 19. Modify chapter 5.3 of Resetting Flow 20. Delete the part of Power_on/Power_off in chapter 5.2 and chapter 4.8 21. Add Table 5-3 of Power-on/Resetting Period 22. Complete and modify Table 4-2 of PIN Interface Definition
	2013-10-11	23. Add chapter 4.8 of SPI Interface 24. Add chapter 6 of Related Test & Testing Standard
	2013-12-12	25. Add Contact Information 26. Modify Power-on/Resetting Period in chapter 5 27. Add the document in table List for Supported& Related Documents 28. Modify LTE TDD in Technical Standard to DL 50Mbps / UL 25Mbps (10MHz) in Table 2-1 29. Modify the RxDiv Band in Table 2-1 30. Add the power consumption in the mode of UMTS/LTE in

All Rights reserved, No Spreading abroad without Permission of ZTEWelink

Version	Date	Description
		chapter 5.1 31. Modify the antenna interface to MHF-A13 of I-PEX
V2.2	2014-03-06	1. Modify the typical voltage of power supply to 3.3V，and the range to 3.1-3.6V 2. Modify the the Profile Dimensions in Figure 8-1 and The PCB layout is shown in the Figure 8-2. 3. Modify the antenna interface to U.FL-R-SMT-1(80)(HRS)/ ECT818000071(ECT) 4. Modify the pins in chapter 4.1 5. Modify the chapter 4.6 of UART interface 6. Update the format and template of the document 7. Update the legal information of this document 8. Update the Product Material Object Picture in Figure 2-1
V2.3	2014-04-15	1. Update the document as the hardware development guide of module ZM8620_V2 2. Add the difference between the module ZM8620_V2 and ZM8620. 3. Update the bands information of two variants ZM8620_V2EUD and ZM8620_V2LAT 4. Modify the Figure in chapter of UART electric feature 5. Add the chapter of 10 and 11 6. Update the Overview of Major Technical Parameters in Table 2–2

Note: Because of ZTEWelink ZM8620_V2 module is still under revision to improve its performances, the present document could be subject to revisions without notice.

All Rights reserved, No Spreading abroad without Permission of ZTEWelink

Contact Information

Post	9/F, Tower A, Hans Innovation Mansion, North Ring Rd., No.9018, Hi-Tech Industrial Park, Nanshan District, Shenzhen, P.R.China.
Web	www.ztewelink.com
Phone	+86-755-86360200-8679
E-Mail	ztewelink@zte.com.cn

Note: Consult our website for up-to-date product descriptions, documentation, application notes, firmware upgrades, troubleshooting tips, and press releases

Besides, ZTEWelink provides various technical support ways to the customers, such as support by phone, website, instant messaging, E-mail and on-site.

All Rights reserved, No Spreading abroad without Permission of ZTEWelink

Contents

LEGAL INFORMATION ..... **I**

1 ABOUT THIS DOCUMENT **1**

1.1 Application Range 1

1.2 Purpose 1

1.3 Supported & Reference Document List 1

1.4 Abbreviations 2

2 PRODUCT OVERVIEW **3**

2.1 Product Technical Parameter 4

2.2 Function Overview 7

2.2.1 Baseband Function 7

2.2.2 Radio Frequency Function 7

3 MECHANIC FEATURE **9**

3.1 Dimensions and Interface 9

3.2 Antenna Interface 11

3.3 Thermal Design 12

4 PIN DESCRIPTION **14**

4.1 Dimensions and Interface 14

4.1.1 Definition of PIN I/O Parameters 14

4.1.2 PIN Configuration Diagram 14

4.1.3 PIN Description 15

4.2 Feature of Interface Power Level 18

4.2.1 Power Level of IO Interface 18

4.3 Power Interface 19

4.3.1 Description of Power PINs 19

4.3.2 Requirement of Power Supply 19

4.4 (U)SIM Card Interface 19

4.4.1 Description of PINs 19

All Rights reserved, No Spreading abroad without Permission of ZTEWelink

4.4.2 Electric Feature 20
4.5 USB2.0 Interface 20
4.5.1 Description of PINs 20
4.5.2 Electric Feature 21
4.6 UART Interface 21
4.6.1 Description of PINs 21
4.6.2 Electric Feature 22
4.7 SPI Interface 23
4.8 Reset Signal PERST# 24
4.9 WAKE# Signal 24
4.10 W_DISABLE_N Signal 25
4.11 Recommended Upgrade Methods 26
5 ELECTRIC FEATURE 27
5.1 Power Feature 27
5.1.1 Power Supply 27
5.1.2 Working Current 27
5.2 Power-on/Resetting Flow 28
5.3 Resetting Flow 29
6 RELATED TEST & TESTING STANDARD 30
6.1 Testing Reference 30
6.2 Description of Testing Environment 30
6.3 Reliability Testing Environment 31
6.4 Reliability Test Result 32
7 RF SPECIFICATIONS 34
7.1 Technical Specification for UMTS Mode Radio Frequency 34
7.1.1 Maximum Transmission Power 34
7.1.2 Receiving Sensitivity 34
7.1.3 Spurious Specification 35
7.2 Technical Specification of GSM Mode Radio Frequency 35

All Rights reserved, No Spreading abroad without Permission of ZTEWelink

7.2.1 Maximum Transmission Power 35
7.2.2 Receiving Sensitivity 36
7.3 Technical Specification of LTE Mode Radio Frequency 36
7.3.1 Maximum Transmission Power 36
7.3.2 Receiving Sensitivity 36
7.3.3 Spurious Specification 38
8 ANTENNA 41
8.1 RF Antenna Specification 41
8.1.1 Technical Parameter for the Main Antenna Connector 41
8.2 Proposal on Layout of Product in Terminal Product 42
8.3 Antenna Dimensions and Location 43
8.4 Diversity Antenna Design 43
9 DEBUGGING ENVIRONMENT AND METHOD 44
9.1 Debugging Board 44
9.2 Interfaces on Debugging Board 45
9.2.1 JTAG Interface 45
9.2.2 USB Interface 45
9.2.3 Power-supply Interface 45
9.2.4 USIM Card Console Interface 46
9.2.5 PON_RESET_N Button 46
9.2.6 W_DISABLE_N Button 46
9.2.7 LED Indicator 46
10 PACKAGE SYSTEM 47
11 SAFETY INFORMATION 48

All Rights reserved, No Spreading abroad without Permission of ZTEWelink

Figures

Figure 2–1 Product Material Object Picture 4
Figure 2–2 System Connection Diagram 7
Figure 3–1 PCI Express Mini Card Dimensions Type and Slot Compatibility 11
Figure 3–2 Antenna Interface Flag Diagram (with Diversity) 12
Figure 3–3 Radio Frequency Interface Test Base 12
Figure 4–1 PIN Distribution Diagram 15
Figure 4–2 PIN Configuration Diagram 15
Figure 4–3 (U)SIM Card Signal Connection Circuit 19
Figure 4–4 Module Serial Port & AP Application Processor 22
Figure 4–5 The connection of ZM8620_V2 UART and Standard RS-232-C interface 23
Figure 4–6 Reference Circuit Design of PERST# Signal 24
Figure 4–7 Reference Connection Circuit of WAKE# Signal 25
Figure 4–8 Reference Circuit Design of W_DISABLE_N Signal 26
Figure 5–1 Module Reset Flow 29
Figure 8–1 the Profile Dimensions 41
Figure 8–2 Recommended PCB layout 42
Figure 9–1 The diagram for the switching board 44
Figure 9–2 Debugging Board 45
Figure 10–1 Package process of ZM8620_V2 modules 47

All Rights reserved, No Spreading abroad without Permission of ZTEWelink

Tables

Table 1–1 List for Supported& Related Documents 1
Table 1–2 Abbreviation List 2
Table 2–1 The bands informaiton of ZM8620_V2 module 3
Table 2–2 Overview of Major Technical Parameters 4
Table 2–3 Product Operating Frequency Band 8
Table 3–1 PCI Express Mini Card 9
Table 4–1 PIN Parameters 14
Table 4–2 PIN Interface Definition 15
Table 4–3 Power Level Range of Digital Signal 18
Table 4–4 Definition & Description of (U) SIM Card Signal Group 20
Table 4–5 Definition of UART Signal 21
Table 4–6 Definition and Description of SPI Control Signal Group 23
Table 4–7 Definition and Description of PERST# Signal 24
Table 4–8 Definition and Description of W_DISABLE_N Signal 25
Table 5–1 Input Voltages 27
Table 5–2 Averaged standby DC power consumption 27
Table 5–3 DC power consumption in UMTS mode 27
Table 5–4 DC power consumption in LTE mode (Unit: mA) 28
Table 5–5 Power-on/Resetting Period 28
Table 6–1 Testing Standard 30
Table 6–2 Testing Environment 31
Table 6–3 Testing Instrument & Device 31
Table 6–4 Reliability Feature 31
Table 6–5 Temperature Testing Result under Windless Environment 32
Table 6–6 Test Results of High/low Temperature Running and Reliability Test 33
Table 7–1 Maximum Transmission Power 34
Table 7–2 Receiving Sensitivity Reference Table 34
Table 7–3 General Requirement of Receiver Spurious Emission 35
Table 7–4 Additional Spurious Emission Requirement 35
Table 7–5 Maximum Transmission Power 35
Table 7–6 Reference Table of Receiving Sensitivity 36
Table 7–7 Maximum Transmission Power 36
Table 7–8 Receiving Sensitivity Reference Table 37
Table 7–9 General Requirement of Receiver Spurious Emission 38
Table 7–10 UE Co-existence Spurious Emission Requirement 38

All Rights reserved, No Spreading abroad without Permission of ZTEWelink

1 About This Document

1.1 Application Range

This document is applicable as the hardware development guide of ZM8620_V2 LTE module product. The user can conduct secondary development according to the requirement and guidance in this document. And it is only applicable for the hardware application development based on the use of ZM8620_V2 module product.

1.2 Purpose

This document provides the design and development fundamentals for the users of ZM8620_V2. By reading this document, the user can have an overall knowledge of this product, and a clear understanding of the technical parameters, hardware interfaces, electrical and mechanical details of this product. With this document, the user can use ZM8620_V2 successfully fulfill the wireless communication function development of M2M applications including Wireless POS, mobile terminal products such as Tablet, Notepad etc.

1.3 Supported & Reference Document List

Besides this hardware development document, ZTEWelink also provides the software development guide. Table 1-1 is the list of supported documents.

Table 1–1 List for Supported& Related Documents

NUM	Document Name
1	ZTEWelink Software Development Guide of LTE Module Products-V2.3.pdf
2	ZTEWelink ZM8620_V2 Module Specification.pdf
3	AT Command reference guide for ZTEWelink LTE Module.pdf
4	3GPP LTE 36.101 protocol (Evolved Universal Terrestrial Radio Access (E-UTRA); User Equipment (UE) radio transmission and reception)

All Rights reserved, No Spreading abroad without Permission of ZTEWelink

5	3GPP TS 34.121 protocol

1.4 Abbreviations

Table 1-2 is a list of the relevant abbreviations, and interpretations in Chinese and English involved in the whole document.

Table 1–2 Abbreviation List

Abbreviations	English full name
BER	Bit Error Rate
DCE	Data circuit-terminating equipment
DL	Downlink
DTE	Data terminal equipment
DTR	Data terminal ready
DPCH	Dedicated Physical Channel
DPCH_Ec	Average energy per PN chip for DPCH. DPCH
EMC	Electromagnetic compatibility
ESD	Electro-Static discharge
FDD	Frequency Division Duplexing
GPRS	General Packet Radio Service
GSM	Global Standard for Mobile Communications
I/O	Input/output
LED	Light Emitting Diode
PCB	Printed Circuit Board
SIM	Subscriber Identification Module
SMS	Short Message Service
SPI	Serial Peripheral Interface
UART	Universal asynchronous receiver-transmitter
UMTS	Universal Mobile Telecommunication System
USB	Universal Serial Bus
WCDMA	Wideband Code Division Multi Access

All Rights reserved, No Spreading abroad without Permission of ZTEWelink

2 Product Overview

ZM8620_V2 is a multimode wireless communication module with mini-PCIE express interface, which can be applied in but not limited to equipment such as Tablet, Vehicle Mounted Terminals, CPE and electronic consumer products, and provides equipment with high-speed data access service in mobile environment (LTE FDD, UTMS and GSM network).

ZM8620_V2contains two variants ZM8620_V2EUD and ZM8620_V2LAT. Customer can choose the dedicated type based on the wireless network configuration. The following table shows the entire radio band configuration of ZM8620_V2series.

Table 2–1 The bands informaiton of ZM8620_V2 module

	BAND	ZM8620_V2EUD	ZM8620_V2LAT
FDD-LTE	BAND 1	✓	✓
	BAND 2	--	✓
	BAND 3	✓	--
	BAND 4	--	✓
	BAND 5	--	✓
	BAND 7	✓	✓
	BAND 8	✓	✓
	BAND12	--	✓
	BAND 20	✓	--
TD-LTE	BAND 38	--	✓
	BAND 40	✓	--
UMTS	BAND 1	✓	√
	BAND 2	✓	√
	BAND 4	--	√
	BAND 5	✓	√
	BAND 8	✓	√
GSM	Quadband	✓	✓

NOTE:

In the Table 2-1 “✓” means theband is supported by module ZM8620_V2, while “--” means not supported

The Figure 2-1 below shows the product material object picture.

All Rights reserved, No Spreading abroad without Permission of ZTEWelink

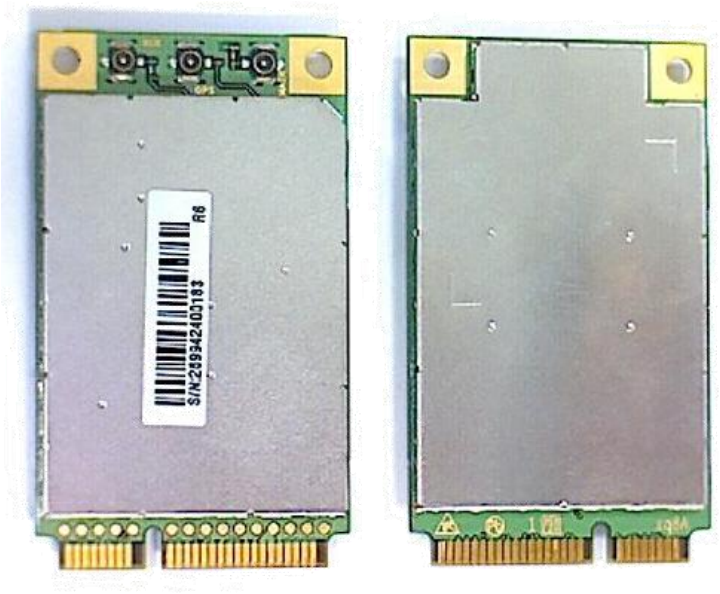

Figure 2–1 Product Material Object Picture

2.1 Product Technical Parameter

The major features of ZM8620_V2 can be described from the aspects of mechanic feature, base band, radio frequency, technical standard and environment feature. Table 2-2 is a list of the major technical parameters and features supported by ZM8620_V2.

Table 2–2 Overview of Major Technical Parameters

Item	Feature	Specifications
Mechanic Specifications	Dimensions	51mm x 30mm x 4.9mm
	Weight	About 11g
	Form Factor	Mini-PCIE package(52Pin)
Baseband	(U)SIM/SIM	3V SIM card and 1.8V SIM card
	Memory(SDRAM/ NAND)	128MByte & 256MByte
	MICRO SD Card	No memory card support
	USB Version	USB 2.0 HIGH SPEED
	UART Interface	Yes
	Reset/Power_on/Power_off interface	Yes
	SPI Interface	Yes
	Maximum power	TBD

All Rights reserved, No Spreading abroad without Permission of ZTEWelink

Item	Feature	Specifications	
	consumption		
	Power supply	Typical is 3.3V, the range is 3.2-3.6V	
	Working current	Peak current	About 2.5A
		Average normal working current	TBD
		Standby current	TBD
	LED Control	Yes, Module can output the signal to control the LED of the main board	
RF	GSM Band	EDGE/GPRS/GSM: 1900/1800/900/850MHz	
	CDMA Band	N/A	
	RF switch	RF switch controlled by AT command	
	RxDiv Band	ZM8620_V2EUD	UMTS: 2100/1900/850/900MHz LTE FDD: Band 1,3,7,8,20 LTE TDD: Band 40
		ZM8620_V2LAT	UMTS: 2100/1900/1700/850/900MHz LTE FDD: Band 1,2,4,5,7,8,12.17 LTE TDD: Band 38
	Max. transmitter power	WCDMA/HSDPA 2100/1900/1700/850/900MHz: Power Class 3 (+24dBm +1/-3dB) LTE FDD: 2600/2100/1900/1700/900/850/700MHz Power Class 3 (+23dBm +2.7/-2.7dB) LTE TDD: Band 38 Power Class 3 (+23dBm +2.7/-2.7dB) GSM/GPRS 850MHz/900MHz: Power Class 4 (+33dBm±2dBm) GSM/GPRS 1800MHz/1900MHz: Power Class 1 (+30dBm±2 dBm) EDGE 850MHz/900MHz: Power Class E2 (+27dBm ±3dBm) EDGE 1800MHz/1900MHz: Power Class E2 (+26dBm -4/+3dBm)	
	Receiving sensitivity	UMTS2100/1700: ≤-106.7 dBm UMTS1900/850: ≤-104.7 dBm UMTS900: ≤-103.7 dBm LTE 2600/1900: ≤-92dBm(20 MHz) LTE 2100/1700: ≤-94dBm(20 MHz) LTE 900/700: ≤-94dBm(10 MHz) LTE 850: ≤-95dBm(10 MHz) LTE Band 38: ≤-94dBm(20 MHz) GSM850/900/1800/1900: ≤-102dBm	

All Rights reserved, No Spreading abroad without Permission of ZTEWelink

Item	Feature	Specifications	
	Equalization	Yes	
	Main Antenna	Provide external main Antenna Interface of RF connector mode	
	GPS Antenna	Provide external GPS Antenna Interface of RF connector mode	
	Receive Diversity Antenna	Provide external Diversity Antenna Interface of RF connector mode	
Technical Standard	LTE TDD	DL 50Mbps / UL 25Mbps (10MHz)	
	GSM/EDGE/WCDMA	GSM CS: UL 9.6kbps/DL 9.6kbps GPRS: Multi-slot Class 10 EDGE: Multi-slot Class 12 WCDMA CS: UL 64kbps/DL 64kbps WCDMA PS: UL 384kbps/DL 384kbps	
	HSDPA/HSUPA/ HSPA+/ DC-HSPA+	HSDPA Rel 6: DL 14.4Mb/s HSUPA Rel 6: UL 5.76Mb/s HSPA+ Rel 7: DL 28/UL 5.76Mb/s DC-HSPA+ Rel 8: DL 42/UL 5.76 Mb/s	
	CDMA 1xEV-DO	N/A	
	LTE-FDD	DL 100Mbps / UL 50Mbps (Category 3)	
	3GPP Release	R99, R5, R6, R7, R8(HSPA+),R9(FDD)	
	OS	Windows XP/Vista/7/8, Android, Linux, WinCE	
	GPRS Class	Class A	
Environment	Operating Temperature	-10 to 60 ℃	
	Storage Temperature	-40 to 85 ℃	
	Humidity	5%~ 95%	
Application	DATA	RAS	Yes
		ECM	Yes
		NDIS	Yes
	SMS	Yes	
	MMS	Yes, not support embedded MMS stack	
	STK	No	
	TCP/IP	No	
	USSD	Yes (Phase I &Phase II)	
	Phonebook	Yes	

All Rights reserved, No Spreading abroad without Permission of ZTEWelink

Item	Feature	Specifications
	NETWORK LOCK	No
	BAND LOCK	Yes
	SIM Reader	Yes
	Firmware Update	Yes
	GPS/AGPS	Yes

2.2 Function Overview

2.2.1 Baseband Function

When connect the module product ZM8620_V2 to the system board, there are several main signal groups as follows: USB signal, SIM card signal, UART signal, GPIO signal, SPI signal, power on and resetting signal, wakeup signal, power supply and ground. At the same time, ZM8620_V2 has the main antenna interface, diversity antenna interface, and GPS antenna interface.

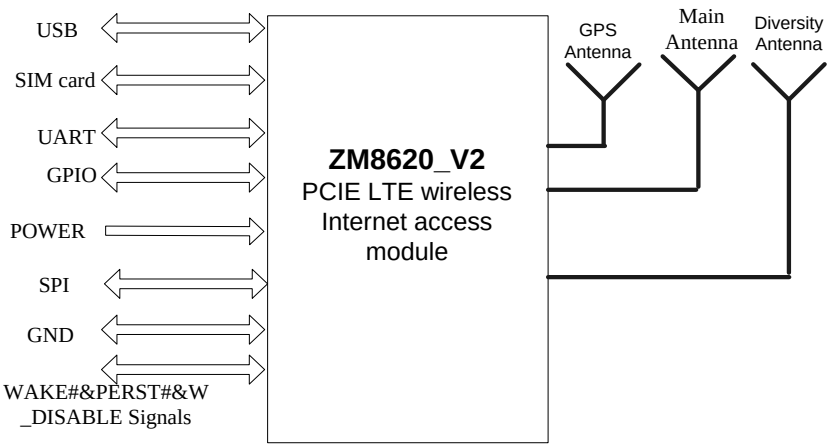

Figure 2–2 System Connection Diagram

2.2.2 Radio Frequency Function

The radio frequency function of ZM8620_V2 can be viewed from the aspect of over-the-air wireless bearer network, frequency band, whether receive diversity feature is supported.

(a) Support LTE FDD, LTE TDD, UMTS;

All Rights reserved, No Spreading abroad without Permission of ZTEWelink

(b) Support GSM 850/900/1800/1900 MHz;

(c) Support the diversity receives;

The operating frequencies of module ZM8620_V2 are shown as Table 2-3.

Table 2–3 Product Operating Frequency Band

Operating Frequency Band	Uplink Frequency Band (Uplink)	Downlink Frequency Band (Downlink)
UMTS850	824 MHz — 849 MHz	869 MHz — 894 MHz
UMTS900	880 MHz — 915 MHz	925 MHz — 960 MHz
UMTS1700	1710 MHz — 1755MHz	2110 MHz — 2155MHz
UMTS1900	1850 MHz — 1910 MHz	1930 MHz — 1990 MHz
UMTS2100	1920 MHz — 1980 MHz	2110 MHz — 2170 MHz
GSM1900	1850 MHz — 1910 MHz	1930 MHz — 1990 MHz
GSM850	824 MHz — 849 MHz	869 MHz — 894 MHz
GSM900	890 MHz — 915MHz	935 MHz — 960MHz
GSM1800	1710 MHz — 1785MHz	1805 MHz — 1880MHz
LTE-FDD Band17	788 MHz — 798 MHz	734 MHz — 746 MHz
LTE-FDD Band5	824 MHz — 849MHz	869 MHz — 894 MHz
LTE-FDD Band8	880 MHz — 915 MHz	925 MHz — 960 MHz
LTE-FDD Band4	1710 MHz — 1755MHz	2110 MHz — 2155 MHz
LTE-FDD Band2	1850 MHz — 1910MHz	1930 MHz — 1990MHz
LTE-FDD Band1	1920 MHz — 1980 MHz	2110 MHz — 2170 MHz
LTE-FDD Band7	2500 MHz — 2570MHz	2620 MHz — 2690MHz
LTE-TDD Band38	2570 MHz — 2620MHz	2570 MHz — 2620MHz

All Rights reserved, No Spreading abroad without Permission of ZTEWelink

3 Mechanic Feature

3.1 Dimensions and Interface

This product adopts the standard PCI Express Mini Card interface type, and the contour size is designed according to F1 type. Figure 3-1 illustrates the dimensions and slot compatibility of PCI Express Mini Card.

Users of this module can refer to the document named PCI Express Mini Card Electromechanical Specification Revision 1.2, October 26 2007 for the detail of PCIE interface.

Table 3–1 PCI Express Mini Card

Card Type		Full-Mini-Only Socket	Half-Mini-Only Socket	Dual-Use Socket	Dual Head-to-Head Socket	
		Connector A	Connector A	Connector A	Connector A	Connector B
F1	Full-Mini	Yes	No	No	No	No
F2	Full-Mini with bottom-side keep outs	Yes	No	Yes	Yes	No
F3	Half-Mini	No	Yes	Yes	Yes	No
F4	Half-Mini with bottom-side keep outs	No	Yes	Yes	Yes	Yes

All Rights reserved, No Spreading abroad without Permission of ZTEWelink

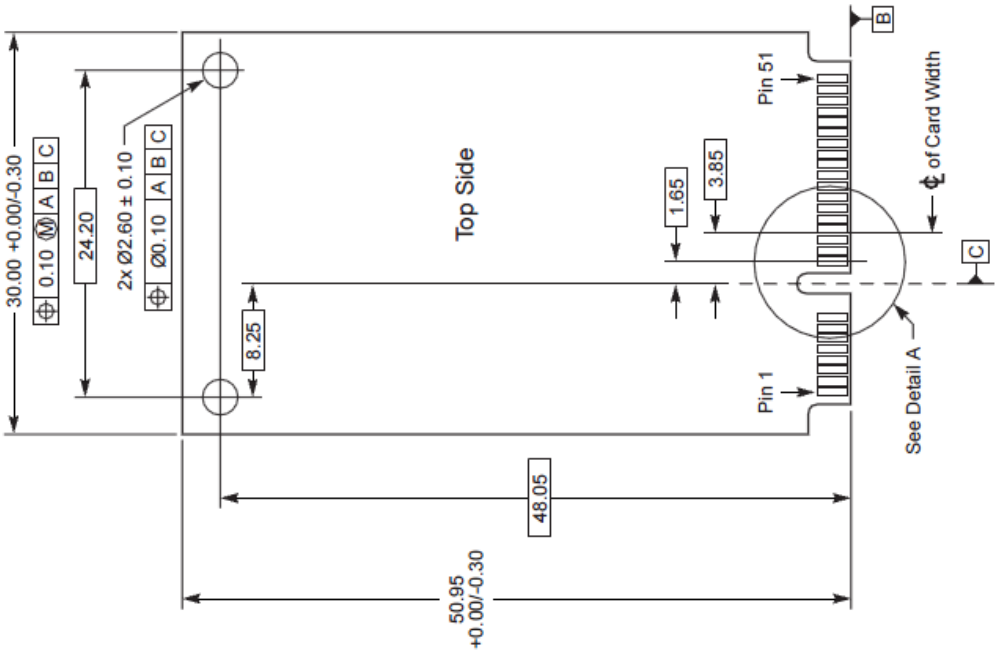
30.00 +0.00/-0.30
0.10 M A B C
24.20
2x Ø2.60 ± 0.10
Ø0.10 A B C
8.25
Top Side
1.65
3.85
Pin 51
Pin 1
B
C
℄ of Card Width
See Detail A
48.05
50.95
+0.00/-0.30

(a)

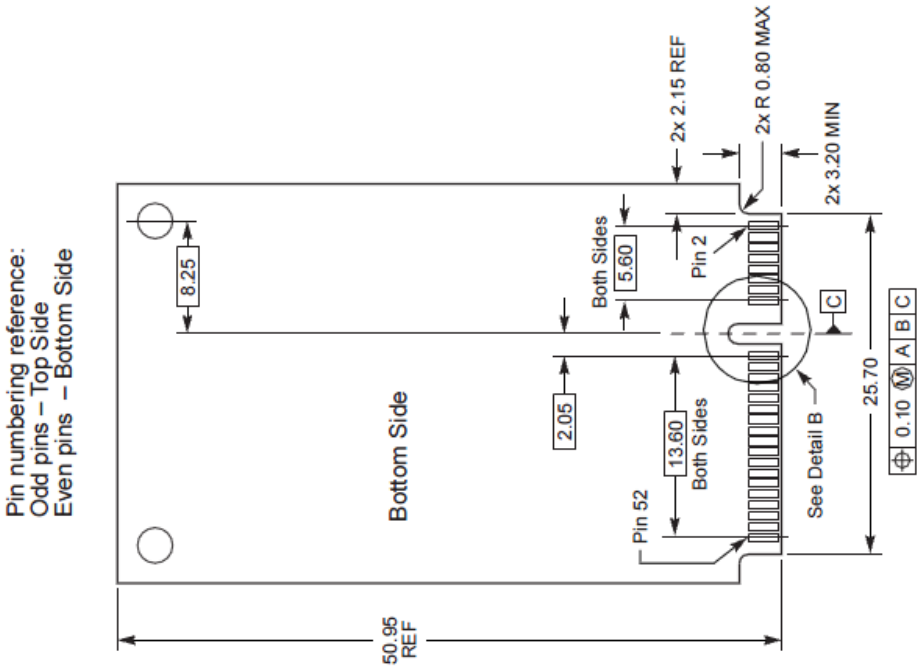
Pin numbering reference:
Odd pins – Top Side
Even pins – Bottom Side
8.25
Bottom Side
2.05
Both Sides
5.60
13.60
Both Sides
Pin 52
Pin 2
2x 2.15 REF
2x R 0.80 MAX
2x 3.20 MIN
C
See Detail B
25.70
0.10 M A B C
50.95
REF

(b)

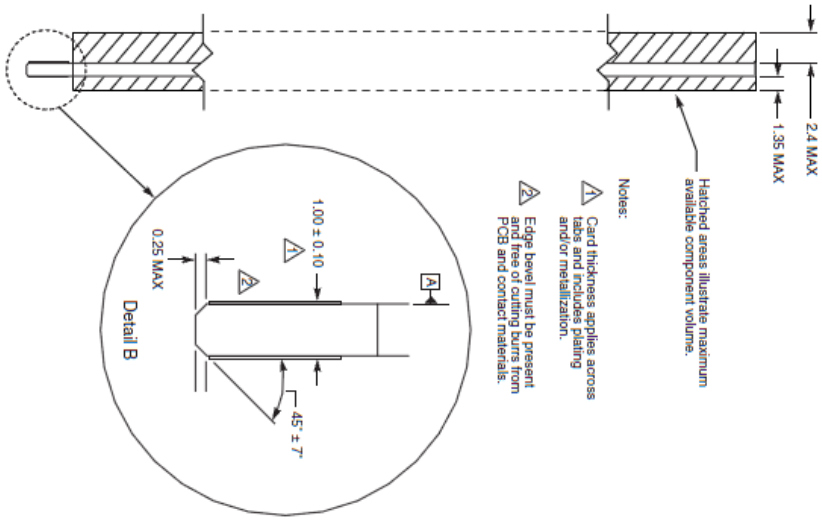

(c)

Figure 3–1 PCI Express Mini Card Dimensions Type and Slot Compatibility

Figure (a) is TOP surface dimensions; Figure (b) is BOTTOM surface dimensions; Figure (c) is thickness information.

3.2 Antenna Interface

This product has three radio frequency antenna interfaces: One is the main antenna interface (there is the "MAIN" flag on the PCB), one is a diversity receiving antenna (diversity optional) interface (there is "AUX" flag on the PCB), and one is GPS antenna, as shown in Figure 3-2. The radio frequency bases adopted by the antenna interface of ZM8620_V2 module are all U.FL-R-SMT-1(80)(HRS)/ ECT818000071(ECT) at present as shown in Figure 3-3.

NOTE:

The radio frequency bases adopted by the antenna interface of ZM8620_V2 module is U.FL-R-SMT-1(80)(HRS)/ECT818000071(ECT) at present instead of adopting 20429-001E MHF-A13 of I-PEX by ZM8620 before.

All Rights reserved, No Spreading abroad without Permission of ZTEWelink

Figure 3–2 Antenna Interface Flag Diagram (with Diversity)

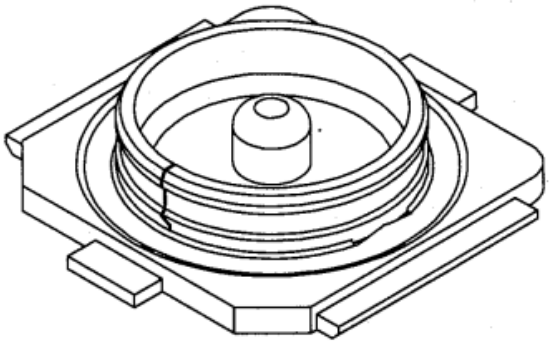

Figure 3–3 Radio Frequency Interface Test Base

This product antenna is placed on the side of the system board. If this product is embedded in a notebook, place it on the top of the LCD screen.

3.3 Thermal Design

The thermal design of this product strictly complies with the specification [PCI Express Mini Card Electromechanical Specification Revision 1.2, October 26, 2007], and distributes the heat source evenly, and has excellent heat dissipating design. As the maximum power consumption of the overall system is very high when transmitting, if it is impossible to ensure the temperature of ZM8620_V2 less than 60 ℃, the rise of the overall system temperature will lead to the performance degradation of ZM8620_V2, or even not operate normally. In order to ensure product performance, safety and stability, the following proposals are provided for the main board design:

(a) Locate the module far away from the switch power and high-speed signal cable as much as

All Rights reserved, No Spreading abroad without Permission of ZTEWelink

possible. Well protect the wiring of the interference sources.

(b) The antenna, and the coaxial cable connecting the network cable and the antenna, cannot be located close the interference sources.

(c) Do not locate the module close to devices with large heat dissipation, such as CPU, south bridge, etc. The high temperature will affect the RF performance.

All Rights reserved, No Spreading abroad without Permission of ZTEWelink

4 Pin Description

4.1 Dimensions and Interface

4.1.1 Definition of PIN I/O Parameters

The definition of the module's I/O parameter is as shown in Table 4-1.

Table 4–1 PIN Parameters

PIN Attribute	Description
AI	Analog signal input
AO	Analog signal output
B	bidirectional digital with CMOS input
DI	Digital signal input
DO	Digital signal output
Z	High-resistance output
P1	PIN group 1, the power supply voltage is VDD_P1
P2	PIN group 2, the power supply voltage is VDD_P2
PU	PIN internal pull-up
PD	PIN internal pull-down

4.1.2 PIN Configuration Diagram

The PIN sequence of interfaces on the module is following the mini-PCIE interface and defined as shown in Figure 4-2.

All Rights reserved, No Spreading abroad without Permission of ZTEWelink

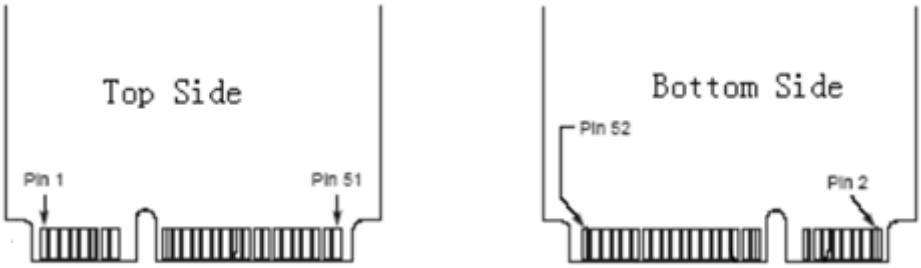

Figure 4–1 PIN Distribution Diagram

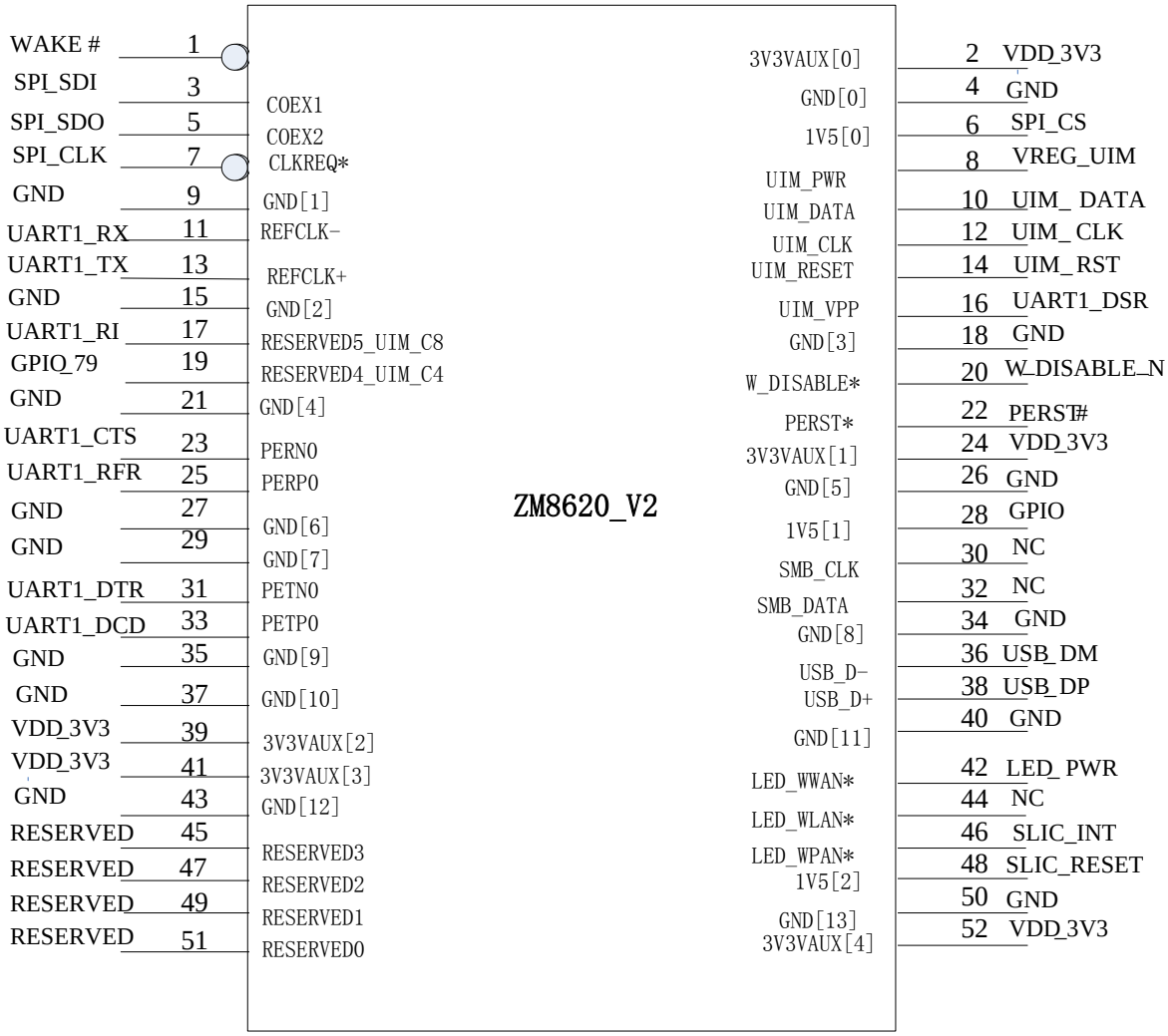

Figure 4–2 PIN Configuration Diagram

4.1.3 PIN Description

Table 4–2 PIN Interface Definition

All Rights reserved, No Spreading abroad without Permission of ZTEWelink

Pin	Standard PIN	ZM8620_V2 PIN	Description	I/O	Remark
1	WAKE#	WAKE#	Wake up the system host	DO	--
2	3.3Vaux	VDD_3V3	3.3V supply	DI	3.1V-3.6V，The typical value is 3.3V
3	COEX1	SPI_SDI	SPI data signal	DI	3.3V
4	GND	GND	Ground	--	Ground pin
5	COEX2	SPI_SDO	SPI data signal	DO	3.3V
6	1.5V	SPI_CS	SPI segment signal	DO	3.3V
7	CLKREQ#	SPI_CLK	SPI synchronization clock	--	3.3V
8	UIM_PWR	VREG_UIM	USIM card power supply	DO	2.85V/1.8V for SIM card
9	GND	GND	Ground	--	Ground pin
10	UIM_DATA	UIM_DATA	USIM card data signal	DI/DO	2.85V/1.8V.this signal requires a pull-up resistor on the host board
11	REFCLK-	UART1_RX	UART port receive data	DI	3.3V
12	UIM_CLK	UIM_CLK	USIM card clock signal	DO	2.85V/1.8V
13	REFCLK+	UART1_TX	UART port transmit data	DO	3.3V
14	UIM_RESET	UIM_RST	USIM card reset signal	DO	2.85V/1.8V
15	GND	GND	Ground	--	Ground pin
16	UIM_VPP	UATR1_DSR	Data is ready	DO	1.8V
17	Reserved(UIM_C8)	UART1_RI	Ringtone indicator	DO	1.8V
18	GND	GND	Ground	--	Ground pin
19	Reserved(UIM_C4)	GPIO_79	The standby and wakeup of module	--	--
20	W_DISABLE#	W_DISABLE_N	Active low signal. This signal is used by the system to disable radio operation on add-in cards that implement radio frequency applications.	DI	Active low
21	GND	GND	Ground	--	Ground pin
22	PERST#	PERST#	Module resetting	DI	1.8V
23	PERn0	UART1_CTS	UART port, clear to send	DI	1.8V
24	+3.3Vaux	VDD_3V3	3.3V supply	DI	3.1V-3.6V，The typical value is 3.3V
25	PERp0	UART1_RFR	UART port, preparing to receive	DO	1.8V
26	GND	GND	Ground	--	Ground pin
27	GND	GND	Ground	--	Ground pin

All Rights reserved, No Spreading abroad without Permission of ZTEWelink

Pin	Standard PIN	ZM8620_V2 PIN	Description	I/O	Remark
28	+1.5V	GPIO	General Purpose Input/Output	DI/DO	1.8V
29	GND	GND	Ground	--	Ground pin
30	SMB_CLK	NC	--	--	--
31	PETn0	UART1_DTR	UART1 data terminal ready	DI	1.8V
32	SMB_DATA	NC	--	--	--
33	PETp0	UART1_DCD	UART1 carrier wave detection	DO	1.8V
34	GND	GND	Ground	--	Ground pin
35	GND	GND	Ground	--	Ground pin
36	USB_D-	USB_DM	USB differential signal, minus side	DI/DO	--
37	GND	GND	Ground	--	Ground pin
38	USB_D+	USB_DP	USB differential signal, positive side	DI/DO	--
39	+3.3Vaux	VDD_3V3	3.3V supply	DI	3.1V-3.6V，The typical value is 3.3V
40	GND	GND	Ground	--	Ground pin
41	+3.3Vaux	VDD_3V3	3.3V supply	DI	3.1V-3.6V，The typical value is 3.3V
42	LED_WWAN#	LED_PWR	Open drain，active low signals. This signal is used to provide status indicator	DO	--
43	GND	GND	Ground	--	Ground pin
44	LED_WLAN#	NC	--	--	--
45	Reserved	Reserved	--	--	--
46	LED_WPAN#	SLIC_INT	exclusive use for routing adaptation	DO	--
47	Reserved	Reserved	--	--	--
48	+1.5V	SLIC_RESET	exclusive use for routing adaptation	DO	--
49	Reserved	Reserved	--	--	--
50	GND	GND	Ground		Ground pin
51	Reserved	Reserved	--	--	--
52	+3.3Vaux	VDD_3V3	3.3V supply	DI	3.1V-3.6V，The typical value is 3.3V

All Rights reserved, No Spreading abroad without Permission of ZTEWelink

NOTE:

The voltage design of external circuit interfaces should match that of the ZM8620_V2 PINs.

In the Table 4-2, the Power supply of ZM8620_V2 has been updated between 3.1V-3.6V, and the typical value is 3.3V at present. While in ZM8620 module, the Power supply is 3.4-4.2V, and typical is 3.8V before.

In ZM8620_V2, the signal of pin 6,11,13,16,17,23,25,28,30~33,44,46.48 is different from that of module ZM8620.

4.2 Feature of Interface Power Level

4.2.1 Power Level of IO Interface

Table 4–3 Power Level Range of Digital Signal

Signal	Description	Min	Max	Units
VIH	High level of input voltage	0.65*VDD_PX	VDD_PX+0.3	V
VIL	Low level of input voltage	-0.3	0.35* VDD_PX	V
VOH	High level of output voltage	VDD_PX-0.45	VDD_PX	V
VOL	Low level of output voltage	0	0.45	V

NOTE:

1. The high/low PWL of input voltage should comply with the range in the table.
2. The high/low PWL of external interface signal should match the interface PWL of ZM8620_V2.
3. VDD_PX indicates the typical voltage of each Pin specified in Table 4-2.

All Rights reserved, No Spreading abroad without Permission of ZTEWelink

4.3 Power Interface

4.3.1 Description of Power PINs

Power VCC (PIN No: 2, 24, 39, 41, 52). This is the positive signal of 3.3V power supply.

GND signal (PIN No: 4, 9, 15, 18, 21, 26, 27, 29, 34, 35, 37, 40, 43, 50). This is the power ground and signal ground of the module, which needs to be connected to the ground on the system board. If the GND signal is not connected completely, the performance of the module will be affected.

4.3.2 Requirement of Power Supply

The power supply is recommended to be within the range of 3.1~3.6V. If the network is in poor situation, the antenna will transmit at the maximum power, and the transient maximum peak current less than 2G mode can reach as high as 1.8A. So the power supply capacity for peak current needs to be above 2.5A, and the average peak current needs to be above 0.9A.

4.4 (U)SIM Card Interface

4.4.1 Description of PINs

ZM8620_V2 module baseband processor integrates the (U)SIM card interface. The signals on SIM card interface is as shown in Figure 4-3.

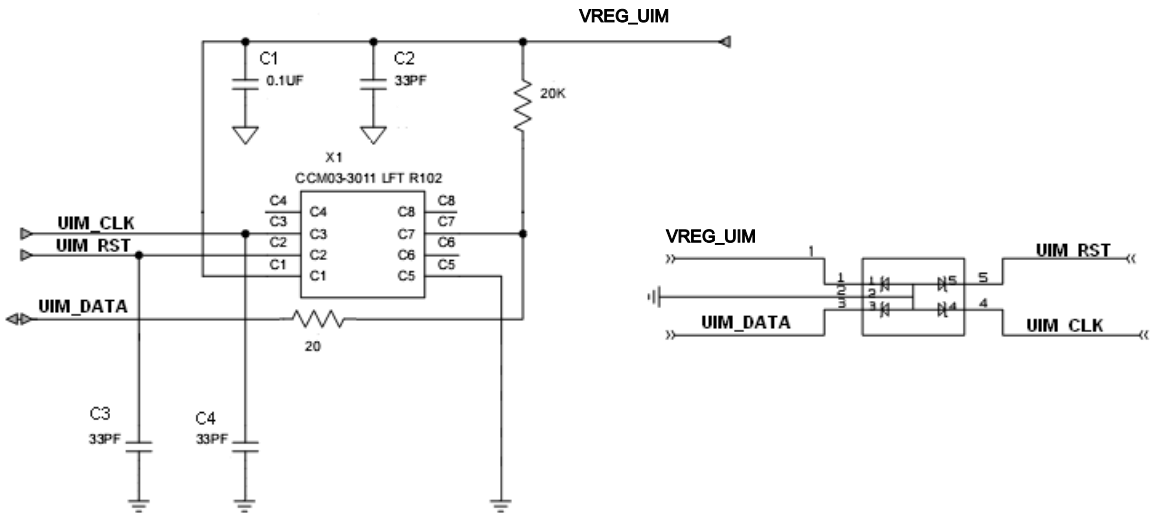

Figure 4–3 (U)SIM Card Signal Connection Circuit

All Rights reserved, No Spreading abroad without Permission of ZTEWelink

NOTE:

The PCB wiring of UIM card should be laid closely around the module as possible as you can, and the ESD component should be put near the UIM card socket by the customer.

Table 4–4 Definition & Description of (U) SIM Card Signal Group

PIN	Signal Name	Signal Description
8	VREG_UIM	USIM card power, output from the module
10	UIM_DATA	USIM card DATA signal, two-way signal
12	UIM_CLK	USIM card clock signal, output from the module
14	UIM_RST	USIM card reset signal, output from the module

4.4.2 Electric Feature

The signals of (U)SIM card signal group are described in Table 4-4. As the USIM card console is placed on the system board side, be sure to add the ESD protection during the design.

To comply with the requirements of 3GPP TS 51.010-1 and EMC authentication, it is recommended to place (U)SIM card console close to the (U)SIM card interface, to prevent the wiring from being too long, which might seriously distort the waveform and thus affect the signal integrity. It is recommended to make the grounding protection for UIM_CLK and UIM_DATA signal wiring.

Cascade one 0.1uF and 33pF capacitor between VREG_UIM and GND, and cascade a 33pF bypass capacitor between UIM_CLK, UIM_RST and GND, to filter out the interference by RF signals. It is recommended to cascade a 20ohm resistance on UIM_DATA signal. And UIM_DATA must be pulled up via a 20K ohm resistance to VREG_UIM.

4.5 USB2.0 Interface

4.5.1 Description of PINs

ZM8620_V2 has the high-speed USB2.0 interface,. USB is connected to the system board side via the PCI-E interface, to communicate with the processor on the system board side. Its PINs are PIN36 (USB_DM), PIN38 (USB_DP). The USB interface can be mapped to difference ports, such as Diagnostics port to capture the log, AT port is used to complete AT command interaction with the AP side.

All Rights reserved, No Spreading abroad without Permission of ZTEWelink

4.5.2 Electric Feature

The USB interface of Module complies with the USB2.0 specifications and the electrical characteristics. During the PCB wiring, the wires must be parallel, the distance should be as short as possible and as far away as possible from the antenna, and it's enveloped by the ground wires to avoid strong interference sources. USB_DP and USB_DM should be wired strictly in the differential mode, and the length difference of the two signals is within 1mm.

NOTE:

The differential resistance needs to be controlled within 90Ω, and the difference cannot exceed 5%.

It is recommended to cascade the high-speed common-mode rejection filter on the USB differential traces. If some of the trace is exposed, it is recommended to add the ESD protection device, and the junction capacitor of the ESD protection device should better be kept within 1.5pF. Large junction capacitor will distort the waveform, and affect the bus communication.

4.6 UART Interface

The UART interface is used as MODEM port by default which is occupied by data service.

4.6.1 Description of PINs

The wireless module ZM8620_V2 supports the full UART interface with flow control function, which complies with the RS-232 interface protocol, and supports the 8-wires serial bus interface or 2-wires serial interface. The module can perform the serial communication and AT instruction interaction with external.

This UART port supports the programmable data width, programmable data stop bit and programmable parity check, and has an independent TX and RX FIFOs (512 bytes for each). For the normal UART application (non-Bluetooth), the maximum baud rate is 230400bps, and the default baud rate is 115200bps. The PINs are defined as shown in Table 4-5.

Table 4–5 Definition of UART Signal

PIN	Signal Name	Description	Level
11	UART1_RX	UART port RX receive data	Power level is 3.3V.
13	UART1_TX	UART port TX transmit data	Power level is 3.3V.

All Rights reserved, No Spreading abroad without Permission of ZTEWelink

16	UART1_DSR	Data is ready	Power level is 1.8V.
17	UART1_RI	Ringtone indicator	
23	UART1_CTS	UART port CTS clear to send	
25	UART1_RFR	UART port RFR preparing to receive	
31	UART1_DTR	DTE is ready	
33	UART1_DCD	Carrier detection	

4.6.2 Electric Feature

During the software interconnection process, there is a method of capturing logs, and it is recommended that this interface be kept during the design and the testing point be reserved. If the module is used together with the application processor, and the PWL of it matches with the power level of the module, the connection mode is as shown in Figure 4-4. The 4-wires or 2-wires mode can also be used for connection. If it does not match the PWL of AP interface, it is recommended to add the PWL conversion circuit. Otherwise, it might cause unstable com ports because the level is not matched or cause damage to the module because it is at high level for long time.

The connection of ZM8620_V2 UART port and standard RS-232-C interface can be through the chip like class 232. The design involves the transformation of TTL level and EIA level. We recommend to use the chip of NLSX5014MUTAG. If using the 2-byte serial bus interface, MAX3232 is recommended, and if using the 8-byte serial bus interface, SP3238 or MAX3238 is recommended. The connection mode is as shown in Figure 4-5.

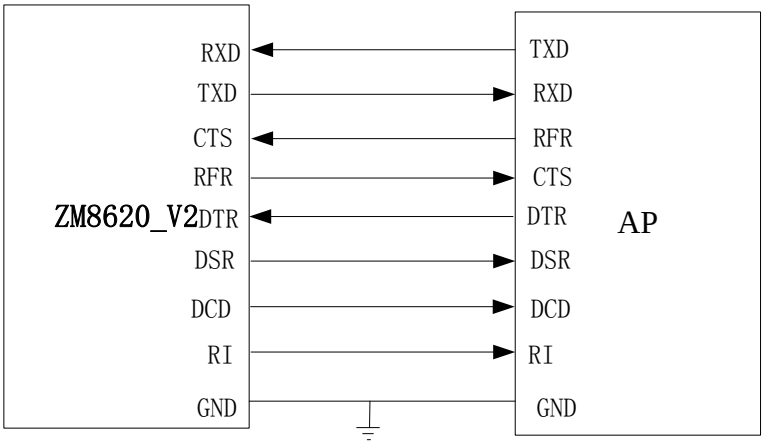

Figure 4–4 Module Serial Port & AP Application Processor

All Rights reserved, No Spreading abroad without Permission of ZTEWelink

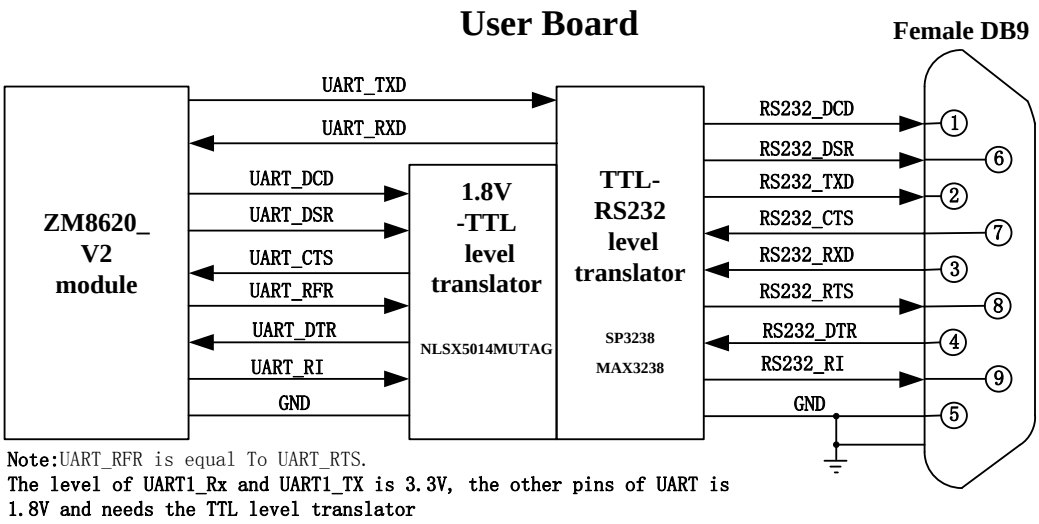

Figure 4–5 The connection of ZM8620_V2 UART and Standard RS-232-C interface

4.7 SPI Interface

The SPI signal interface is used to control PCI voices. The SPI_CLK clock is 127.2kHz. Pin No: 3/5/6/7 are SPI control signals. Table 4-6 describes detailed definition for each signal. The system board side needs to convert the power level of SPI_SDI (SPI control output signal cable on the system board side) into 3.3V, to comply with the high power level VIH input requirements.

Table 4–6 Definition and Description of SPI Control Signal Group

PIN	Signal Name	I/O	Signal Description
3	SPI_SDI	I	SPI data signal, ZM8620_V2 input, input high power level is VIH, and low power level is VIL.
5	SPI_SDO	O	SPI data signal, ZM8620_V2 output, input high power level is VOH, and low power level is VOL.
6	SPI_CS	O	SPI chip select pin, ZM8620_V2 output, input high power level is VOH, and low power level is VOL.
7	SPI_CLK	--	SPI synchronization clock, 100kHz, output by ZM8620_V2, high power level is VOH, and low power level is VOL.

NOTE:

VIH, VIL, VOH, and VOL comply with the power I/O interface power level requirements in 4.2.1.

All Rights reserved, No Spreading abroad without Permission of ZTEWelink

4.8 Reset Signal PERST#

The PERST# signal (PIN No: 22) is the system reset signal of ZM8620_V2, active low. Table 4-7 illustrates its control logic. It shows that pull down the reset key (PERST#) to 100ms will reset the module.

NOTE:

Do not directly connect this signal to the positive end of power supply.

Table 4–7 Definition and Description of PERST# Signal

PERST#	ZM8620_V2 Status
'1'	ZM8620 V2 is in the normal working status.
'0' and ≥100ms	RF is in the OFF mode. ZM8620_V2 is reset.

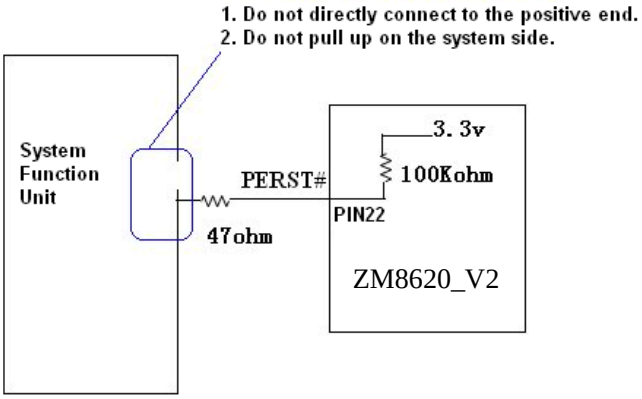

Figure 4–6 Reference Circuit Design of PERST# Signal

4.9 WAKE# Signal

Figure 4-7 illustrates the reference connection circuit of WAKE# signal. The WAKE# signal (PIN No.: 1) is an output signal, active low level or low fall edge. This signal is a reserved signal for ZM8620_V2 to wake up the system host. ZM8620_V2 pulls up the power level to VDD_3V3 internally by the 10Kohm resistance. It is recommended to connect the 47ohm resistance to the GPIO PIN on the main chip (If this GPIO PIN is on the system side, it can wake up the host).

All Rights reserved, No Spreading abroad without Permission of ZTEWelink

NOTE:

Do not directly connect this signal to the positive end of power supply.

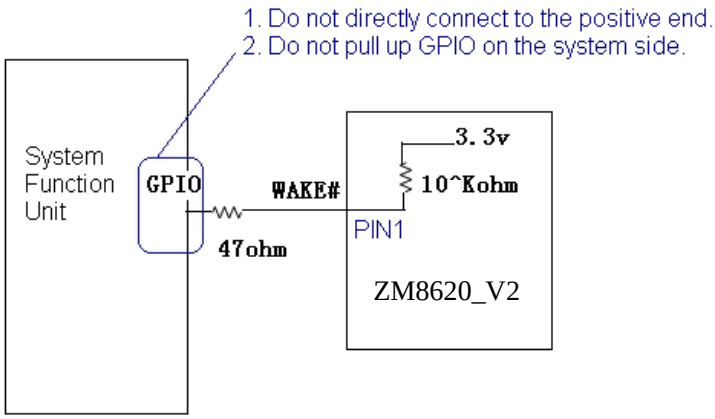

Figure 4–7 Reference Connection Circuit of WAKE# Signal

4.10 W_DISABLE_N Signal

The W_DISABLE_N signal (PIN No: 20) is the input signal of ZM8620_V2, active low. Table 4-8 describes its control logic.

Table 4–8 Definition and Description of W_DISABLE_N Signal

W_DISABLE_N	ZM8620_V2 Status
‘1’	RF is enabled.
‘0’	RF is disabled.

The W_DISABLE_N signal is pulled up by the 150Kohm resistance to 3.3V inside ZM8620_V2, so the system side does not pull up this circuit any more.

NOTE:

Do not directly connect this signal to the positive end of power supply.

Figure 4-8 illustrates the reference circuit design of W_DISABLE_N signal.

All Rights reserved, No Spreading abroad without Permission of ZTEWelink

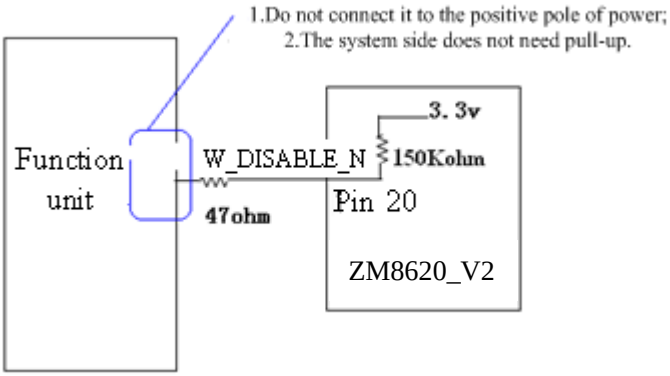

Figure 4–8 Reference Circuit Design of W_DISABLE_N Signal

4.11 Recommended Upgrade Methods

It's recommended to use the one-click software upgrade tool to upgrade through the USB port provided by ZTEWelink in the Windows system. If the customers want to upgrade the module in other operation systems, ZTEWelink provides the corresponding reliable tools too.

All Rights reserved, No Spreading abroad without Permission of ZTEWelink

5 Electric Feature

5.1 Power Feature

5.1.1 Power Supply

The input voltage range of the module is DC 3.1V~3.6V, and the typical value is 3.3V, as shown in Table 5-1.

Table 5–1 Input Voltages

Parameter	Min	Typical	Max
Input voltage	3.1V	3.3V	3.6V

5.1.2 Working Current

The working current range of the module is as shown in Table 5-2 to Table 5-4. The tables provide the working power consumption under LTE and WCMA mode. As the power consumptions are affected by many factors, it's normal that there are some differences when tested by users, and these tables can only be viewed as one example.

Table 5–2 Averaged standby DC power consumption

Mode	Bands	Test value (mA)	Remark
HSDPA/WCDMA	UMTS bands	TBD	Sleep mode
GSM/GPRS/EDGE	GSM bands	TBD	Sleep mode
LTE	LTE bands	TBD	Sleep mode
Note: assumes USB bus is fully suspended during measurements. Under different environments, the testing results might be slightly different. Take the actual situation as the reference.			

Table 5–3 DC power consumption in UMTS mode

Power Consumption of R99					
BAND		BAND1	BAND2	BAND5	BAND8
Power Consumption (Unit: mA)	Maximum Transmit power (23.32dBm)	TBD	TBD	TBD	TBD

All Rights reserved, No Spreading abroad without Permission of ZTEWelink

Power Consumption of HSDPA					
Power Consumption with HS-DPCCH (HSDPA)	Maximum Transmit power (dBm)	22.62	22.56	22.04	22.51
	Power Consumption (mA)	TBD	TBD	TBD	TBD
Power Consumption of HSUPA					
Power Consumption with HS-DPCCH (HSUPA)	Maximum Transmit power (dBm)	22.2	21.9	21.7	21.7
	Power Consumption (mA)	TBD	TBD	TBD	TBD
Power Consumption of HSPA+					
Power Consumption (Unit: mA)	Maximum Transmit power (22.89dBm)	TBD	TBD	TBD	TBD

Table 5–4 DC power consumption in LTE mode (Unit: mA)

Test band		BAND 1	BAND 2	BAND 4	BAND 5	BAND 7	BAND 8	BAND 12	TDD BAND38
BW 10M	band channel	300	650	2175	2450	3400	3500	5130	38200
Power Consumption	QPSK 1RB MAX PWR	TBD	TBD	TBD	TBD	TBD	TBD	TBD	TBD
	QPSK 12RB MAX PWR	TBD	TBD	TBD	TBD	TBD	TBD	TBD	TBD
	QPSK 50RB MAX PWR	TBD	TBD	TBD	TBD	TBD	TBD	TBD	TBD
	16QAM 12RG MAX PWR	TBD	TBD	TBD	TBD	TBD	TBD	TBD	TBD
	16QAM 50RG MAX PWR	TBD	TBD	TBD	TBD	TBD	TBD	TBD	TBD

NOTE:

Under different environments and conditions (for example: under different band channel, transmit power, power level etc.), the testing values of Table 5-3 and Table 5-4 might be slightly different. Take the actual situation as the reference.

5.2 Power-on/Resetting Flow

Table 5–5 Power-on/Resetting Period

All Rights reserved, No Spreading abroad without Permission of ZTEWelink

No.	Status	Average	Remark
1	Response time of power-on and power-off	About 12s	From the time of module power-on to port initialization
2	Searching network upon power-on	About 15s	Depending on the actual network situation

Note:

1. The specific power-on/power-off response time depends on the actual software versions. The time of searching network upon power-on differs according to the network quality. The above values are only an example.
2. By default, the module is started up upon power-on.

5.3 Resetting Flow

The failing edge of PERST# reset signal initiates a reset process. The module is reset by driving this pin with a low pulse.

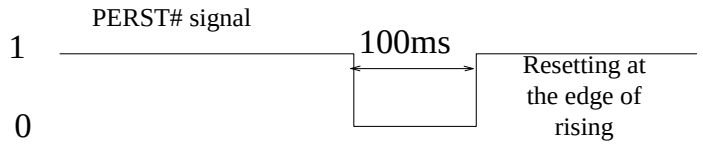

Figure 5–1 Module Reset Flow

All Rights reserved, No Spreading abroad without Permission of ZTEWelink

6 Related Test & Testing Standard

6.1 Testing Reference

The related tests of ZM8620_V2 comply with the IEC standard, including the equipment running under high/low temperature, storage under high/low temperature, temperature shock and EMC. Table 6-1 is the list of testing standard, which includes the related testing standards for ZM8620_V2.

Table 6–1 Testing Standard

Testing Standard	Document Reference
IEC6006826	Environmental testing-Part2.6:Test FC: Sinusoidal Vibration
IEC60068234	Basic environment testing procedures part2.
IEC60068264	Environmental testing-part2-64: Test FH: vibration, broadband random and guidance.
IEC60068214	Environmental testing-part 2-14: Test N:change of temperature.
IEC60068229	Basic environmental testing procedures-part2: Test EB and guidance.
IEC6006822	Environmental testing-part2-2:Test B:dry heat
IEC6006821	Environment testing-part2-1: Test A: cold.
GB/T 15844.2	MS telecommunication RF wireless phone-set environment requirement & experimental method – part 4: Strict level of experimental condition
GB/T 2423.17	Basic environment experiment of electronic products-Experiment Ka: Salt mist experiment method
GB/T 2423.5	Basic environment experiment of electronic products-Part2:Experiment method Try Ea & Introduction: Shock
GB/T 2423.11	Basic environment experiment of electronic products-Part2:Experiment method Try Fd: Broad frequency band random vibration (General requirement)
TIA/EIA 603 3.3.5	TIA Standard-part3-5:Shock Stability

Note: 1. IECL International Electro technical Commission; 2. GB/T: Recommended national standard

6.2 Description of Testing Environment

The working temperature range of ZM8620_V2 is divided into the normal working temperature range

All Rights reserved, No Spreading abroad without Permission of ZTEWelink

and the extreme working temperature range. Under the normal working temperature range, the testing result of RF complies with the requirements of 3GPP specifications, and its function is normal. Under the extreme temperature range, the RF index basically complies with the 3GPP specifications, and the quality of data communication is affected to a certain extent, but its normal function is not affected. ZM8620_V2 has passed the EMC test. Table 6–2 is the requirement for the testing environment, and Table 6–3 lists out the instruments and devices that might be used during the test.

Table 6–2 Testing Environment

Working Condition	Min Temperature	Max Temperature	Remark
Normal working condition	-10 ℃	60 ℃	All the indexes are good.
Extreme working condition	-20 ℃	70 ℃	Some indexes become poorer.
Storage	-40 ℃	85 ℃	Storage environment of ZM8620_V2

Table 6–3 Testing Instrument & Device

Testing Item	Instrument & Device
RF test	Comprehensive testing device
	RF cable
	Tower antenna
	Microwave darkroom
High/Low-temperature running & storage test	High/Low-temperature experimental box
Temperature shock test	Temperature shock experimental box
Vibration test	Vibration console

6.3 Reliability Testing Environment

The reliability test includes the vibration test, high/low-temperature running, high/low-temperature storage and temperature shock experiment test. Refer to Table 6-4 for the specific parameters.

Table 6–4 Reliability Feature

All Rights reserved, No Spreading abroad without Permission of ZTEWelink

Test Standard / Test Item	Test Condition	Test Reference
Random Oscillation	Frequency range: 5-20Hz, PSD:1.0m2/s3; Frequency range: 20-200Hz, -3dB/oct; On the 3 axis, 1 hour for each axis	IEC 68-2-6
Shock Testing	Half sine wave shock Acceleration: 20g Short time: 11ms On 6 axis, one shock on each axis (±x, y and z)	TIA/EIA 603 3.3.5 GB/T 15844.2.4.1
Temperature Shock	Low temperature: -40 ℃ ±2 ℃ High temperature: +80 ℃ ±2 ℃ Temperature changing time: less than 30 seconds Testing duration: 2 hours Cycles: 10	IEC 68-2-14 Na
High-temperature Working	Temperature: +60 ℃ Testing duration: 24h	ZTE standard
Low-temperature Working	Temperature: -10 ℃ Testing duration: 24h	ZTE standard
High-temperature and high humidity	Temperature: +55 ℃ Humidity: 95% Duration: 48 hours	ZTE standard
High-temperature Storage	Temperature: 85 ℃ Testing duration: 24h	IEC 68-2-1 Ab
Low-temperature Storage	Temperature: -40 ℃ Testing duration: 24h	IEC 68-2-2 Bb

6.4 Reliability Test Result

Table 6–5 Temperature Testing Result under Windless Environment

Mode	Ambient Temperature	Voltage	Transmission power	Duration	Results
GPRS Class 10	+25 ℃	3.3V	Max	≥1 hour	Pass
EDGE Class 12	+25 ℃	3.3V	Max	≥1 hour	Pass

All Rights reserved, No Spreading abroad without Permission of ZTEWelink

WCDMA	+25 ℃	3.3V	Max	≥1 hour	Pass
LTE	+25 ℃	3.3V	Max	≥1 hour	Pass

Table 6–6 Test Results of High/low Temperature Running and Reliability Test

Test Item	Test Conditions and Criteria	Test Items	Results
Random vibration	Refer to Table 6-4	RF test and function test	Pass
Impact test	Refer to Table 6-4	RF test and function test	Pass
Temperature impact	Refer to Table 6-4	RF test and function test	Pass
Running at low temperature	Refer to Table 6-4	RF test and function test	Pass
Running at high temperature	Refer to Table 6-4	RF test and function test	Pass
Running at the limit of low temperature	Refer to Table 6-4	RF test and function test	Pass
Running at the limit of high temperature	Refer to Table 6-4	RF test and function test	Pass
Storage at low temperature	Refer to Table 6-4	RF test and function test	Pass
Storage at high temperature	Refer to Table 6-4	RF test and function test	Pass

All Rights reserved, No Spreading abroad without Permission of ZTEWelink

7 RF Specifications

The following content is the description of module radio frequency performance.

7.1 Technical Specification for UMTS Mode Radio Frequency

7.1.1 Maximum Transmission Power

In the normal test environment, UMTS 2100/1900/850/900/(1700)MHz maximum output power meets the requirement in Table 7-1. The test values are the average of some test samples. Under different environments, the testing results might be slightly different. Take the actual situation as the reference.

Table 7–1 Maximum Transmission Power

Power grade	Maximum output power	Tolerance value	Test value
Class 3	24dBm	+1/-3dBm	TBD

7.1.2 Receiving Sensitivity

UMTS 2100/1900/850/900/(1700)MHz receiving sensitivity meets 3GPP TS 34.121 protocol requirement. Under the specification that BER does not exceed 0.001, it meets the requirement in Table 7-2. The test values are the average of some test samples. Under different environments, the testing results might be slightly different. Take the actual situation as the reference.

Table 7–2 Receiving Sensitivity Reference Table

Operating band	Unit	DPCH_Ec <REFSENS>	<REFIOR>	Test value
Ⅰ	dBm/3.84 MHz	-117	-106.7	TBD
Ⅱ	dBm/3.84 MHz	-115	-104.7	TBD
Ⅳ	dBm/3.84 MHz	-117	-106.7	TBD
Ⅴ	dBm/3.84 MHz	-115	-104.7	TBD
Ⅷ	dBm/3.84 MHz	-114	-104.7	TBD
NOTE 1: For Power class 3 this shall be at the maximum output power NOTE 2: For Power class 4 this shall be at the maximum output power NOTE 3: For the UE which supports both Band Ⅲ and Band Ⅸ operating frequencies, the reference sensitivity level of -114.5 dBm DPCH_Ec<REFSENS> shall apply for Band Ⅸ.				

All Rights reserved, No Spreading abroad without Permission of ZTEWelink

The corresponding <REFIOR> is -104.2 dBm

7.1.3 Spurious Specification

Spurious emission meets 3GPP TS 34.121 protocol requirement.

The receiver spurious emission power refers to the spurious power generated or amplified by the receiver, which is tested from the antenna connector.

The spurious emission shall meet the requirements in Table 7-3 and Table 7-4:

Table 7–3 General Requirement of Receiver Spurious Emission

Frequency band	Resolution rate bandwidth	Minimum requirement
9 kHz ≤ f < 1 GHz	100 kHz	-57 dBm
1 GHz ≤ f < 12.75 GHz	1 MHz	-47 dBm

Table 7–4 Additional Spurious Emission Requirement

Frequency band	Measurement bandwidth	Minimum requirement
1920 MHz ≤ f ≤ 1980 MHz	3.84 MHz	-60 dBm
2110 MHz ≤ f ≤ 2170 MHz	3.84 MHz	-60 dBm

7.2 Technical Specification of GSM Mode Radio Frequency

7.2.1 Maximum Transmission Power

In the normal test environment, GSM: 1900/1800/900/850MHz maximum output power meets the requirement in Table 7-5. The test values are the average of some test samples. Under different environments, the testing results might be slightly different. Take the actual situation as the reference.

Table 7–5 Maximum Transmission Power

Operating band	Power control level	Power class	Maximum output power	Tolerance value	Test Value
II	2	Class 2	30dBm	±2dBm	TBD
III	2	Class 2	30dBm	±2dBm	TBD

All Rights reserved, No Spreading abroad without Permission of ZTEWelink

Ⅴ	2	Class 4	33dBm	±2dBm	TBD
Ⅷ	2	Class 4	33dBm	±2dBm	TBD

7.2.2 Receiving Sensitivity

GSM 1900/1800/900/850MHz receiving sensitivity meets 3GPP TS 34.121 protocol requirement. Under the specification that BER does not exceed 2.24, it meets the requirement smaller than -102dBm. It meets the requirement in Table 7-6. The test values are the average of some test samples. Under different environments, the testing results might be slightly different. Take the actual situation as the reference.

Table 7–6 Reference Table of Receiving Sensitivity

Operating Band	Unit	3GPP Protocol Claim	Test value
GSM850	dBm/3.84 MHz	≤-102dBm	TBD
GSM900	dBm/3.84 MHz	≤-102dBm	TBD
GSM1800	dBm/3.84 MHz	≤-102dBm	TBD
GSM1900	dBm/3.84 MHz	≤-102dBm	TBD

7.3 Technical Specification of LTE Mode Radio Frequency

7.3.1 Maximum Transmission Power

The maximum output power of LTE FDD, LTE TDD in the normal test environment meets Table 7-7 requirement. The test values are the average of some test samples. Under different environments, the testing results might be slightly different. Take the actual situation as the reference.

Table 7–7 Maximum Transmission Power

Power grade	Maximum output power	Tolerance value	Test value
Class 3	23 dBm	+2.7/-2.7dBm	21.4 dBm

7.3.2 Receiving Sensitivity

LTE FDD/TDD receiving sensitivity meets 3GPP TS 36.101 protocol requirement. Under the specification that the throughput is not smaller than 95% of the maximum throughput, it meets Table 7-8 requirement. The test values are the average of some test samples. Under different environments, the

All Rights reserved, No Spreading abroad without Permission of ZTEWelink

testing results might be slightly different. Take the actual situation as the reference.

Table 7–8 Receiving Sensitivity Reference Table

E-UTRA Band	Channel bandwidth							Test value (dBm)
	1.4 MHz (dBm)	3 MHz (dBm)	5 MHz (dBm)	10 MHz (dBm)	15 MHz (dBm)	20 MHz (dBm)	Duplex Mode	
1	-	-	-100	-97	-95.2	-94	FDD	TBD
2	-102.7	-99.7	-98	-95	-93.2	-92	FDD	TBD
3	-101.7	-98.7	-97	-94	-92.2	-91	FDD	--
4	-104.7	-101.7	-100	-97	-95.2	-94	FDD	TBD
5	-103.2	-100.2	-98	-95			FDD	TBD
6			-100	-97			FDD	--
7			-98	-95	-93.2	-92	FDD	TBD
8	-102.2	-99.2	-97	-94			FDD	TBD
9			-99	-96	-94.2	-93	FDD	--
10			-100	-97	-95.2	-94	FDD	--
11			-100	-97			FDD	--
12	-101.7	-98.7	-97	-94			FDD	TBD
13			-97	-94			FDD	--
14		-99.2	-97	-94			FDD	--
…								--
17	-102.2	-99.2	-97	-94			FDD	--
18			-100	-97	-95.2		FDD	--
19			-100	-97	-95.2		FDD	--
20			-97	-94	-91.2	-90	FDD	--
21			-100	-97	-95.2		FDD	--
…								--
33			-100	-97	-95.2	-94	TDD	--
34			-100	-97	-95.2	-94	TDD	--
35	-106.2	-102.2	-100	-97	-95.2	-94	TDD	--
36	-106.2	-102.2	-100	-97	-95.2	-94	TDD	--
37			-100	-97	-95.2	-94	TDD	--
38			-100	-97	-95.2	-94	TDD	TBD
39			-100	-97	-95.2	-94	TDD	--
40			-100	-97	-95.2	-94	TDD	--

All Rights reserved, No Spreading abroad without Permission of ZTEWelink

41			[-100]	[-97]	[-95.2]	[-94]	TDD	--

Note 1: The transmitter shall be set to maximum output power level as defined in clause 6.2.5 in the protocol of 3GPP TS 36.101

Note 2: Reference measurement channel is specified A.3.2 with one sided dynamic OCNG Pattern OP.1 FDD/TDD as described in Annex A.5.1.1/A.5.2.1 in the protocol of 3GPP TS 36.101

Note 3: The signal power is specified per port

Note 4: For the UE which supports both Band 3 and Band 9 the reference sensitivity level of Band 3 + 0.5 dB is applicable for band 9

Note 5: For the UE which supports both Band 11 and Band 21 the reference sensitivity level is FFS.

7.3.3 Spurious Specification

Spurious emission meets 3GPP TS 36.101 protocol requirement.

The receiver spurious emission power refers to the spurious power generated or amplified by the module, which is tested from the antenna connector.

The spurious emission shall meet the requirement of Table 7-9 and Table 7-10:

Table 7–9 General Requirement of Receiver Spurious Emission

Frequency range	Maximum level	Measurement bandwidth
9 kHz ≤ f < 150 kHz	-36 dBm	1 kHz
150 kHz ≤ f < 30 MHz	-36 dBm	10 kHz
30 MHz ≤ f < 1000 MHz	-36 dBm	100 kHz
1 GHz ≤ f < 12.75 GHz	-30 dBm	1 MHz

Table 7–10 UE Co-existence Spurious Emission Requirement

E-UTRA Band	Spurious emission				
	Protected band	Frequency range (MHz)	Level (dBm)	Bandwidth (MHz)	Comment
1	E-UTRA Band 1, 3, 7, 8, 9, 11, 34, 38, 40	FDL_low - FDL_high	-50	1	
	Frequency range	860-895	-50	1	
		1884.5-1919.6			Note[6],Note[7]
	Frequency range	1884.5-1915.7	-41	0.3	Note [6], Note[8]
	E-UTRA band 33	1900-1920	-50	1	Note [3]
	E-UTRA band 39	1880-1920	-50	1	Note [3]
2	E-UTRA Band 2, 4, 5, 10, 12, 13, 14, 17	FDL_low- FDL_high	-50	1	

All Rights reserved, No Spreading abroad without Permission of ZTEWelink

3	E-UTRA Band 1, 3, 7, 8, 9, 11, 33, 34, 38	FDL_low- FDL_high	-50	1	
4	E-UTRA Band 2, 4, 5, 10, 12, 13, 14, 17	FDL_low- FDL_high	-50	1	
5	E-UTRA Band 2, 4, 5, 10, 12, 13, 14, 17	FDL_low- FDL_high	-50	1	
6	E-UTRA Band 1, 9, 11, 34	FDL_low- FDL_high	-50	1	
	Frequency range	860-875	-37	1	
	Frequency range	875-895	-50	1	
		1884.5-1919.6			Note[7]
	Frequency range	1884.5-1915.7	-41	0.3	Note[8]
7	E-UTRA Band 1, 3, 7, 8, 33, 34	FDL_low- FDL_high	-50	1	
	E-UTRA Band 38	2570-2620	-50	1	Note [3]
8	E-UTRA Band 1, 8, 7, 33, 34, 38, 39, 40	FDL_low- FDL_high	-50	1	
	E-UTRA band 3	1805-1830	-50	1	Note [4]
	E-UTRA band 3	1805-1880	-36	0.1	Note [2,4]
	E-UTRA band 3	1830-1880	-50	1	Note [4]
	E-UTRA band 7	2640-2690	-50	1	Note [4]
	E-UTRA band 7	2640-2690	-36	0.1	Note [2,4]
9	E-UTRA Band 1, 9, 11, 34	FDL_low- FDL_high	-50	1	
	Frequency range	860-895	-50	1	
		1884.5-1919.6			Note[7]
	Frequency range	1884.5-1915.7	-41	0.3	Note[8]
10	E-UTRA Band 2, 4, 5, 10, 12, 13, 14, 17	FDL_low- FDL_high	-50	1	
11	E-UTRA Band 1, 9, 11, 34	FDL_low- FDL_high	-50	1	
	Frequency range	860-895	-50	1	
		1884.5-1919.6			Note[7]
	Frequency range	1884.5-1915.7	-41	0.3	Note[8]
12	E-UTRA Band 2, 4, 5, 10, 12, 13, 14, 17	FDL_low- FDL_high	-50	1	
13	E-UTRA Band 2, 4, 5, 10, 12, 13, 14, 17	FDL_low- FDL_high	-50	1	
	Frequency range	763-775	-35	0.00625	
14	E-UTRA Band 2, 4, 5, 10, 12, 13, 14, 17	FDL_low- FDL_high	-50	1	
	Frequency range	763-775	-35	0.00625	
17	E-UTRA Band 2, 4, 5, 10, 12, 13, 14, 17	FDL_low FDL_high	-50	1	
…					

All Rights reserved, No Spreading abroad without Permission of ZTEWelink

33	E-UTRA Band 1, 3, 8, 34, 38, 39, 40	FDL_low- FDL_high	-50	1	Note [5]
34	E-UTRA Band 1, 3, 7, 8, 9, 11, 33, 38,39, 40	FDL_low- FDL_high	-50	1	Note [5]
	Frequency range	860-895	-50	1	
	Frequency range	1884.5-1919.6	-41	0.3	Note[7]
		1884.5-1915.7			Note[8]
35					
36					
37					
38	E-UTRA Band 1,3, 33, 34	FDL_low- FDL_high	-50	1	
39	E-UTRA Band 34, 40	FDL_low- FDL_high	-50	1	
40	E-UTRA Band 1, 3, 33, 34, 39	FDL_low- FDL_high	-50	1	

Note	
1	FDL_low and FDL_high refer to each E-UTRA frequency band specified in Table 5.5-1 in the protocol of 3GPP TS 36.101
2	As exceptions, measurements with a level up to the applicable requirements defined in Table 7-9 are permitted for each assigned E-UTRA carrier used in the measurement due to 2nd or 3rd harmonic spurious emissions. An exception is allowed if there is at least one individual RE within the transmission bandwidth (see Figure 5.6-1 in the protocol of 3GPP TS 36.101) for which the 2nd or 3rd harmonic, i.e. the frequency equal to two or three times the frequency of that RE, is within the measurement bandwidth.
3	To meet these requirements some restriction will be needed for either the working band or protected band
4	Requirements are specified in terms of E-UTRA sub-bands
5	For non synchronized TDD operation to meet these requirements some restriction will be needed for either the working band or protected band
6	Applicable when NS_05 in section 6.6.3.3.1 in the protocol of 3GPP TS 36.101 is signaled by the network.
7	Applicable when co-existence with PHS system working in. 1884.5-1919.6MHz.
8	Applicable when co-existence with PHS system working in 1884.5-1915.7MHz.

All Rights reserved, No Spreading abroad without Permission of ZTEWelink

8 Antenna

8.1 RF Antenna Specification

8.1.1 Technical Parameter for the Main Antenna Connector

The main and diversity antenna is the product U.FL-R-SMT-1(80)(HRS)/ ECT818000071(ECT). The Profile Dimensions is shown in Figure 8-1. If more technical parameter for the main antenna connector is needed, please contact with ZTEWelink.

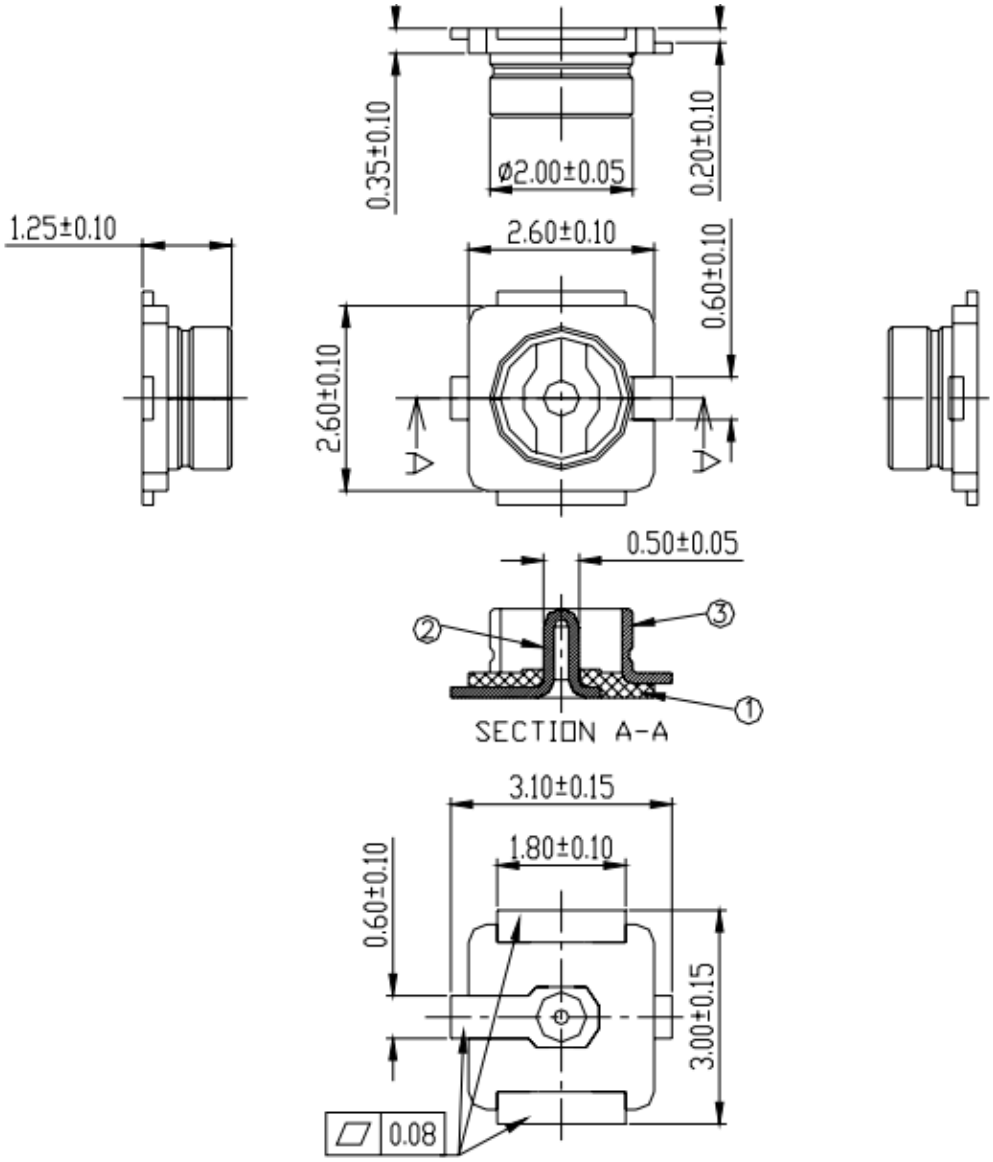

Figure 8–1 the Profile Dimensions

All Rights reserved, No Spreading abroad without Permission of ZTEWelink

The PCB layout is shown in the Figure 8-2.

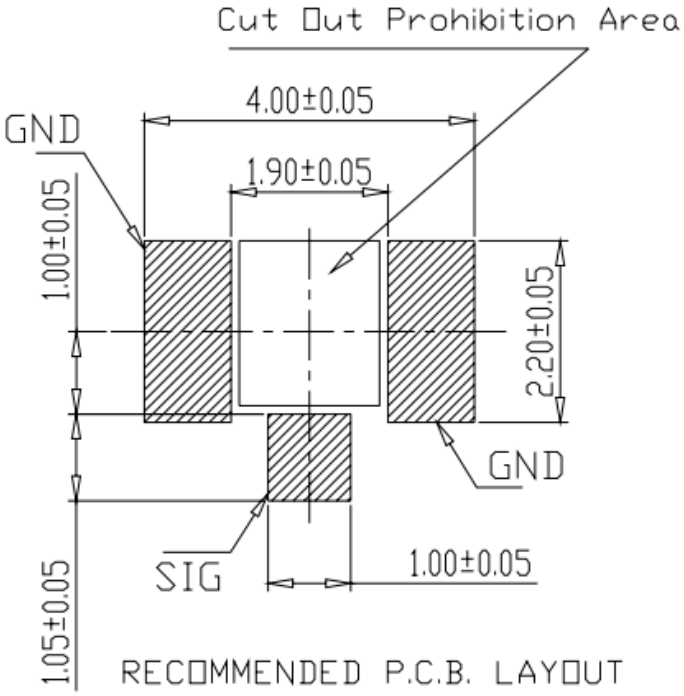

Figure 8–2 Recommended PCB layout

NOTE:

The radio frequency bases adopted by the antenna interface of ZM8620_V2 module is U.FL-R-SMT-1(80)(HRS)/ECT818000071(ECT) at present instead of adopting 20429-001E MHF-A13 of I-PEX by ZM8620 before.

8.2 Proposal on Layout of Product in Terminal Product

The module layout among other terminal products should take full consideration of the electric magnetic compatibility. As the types of terminal products vary and their circuit layouts are different, when considering the module layout, we should reduce the electric magnetic interference from other devices upon the module. Taking 3G Internet-access laptop as an example, during the layout of laptops, make sure that the module is not adjacent to the switch power or the high-speed signal cable, and well protect the cabling of these interference sources. At the same time, keep the antenna and the coaxial cables of network cables and antenna far away from the interference sources. Keep the module away from the devices that have a large heat-radiating capacity such as CPU, hard disk and south bridge, to guarantee that heat can be radiated effectively.

All Rights reserved, No Spreading abroad without Permission of ZTEWelink

8.3 Antenna Dimensions and Location

The dimensions of different terminal products are different, so they impose different requirements upon the performance of antenna. The dimensions and location of antennas are also different. Taking 3G Internet-access laptop as an example, it is recommended that the antenna be placed on the top of LCD.

8.4 Diversity Antenna Design

ZM8620_V2 supports diversity receiving function, and if it is necessary to support diversity, the notebook needs to add diversity antenna. The design method of the diversity antenna is consistent with the main antenna, and its efficiency index is allowed to reduce by 3dB. The isolation of the main antenna and the diversity antenna is required to be bigger than 12dB.

All Rights reserved, No Spreading abroad without Permission of ZTEWelink

9 Debugging Environment and Method

In the process of the actual implementation, it is necessary to adopt the switching board to convert MINI PCIE module interface into the standard USB interface to connect the host for debugging verification. It is also necessary to connect external power supply adaptor to provide the module with sufficient current, and the diagram for the switching board is as follows:

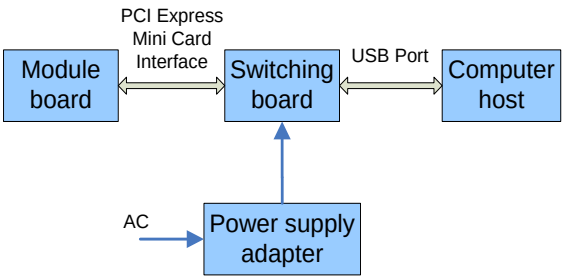

Figure 9–1 The diagram for the switching board

9.1 Debugging Board

Figure 9-2 shows the module debugging & installation method. The debugging board is mainly used to debug the basic functions of ZM8620_V2 module, such as downloading the JTAG program, resetting the module, powering off and shutting down RF, LED indicator display, making a call or browsing web pages via computer UI by inserting the USIM card into the switching board. The USB interface supplies power to the debugging board, provides it to the module after LDO conversion, and directly supplies the power to the module by the power socket on the board.

All Rights reserved, No Spreading abroad without Permission of ZTEWelink

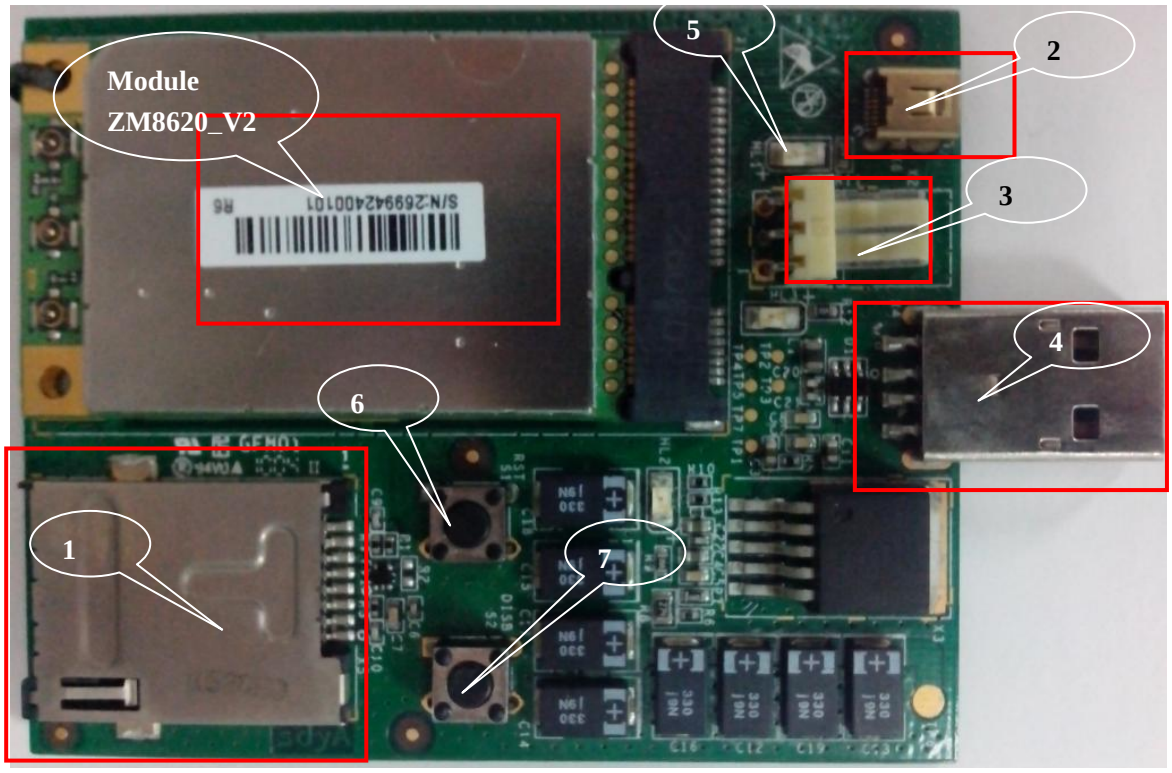

Figure 9–2 Debugging Board

Note: 1 – UIM card console; 2 –JTAG downloading interface; 3- DC power interface; 4 – USB interface; 5 – LED indicator; 6 - PON_RESET_N button (module resetting); 7 –W_DISABLE_N button (RF switch)

9.2 Interfaces on Debugging Board

9.2.1 JTAG Interface

The JTAG interface can be used to download and debug the firmware program. This interface is reserved in the module of ZM8620_V2.

9.2.2 USB Interface

The USB2.0 interface on the debugging board is connected to the PCI-E interface on ZM8620_V2.

9.2.3 Power-supply Interface

The USB interface as illustrated in Figure 9-2 supplies power, provides the 3.3V power to the module after LDO conversion, and directly supplies the 3.3V power to the module by the power socket on the board.

All Rights reserved, No Spreading abroad without Permission of ZTEWelink

9.2.4 USIM Card Console Interface

As shown in Figure 9-2, 1 the USIM card console is the 5PIN USIM card console on the conversion board, connecting to: power, ground, UIM_DATA, USIM_CMD and UIM_CLK. It supports the 1.8V/3V USIM card.

9.2.5 PON_RESET_N Button

This button corresponds to the PON_RESET_N PIN of the PCI-E interfaced. The user presses the button to reset the module.

9.2.6 W_DISABLE_N Button

This button corresponds to the W_DISABLE_N PIN of the PCI-E interface. The user presses this button to enable or disconnect RF, so as to perform the debugging of this PIN.

9.2.7 LED Indicator

The LED indicator on the debugging board is connected to the LED_WWAN_N interface of ZM8620_V2. By controlling the indicator, the user can debug the function of this interface.

All Rights reserved, No Spreading abroad without Permission of ZTEWelink

10 Package System

The ZM8620_V2 modules are wrapped with anti-static shielding bags, which is packaged on EPE trays of 6 pieces each. And these modules are put into cardboard box in a set of 10 trays. Each cardboard box is with 60 modules typically.

The package process of ZM8620_V2 modules is shown as the Figure below. The unit of dimensions is mm.

Figure 10–1 Package process of ZM8620_V2 modules

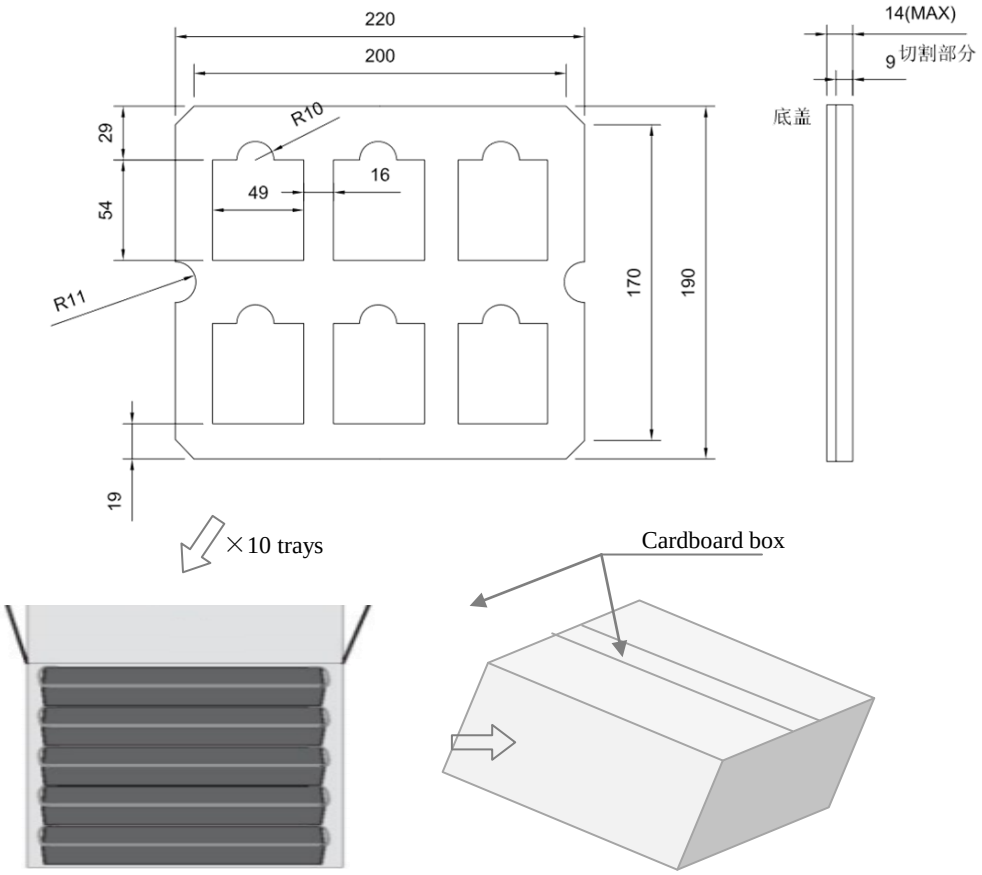

11 Safety Information

The following safety precautions must be observed during all phases of the operation, such as usage, service or repair of any cellular terminal incorporating ZM8620_V2 module. Manufacturers of the cellular terminal should send the following safety information to users, operating personnel and to incorporate these guidelines into all manuals supplied with the product.

The use of this product may be dangerous and has to be avoided in the following areas:

- Where it can interfere with other electronic devices in environments such as hospitals, aircrafts, airports, etc, switch off before boarding an aircraft. Make sure the cellular terminal is switched off in these areas. The operation of wireless appliances in the hospitals, aircrafts and airports are forbidden to prevent interference with communication systems.

- Areas with potentially explosive atmospheres including fuelling areas, below decks on boats, fuel or chemical transfer or storage facilities, areas where the air contains chemicals or particles such as gasoline stations, oil refineries, etc make sure that wireless devices are turned off.

It’s the responsibility of users to enforce other country regulations and the specific environment regulations. And ZTEWelink does not take on any liability for customer failure to comply with these precautions.

All Rights reserved, No Spreading abroad without Permission of ZTEWelink

12.NOTICE

Note1：This device complies with Part 15 of the FCC Rules，Operation is subject to the following two conditions:

(1) this device may not cause harmful interference, and

(2) this device must accept any interference received, including interference that may cause undesired operation.

Note2: This equipment has been tested and found to comply with the limits for a Class B digital device, pursuant to Part 15 of the FCC Rules. These limits are designed to provide reasonable protection against harmful interference in a residential installation. This equipment generates, uses and can radiate radio frequency energy and, if not installed and used in accordance with the instructions, may cause harmful interference to radio communications. However, there is no guarantee that interference will not occur in a particular installation. If this equipment does cause harmful interference to radio or television reception, which can be determined by turning the equipment off and on, the user is encouraged to try to correct the interference by one or more of the following measures:

- ***Reorient or relocate the receiving antenna.***
- ***Increase the separation between the equipment and receiver.***
- ***Connect the equipment into an outlet on a circuit different from that to which the receiver is connected.***
- ***Consult the dealer or an experienced radio/TV technician for help.***

Note3: For EUT which intended use is at least 20 cm between human body and antenna.

Note4: Label of The End Product

The final end product must be labeled in a visible are with the following "Contains TX FCC ID:SRQ-ZM8620" .The FCC part 15.19 statement below has to also be available on the label:This device complies with Part 15 of FCC rules.Operation is subject to the foll owing two conditions: (1) This device may not cause harmful interference, and (2) this device must accept any interference received, including interference that may cause u ndesired operation. To comply with FCC regulations limiting both maximum RF output power and human exposure to RF radiation.

A user manual with the end product must clearly indicate the operating requirements a nd conditions that must be observed to ensure compliance with current FCC RF expos ure guidelines. The end product with an Module may also need to pass the FCC Part 1 5 unintentional emission testing requirements and be properly authorized per FCC Part 15. Note:If this module is intended for use in a portable device,you are responsible for separate approval to satify the SAR requirements of FCC Part 2.1093.