FCC SAR Test Report

APPLICANT	:	ZTE CORPORATION
EQUIPMENT	:	WCDMA/ LTE Multi-Mode Digital Mobile Phone
BRAND NAME	:	ZTE
MODEL NAME	:	A1P
MARKETING NAME	:	A1P
FCC ID	:	SRQ-ZTEA1P
STANDARD	:	FCC 47 CFR Part 2 (2.1093) ANSI/IEEE C95.1-1992 IEEE 1528-2003

We, SPORTON INTERNATIONAL INC., would like to declare that the tested sample has been evaluated in accordance with the procedures and had been in compliance with the applicable technical standards.

The test results in this report apply exclusively to the tested model / sample. Without written approval of SPORTON INTERNATIONAL INC., the test report shall not be reproduced except in full.

Reviewed by: Eric Huang / Deputy Manager

Approved by: Jones Tsai / Manager

Testing Laboratory
1190

SPORTON INTERNATIONAL INC.
No.52, Hwa Ya 1st Rd., Hwa Ya Technology Park, Kwei-Shan District, Taoyuan City, Taiwan (R.O.C.)

Table of Contents

1. Statement of Compliance 4
2. Administration Data 5
3. Guidance Standard 5
4. Equipment Under Test (EUT) 6
4.1 General Information 6
4.2 Maximum Tune-up Limit 7
4.3 General LTE SAR Test and Reporting Considerations 12
5. RF Exposure Limits 15
5.1 Uncontrolled Environment 15
5.2 Controlled Environment 15
6. Specific Absorption Rate (SAR) 16
6.1 Introduction 16
6.2 SAR Definition 16
7. System Description and Setup 17
8. Measurement Procedures 18
8.1 Spatial Peak SAR Evaluation 18
8.2 Power Reference Measurement 19
8.3 Area Scan 19
8.4 Zoom Scan 20
8.5 Volume Scan Procedures 20
8.6 Power Drift Monitoring 20
9. Test Equipment List 21
10. System Verification 23
10.1 Tissue Verification 23
10.2 System Performance Check Results 25
11. RF Exposure Positions 26
11.1 Ear and handset reference point 26
11.2 Definition of the cheek position 27
11.3 Definition of the tilt position 28
11.4 Body Worn Accessory 29
11.5 Wireless Router 29
12. Conducted RF Output Power (Unit: dBm) 30
13. Bluetooth Exclusions Applied 53
14. Antenna Location 54
15. SAR Test Results 55
15.1 Head SAR 57
15.2 Hotspot SAR 61
15.3 Body Worn Accessory SAR 66
15.4 Repeated SAR Measurement 69
16. Simultaneous Transmission Analysis 70
16.1 Head Exposure Conditions 71
16.2 Hotspot Exposure Conditions 77
16.3 Body-Worn Accessory Exposure Conditions 81
17. Uncertainty Assessment 84
18. References 87
Appendix A. Plots of System Performance Check
Appendix B. Plots of High SAR Measurement
Appendix C. DASY Calibration Certificate
Appendix D. Test Setup Photos

Revision History

REPORT NO.	VERSION	DESCRIPTION	ISSUED DATE
FA550405	Rev. 01	Initial issue of report	Jun. 24, 2015

1. Statement of Compliance

The maximum results of Specific Absorption Rate (SAR) found during testing for **ZTE CORPORATION, WCDMA/ LTE Multi-Mode Digital Mobile Phone, A1P,** are as follows.

Equipment Class	Frequency Band	Highest SAR Summary			Highest Simultaneous Transmission 1g SAR (W/kg)
		Head (Separation 0mm)	Body-worn (Separation 10mm)	Wireless Router (Separation 10mm)	
		1g SAR (W/kg)	1g SAR (W/kg)	1g SAR (W/kg)	
PCE	GSM850	0.43	**1.19**	**1.19**	1.57
	GSM1900	0.10	0.70	0.73	
	WCDMA Band V	0.25	0.63	0.63	
	WCDMA Band IV	0.35	1.14	1.14	
	WCDMA Band II	0.18	0.88	0.94	
	LTE Band 12	0.17	0.37	0.39	
	LTE Band 17	0.19	0.42	0.44	
	LTE Band 13	0.20	0.52	0.52	
	LTE Band 5	0.27	0.68	0.68	
	LTE Band 4	0.35	1.11	1.11	
	LTE Band 2	0.16	0.89	0.89	
	LTE Band 30	0.13	0.34	0.34	
	LTE Band 7	0.13	0.40	0.43	
DTS	WLAN 2.4GHz Band	0.86	0.16	0.16	1.35
NII	WLAN 5.2GHz Band	1.08	0.21	-	1.57
	WLAN 5.8GHz Band	**1.14**	0.41	-	
Date of Testing:		2015/05/29 ~ 2015/06/14			

This device is in compliance with Specific Absorption Rate (SAR) for general population/uncontrolled exposure limits (1.6 W/kg) specified in FCC 47 CFR part 2 (2.1093) and ANSI/IEEE C95.1-1992, and had been tested in accordance with the measurement methods and procedures specified in IEEE 1528-2003.

2. Administration Data

Testing Laboratory	
Test Site	SPORTON INTERNATIONAL INC.
Test Site Location	No.52, Hwa Ya 1st Rd., Hwa Ya Technology Park, Kwei-Shan District, Taoyuan City, Taiwan (R.O.C.) TEL: +886-3-327-3456 FAX: +886-3-328-4978

Applicant	
Company Name	ZTE CORPORATION
Address	ZTE Plaza, Keji Road South, Hi-Tech, Industrial Park, Nanshan District, Shenzhen, Guangdong, 518057, P.R.China

Manufacturer	
Company Name	ZTE CORPORATION
Address	ZTE Plaza, Keji Road South, Hi-Tech, Industrial Park, Nanshan District, Shenzhen, Guangdong, 518057, P.R.China

3. Guidance Standard

The Specific Absorption Rate (SAR) testing specification, method, and procedure for this device is in accordance with the following standards:

- FCC 47 CFR Part 2 (2.1093)
- ANSI/IEEE C95.1-1992
- IEEE 1528-2003
- FCC KDB 865664 D01 SAR Measurement 100 MHz to 6 GHz v01r03
- FCC KDB 865664 D02 SAR Reporting v01r01
- FCC KDB 447498 D01 General RF Exposure Guidance v05r02
- FCC KDB 648474 D04 SAR Evaluation Considerations for Wireless Handsets v01r02
- FCC KDB 248227 D01 802.11 Wi-Fi SAR v02r01
- FCC KDB 941225 D01 3G SAR Procedures v03
- FCC KDB 941225 D05 SAR for LTE Devices v02r03
- FCC KDB 941225 D05A Rel.10 LTE SAR Test Guidance v01r01
- FCC KDB 941225 D06 Hotspot Mode SAR v02

4. Equipment Under Test (EUT)

4.1 General Information

Product Feature & Specification	
Equipment Name	WCDMA/ LTE Multi-Mode Digital Mobile Phone
Brand Name	ZTE
Model Name	A1P
Marketing Name	A1P
FCC ID	SRQ-ZTEA1P
IMEI Code	004401783421049 for WWAN test sample 004401783421031 for WLAN test sample
Wireless Technology and Frequency Range	GSM850: 824.2 MHz ~ 848.8 MHz GSM1900: 1850.2 MHz ~ 1909.8 MHz WCDMA Band V: 826.4 MHz ~ 846.6 MHz WCDMA Band IV: 1712.4 MHz ~ 1752.6 MHz WCDMA Band II: 1852.4 MHz ~ 1907.6 MHz LTE Band 2 : 1850.7 MHz ~ 1909.3 MHz LTE Band 4 : 1710.7 MHz ~ 1754.3 MHz LTE Band 5 : 824.7 MHz ~ 848.3 MHz LTE Band 7: 2502.5 MHz ~ 2567.5 MHz LTE Band 12: 699.7 MHz ~ 715.3 MHz LTE Band 13 : 779.5 MHz ~ 784.5 MHz LTE Band 17 : 706.5 MHz ~ 713.5 MHz LTE Band 30 : 2307.5 MHz ~2312.5 MHz WLAN 2.4GHz Band: 2412 MHz ~ 2462 MHz WLAN 5.2GHz Band: 5180 MHz ~ 5240 MHz WLAN 5.8GHz Band: 5745 MHz ~ 5825 MHz Bluetooth: 2402 MHz ~ 2480 MHz NFC : 13.56 MHz
Mode	· GSM/GPRS/EGPRS · RMC/AMR 12.2Kbps · HSDPA · HSUPA · DC-HSDPA · HSPA+ (Downlink Only) · LTE: QPSK, 16QAM · 802.11a/b/g/n/ac HT20/HT40/VHT20/VHT40/VHT80 · Bluetooth v3.0+EDR, Bluetooth v4.1 LE · NFC:ASK
HW Version	wtqD
SW Version	A1PV1.0.0B08
GSM / (E)GPRS Transfer mode	Class B – EUT cannot support Packet Switched and Circuit Switched Network simultaneously but can automatically switch between Packet and Circuit Switched Network.
EUT Stage	Identical Prototype

Remark:

1. This device 2.4GHz WLAN supports Hotspot operation, and 5.2GHz / 5.8 GHz supports WiFi Direct (GC only).
2. This device supported VoIP in GPRS, EGPRS, WCDMA, LTE (e.g. 3rd party VoIP).
3. This device supports GRPS/EGPRS mode up to multi-slot class 10.
4. This device does not support DTM operation.
5. The device support VoLTE function.

4.2 Maximum Tune-up Limit

Mode	Burst average power(dBm)	
	GSM 850	GSM 1900
GSM (GMSK, 1 Tx slot)	33.50	30.00
GPRS (GMSK, 1 Tx slot)	33.50	30.00
GPRS (GMSK, 2 Tx slots)	33.00	30.00
EDGE (8PSK, 1 Tx slot)	27.00	25.50
EDGE (8PSK, 2 Tx slots)	27.00	25.50

Mode	Average power(dBm)		
	WCDMA Band V	WCDMA Band II	WCDMA Band IV
AMR 12.2Kbps	24.00	24.00	24.00
RMC 12.2Kbps	24.00	24.00	24.00
HSDPA Subtest-1	24.00	24.00	24.00
HSDPA Subtest-2	24.00	24.00	24.00
HSDPA Subtest-3	23.50	23.50	23.50
HSDPA Subtest-4	23.50	23.50	23.50
DC-HSDPA Subtest-1	24.00	24.00	24.00
DC-HSDPA Subtest-2	24.00	24.00	24.00
DC-HSDPA Subtest-3	23.50	23.50	23.50
DC-HSDPA Subtest-4	23.50	23.50	23.50
HSUPA Subtest-1	24.00	24.00	24.00
HSUPA Subtest-2	23.00	23.00	23.00
HSUPA Subtest-3	23.00	23.00	23.00
HSUPA Subtest-4	23.00	23.00	23.00
HSUPA Subtest-5	24.00	24.00	24.00

LTE Band 12				
Average Power (dBm)				
Modulation	BW (MHz)	RB size	MPR	Target Power
QPSK	10	≤ 12	0	24.50
QPSK	10	> 12	1	23.50
16QAM	10	≤ 12	1	23.50
16QAM	10	> 12	2	22.50
QPSK	5	≤ 8	0	24.50
QPSK	5	> 8	1	23.50
16QAM	5	≤ 8	1	23.50
16QAM	5	> 8	2	22.50
QPSK	3	≤ 4	0	24.50
QPSK	3	> 4	1	23.50
16QAM	3	≤ 4	1	23.50
16QAM	3	> 4	2	22.50
QPSK	1.4	≤ 5	0	24.50
QPSK	1.4	> 5	1	23.50
16QAM	1.4	≤ 5	1	23.50
16QAM	1.4	> 5	2	22.50

LTE Band 17				
Average Power (dBm)				
Modulation	BW (MHz)	RB size	MPR	Target Power
QPSK	10	≤ 12	0	24.50
QPSK	10	> 12	1	23.50
16QAM	10	≤ 12	1	23.50
16QAM	10	> 12	2	22.50
QPSK	5	≤ 8	0	24.50
QPSK	5	> 8	1	23.50
16QAM	5	≤ 8	1	23.50
16QAM	5	> 8	2	22.50

LTE Band 13				
Average Power (dBm)				
Modulation	BW (MHz)	RB size	MPR	Target Power
QPSK	10	≤ 12	0	24.50
QPSK	10	> 12	1	23.50
16QAM	10	≤ 12	1	23.50
16QAM	10	> 12	2	22.50
QPSK	5	≤ 8	0	24.50
QPSK	5	> 8	1	23.50
16QAM	5	≤ 8	1	23.50
16QAM	5	> 8	2	22.50

LTE Band 5				
Average Power (dBm)				
Modulation	BW (MHz)	RB size	MPR	Target Power
QPSK	10	≤ 12	0	24.50
QPSK	10	> 12	1	23.50
16QAM	10	≤ 12	1	23.50
16QAM	10	> 12	2	22.50
QPSK	5	≤ 8	0	24.50
QPSK	5	> 8	1	23.50
16QAM	5	≤ 8	1	23.50
16QAM	5	> 8	2	22.50
QPSK	3	≤ 4	0	24.50
QPSK	3	> 4	1	23.50
16QAM	3	≤ 4	1	23.50
16QAM	3	> 4	2	22.50
QPSK	1.4	≤ 5	0	24.50
QPSK	1.4	> 5	1	23.50
16QAM	1.4	≤ 5	1	23.50
16QAM	1.4	> 5	2	22.50

LTE Band 4				
Average Power (dBm)				
Modulation	BW (MHz)	RB size	MPR	Target Power
QPSK	20	≤ 18	0	24.00
QPSK	20	> 18	1	23.00
16QAM	20	≤ 18	1	23.00
16QAM	20	> 18	2	22.00
QPSK	15	≤ 16	0	24.00
QPSK	15	> 16	1	23.00
16QAM	15	≤ 16	1	23.00
16QAM	15	> 16	2	22.00
QPSK	10	≤ 12	0	24.00
QPSK	10	> 12	1	23.00
16QAM	10	≤ 12	1	23.00
16QAM	10	> 12	2	22.00
QPSK	5	≤ 8	0	24.00
QPSK	5	> 8	1	23.00
16QAM	5	≤ 8	1	23.00
16QAM	5	> 8	2	22.00
QPSK	3	≤ 4	0	24.00
QPSK	3	> 4	1	23.00
16QAM	3	≤ 4	1	23.00
16QAM	3	> 4	2	22.00
QPSK	1.4	≤ 5	0	24.00
QPSK	1.4	> 5	1	23.00
16QAM	1.4	≤ 5	1	23.00
16QAM	1.4	> 5	2	22.00

LTE Band 2				
Average Power (dBm)				
Modulation	BW (MHz)	RB size	MPR	Target Power
QPSK	20	≤ 18	0	23.50
QPSK	20	> 18	1	22.50
16QAM	20	≤ 18	1	22.50
16QAM	20	> 18	2	21.50
QPSK	15	≤ 16	0	23.50
QPSK	15	> 16	1	22.50
16QAM	15	≤ 16	1	22.50
16QAM	15	> 16	2	21.50
QPSK	10	≤ 12	0	23.50
QPSK	10	> 12	1	22.50
16QAM	10	≤ 12	1	22.50
16QAM	10	> 12	2	21.50
QPSK	5	≤ 8	0	23.50
QPSK	5	> 8	1	22.50
16QAM	5	≤ 8	1	22.50
16QAM	5	> 8	2	21.50
QPSK	3	≤ 4	0	23.50
QPSK	3	> 4	1	22.50
16QAM	3	≤ 4	1	22.50
16QAM	3	> 4	2	21.50
QPSK	1.4	≤ 5	0	23.50
QPSK	1.4	> 5	1	22.50
16QAM	1.4	≤ 5	1	22.50
16QAM	1.4	> 5	2	21.50

LTE Band 30				
Average Power (dBm)				
Modulation	BW (MHz)	RB size	MPR	Target Power
QPSK	10	≤ 12	0	22.00
QPSK	10	> 12	1	21.00
16QAM	10	≤ 12	1	21.00
16QAM	10	> 12	2	20.00
QPSK	5	≤ 8	0	22.00
QPSK	5	> 8	1	21.00
16QAM	5	≤ 8	1	21.00
16QAM	5	> 8	2	20.00

LTE Band 7				
Average Power (dBm)				
Modulation	BW (MHz)	RB size	MPR	Target Power
QPSK	20	≤ 18	0	24.00
QPSK	20	> 18	1	23.00
16QAM	20	≤ 18	1	23.00
16QAM	20	> 18	2	22.00
QPSK	15	≤ 16	0	24.00
QPSK	15	> 16	1	23.00
16QAM	15	≤ 16	1	23.00
16QAM	15	> 16	2	22.00
QPSK	10	≤ 12	0	24.00
QPSK	10	> 12	1	23.00
16QAM	10	≤ 12	1	23.00
16QAM	10	> 12	2	22.00
QPSK	5	≤ 8	0	24.00
QPSK	5	> 8	1	23.00
16QAM	5	≤ 8	1	23.00
16QAM	5	> 8	2	22.00

Mode		Average Power (dBm)
2.4GHz	802.11b	14.50
	802.11g	12.00
	802.11n-HT20	9.50
	802.11n-HT40	10.00
5.2GHz	802.11a	13.00
	802.11n-HT20	11.50
	802.11n-HT40	11.50
	802.11ac-VHT20	8.50
	802.11ac-VHT40	8.50
	802.11ac-VHT80	8.50
5.8GHz	802.11a	10.50
	802.11n-HT20	10.50
	802.11n-HT40	10.00
	802.11ac-VHT20	9.00
	802.11ac-VHT40	9.00
	802.11ac-VHT80	8.50
Bluetooth v3.0 + EDR		2.50
Bluetooth v4.1 LE		2.50

4.3 General LTE SAR Test and Reporting Considerations

Summarized necessary items addressed in KDB 941225 D05 v02r03	
FCC ID	SRQ-ZTEA1P
Equipment Name	WCDMA/ LTE Multi-Mode Digital Mobile Phone
Operating Frequency Range of each LTE transmission band	LTE Band 2 : 1850.7 MHz ~ 1909.3 MHz LTE Band 4 : 1710.7 MHz ~ 1754.3 MHz LTE Band 5 : 824.7 MHz ~ 848.3 MHz LTE Band 7: 2502.5 MHz ~ 2567.5 MHz LTE Band 12: 699.7 MHz ~ 715.3 MHz LTE Band 13 : 779.5 MHz ~ 784.5 MHz LTE Band 17 : 706.5 MHz ~ 713.5 MHz LTE Band 30 : 2307.5 MHz ~2312.5 MHz
Channel Bandwidth	LTE Band 2:1.4MHz, 3MHz, 5MHz, 10MHz, 15MHz, 20MHz LTE Band 4:1.4MHz, 3MHz, 5MHz, 10MHz, 15MHz, 20MHz LTE Band 5:1.4MHz, 3MHz, 5MHz, 10MHz LTE Band 7: 5MHz, 10MHz, 15MHz, 20MHz LTE Band 12:1.4MHz, 3MHz, 5MHz, 10MHz LTE Band 13: 5MHz, 10MHz LTE Band 17: 5MHz, 10MHz LTE Band 30: 5MHz, 10MHz
uplink modulations used	QPSK and 16QAM
LTE Voice / Data requirements	Voice and Data
LTE MPR permanently built-in by design	**Table 6.2.3-1: Maximum Power Reduction (MPR) for Power Class 3** Modulation | Channel bandwidth / Transmission bandwidth (RB) | MPR (dB) 1.4 MHz | 3.0 MHz | 5 MHz | 10 MHz | 15 MHz | 20 MHz QPSK | > 5 | > 4 | > 8 | > 12 | > 16 | > 18 | ≤ 1 16 QAM | ≤ 5 | ≤ 4 | ≤ 8 | ≤ 12 | ≤ 16 | ≤ 18 | ≤ 1 16 QAM | > 5 | > 4 | > 8 | > 12 | > 16 | > 18 | ≤ 2
LTE A-MPR	In the base station simulator configuration, Network Setting value is set to NS_01 to disable A-MPR during SAR testing and the LTE SAR tests was transmitting on all TTI frames (Maximum TTI)
Spectrum plots for RB configuration	A properly configured base station simulator was used for the SAR and power measurement; therefore, spectrum plots for each RB allocation and offset configuration are not included in the SAR report.
LTE Carrier Aggregation Combinations	Inter-Band possible combinations as below page and the detail power verification please referred to page 49.
LTE Carrier Aggregation Additional Information	This device does not support full CA features on 3GPP Release 10. Is supports a maximum of 2 carriers in the downlink only. All uplink communications are identical to the Release 8 Specifications. Uplink communications are done on the PCC. Due to carrier capability, only the combinations listed above are supported. The following LTE Release features are not supported: Relay, HetNet, Enhanced MIMO, eICI, WiFi Offloading, MDH, eMBMA, Cross-Carrier Scheduling, Enhanced SC-FDMA.

LTE Carrier Aggregation Combinations																			
Inter-Band Combinations																			
(PCC) B2	(SCC) B12	(PCC) B12	(SCC) B2	(PCC) B2	(SCC) B17	(PCC) B17	(SCC) B2	(PCC) B4	(SCC) B12	(PCC) B12	(SCC) B4	(PCC) B4	(SCC) B17	(PCC) B17	(SCC) B4	(PCC) B2	(SCC) B29	(PCC) B4	(SCC) B29
20M+10M		10M+20M		10M+10M		10M+10M		20M+10M		10M+20M		10M+10M		10M+10M		20M+10M		20M+10M	
20M+5M		10M+15M		10M+5M		10M+5M		20M+5M		10M+15M		10M+5M		10M+5M		20M+5M		20M+5M	
20M+3M		10M+10M		5M+10M		5M+10M		20M+3M		10M+10M		5M+10M		5M+10M		20M+3M		20M+3M	
15M+10M		10M+5M		5M+5M		5M+5M		15M+10M		10M+5M		5M+5M		5M+5M		15M+10M		15M+10M	
15M+5M		5M+20M						15M+5M		10M+3M						15M+5M		15M+5M	
15M+3M		5M+15M						15M+3M		10M+1.4M						15M+3M		15M+3M	
10M+10M		5M+10M						10M+10M		5M+20M						10M+10M		10M+10M	
10M+5M		5M+5M						10M+5M		5M+15M						10M+5M		10M+5M	
10M+3M		3M+20M						10M+3M		5M+10M						10M+3M		10M+3M	
5M+10M		3M+15M						5M+10M		5M+5M						5M+10M		5M+10M	
5M+5M		3M+10M						5M+5M		5M+3M						5M+5M		5M+5M	
5M+3M		3M+5M						5M+3M		5M+1.4M						5M+3M		5M+3M	
								3M+10M		3M+20M									
								3M+5M		3M+15M									
								3M+3M		3M+10M									
								1.4M+10M		3M+5M									
								1.4M+5M		3M+3M									
								1.4M+3M		3M+1.4M									

Transmission (H, M, L) channel numbers and frequencies in each LTE band

LTE Band 12

	Bandwidth 1.4 MHz		Bandwidth 3 MHz		Bandwidth 5 MHz		Bandwidth 10 MHz	
	Ch. #	Freq. (MHz)	Ch. #	Freq. (MHz)	Ch. #	Freq. (MHz)	Ch. #	Freq. (MHz)
L	23017	699.7	23025	700.5	23035	701.5	23060	704
M	23095	707.5	23095	707.5	23095	707.5	23095	707.5
H	23173	715.3	23165	714.5	23155	713.5	23130	711

LTE Band 17

	Bandwidth 5 MHz		Bandwidth 10 MHz	
	Channel #	Freq.(MHz)	Channel #	Freq. (MHz)
L	23755	706.5	23780	709
M	23790	710	23790	710
H	23825	713.5	23800	711

LTE Band 13

	Bandwidth 5 MHz		Bandwidth 10 MHz	
	Channel #	Freq.(MHz)	Channel #	Freq.(MHz)
L	23205	779.5	23230	782
M	23230	782		
H	23255	784.5		

LTE Band 5

	Bandwidth 1.4 MHz		Bandwidth 3 MHz		Bandwidth 5 MHz		Bandwidth 10 MHz	
	Ch. #	Freq. (MHz)	Ch. #	Freq. (MHz)	Ch. #	Freq. (MHz)	Ch. #	Freq. (MHz)
L	20407	824.7	20415	825.5	20425	826.5	20450	829
M	20525	836.5	20525	836.5	20525	836.5	20525	836.5
H	20643	848.3	20635	847.5	20625	846.5	20600	844

LTE Band 4

	Bandwidth 1.4 MHz		Bandwidth 3 MHz		Bandwidth 5 MHz		Bandwidth 10 MHz		Bandwidth 15 MHz		Bandwidth 20 MHz	
	Ch. #	Freq. (MHz)	Ch. #	Freq. (MHz)	Ch. #	Freq. (MHz)	Ch. #	Freq. (MHz)	Ch. #	Freq. (MHz)	Ch. #	Freq. (MHz)
L	19957	1710.7	19965	1711.5	19975	1712.5	20000	1715	20025	1717.5	20050	1720
M	20175	1732.5	20175	1732.5	20175	1732.5	20175	1732.5	20175	1732.5	20175	1732.5
H	20393	1754.3	20385	1753.5	20375	1752.5	20350	1750	20325	1747.5	20300	1745

LTE Band 2

	Bandwidth 1.4 MHz		Bandwidth 3 MHz		Bandwidth 5 MHz		Bandwidth 10 MHz		Bandwidth 15 MHz		Bandwidth 20 MHz	
	Ch. #	Freq. (MHz)	Ch. #	Freq. (MHz)	Ch. #	Freq. (MHz)	Ch. #	Freq. (MHz)	Ch. #	Freq. (MHz)	Ch. #	Freq. (MHz)
L	18607	1850.7	18615	1851.5	18625	1852.5	18650	1855	18675	1857.5	18700	1860
M	18900	1880	18900	1880	18900	1880	18900	1880	18900	1880	18900	1880
H	19193	1909.3	19185	1908.5	19175	1907.5	19150	1905	19125	1902.5	19100	1900

LTE Band 7

	Bandwidth 5 MHz		Bandwidth 10 MHz		Bandwidth 15 MHz		Bandwidth 20 MHz	
	Ch. #	Freq. (MHz)	Ch. #	Freq. (MHz)	Ch. #	Freq. (MHz)	Ch. #	Freq. (MHz)
L	20775	2502.5	20800	2505	20825	2507.5	20850	2510
M	21100	2535	21100	2535	21100	2535	21100	2535
H	21425	2567.5	21400	2565	21375	2562.5	21350	2560

LTE Band 30

	Bandwidth 5 MHz		Bandwidth 10 MHz	
	Channel #	Freq.(MHz)	Channel #	Freq. (MHz)
L	27685	2307.5	27710	2310
M	27710	2310		
H	27735	2312.5		

5. RF Exposure Limits

5.1 Uncontrolled Environment

Uncontrolled Environments are defined as locations where there is the exposure of individuals who have no knowledge or control of their exposure. The general population/uncontrolled exposure limits are applicable to situations in which the general public may be exposed or in which persons who are exposed as a consequence of their employment may not be made fully aware of the potential for exposure or cannot exercise control over their exposure. Members of the general public would come under this category when exposure is not employment-related; for example, in the case of a wireless transmitter that exposes persons in its vicinity.

5.2 Controlled Environment

Controlled Environments are defined as locations where there is exposure that may be incurred by persons who are aware of the potential for exposure, (i.e. as a result of employment or occupation). In general, occupational/controlled exposure limits are applicable to situations in which persons are exposed as a consequence of their employment, who have been made fully aware of the potential for exposure and can exercise control over their exposure. The exposure category is also applicable when the exposure is of a transient nature due to incidental passage through a location where the exposure levels may be higher than the general population/uncontrolled limits, but the exposed person is fully aware of the potential for exposure and can exercise control over his or her exposure by leaving the area or by some other appropriate means.

Limits for Occupational/Controlled Exposure (W/kg)

Whole-Body	Partial-Body	Hands, Wrists, Feet and Ankles
0.4	8.0	20.0

Limits for General Population/Uncontrolled Exposure (W/kg)

Whole-Body	Partial-Body	Hands, Wrists, Feet and Ankles
0.08	1.6	4.0

1. Whole-Body SAR is averaged over the entire body, partial-body SAR is averaged over any 1gram of tissue defined as a tissue volume in the shape of a cube. SAR for hands, wrists, feet and ankles is averaged over any 10 grams of tissue defined as a tissue volume in the shape of a cube.

6. Specific Absorption Rate (SAR)

6.1 Introduction

SAR is related to the rate at which energy is absorbed per unit mass in an object exposed to a radio field. The SAR distribution in a biological body is complicated and is usually carried out by experimental techniques or numerical modeling. The standard recommends limits for two tiers of groups, occupational/controlled and general population/uncontrolled, based on a person's awareness and ability to exercise control over his or her exposure. In general, occupational/controlled exposure limits are higher than the limits for general population/uncontrolled.

6.2 SAR Definition

The SAR definition is the time derivative (rate) of the incremental energy (dW) absorbed by (dissipated in) an incremental mass (dm) contained in a volume element (dv) of a given density (ρ). The equation description is as below:

$$\mathbf{SAR} = \frac{\mathbf{d}}{\mathbf{dt}}\left(\frac{\mathbf{dW}}{\mathbf{dm}}\right) = \frac{\mathbf{d}}{\mathbf{dt}}\left(\frac{\mathbf{dW}}{\boldsymbol{\rho}\mathbf{dv}}\right)$$

SAR is expressed in units of Watts per kilogram (W/kg)

$$\mathbf{SAR} = \frac{\boldsymbol{\sigma}|\mathbf{E}|^{\mathbf{2}}}{\boldsymbol{\rho}}$$

Where: σ is the conductivity of the tissue, ρ is the mass density of the tissue and E is the RMS electrical field strength.

7. System Description and Setup

The DASY system used for performing compliance tests consists of the following items:

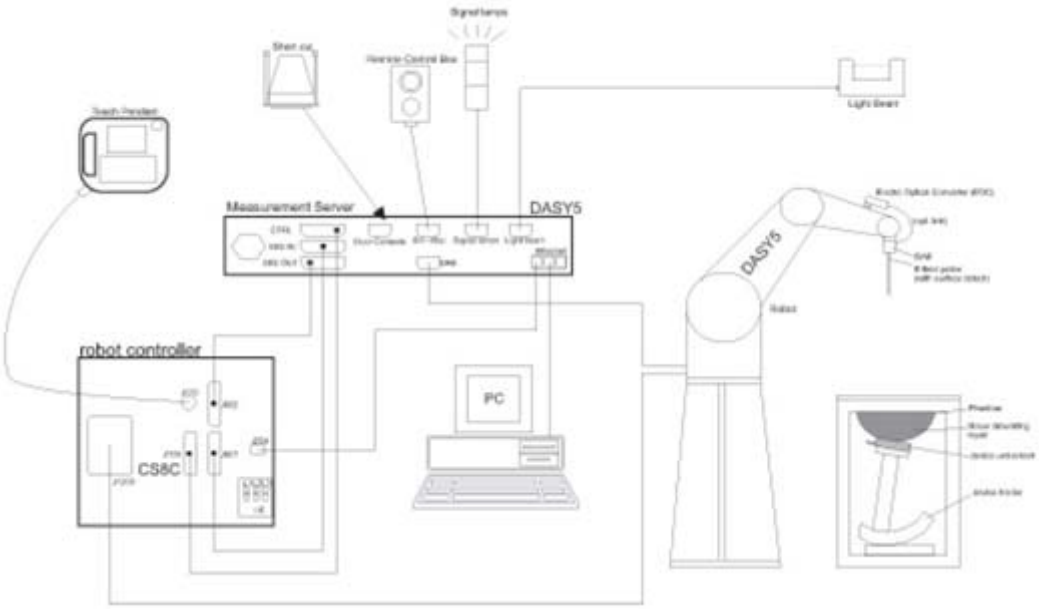

- A standard high precision 6-axis robot with controller, teach pendant and software. An arm extension for accommodating the data acquisition electronics (DAE).
- An isotropic Field probe optimized and calibrated for the targeted measurement.
- A data acquisition electronics (DAE) which performs the signal amplification, signal multiplexing, AD-conversion, offset measurements, mechanical surface detection, collision detection, etc. The unit is battery powered with standard or rechargeable batteries. The signal is optically transmitted to the EOC.
- The Electro-optical converter (EOC) performs the conversion from optical to electrical signals for the digital communication to the DAE. To use optical surface detection, a special version of the EOC is required. The EOC signal is transmitted to the measurement server.
- The function of the measurement server is to perform the time critical tasks such as signal filtering, control of the robot operation and fast movement interrupts.
- The Light Beam used is for probe alignment. This improves the (absolute) accuracy of the probe positioning.
- A computer running WinXP or Win7 and the DASY5 software.
- Remote control and teach pendant as well as additional circuitry for robot safety such as warning lamps, etc.
- The phantom, the device holder and other accessories according to the targeted measurement.

8. Measurement Procedures

The measurement procedures are as follows:

<Conducted power measurement>

(a) For WWAN power measurement, use base station simulator to configure EUT WWAN transmission in conducted connection with RF cable, at maximum power in each supported wireless interface and frequency band.
(b) Read the WWAN RF power level from the base station simulator.
(c) For WLAN/BT power measurement, use engineering software to configure EUT WLAN/BT continuously transmission, at maximum RF power in each supported wireless interface and frequency band
(d) Connect EUT RF port through RF cable to the power meter, and measure WLAN/BT output power

<SAR measurement>

(a) Use base station simulator to configure EUT WWAN transmission in radiated connection, and engineering software to configure EUT WLAN/BT continuously transmission, at maximum RF power, in the highest power channel.
(b) Place the EUT in the positions as Appendix D demonstrates.
(c) Set scan area, grid size and other setting on the DASY software.
(d) Measure SAR results for the highest power channel on each testing position.
(e) Find out the largest SAR result on these testing positions of each band
(f) Measure SAR results for other channels in worst SAR testing position if the reported SAR of highest power channel is larger than 0.8 W/kg

According to the test standard, the recommended procedure for assessing the peak spatial-average SAR value consists of the following steps:

(a) Power reference measurement
(b) Area scan
(c) Zoom scan
(d) Power drift measurement

8.1 Spatial Peak SAR Evaluation

The procedure for spatial peak SAR evaluation has been implemented according to the test standard. It can be conducted for 1g and 10g, as well as for user-specific masses. The DASY software includes all numerical procedures necessary to evaluate the spatial peak SAR value.

The base for the evaluation is a "cube" measurement. The measured volume must include the 1g and 10g cubes with the highest averaged SAR values. For that purpose, the center of the measured volume is aligned to the interpolated peak SAR value of a previously performed area scan.

The entire evaluation of the spatial peak values is performed within the post-processing engine (SEMCAD). The system always gives the maximum values for the 1g and 10g cubes. The algorithm to find the cube with highest averaged SAR is divided into the following stages:

(a) Extraction of the measured data (grid and values) from the Zoom Scan
(b) Calculation of the SAR value at every measurement point based on all stored data (A/D values and measurement parameters)
(c) Generation of a high-resolution mesh within the measured volume
(d) Interpolation of all measured values form the measurement grid to the high-resolution grid
(e) Extrapolation of the entire 3-D field distribution to the phantom surface over the distance from sensor to surface
(f) Calculation of the averaged SAR within masses of 1g and 10g

8.2 Power Reference Measurement

The Power Reference Measurement and Power Drift Measurements are for monitoring the power drift of the device under test in the batch process. The minimum distance of probe sensors to surface determines the closest measurement point to phantom surface. This distance cannot be smaller than the distance of sensor calibration points to probe tip as defined in the probe properties.

8.3 Area Scan

The area scan is used as a fast scan in two dimensions to find the area of high field values, before doing a fine measurement around the hot spot. The sophisticated interpolation routines implemented in DASY software can find the maximum found in the scanned area, within a range of the global maximum. The range (in dB0 is specified in the standards for compliance testing. For example, a 2 dB range is required in IEEE standard 1528 and IEC 62209 standards, whereby 3 dB is a requirement when compliance is assessed in accordance with the ARIB standard (Japan), if only one zoom scan follows the area scan, then only the absolute maximum will be taken as reference. For cases where multiple maximums are detected, the number of zoom scans has to be increased accordingly.

Area scan parameters extracted from FCC KDB 865664 D01v01r03 SAR measurement 100 MHz to 6 GHz.

	≤ 3 GHz	> 3 GHz
Maximum distance from closest measurement point (geometric center of probe sensors) to phantom surface	5 ± 1 mm	½·δ·ln(2) ± 0.5 mm
Maximum probe angle from probe axis to phantom surface normal at the measurement location	30° ± 1°	20° ± 1°
Maximum area scan spatial resolution: Δx_{Area}, Δy_{Area}	≤ 2 GHz: ≤ 15 mm 2 – 3 GHz: ≤ 12 mm	3 – 4 GHz: ≤ 12 mm 4 – 6 GHz: ≤ 10 mm
	When the x or y dimension of the test device, in the measurement plane orientation, is smaller than the above, the measurement resolution must be ≤ the corresponding x or y dimension of the test device with at least one measurement point on the test device.	

8.4 Zoom Scan

Zoom scans are used assess the peak spatial SAR values within a cubic averaging volume containing 1 gram and 10 gram of simulated tissue. The zoom scan measures points (refer to table below) within a cube shoes base faces are centered on the maxima found in a preceding area scan job within the same procedure. When the measurement is done, the zoom scan evaluates the averaged SAR for 1 gram and 10 gram and displays these values next to the job's label.

Zoom scan parameters extracted from FCC KDB 865664 D01v01r03 SAR measurement 100 MHz to 6 GHz.

			≤ 3 GHz	> 3 GHz
Maximum zoom scan spatial resolution: Δx_{Zoom}, Δy_{Zoom}			≤ 2 GHz: ≤ 8 mm 2 – 3 GHz: ≤ 5 mm*	3 – 4 GHz: ≤ 5 mm* 4 – 6 GHz: ≤ 4 mm*
Maximum zoom scan spatial resolution, normal to phantom surface	uniform grid: $\Delta z_{Zoom}(n)$		≤ 5 mm	3 – 4 GHz: ≤ 4 mm 4 – 5 GHz: ≤ 3 mm 5 – 6 GHz: ≤ 2 mm
	graded grid	$\Delta z_{Zoom}(1)$: between 1st two points closest to phantom surface	≤ 4 mm	3 – 4 GHz: ≤ 3 mm 4 – 5 GHz: ≤ 2.5 mm 5 – 6 GHz: ≤ 2 mm
		$\Delta z_{Zoom}(n>1)$: between subsequent points	$\leq 1.5 \cdot \Delta z_{Zoom}(n-1)$	
Minimum zoom scan volume	x, y, z		≥ 30 mm	3 – 4 GHz: ≥ 28 mm 4 – 5 GHz: ≥ 25 mm 5 – 6 GHz: ≥ 22 mm

Note: δ is the penetration depth of a plane-wave at normal incidence to the tissue medium; see draft standard IEEE P1528-2011 for details.

* When zoom scan is required and the *reported* SAR from the *area scan based 1-g SAR estimation* procedures of KDB 447498 is ≤ 1.4 W/kg, ≤ 8 mm, ≤ 7 mm and ≤ 5 mm zoom scan resolution may be applied, respectively, for 2 GHz to 3 GHz, 3 GHz to 4 GHz and 4 GHz to 6 GHz.

8.5 Volume Scan Procedures

The volume scan is used for assess overlapping SAR distributions for antennas transmitting in different frequency bands. It is equivalent to an oversized zoom scan used in standalone measurements. The measurement volume will be used to enclose all the simultaneous transmitting antennas. For antennas transmitting simultaneously in different frequency bands, the volume scan is measured separately in each frequency band. In order to sum correctly to compute the 1g aggregate SAR, the EUT remain in the same test position for all measurements and all volume scan use the same spatial resolution and grid spacing. When all volume scan were completed, the software, SEMCAD postprocessor can combine and subsequently superpose these measurement data to calculating the multiband SAR.

8.6 Power Drift Monitoring

All SAR testing is under the EUT install full charged battery and transmit maximum output power. In DASY measurement software, the power reference measurement and power drift measurement procedures are used for monitoring the power drift of EUT during SAR test. Both these procedures measure the field at a specified reference position before and after the SAR testing. The software will calculate the field difference in dB. If the power drifts more than 5%, the SAR will be retested.

9. Test Equipment List

Manufacturer	Name of Equipment	Type/Model	Serial Number	Calibration	
				Last Cal.	Due Date
SPEAG	750MHz System Validation Kit	D750V3	1132	Jan. 06, 2015	Jan. 05, 2016
SPEAG	835MHz System Validation Kit	D835V2	499	Mar. 20, 2015	Mar. 19, 2016
SPEAG	1750MHz System Validation Kit	D1750V2	1068	Nov. 14, 2014	Nov. 13, 2015
SPEAG	1900MHz System Validation Kit	D1900V2	5d041	Mar. 24, 2015	Mar. 23, 2016
SPEAG	2300MHz System Validation Kit	D2300V2	1006	Jan. 27, 2015	Jan. 26, 2016
SPEAG	2600MHz System Validation Kit	D2600V2	1070	Nov. 19, 2014	Nov. 18, 2015
SPEAG	2450MHz System Validation Kit	D2450V2	840	Nov. 19, 2014	Nov. 18, 2015
SPEAG	5000MHz System Validation Kit	D5GHzV2	1113	Nov. 24, 2014	Nov. 23, 2015
SPEAG	Data Acquisition Electronics	DAE4	778	Aug. 21, 2014	Aug. 20, 2015
SPEAG	Data Acquisition Electronics	DAE4	1388	Sep. 24, 2014	Sep. 23, 2015
SPEAG	Data Acquisition Electronics	DAE4	1279	Jul. 23, 2014	Jul. 22, 2015
SPEAG	Data Acquisition Electronics	DAE4	916	Dec. 29, 2014	Dec. 28, 2015
SPEAG	Data Acquisition Electronics	DAE4	1399	Nov. 13, 2014	Nov. 12, 2015
SPEAG	Data Acquisition Electronics	DAE4	905	Jul. 14, 2014	Jul. 13, 2015
SPEAG	Dosimetric E-Field Probe	ES3DV3	3270	Sep. 26, 2014	Sep. 25, 2015
SPEAG	Dosimetric E-Field Probe	EX3DV4	3697	Sep. 29, 2014	Sep. 28, 2015
SPEAG	Dosimetric E-Field Probe	EX3DV4	3954	Nov. 21, 2014	Nov. 20, 2015
SPEAG	Dosimetric E-Field Probe	EX3DV4	3578	Mar. 31, 2015	Mar. 30, 2016
SPEAG	Dosimetric E-Field Probe	EX3DV4	3955	Nov. 21, 2014	Nov. 20, 2015
SPEAG	Dosimetric E-Field Probe	EX3DV4	3801	Jun. 18, 2014	Jun. 17, 2015
SPEAG	Dosimetric E-Field Probe	EX3DV4	7350	Jan. 08, 2015	Jan. 07, 2016
SPEAG	SAM Twin Phantom	QD 000 P40 CB	TP-1477	NCR	NCR
SPEAG	SAM Twin Phantom	QD 000 P40 CB	TP-1479	NCR	NCR
SPEAG	Phone Positioner	N/A	N/A	NCR	NCR
ARRA	Power Divider	A3200-2	N/A	NA	NA
R&S	CBT BLUETOOTH TESTER	CBT	100783	Aug. 11, 2014	Aug. 10, 2015
Wisewind	Thermometer	ETP-101	TM560	Oct. 21, 2014	Oct. 20, 2015
WonDer	Thermometer	WD-5015	TM685	Oct. 21, 2014	Oct. 20, 2015
Wisewind	Thermometer	HTC-1	TM642	Oct. 21, 2014	Oct. 20, 2015
Wisewind	Thermometer	HTC-1	TM281	Oct. 21, 2014	Oct. 20, 2015
H.M.IRIS	Thermometer	TH-08	TM658	Oct. 21, 2014	Oct. 20, 2015
Anritsu	Radio Communication Analyzer	MT8820C	6201074414	Feb. 06, 2015	Feb. 05, 2016
Agilent	Wireless Communication Test Set	E5515C	MY50266977	May 14, 2015	May 13, 2016
SPEAG	Device Holder	N/A	N/A	N/A	N/A
Agilent	Signal Generator	N5181A	MY50145381	Dec. 11, 2014	Dec. 10, 2015
R&S	Signal Generator	SMJ 100A	101375	Feb. 12, 2015	Feb. 11, 2016
R&S	Signal Generator	SMBV100A	258305	Jan. 23, 2015	Jan. 22, 2016
Agilent	ENA Network Analyzer	E5071C	MY46316648	Feb. 11, 2015	Feb. 10, 2016
Agilent	ENA Series Network Analyzer	E5071C	MY46111157	May 04, 2015	May 03, 2016
SPEAG	Dielectric Probe Kit	DAK-3.5	1126	Jul. 22, 2014	Jul. 21, 2015
SPEAG	Dielectric Probe Kit	DAK-3.5	1138	Nov. 18, 2014	Nov. 17, 2015
Agilent	Dielectric Probe Kit	85070E	MY44300475	NCR	NCR
Anritsu	Power Meter	ML2495A	1419002	May 13, 2015	May 12, 2016
Anritsu	Power Meter	ML2495A	1349001	Dec. 03, 2014	Dec. 02, 2015
Anritsu	Power Meter	ML2495A	1005002	Jan. 23, 2015	Jan. 22, 2016
Anritsu	Power Sensor	MA2411B	1339124	May 13, 2015	May 12, 2016
Anritsu	Power Sensor	MA2411B	1306099	Dec. 03, 2014	Dec. 02, 2015
Anritsu	Power Senor	MA2411B	0917070	Jan. 23, 2015	Jan. 22, 2016

R&S	Spectrum Analyzer	FSP 7	101131	Jul. 10, 2014	Jul. 09, 2015
R&S	Spectrum Analyzer	FSP40	100319	Oct. 28, 2014	Oct. 27, 2015
Anritsu	Spectrum Analyzer	MS2830A	6201396378	Jun. 03, 2014	Jun. 02, 2015
Anritsu	Spectrum Analyzer	MS2830A	6201396378	Jun. 02, 2015	Jun. 01, 2016
Agilent	Dual Directional Coupler	778D	50422	Note 1	
Woken	Attenuator 1	WK0602-XX	N/A	Note 1	
PE	Attenuator 2	PE7005-10	N/A	Note 1	
PE	Attenuator 3	PE7005- 3	N/A	Note 1	
AR	Power Amplifier	5S1G4M2	0328767	Note 1	
Mini-Circuits	Power Amplifier	ZVE-3W	162601250	Note 1	

General Note:

1. Prior to system verification and validation, the path loss from the signal generator to the system check source and the power meter, which includes the amplifier, cable, attenuator and directional coupler, was measured by the network analyzer. The reading of the power meter was offset by the path loss difference between the path to the power meter and the path to the system check source to monitor the actual power level fed to the system check source.

10. System Verification

10.1 Tissue Verification

The following tissue formulations are provided for reference only as some of the parameters have not been thoroughly verified. The composition of ingredients may be modified accordingly to achieve the desired target tissue parameters required for routine SAR evaluation.

Frequency (MHz)	Water (%)	Sugar (%)	Cellulose (%)	Salt (%)	Preventol (%)	DGBE (%)	Conductivity (σ)	Permittivity (εr)
For Head								
750	41.1	57.0	0.2	1.4	0.2	0	0.89	41.9
835	40.3	57.9	0.2	1.4	0.2	0	0.90	41.5
1800, 1900, 2000	55.2	0	0	0.3	0	44.5	1.40	40.0
2450	55.0	0	0	0	0	45.0	1.80	39.2
2600	54.8	0	0	0.1	0	45.1	1.96	39.0
For Body								
750	51.7	47.2	0	0.9	0.1	0	0.96	55.5
835	50.8	48.2	0	0.9	0.1	0	0.97	55.2
1800, 1900, 2000	70.2	0	0	0.4	0	29.4	1.52	53.3
2450	68.6	0	0	0	0	31.4	1.95	52.7
2600	68.1	0	0	0.1	0	31.8	2.16	52.5

Simulating Liquid for 5GHz, Manufactured by SPEAG

Ingredients	(% by weight)
Water	64~78%
Mineral oil	11~18%
Emulsifiers	9~15%
Additives and Salt	2~3%

<Tissue Dielectric Parameter Check Results>

Frequency (MHz)	Tissue Type	Liquid Temp. (℃)	Conductivity (σ)	Permittivity (ε_r)	Conductivity Target (σ)	Permittivity Target (ε_r)	Delta (σ) (%)	Delta (ε_r) (%)	Limit (%)	Date
750	Head	22.3	0.898	43.176	0.89	41.90	0.90	3.05	±5	2015/6/4
750	Body	22.5	0.968	57.868	0.96	55.50	0.83	4.27	±5	2015/6/1
750	Body	22.5	0.968	57.868	0.96	55.50	0.83	4.27	±5	2015/6/1
835	Head	22.3	0.896	41.887	0.90	41.50	-0.44	0.93	±5	2015/6/3
835	Head	22.3	0.896	41.887	0.90	41.50	-0.44	0.93	±5	2015/6/3
835	Body	22.4	0.983	56.091	0.97	55.20	1.34	1.61	±5	2015/5/31
1750	Head	22.7	1.366	39.761	1.37	40.10	-0.29	-0.85	±5	2015/6/2
1750	Body	22.6	1.529	52.221	1.49	53.40	2.62	-2.21	±5	2015/5/31
1900	Head	22.3	1.408	40.014	1.40	40.00	0.57	0.04	±5	2015/6/1
1900	Body	22.5	1.542	54.917	1.52	53.30	1.45	3.03	±5	2015/5/29
1900	Body	22.6	1.540	54.388	1.52	53.30	1.32	2.04	±5	2015/5/30
2300	Head	22.3	1.683	39.129	1.67	39.50	0.78	-0.94	±5	2015/6/4
2300	Body	22.3	1.824	53.123	1.81	52.90	0.77	0.42	±5	2015/6/5
2600	Head	22.4	2.007	37.833	1.96	39.00	2.40	-2.99	±5	2015/5/29
2600	Body	22.5	2.234	51.362	2.16	52.50	3.43	-2.17	±5	2015/5/30
2450	Head	22.8	1.817	39.204	1.80	39.20	0.94	0.01	±5	2015/6/6
2450	Body	22.5	1.943	51.453	1.95	52.70	-0.36	-2.37	±5	2015/6/6
5200	Head	22.7	4.793	35.493	4.66	36.00	2.85	-1.41	±5	2015/6/12
5200	Body	22.6	5.162	48.492	5.30	49.00	-2.60	-1.04	±5	2015/6/14
5800	Head	22.7	5.395	34.416	5.27	35.30	2.37	-2.50	±5	2015/6/12
5800	Body	22.6	5.976	47.158	6.00	48.20	-0.40	-2.16	±5	2015/6/14

10.2 System Performance Check Results

Comparing to the original SAR value provided by SPEAG, the verification data should be within its specification of 10 %. Below table shows the target SAR and measured SAR after normalized to 1W input power. The table below indicates the system performance check can meet the variation criterion and the plots can be referred to Appendix A of this report.

Date	Frequency (MHz)2	Tissue Type2	Input Power (mW)	Dipole S/N	Probe S/N	DAE S/N	Measured 1g SAR (W/kg)	Targeted 1g SAR (W/kg)	Normalized 1g SAR (W/kg)	Deviation (%)
2015/6/4	750	Head	250	1132	3954	1279	2.09	7.94	8.36	5.29
2015/6/1	750	Body	250	1132	3578	916	2.05	8.46	8.20	-3.07
2015/6/1	750	Body	250	1132	3697	1388	2.06	8.46	8.24	-2.60
2015/6/3	835	Head	250	499	3270	778	2.26	9.20	9.04	-1.74
2015/6/3	835	Head	250	499	3955	1399	2.27	9.20	9.08	-1.30
2015/5/31	835	Body	250	499	3578	916	2.18	9.30	8.72	-6.24
2015/6/2	1750	Head	250	1068	3697	1388	8.89	36.80	35.56	-3.37
2015/5/31	1750	Body	250	1068	3578	916	8.82	38.00	35.28	-7.16
2015/6/1	1900	Head	250	5d041	3697	1388	9.90	40.00	39.60	-1.00
2015/5/29	1900	Body	250	5d041	3955	1399	10.00	39.80	40.00	0.50
2015/5/30	1900	Body	250	5d041	3578	916	9.50	39.80	38.00	-4.52
2015/6/4	2300	Head	250	1006	3578	916	11.80	49.10	47.20	-3.87
2015/6/5	2300	Body	250	1006	3578	916	12.20	48.50	48.80	0.62
2015/5/29	2600	Head	250	1070	3578	916	13.70	56.90	54.80	-3.69
2015/5/30	2600	Body	250	1070	3578	916	13.90	55.30	55.60	0.54
2015/6/6	2450	Head	250	840	3801	905	13.20	52.30	52.80	0.96
2015/6/6	2450	Body	250	840	3801	905	12.50	51.00	50.00	-1.96
2015/6/12	5200	Head	100	1113	7350	905	8.01	80.00	80.10	0.12
2015/6/14	5200	Body	100	1113	7350	905	7.06	74.90	70.60	-5.74
2015/6/12	5800	Head	100	1113	7350	905	7.70	78.50	77.00	-1.91
2015/6/14	5800	Body	100	1113	7350	905	7.04	75.40	70.40	-6.63

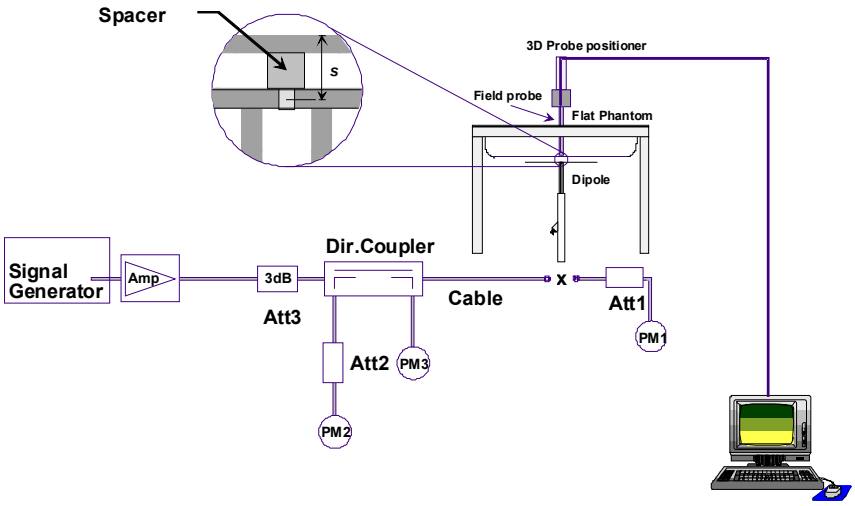

Fig 8.3.1 System Performance Check Setup

Fig 8.3.2 Setup Photo

11. RF Exposure Positions

11.1 Ear and handset reference point

Figure 9.1.1 shows the front, back, and side views of the SAM phantom. The center-of-mouth reference point is labeled “M,” the left ear reference point (ERP) is marked “LE,” and the right ERP is marked “RE.” Each ERP is 15 mm along the B-M (back-mouth) line behind the entrance-to-ear-canal (EEC) point, as shown in Figure 9.1.2 The Reference Plane is defined as passing through the two ear reference points and point M. The line N-F (neck-front), also called the reference pivoting line, is normal to the Reference Plane and perpendicular to both a line passing through RE and LE and the B-M line (see Figure 9.1.3). Both N-F and B-M lines should be marked on the exterior of the phantom shell to facilitate handset positioning. Posterior to the N-F line the ear shape is a flat surface with 6 mm thickness at each ERP, and forward of the N-F line the ear is truncated, as illustrated in Figure 9.1.2. The ear truncation is introduced to preclude the ear lobe from interfering with handset tilt, which could lead to unstable positioning at the cheek.

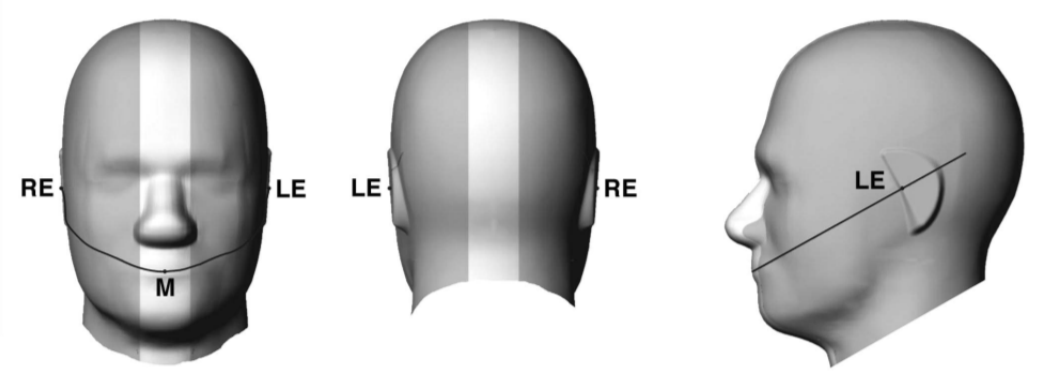

Fig 9.1.1 Front, back, and side views of SAM twin phantom

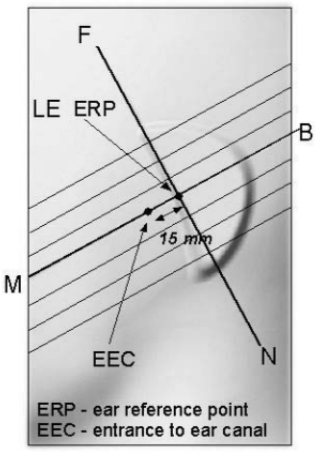

Fig 9.1.2 Close-up side view of phantom showing the ear region.

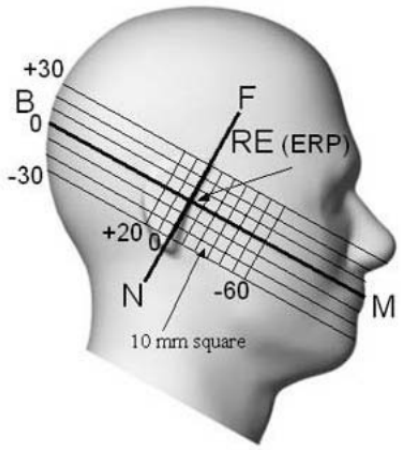

Fig 9.1.3 Side view of the phantom showing relevant markings and seven cross-sectional plane locations

11.2 Definition of the cheek position

1. Ready the handset for talk operation, if necessary. For example, for handsets with a cover piece (flip cover), open the cover. If the handset can transmit with the cover closed, both configurations must be tested.
2. Define two imaginary lines on the handset—the vertical centerline and the horizontal line. The vertical centerline passes through two points on the front side of the handset—the midpoint of the width wt of the handset at the level of the acoustic output (point A in Figure 9.2.1 and Figure 9.2.2), and the midpoint of the width wb of the bottom of the handset (point B). The horizontal line is perpendicular to the vertical centerline and passes through the center of the acoustic output (see Figure 9.2.1). The two lines intersect at point A. Note that for many handsets, point A coincides with the center of the acoustic output; however, the acoustic output may be located elsewhere on the horizontal line. Also note that the vertical centerline is not necessarily parallel to the front face of the handset (see Figure 9.2.2), especially for clamshell handsets, handsets with flip covers, and other irregularly-shaped handsets.
3. Position the handset close to the surface of the phantom such that point A is on the (virtual) extension of the line passing through points RE and LE on the phantom (see Figure 9.2.3), such that the plane defined by the vertical centerline and the horizontal line of the handset is approximately parallel to the sagittal plane of the phantom.
4. Translate the handset towards the phantom along the line passing through RE and LE until handset point A touches the pinna at the ERP.
5. While maintaining the handset in this plane, rotate it around the LE-RE line until the vertical centerline is in the plane normal to the plane containing B-M and N-F lines, i.e., the Reference Plane.
6. Rotate the handset around the vertical centerline until the handset (horizontal line) is parallel to the N-F line.
7. While maintaining the vertical centerline in the Reference Plane, keeping point A on the line passing through RE and LE, and maintaining the handset contact with the pinna, rotate the handset about the N-F line until any point on the handset is in contact with a phantom point below the pinna on the cheek. See Figure 9.2.3. The actual rotation angles should be documented in the test report.

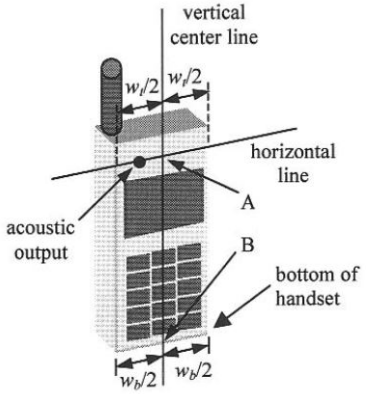

Fig 9.2.1 Handset vertical and horizontal reference lines—"fixed case

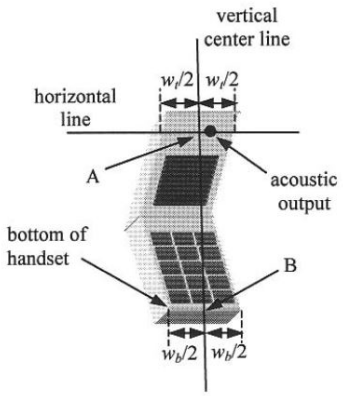

Fig 9.2.2 Handset vertical and horizontal reference lines—"clam-shell case"

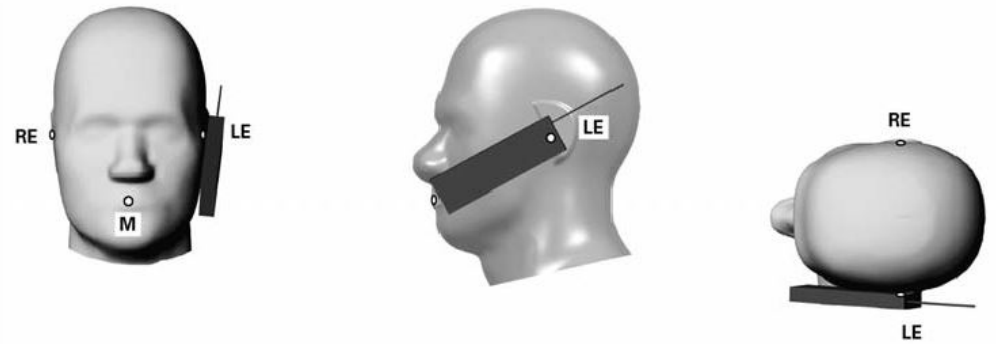

Fig 9.2.3 cheek or touch position. The reference points for the right ear (RE), left ear (LE), and mouth (M), which establish the Reference Plane for handset positioning, are indicated.

11.3 Definition of the tilt position

1. Ready the handset for talk operation, if necessary. For example, for handsets with a cover piece (flip cover), open the cover. If the handset can transmit with the cover closed, both configurations must be tested.
2. While maintaining the orientation of the handset, move the handset away from the pinna along the line passing through RE and LE far enough to allow a rotation of the handset away from the cheek by 15°.
3. Rotate the handset around the horizontal line by 15°.
4. While maintaining the orientation of the handset, move the handset towards the phantom on the line passing through RE and LE until any part of the handset touches the ear. The tilt position is obtained when the contact point is on the pinna. See Figure 9.3.1. If contact occurs at any location other than the pinna, e.g., the antenna at the back of the phantom head, the angle of the handset should be reduced. In this case, the tilt position is obtained if any point on the handset is in contact with the pinna and a second point

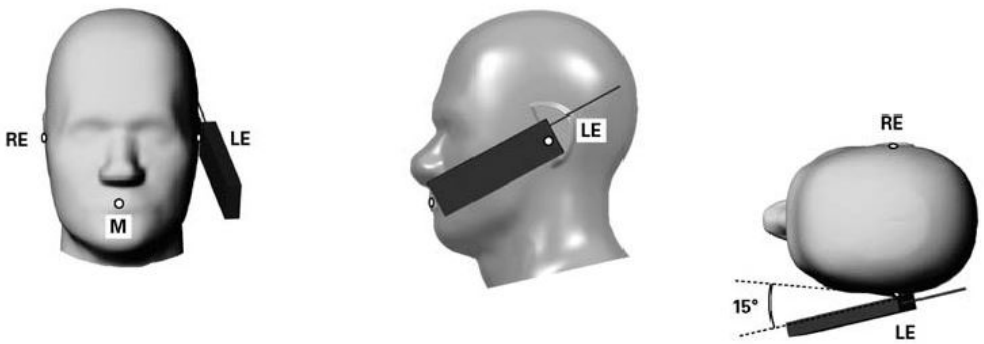

Fig 9.3.1 Tilt position. The reference points for the right ear (RE), left ear (LE), and mouth (M), which define the Reference Plane for handset positioning, are indicated.

11.4 Body Worn Accessory

Body-worn operating configurations are tested with the belt-clips and holsters attached to the device and positioned against a flat phantom in a normal use configuration (see Figure 9.4). Per KDB 648474 D04v01r02, body-worn accessory exposure is typically related to voice mode operations when handsets are carried in body-worn accessories. The body-worn accessory procedures in FCC KDB 447498 D01v05r02 should be used to test for body-worn accessory SAR compliance, without a headset connected to it. This enables the test results for such configuration to be compatible with that required for hotspot mode when the body-worn accessory test separation distance is greater than or equal to that required for hotspot mode, when applicable. When the reported SAR for body-worn accessory, measured without a headset connected to the handset is < 1.2 W/kg, the highest reported SAR configuration for that wireless mode and frequency band should be repeated for that body-worn accessory with a handset attached to the handset.

Accessories for body-worn operation configurations are divided into two categories: those that do not contain metallic components and those that do contain metallic components and those that do contain metallic components. When multiple accessories that do not contain metallic components are supplied with the device, the device is tested with only the accessory that dictates the closest spacing to the body. Then multiple accessories that contain metallic components are test with the device with each accessory. If multiple accessories share an identical metallic component (i.e. the same metallic belt-chip used with different holsters with no other metallic components) only the accessory that dictates the closest spacing to the body is tested.

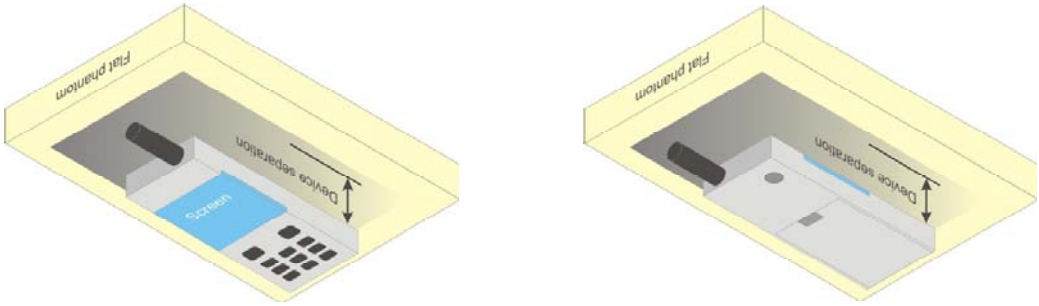

Fig 9.4 Body Worn Position

11.5 Wireless Router

Some battery-operated handsets have the capability to transmit and receive user through simultaneous transmission of WIFI simultaneously with a separate licensed transmitter. The FCC has provided guidance in FCC HDB Publication 941225 D06 v02 where SAR test considerations for handsets (L x W ≥ 9 cm x 5 cm) are based on a composite test separation distance of 10mm from the front, back and edges of the device containing transmitting antennas within 2.5cm of their edges, determined form general mixed use conditions for this type of devices. Since the hotspot SAR results may overlap with the body-worn accessory SAR requirements, the more conservative configurations can be considered, thus excluding some body-worn accessory SAR tests.

When the user enables the personal wireless router functions for the handset, actual operations include simultaneous transmission of both the WIFI transmitter and another licensed transmitter. Both transmitters often do not transmit at the same transmitting frequency and thus cannot be evaluated for SAR under actual use conditions due to the limitations of the SAR assessment probes. Therefore, SAR must be evaluated for each frequency transmission and mode separately and spatially summed with the WIFI transmitter according to FCC KDB Publication 447498 D01v05r02 publication procedures. The “Portable Hotspot” feature on the handset was NOT activated during SAR assessments, to ensure the SAR measurements were evaluated for a single transmission frequency RF signal at a time.

12. Conducted RF Output Power (Unit: dBm)

<GSM Conducted Power>

1. Per KDB 447498 D01v05r02, the maximum output power channel is used for SAR testing and for further SAR test reduction.
2. Per KDB 941225 D01v03, considering the possibility of e.g. 3rd party VoIP operation for Head and body-worn SAR test reduction for GSM and GPRS and EDGE modes is determined by the source-based time-averaged output power including tune-up tolerance. The mode with highest specified time-averaged output power should be tested for SAR compliance in the applicable exposure conditions. For modes with the same specified maximum output power and tolerance, the higher number time-slot configuration should be tested. Therefore, the EUT was set in GPRS (2Tx slots) for GSM850/GSM1900.
3. Per KDB 941225 D01v03, for Hotspot SAR test reduction for GPRS and EDGE modes is determined by the source-based time-averaged output power including tune-up tolerance, for modes with the same specified maximum output power and tolerance, the higher number time-slot configuration should be tested, therefore, the EUT was set in GPRS (2Tx slots) for GSM850/GSM1900.

Band GSM850	Burst Average Power (dBm)			Tune-up Limit (dBm)	Frame-Average Power (dBm)			Tune-up Limit (dBm)
TX Channel	128	189	251		128	189	251	
Frequency (MHz)	824.2	836.4	848.8		824.2	836.4	848.8	
GSM (GMSK, 1 Tx slot)	33.08	33.48	33.47	33.50	24.08	24.48	24.47	24.50
GPRS (GMSK, 1 Tx slot)	33.10	33.49	33.50	33.50	24.10	24.49	24.50	24.50
GPRS (GMSK, 2 Tx slots)	32.40	32.49	**32.56**	33.00	26.40	26.49	**26.56**	27.00
EDGE (8PSK, 1 Tx slot)	26.50	26.57	26.58	27.00	17.50	17.57	17.58	18.00
EDGE (8PSK, 2 Tx slots)	26.30	26.38	26.38	27.00	20.30	20.38	20.38	21.00
Band GSM1900	Burst Average Power (dBm)			Tune-up Limit (dBm)	Frame-Average Power (dBm)			Tune-up Limit (dBm)
TX Channel	512	661	810		512	661	810	
Frequency (MHz)	1850.2	1880	1909.8		1850.2	1880	1909.8	
GSM (GMSK, 1 Tx slot)	29.43	29.81	29.95	30.00	20.43	20.81	20.95	21.00
GPRS (GMSK, 1 Tx slot)	29.50	29.91	30.00	30.00	20.50	20.91	21.00	21.00
GPRS (GMSK, 2 Tx slots)	29.31	29.78	**29.85**	30.00	23.31	23.78	**23.85**	24.00
EDGE (8PSK, 1 Tx slot)	25.19	25.25	25.30	25.50	16.19	16.25	16.30	16.50
EDGE (8PSK, 2 Tx slots)	25.16	25.24	24.27	25.50	19.16	19.24	18.27	19.50

Remark: The frame-averaged power is linearly scaled the maximum burst averaged power over 8 time slots.
The calculated method are shown as below:
Frame-averaged power = Maximum burst averaged power (1 Tx Slot) - 9 dB
Frame-averaged power = Maximum burst averaged power (2 Tx Slots) - 6 dB

<WCDMA Conducted Power>

1. The following tests were conducted according to the test requirements outlines in 3GPP TS 34.121 specification.
2. The procedures in KDB 941225 D01 are applied for 3GPP Rel. 6 HSPA to configure the device in the required sub-test mode(s) to determine SAR test exclusion.
3. For DC-HSDPA, the device was configured according to the H-Set 12, Fixed Reference Channel (FRC) configuration in Table C.8.1.12 of 3GPP TS 34.121-1, with the primary and the secondary serving HS-DSCH Cell enabled during the power measurement.

A summary of these settings are illustrated below:

HSDPA Setup Configuration:

a. The EUT was connected to Base Station Agilent E5515C referred to the Setup Configuration.
b. The RF path losses were compensated into the measurements.
c. A call was established between EUT and Base Station with following setting:
   i. Set Gain Factors (β_c and β_d) and parameters were set according to each
   ii. Specific sub-test in the following table, C10.1.4, quoted from the TS 34.121
   iii. Set RMC 12.2Kbps + HSDPA mode.
   iv. Set Cell Power = -86 dBm
   v. Set HS-DSCH Configuration Type to FRC (H-set 1, QPSK)
   vi. Select HSDPA Uplink Parameters
   vii. Set Delta ACK, Delta NACK and Delta CQI = 8
   viii. Set Ack-Nack Repetition Factor to 3
   ix. Set CQI Feedback Cycle (k) to 4 ms
   x. Set CQI Repetition Factor to 2
   xi. Power Ctrl Mode = All Up bits
d. The transmitted maximum output power was recorded.

Table C.10.1.4: β values for transmitter characteristics tests with HS-DPCCH

Sub-test	β_c	β_d	β_d *(SF)*	β_c/β_d	β_{HS} *(Note1, Note 2)*	CM (dB) *(Note 3)*	MPR (dB) *(Note 3)*
1	2/15	15/15	64	2/15	4/15	0.0	0.0
2	12/15 *(Note 4)*	15/15 *(Note 4)*	64	12/15 *(Note 4)*	24/15	1.0	0.0
3	15/15	8/15	64	15/8	30/15	1.5	0.5
4	15/15	4/15	64	15/4	30/15	1.5	0.5

Note 1: Δ_{ACK}, Δ_{NACK} and Δ_{CQI} = 30/15 with β_{hs} = 30/15 * β_c.

Note 2: For the HS-DPCCH power mask requirement test in clause 5.2C, 5.7A, and the Error Vector Magnitude (EVM) with HS-DPCCH test in clause 5.13.1A, and HSDPA EVM with phase discontinuity in clause 5.13.1AA, Δ_{ACK} and Δ_{NACK} = 30/15 with β_{hs} = 30/15 * β_c, and Δ_{CQI} = 24/15 with β_{hs} = 24/15 * β_c.

Note 3: CM = 1 for β_c/β_d =12/15, β_{hs}/β_c=24/15. For all other combinations of DPDCH, DPCCH and HS-DPCCH the MPR is based on the relative CM difference. This is applicable for only UEs that support HSDPA in release 6 and later releases.

Note 4: For subtest 2 the β_c/β_d ratio of 12/15 for the TFC during the measurement period (TF1, TF0) is achieved by setting the signalled gain factors for the reference TFC (TF1, TF1) to β_c = 11/15 and β_d = 15/15.

Setup Configuration

HSUPA Setup Configuration:

a. The EUT was connected to Base Station Agilent E5515C referred to the Setup Configuration.
b. The RF path losses were compensated into the measurements.
c. A call was established between EUT and Base Station with following setting * :
   i. Call Configs = 5.2B, 5.9B, 5.10B, and 5.13.2B with QPSK
   ii. Set the Gain Factors (β_c and β_d) and parameters (AG Index) were set according to each specific sub-test in the following table, C11.1.3, quoted from the TS 34.121
   iii. Set Cell Power = -86 dBm
   iv. Set Channel Type = 12.2k + HSPA
   v. Set UE Target Power
   vi. Power Ctrl Mode= Alternating bits
   vii. Set and observe the E-TFCI
   viii. Confirm that E-TFCI is equal to the target E-TFCI of 75 for sub-test 1, and other subtest's E-TFCI
d. The transmitted maximum output power was recorded.

Table C.11.1.3: β values for transmitter characteristics tests with HS-DPCCH and E-DCH

Sub-test	β_c	β_d	β_d (SF)	β_c/β_d	β_{HS} (Note1)	β_{ec}	β_{ed} (Note 5) (Note 6)	β_{ed} (SF)	β_{ed} (Codes)	CM (dB) (Note 2)	MPR (dB) (Note 2)	AG Index (Note 6)	E-TFCI
1	11/15 (Note 3)	15/15 (Note 3)	64	11/15 (Note 3)	22/15	209/225	1309/225	4	1	1.0	0.0	20	75
2	6/15	15/15	64	6/15	12/15	12/15	94/75	4	1	3.0	2.0	12	67
3	15/15	9/15	64	15/9	30/15	30/15	$\beta_{ed}1$: 47/15 $\beta_{ed}2$: 47/15	4 4	2	2.0	1.0	15	92
4	2/15	15/15	64	2/15	4/15	2/15	56/75	4	1	3.0	2.0	17	71
5	15/15 (Note 4)	15/15 (Note 4)	64	15/15 (Note 4)	30/15	24/15	134/15	4	1	1.0	0.0	21	81

Note 1: Δ_{ACK}, Δ_{NACK} and Δ_{CQI} = 30/15 with β_{hs} = 30/15 * β_c .
Note 2: CM = 1 for β_c/β_d =12/15, β_{hs}/β_c=24/15. For all other combinations of DPDCH, DPCCH, HS- DPCCH, E-DPDCH and E-DPCCH the MPR is based on the relative CM difference.
Note 3: For subtest 1 the β_c/β_d ratio of 11/15 for the TFC during the measurement period (TF1, TF0) is achieved by setting the signalled gain factors for the reference TFC (TF1, TF1) to β_c = 10/15 and β_d = 15/15.
Note 4: For subtest 5 the β_c/β_d ratio of 15/15 for the TFC during the measurement period (TF1, TF0) is achieved by setting the signalled gain factors for the reference TFC (TF1, TF1) to β_c = 14/15 and β_d = 15/15.
Note 5: In case of testing by UE using E-DPDCH Physical Layer category 1, Sub-test 3 is omitted according to TS25.306 Table 5.1g.
Note 6: β_{ed} can not be set directly, it is set by Absolute Grant Value.

Setup Configuration

DC-HSDPA 3GPP release 8 Setup Configuration:

a. The EUT was connected to Base Station Agilent E5515C referred to the Setup Configuration below
b. The RF path losses were compensated into the measurements.
c. A call was established between EUT and Base Station with following setting:
   i. Set RMC 12.2Kbps + HSDPA mode.
   ii. Set Cell Power = -25 dBm
   iii. Set HS-DSCH Configuration Type to FRC (H-set 12, QPSK)
   iv. Select HSDPA Uplink Parameters
   v. Set Gain Factors (β_c and β_d) and parameters were set according to each Specific sub-test in the following table, C10.1.4, quoted from the TS 34.121
      a). Subtest 1: β_c/β_d=2/15
      b). Subtest 2: β_c/β_d=12/15
      c). Subtest 3: β_c/β_d=15/8
      d). Subtest 4: β_c/β_d=15/4
   vi. Set Delta ACK, Delta NACK and Delta CQI = 8
   vii. Set Ack-Nack Repetition Factor to 3
   viii. Set CQI Feedback Cycle (k) to 4 ms
   ix. Set CQI Repetition Factor to 2
   x. Power Ctrl Mode = All Up bits
d. The transmitted maximum output power was recorded.

The following tests were conducted according to the test requirements outlines in 3GPP TS 34.121 specification.
A summary of these settings are illustrated below:

C.8.1.12 Fixed Reference Channel Definition H-Set 12

Table C.8.1.12: Fixed Reference Channel H-Set 12

Parameter	Unit	Value
Nominal Avg. Inf. Bit Rate	kbps	60
Inter-TTI Distance	TTI's	1
Number of HARQ Processes	Processes	6
Information Bit Payload (N_{INF})	Bits	120
Number Code Blocks	Blocks	1
Binary Channel Bits Per TTI	Bits	960
Total Available SML's in UE	SML's	19200
Number of SML's per HARQ Proc.	SML's	3200
Coding Rate		0.15
Number of Physical Channel Codes	Codes	1
Modulation		QPSK
Note 1: The RMC is intended to be used for DC-HSDPA mode and both cells shall transmit with identical parameters as listed in the table.		
Note 2: Maximum number of transmission is limited to 1, i.e., retransmission is not allowed. The redundancy and constellation version 0 shall be used.		

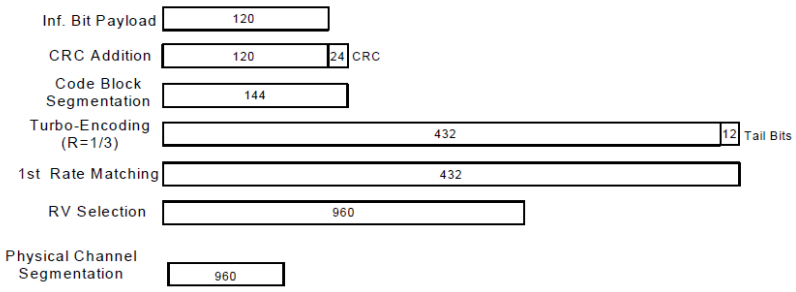

Figure C.8.19: Coding rate for Fixed reference Channel H-Set 12 (QPSK)

Setup Configuration

<WCDMA Conducted Power>

General Note:

1. Per KDB 941225 D01v03, SAR for Head / Hotspot / Body-worn exposure is measured using a 12.2 kbps RMC with TPC bits configured to all "1's".
2. Per KDB 941225 D01v03, RMC 12.2kbps setting is used to evaluate SAR. If the maximum output power and tune-up tolerance specified for production units in HSDPA / HSUPA / DC-HSDPA is ≤ ¼ dB higher than RMC 12.2Kbps or when the highest reported SAR of the RMC12.2Kbps is scaled by the ratio of specified maximum output power and tune-up tolerance of HSDPA / HSUPA / DC-HSDPA to RMC12.2Kbps and the adjusted SAR is ≤ 1.2 W/kg, SAR measurement is not required for HSDPA / HSUPA / DC-HSDPA.

Band			WCDMA Band V			Tune-up Limit (dBm)	WCDMA Band II			Tune-up Limit (dBm)	WCDMA Band IV			Tune-up Limit (dBm)
TX Channel			4132	4182	4233		9262	9400	9538		1312	1413	1513	
Rx Channel			4357	4407	4458		9662	9800	9938		1537	1638	1738	
Frequency (MHz)			826.4	836.4	846.6		1852.4	1880	1907.6		1712.4	1732.6	1752.6	
MPR (dB)	3GPP Rel 99	AMR 12.2Kbps	23.98	23.78	23.97	24.00	23.53	23.52	23.49	24.00	23.43	23.39	23.41	24.00
MPR (dB)	3GPP Rel 99	RMC 12.2Kbps	**23.99**	23.88	23.98	24.00	23.57	**23.58**	23.50	24.00	**23.47**	23.43	23.45	24.00
0	3GPP Rel 6	HSDPA Subtest-1	22.99	22.98	22.98	24.00	22.56	22.62	22.57	24.00	22.43	22.49	22.58	24.00
0	3GPP Rel 6	HSDPA Subtest-2	22.98	22.97	22.96	24.00	22.67	22.72	22.51	24.00	22.33	22.43	22.43	24.00
0.5	3GPP Rel 6	HSDPA Subtest-3	22.49	22.50	22.50	23.50	22.03	22.12	21.97	23.50	21.89	21.94	21.96	23.50
0.5	3GPP Rel 6	HSDPA Subtest-4	22.45	22.44	22.45	23.50	22.15	22.19	21.95	23.50	21.84	21.90	21.92	23.50
0	3GPP Rel 8	DC-HSDPA Subtest-1	22.75	22.73	22.73	24.00	22.48	22.49	22.45	24.00	22.40	22.45	22.52	24.00
0	3GPP Rel 8	DC-HSDPA Subtest-2	22.74	22.73	22.72	24.00	22.47	22.49	22.44	24.00	22.35	22.40	22.41	24.00
0.5	3GPP Rel 8	DC-HSDPA Subtest-3	22.42	22.48	22.47	23.50	22.03	22.10	21.95	23.50	21.85	21.90	21.92	23.50
0.5	3GPP Rel 8	DC-HSDPA Subtest-4	22.37	22.44	22.42	23.50	22.11	22.15	21.99	23.50	21.80	21.88	21.90	23.50
0	3GPP Rel 6	HSUPA Subtest-1	22.67	22.64	22.67	24.00	22.82	22.86	22.70	24.00	22.89	22.95	23.03	24.00
2	3GPP Rel 6	HSUPA Subtest-2	21.92	21.63	21.93	23.00	21.83	21.85	21.75	23.00	21.93	21.98	21.74	23.00
1	3GPP Rel 6	HSUPA Subtest-3	21.89	21.88	21.88	23.00	21.08	21.17	21.04	23.00	21.18	21.27	21.29	23.00
2	3GPP Rel 6	HSUPA Subtest-4	22.45	21.95	21.99	23.00	22.01	22.09	22.00	23.00	22.10	22.58	22.18	23.00
0	3GPP Rel 6	HSUPA Subtest-5	22.96	23.00	22.95	24.00	22.94	22.94	22.85	24.00	23.00	23.06	23.08	24.00

<LTE Conducted Power>

General Note:

1. Anritsu MT8820C base station simulator was used to setup the connection with EUT; the frequency band, channel bandwidth, RB allocation configuration, modulation type are set in the base station simulator to configure EUT transmitting at maximum power and at different configurations which are requested to be reported to FCC, for conducted power measurement and SAR testing.
2. Per KDB 941225 D05v02r03, when a properly configured base station simulator is used for the SAR and power measurements, spectrum plots for each RB allocation and offset configuration is not required.
3. Per KDB 941225 D05v02r03, start with the largest channel bandwidth and measure SAR for QPSK with 1 RB allocation, using the RB offset and required test channel combination with the highest maximum output power for RB offsets at the upper edge, middle and lower edge of each required test channel.
4. Per KDB 941225 D05v02r03, 50% RB allocation for QPSK SAR testing follows 1RB QPSK allocation procedure.
5. Per KDB 941225 D05v02r03, For QPSK with 100% RB allocation, SAR is not required when the highest maximum output power for 100 % RB allocation is less than the highest maximum output power in 50% and 1 RB allocations and the highest reported SAR for 1 RB and 50% RB allocation are ≤ 0.8 W/kg. Otherwise, SAR is measured for the highest output power channel; and if the reported SAR is > 1.45 W/kg, the remaining required test channels must also be tested.
6. Per KDB 941225 D05v02r03, 16QAM output power for each RB allocation configuration is > not ½ dB higher than the same configuration in QPSK and the reported SAR for the QPSK configuration is ≤ 1.45 W/kg; Per KDB 941225 D05v02r03, 16QAM SAR testing is not required.
7. Per KDB 941225 D05v02r03, Smaller bandwidth output power for each RB allocation configuration is > not ½ dB higher than the same configuration in the largest supported bandwidth, and the reported SAR for the largest supported bandwidth is ≤ 1.45 W/kg; Per KDB 941225 D05v02r03, smaller bandwidth SAR testing is not required.

<LTE Band 12>

BW [MHz]	Modulation	RB Size	RB Offset	Power Low Ch. / Freq.	Power Middle Ch. / Freq.	Power High Ch. / Freq.	Tune up Limit (dBm)	MPR (dB)
Channel				23060	23095	23130		
Frequency (MHz)				704	707.5	711		
10	QPSK	1	0	23.62	23.85	23.71	24.50	0
10	QPSK	1	24	23.49	23.75	23.61		
10	QPSK	1	49	23.65	23.61	23.63		
10	QPSK	25	0	22.32	22.60	22.56	23.50	0-1
10	QPSK	25	12	22.44	22.71	22.66		
10	QPSK	25	24	22.62	22.62	22.60		
10	QPSK	50	0	22.47	22.62	22.65		
10	16QAM	1	0	23.03	22.77	23.09	23.50	0-1
10	16QAM	1	24	22.82	23.08	22.89		
10	16QAM	1	49	23.02	22.98	22.98		
10	16QAM	25	0	21.30	21.59	21.51	22.50	0-2
10	16QAM	25	12	21.43	21.67	21.61		
10	16QAM	25	24	21.62	21.60	21.60		
10	16QAM	50	0	21.43	21.57	21.64		
Channel				23035	23095	23155	Tune up Limit (dBm)	MPR (dB)
Frequency (MHz)				701.5	707.5	713.5		
5	QPSK	1	0	23.62	23.73	23.67	24.50	0
5	QPSK	1	12	23.32	23.57	23.55		
5	QPSK	1	24	23.40	23.62	23.59		
5	QPSK	12	0	22.47	22.64	22.61	23.50	0-1
5	QPSK	12	6	22.30	22.61	22.59		
5	QPSK	12	11	22.30	22.61	22.58		
5	QPSK	25	0	22.32	22.59	22.62		
5	16QAM	1	0	22.88	22.98	22.92	23.50	0-1
5	16QAM	1	12	22.61	22.92	22.90		
5	16QAM	1	24	22.70	22.89	22.90		
5	16QAM	12	0	21.47	21.63	21.66	22.50	0-2
5	16QAM	12	6	21.27	21.61	21.59		
5	16QAM	12	11	21.26	21.58	21.61		
5	16QAM	25	0	21.32	21.56	21.62		
Channel				23025	23095	23165	Tune up Limit (dBm)	MPR (dB)
Frequency (MHz)				700.5	707.5	714.5		
3	QPSK	1	0	23.70	23.68	23.60	24.50	0
3	QPSK	1	7	23.69	23.84	23.77		
3	QPSK	1	14	23.26	23.72	23.60		
3	QPSK	8	0	22.40	22.64	22.53	23.50	0-1
3	QPSK	8	4	22.51	22.64	22.70		
3	QPSK	8	7	22.35	22.68	22.67		
3	QPSK	15	0	22.40	22.61	22.63		
3	16QAM	1	0	22.87	22.91	22.84	23.50	0-1
3	16QAM	1	7	22.72	23.01	23.00		
3	16QAM	1	14	22.54	22.94	22.88		
3	16QAM	8	0	21.45	21.67	21.56	22.50	0-2
3	16QAM	8	4	21.53	21.68	21.71		
3	16QAM	8	7	21.36	21.69	21.74		
3	16QAM	15	0	21.37	21.56	21.60		

Channel				23017	23095	23173	Tune up Limit (dBm)	Target MPR (dB)
Frequency (MHz)				699.7	707.5	715.3		
1.4	QPSK	1	0	23.73	23.84	23.78	24.50	0
1.4	QPSK	1	2	23.66	23.81	23.72		
1.4	QPSK	1	5	23.50	23.70	23.73		
1.4	QPSK	3	0	23.49	23.62	23.61		
1.4	QPSK	3	1	23.61	23.75	23.64		
1.4	QPSK	3	2	23.53	23.65	23.65		
1.4	QPSK	6	0	22.44	22.53	22.59	23.50	0-1
1.4	16QAM	1	0	22.89	23.08	23.01	23.50	0-1
1.4	16QAM	1	2	22.87	23.06	22.92		
1.4	16QAM	1	5	22.75	23.03	22.97		
1.4	16QAM	3	0	22.47	22.69	22.70		
1.4	16QAM	3	1	22.64	22.77	22.63		
1.4	16QAM	3	2	22.59	22.68	22.71		
1.4	16QAM	6	0	21.52	21.61	21.67	22.50	0-2

<LTE Band 17>

BW [MHz]	Modulation	RB Size	RB Offset	Power Low Ch. / Freq.	Power Middle Ch. / Freq.	Power High Ch. / Freq.	Tune up Limit (dBm)	MPR (dB)
Channel				23780	23790	23800		
Frequency (MHz)				709	710	711		
10	QPSK	1	0	23.63	23.69	23.60	24.50	0
10	QPSK	1	24	23.64	23.66	23.62		
10	QPSK	1	49	23.65	23.65	23.55		
10	QPSK	25	0	22.57	22.60	22.54	23.50	0-1
10	QPSK	25	12	22.59	22.59	22.66		
10	QPSK	25	24	22.58	22.63	22.61		
10	QPSK	50	0	22.62	22.67	22.65		
10	16QAM	1	0	22.94	22.89	22.92	23.50	0-1
10	16QAM	1	24	22.92	22.93	22.90		
10	16QAM	1	49	23.03	22.99	22.91		
10	16QAM	25	0	21.52	21.56	21.51	22.50	0-2
10	16QAM	25	12	21.54	21.56	21.61		
10	16QAM	25	24	21.56	21.62	21.58		
10	16QAM	50	0	21.56	21.62	21.60		
Channel				23755	23790	23825	Tune up Limit (dBm)	MPR (dB)
Frequency (MHz)				706.5	710	713.5		
5	QPSK	1	0	23.68	23.63	23.57	24.50	0
5	QPSK	1	12	23.59	23.59	23.58		
5	QPSK	1	24	23.60	23.62	23.56		
5	QPSK	12	0	22.61	22.51	22.60	23.50	0-1
5	QPSK	12	6	22.71	22.62	22.67		
5	QPSK	12	11	22.59	22.59	22.59		
5	QPSK	25	0	22.60	22.56	22.59		
5	16QAM	1	0	22.90	22.92	22.83	23.50	0-1
5	16QAM	1	12	22.99	22.90	23.03		
5	16QAM	1	24	22.88	22.89	22.90		
5	16QAM	12	0	21.58	21.53	21.65	22.50	0-2
5	16QAM	12	6	21.68	21.62	21.67		
5	16QAM	12	11	21.53	21.57	21.58		
5	16QAM	25	0	21.60	21.53	21.56		

<LTE Band 13>

BW [MHz]	Modulation	RB Size	RB Offset	Power Low Ch. / Freq.	Power Middle Ch. / Freq.	Power High Ch. / Freq.	Tune up Limit (dBm)	MPR (dB)
Channel					23230			
Frequency (MHz)					782			
10	QPSK	1	0		22.96		24.50	0
10	QPSK	1	24		22.78			
10	QPSK	1	49		22.93			
10	QPSK	25	0		21.85		23.50	0-1
10	QPSK	25	12		21.83			
10	QPSK	25	24		21.81			
10	QPSK	50	0		21.74			
10	16QAM	1	0		22.20		23.50	0-1
10	16QAM	1	24		22.13			
10	16QAM	1	49		22.13			
10	16QAM	25	0		20.82		22.50	0-2
10	16QAM	25	12		20.84			
10	16QAM	25	24		20.81			
10	16QAM	50	0		20.71			
Channel				23205	23230	23255	Tune up Limit (dBm)	MPR (dB)
Frequency (MHz)				779.5	782	784.5		
5	QPSK	1	0	22.89	22.95	22.82	24.50	0
5	QPSK	1	12	22.88	22.79	22.93		
5	QPSK	1	24	22.84	22.88	22.86		
5	QPSK	12	0	21.71	21.82	21.70	23.50	0-1
5	QPSK	12	6	21.87	21.78	21.79		
5	QPSK	12	11	21.79	21.77	21.81		
5	QPSK	25	0	21.80	21.83	21.86		
5	16QAM	1	0	22.15	22.17	22.07	23.50	0-1
5	16QAM	1	12	22.20	22.07	22.06		
5	16QAM	1	24	22.12	22.16	22.12		
5	16QAM	12	0	20.97	20.94	20.95	22.50	0-2
5	16QAM	12	6	20.92	20.86	20.90		
5	16QAM	12	11	20.85	20.92	20.93		
5	16QAM	25	0	20.83	20.82	20.84		

<LTE Band 5>

BW [MHz]	Modulation	RB Size	RB Offset	Power Low Ch. / Freq.	Power Middle Ch. / Freq.	Power High Ch. / Freq.	Tune up Limit (dBm)	MPR (dB)
Channel				20450	20525	20600		
Frequency (MHz)				829	836.5	844		
10	QPSK	1	0	23.71	23.74	23.69	24.50	0
10	QPSK	1	24	23.62	23.65	23.65		
10	QPSK	1	49	23.64	23.58	23.50		
10	QPSK	25	0	22.69	22.70	22.68	23.50	0-1
10	QPSK	25	12	22.68	22.65	22.65		
10	QPSK	25	24	22.61	22.61	22.57		
10	QPSK	50	0	22.63	22.56	22.61		
10	16QAM	1	0	23.07	23.10	22.98	23.50	0-1
10	16QAM	1	24	22.90	22.88	22.93		
10	16QAM	1	49	22.93	22.86	22.89		
10	16QAM	25	0	21.63	21.67	21.65	22.50	0-2
10	16QAM	25	12	21.63	21.58	21.66		
10	16QAM	25	24	21.61	21.53	21.57		
10	16QAM	50	0	21.53	21.54	21.61		
Channel				20425	20525	20625	Tune up Limit (dBm)	MPR (dB)
Frequency (MHz)				826.5	836.5	846.5		
5	QPSK	1	0	23.71	23.73	23.68	24.50	0
5	QPSK	1	12	23.63	23.58	23.41		
5	QPSK	1	24	23.63	23.65	23.48		
5	QPSK	12	0	22.59	22.56	22.49	23.50	0-1
5	QPSK	12	6	22.64	22.61	22.53		
5	QPSK	12	11	22.61	22.69	22.53		
5	QPSK	25	0	22.58	22.60	22.47		
5	16QAM	1	0	22.96	23.01	22.92	23.50	0-1
5	16QAM	1	12	22.88	22.89	22.78		
5	16QAM	1	24	22.89	22.95	22.83		
5	16QAM	12	0	21.61	21.59	21.56	22.50	0-2
5	16QAM	12	6	21.62	21.62	21.53		
5	16QAM	12	11	21.62	21.68	21.53		
5	16QAM	25	0	21.55	21.55	21.50		
Channel				20415	20525	20635	Tune up Limit (dBm)	MPR (dB)
Frequency (MHz)				825.5	836.5	847.5		
3	QPSK	1	0	23.60	23.57	23.57	24.50	0
3	QPSK	1	7	23.72	23.68	23.64		
3	QPSK	1	14	23.47	23.60	23.47		
3	QPSK	8	0	22.52	22.43	22.50	23.50	0-1
3	QPSK	8	4	22.50	22.52	22.53		
3	QPSK	8	7	22.42	22.56	22.52		
3	QPSK	15	0	22.46	22.47	22.53		
3	16QAM	1	0	22.80	22.77	22.78	23.50	0-1
3	16QAM	1	7	22.99	22.99	22.86		
3	16QAM	1	14	22.72	22.82	22.77		
3	16QAM	8	0	21.54	21.42	21.58	22.50	0-2
3	16QAM	8	4	21.54	21.52	21.59		
3	16QAM	8	7	21.43	21.58	21.59		
3	16QAM	15	0	21.43	21.43	21.56		

Channel				20407	20525	20643	Tune up Limit (dBm)	Target MPR (dB)
Frequency (MHz)				824.7	836.5	848.3		
1.4	QPSK	1	0	23.69	23.62	23.68	24.50	0
1.4	QPSK	1	2	23.70	23.65	23.62		
1.4	QPSK	1	5	23.61	23.59	23.60		
1.4	QPSK	3	0	23.55	23.44	23.48		
1.4	QPSK	3	1	23.65	23.55	23.59		
1.4	QPSK	3	2	23.58	23.55	23.53		
1.4	QPSK	6	0	22.47	22.43	22.48	23.50	0-1
1.4	16QAM	1	0	22.88	22.80	22.94	23.50	0-1
1.4	16QAM	1	2	22.95	22.86	22.92		
1.4	16QAM	1	5	22.79	22.81	22.90		
1.4	16QAM	3	0	22.55	22.46	22.54		
1.4	16QAM	3	1	22.64	22.57	22.61		
1.4	16QAM	3	2	22.62	22.56	22.62		
1.4	16QAM	6	0	21.53	21.49	21.60	22.50	0-2

<LTE Band 4>

BW [MHz]	Modulation	RB Size	RB Offset	Power Low Ch. / Freq.	Power Middle Ch. / Freq.	Power High Ch. / Freq.	Tune up Limit (dBm)	MPR (dB)
Channel				20050	20175	20300		
Frequency (MHz)				1720	1732.5	1745		
20	QPSK	1	0	23.01	23.09	23.08	24.00	0
20	QPSK	1	49	22.54	22.59	22.46		
20	QPSK	1	99	22.45	22.46	22.60		
20	QPSK	50	0	21.61	21.68	21.67	23.00	0-1
20	QPSK	50	24	21.55	21.42	21.47		
20	QPSK	50	49	21.37	21.60	21.62		
20	QPSK	100	0	21.43	21.46	21.40		
20	16QAM	1	0	22.26	22.38	22.34	23.00	0-1
20	16QAM	1	49	21.59	21.59	21.70		
20	16QAM	1	99	21.74	21.76	21.99		
20	16QAM	50	0	20.50	20.63	20.68	22.00	0-2
20	16QAM	50	24	20.51	20.59	20.44		
20	16QAM	50	49	20.53	20.59	20.59		
20	16QAM	100	0	20.40	20.48	20.49		
Channel				20025	20175	20325	Tune up Limit (dBm)	MPR (dB)
Frequency (MHz)				1717.5	1732.5	1747.5		
15	QPSK	1	0	22.74	22.80	22.75	24.00	0
15	QPSK	1	37	22.19	22.33	22.11		
15	QPSK	1	74	22.42	22.41	22.39		
15	QPSK	36	0	21.44	21.50	21.54	23.00	0-1
15	QPSK	36	18	21.27	21.29	21.31		
15	QPSK	36	37	21.27	21.14	21.23		
15	QPSK	75	0	21.27	21.30	21.42		
15	16QAM	1	0	21.95	22.08	21.98	23.00	0-1
15	16QAM	1	37	21.83	21.40	21.49		
15	16QAM	1	74	21.70	21.67	21.67		
15	16QAM	36	0	20.48	20.51	20.53	22.00	0-2
15	16QAM	36	18	20.29	20.17	20.33		
15	16QAM	36	37	20.24	20.16	20.28		
15	16QAM	75	0	20.35	20.30	20.46		
Channel				20000	20175	20350	Tune up Limit (dBm)	MPR (dB)
Frequency (MHz)				1715	1732.5	1750		
10	QPSK	1	0	22.60	22.35	22.55	24.00	0
10	QPSK	1	24	22.42	22.27	22.27		
10	QPSK	1	49	22.30	22.15	22.13		
10	QPSK	25	0	21.31	21.25	21.21	23.00	0-1
10	QPSK	25	12	21.23	21.21	21.15		
10	QPSK	25	24	21.24	21.09	21.12		
10	QPSK	50	0	21.30	21.18	21.18		
10	16QAM	1	0	21.90	21.80	21.75	23.00	0-1
10	16QAM	1	24	21.74	21.38	21.45		
10	16QAM	1	49	21.54	21.42	21.51		
10	16QAM	25	0	20.32	20.17	20.25	22.00	0-2
10	16QAM	25	12	20.25	20.14	20.12		
10	16QAM	25	24	20.23	20.13	20.20		
10	16QAM	50	0	20.27	20.22	20.30		

Channel				19975	20175	20375	Tune up Limit (dBm)	MPR (dB)
Frequency (MHz)				1712.5	1732.5	1752.5		
5	QPSK	1	0	22.27	22.33	22.27	24.00	0
5	QPSK	1	12	22.29	22.24	22.11		
5	QPSK	1	24	22.17	22.16	22.09		
5	QPSK	12	0	21.21	21.16	21.10	23.00	0-1
5	QPSK	12	6	21.15	21.18	21.19		
5	QPSK	12	11	21.17	21.30	21.08		
5	QPSK	25	0	21.14	21.16	21.14		
5	16QAM	1	0	21.48	21.54	21.51	23.00	0-1
5	16QAM	1	12	21.63	21.56	21.58		
5	16QAM	1	24	21.41	21.51	21.38		
5	16QAM	12	0	20.24	20.24	20.20	22.00	0-2
5	16QAM	12	6	20.15	20.37	20.28		
5	16QAM	12	11	20.16	20.31	20.19		
5	16QAM	25	0	20.15	20.25	20.20		
Channel				19965	20175	20385	Tune up Limit (dBm)	MPR (dB)
Frequency (MHz)				1711.5	1732.5	1753.5		
3	QPSK	1	0	22.30	22.20	22.29	24.00	0
3	QPSK	1	7	22.51	22.42	22.36		
3	QPSK	1	14	22.13	22.23	22.06		
3	QPSK	8	0	21.15	21.27	21.08	23.00	0-1
3	QPSK	8	4	21.19	21.31	21.26		
3	QPSK	8	7	21.19	21.16	21.25		
3	QPSK	15	0	21.18	21.30	21.17		
3	16QAM	1	0	21.44	21.46	21.52	23.00	0-1
3	16QAM	1	7	21.66	21.60	21.78		
3	16QAM	1	14	21.46	21.55	21.44		
3	16QAM	8	0	20.19	20.39	20.30	22.00	0-2
3	16QAM	8	4	20.29	20.35	20.34		
3	16QAM	8	7	20.24	20.23	20.34		
3	16QAM	15	0	20.18	20.26	20.22		
Channel				19957	20175	20393	Tune up Limit (dBm)	MPR (dB)
Frequency (MHz)				1710.7	1732.5	1754.3		
1.4	QPSK	1	0	22.34	22.29	22.24	24.00	0
1.4	QPSK	1	2	22.46	22.34	22.20		
1.4	QPSK	1	5	22.30	22.11	22.04		
1.4	QPSK	3	0	22.26	22.18	22.14		
1.4	QPSK	3	1	22.30	22.26	22.12		
1.4	QPSK	3	2	22.23	22.20	22.12		
1.4	QPSK	6	0	21.19	21.07	21.00	23.00	0-1
1.4	16QAM	1	0	21.59	21.57	21.47	23.00	0-1
1.4	16QAM	1	2	21.61	21.57	21.52		
1.4	16QAM	1	5	21.59	21.46	21.36		
1.4	16QAM	3	0	21.28	21.25	21.18		
1.4	16QAM	3	1	21.32	21.24	21.18		
1.4	16QAM	3	2	21.29	21.28	21.23		
1.4	16QAM	6	0	20.28	20.35	20.19	22.00	0-2

<LTE Band 2>

BW [MHz]	Modulation	RB Size	RB Offset	Power Low Ch. / Freq.	Power Middle Ch. / Freq.	Power High Ch. / Freq.	Tune up Limit (dBm)	MPR (dB)
Channel				18700	18900	19100		
Frequency (MHz)				1860	1880	1900		
20	QPSK	1	0	23.21	23.11	23.27	23.50	0
20	QPSK	1	49	22.72	22.61	22.77		
20	QPSK	1	99	22.55	22.69	22.59		
20	QPSK	50	0	21.61	21.73	21.72	22.50	0-1
20	QPSK	50	24	21.71	21.45	21.61		
20	QPSK	50	49	21.65	21.46	21.65		
20	QPSK	100	0	21.52	21.53	21.59		
20	16QAM	1	0	22.50	22.38	22.44	22.50	0-1
20	16QAM	1	49	21.63	21.67	21.62		
20	16QAM	1	99	21.83	22.04	21.82		
20	16QAM	50	0	20.62	20.71	20.66	21.50	0-2
20	16QAM	50	24	20.73	20.42	20.57		
20	16QAM	50	49	20.72	20.45	20.59		
20	16QAM	100	0	20.61	20.68	20.60		
Channel				18675	18900	19125	Tune up Limit (dBm)	MPR (dB)
Frequency (MHz)				1857.5	1880	1902.5		
15	QPSK	1	0	22.92	22.93	22.97	23.50	0
15	QPSK	1	37	22.41	22.32	22.48		
15	QPSK	1	74	22.43	22.61	22.45		
15	QPSK	36	0	21.58	21.57	21.50	22.50	0-1
15	QPSK	36	18	21.30	21.47	21.46		
15	QPSK	36	37	21.26	21.38	21.40		
15	QPSK	75	0	21.38	21.55	21.56		
15	16QAM	1	0	22.19	22.17	22.19	22.50	0-1
15	16QAM	1	37	21.54	21.65	21.51		
15	16QAM	1	74	21.64	21.85	21.75		
15	16QAM	36	0	20.57	20.60	20.57	21.50	0-2
15	16QAM	36	18	20.27	20.44	20.46		
15	16QAM	36	37	20.24	20.39	20.42		
15	16QAM	75	0	20.42	20.57	20.60		
Channel				18650	18900	19150	Tune up Limit (dBm)	MPR (dB)
Frequency (MHz)				1855	1880	1905		
10	QPSK	1	0	22.72	22.72	22.23	23.50	0
10	QPSK	1	24	22.30	22.48	22.44		
10	QPSK	1	49	22.30	22.53	22.43		
10	QPSK	25	0	21.51	21.50	21.37	22.50	0-1
10	QPSK	25	12	21.47	21.45	21.53		
10	QPSK	25	24	21.30	21.40	21.34		
10	QPSK	50	0	21.44	21.52	21.59		
10	16QAM	1	0	22.04	22.06	21.70	22.50	0-1
10	16QAM	1	24	21.64	21.74	21.76		
10	16QAM	1	49	21.72	21.66	21.72		
10	16QAM	25	0	20.47	20.52	20.42	21.50	0-2
10	16QAM	25	12	20.41	20.49	20.51		
10	16QAM	25	24	20.30	20.37	20.34		
10	16QAM	50	0	20.43	20.42	20.49		

Channel				18625	18900	19175	Tune up Limit (dBm)	MPR (dB)
Frequency (MHz)				1852.5	1880	1907.5		
5	QPSK	1	0	22.48	22.52	22.65	23.50	0
5	QPSK	1	12	22.29	22.42	22.53		
5	QPSK	1	24	22.23	22.54	22.48		
5	QPSK	12	0	21.37	21.38	21.53	22.50	0-1
5	QPSK	12	6	21.44	21.40	21.47		
5	QPSK	12	11	21.34	21.28	21.47		
5	QPSK	25	0	21.34	21.25	21.55		
5	16QAM	1	0	21.54	21.74	21.85	22.50	0-1
5	16QAM	1	12	21.60	21.72	21.87		
5	16QAM	1	24	21.65	21.80	21.77		
5	16QAM	12	0	20.45	20.49	20.55	21.50	0-2
5	16QAM	12	6	20.51	20.40	20.50		
5	16QAM	12	11	20.43	20.33	20.50		
5	16QAM	25	0	20.47	20.35	20.57		
Channel				18615	18900	19185	Tune up Limit (dBm)	MPR (dB)
Frequency (MHz)				1851.5	1880	1908.5		
3	QPSK	1	0	22.37	22.48	22.53	23.50	0
3	QPSK	1	7	22.39	22.76	22.67		
3	QPSK	1	14	22.28	22.53	22.47		
3	QPSK	8	0	21.41	21.49	21.45	22.50	0-1
3	QPSK	8	4	21.49	21.54	21.52		
3	QPSK	8	7	21.35	21.44	21.52		
3	QPSK	15	0	21.36	21.47	21.49		
3	16QAM	1	0	21.58	21.67	21.75	22.50	0-1
3	16QAM	1	7	21.63	21.90	21.90		
3	16QAM	1	14	21.59	21.75	21.70		
3	16QAM	8	0	20.50	20.59	20.55	21.50	0-2
3	16QAM	8	4	20.41	20.56	20.58		
3	16QAM	8	7	20.46	20.49	20.55		
3	16QAM	15	0	20.41	20.38	20.55		
Channel				18607	18900	19193	Tune up Limit (dBm)	MPR (dB)
Frequency (MHz)				1850.7	1880	1909.3		
1.4	QPSK	1	0	22.28	22.54	22.58	23.50	0
1.4	QPSK	1	2	22.33	22.52	22.53		
1.4	QPSK	1	5	22.34	22.34	22.44		
1.4	QPSK	3	0	22.15	22.34	22.42		
1.4	QPSK	3	1	22.29	22.52	22.56		
1.4	QPSK	3	2	22.15	22.46	22.54		
1.4	QPSK	6	0	21.22	21.34	21.42	22.50	0-1
1.4	16QAM	1	0	21.61	21.76	21.77	22.50	0-1
1.4	16QAM	1	2	21.73	21.75	21.82		
1.4	16QAM	1	5	21.54	21.73	21.75		
1.4	16QAM	3	0	21.29	21.32	21.51		
1.4	16QAM	3	1	21.43	21.54	21.49		
1.4	16QAM	3	2	21.46	21.59	21.60		
1.4	16QAM	6	0	20.35	20.45	20.51	21.50	0-2

<LTE Band 30

BW [MHz]	Modulation	RB Size	RB Offset	Power Low Ch. / Freq.	Power Middle Ch. / Freq.	Power High Ch. / Freq.	Tune up Limit (dBm)	MPR (dB)
Channel					27710			
Frequency (MHz)					2310			
10	QPSK	1	0		**20.92**		22.00	0
10	QPSK	1	24		20.76			
10	QPSK	1	49		20.70			
10	QPSK	25	0		19.82		21.00	0-1
10	QPSK	25	12		19.79			
10	QPSK	25	24		19.67			
10	QPSK	50	0		19.76			
10	16QAM	1	0		20.19		21.00	0-1
10	16QAM	1	24		20.08			
10	16QAM	1	49		19.92			
10	16QAM	25	0		18.87		20.00	0-2
10	16QAM	25	12		18.82			
10	16QAM	25	24		18.70			
10	16QAM	50	0		18.76			
Channel				27685	27710	27735	Tune up Limit (dBm)	MPR (dB)
Frequency (MHz)				2307.5	2310	2312.5		
5	QPSK	1	0	20.87	20.79	20.81	22.00	0
5	QPSK	1	12	20.75	20.66	20.80		
5	QPSK	1	24	20.68	20.71	20.80		
5	QPSK	12	0	19.76	19.82	19.74	21.00	0-1
5	QPSK	12	6	19.78	19.77	19.82		
5	QPSK	12	11	19.76	19.75	19.75		
5	QPSK	25	0	19.75	19.78	19.76		
5	16QAM	1	0	20.10	20.01	20.07	21.00	0-1
5	16QAM	1	12	20.18	20.15	20.20		
5	16QAM	1	24	19.91	19.95	20.03		
5	16QAM	12	0	18.81	18.85	18.81	20.00	0-2
5	16QAM	12	6	18.79	18.76	18.87		
5	16QAM	12	11	18.74	18.76	18.80		
5	16QAM	25	0	18.78	18.81	18.79		

<LTE Band 7>

BW [MHz]	Modulation	RB Size	RB Offset	Power Low Ch. / Freq.	Power Middle Ch. / Freq.	Power High Ch. / Freq.	Tune up Limit (dBm)	MPR (dB)
Channel				20850	21100	21350		
Frequency (MHz)				2510	2535	2560		
20	QPSK	1	0	23.39	23.08	22.98	24.00	0
20	QPSK	1	49	22.96	22.73	22.62		
20	QPSK	1	99	22.69	22.87	22.69		
20	QPSK	50	0	22.65	22.32	21.95	23.00	0-1
20	QPSK	50	24	22.56	21.91	21.89		
20	QPSK	50	49	22.51	21.80	22.12		
20	QPSK	100	0	22.46	22.06	22.07		
20	16QAM	1	0	22.43	22.35	21.96	23.00	0-1
20	16QAM	1	49	22.30	21.96	21.85		
20	16QAM	1	99	21.96	22.11	21.99		
20	16QAM	50	0	20.70	21.34	20.98	22.00	0-2
20	16QAM	50	24	21.21	20.91	20.93		
20	16QAM	50	49	21.18	20.82	21.18		
20	16QAM	100	0	21.13	21.07	21.11		
Channel				20825	21100	21375	Tune up Limit (dBm)	MPR (dB)
Frequency (MHz)				2507.5	2535	2562.5		
15	QPSK	1	0	23.05	23.07	22.75	24.00	0
15	QPSK	1	37	22.69	22.62	22.64		
15	QPSK	1	74	22.36	22.81	22.65		
15	QPSK	36	0	22.30	22.04	21.90	23.00	0-1
15	QPSK	36	18	21.96	21.85	21.94		
15	QPSK	36	37	21.86	21.60	21.96		
15	QPSK	75	0	21.56	21.81	21.96		
15	16QAM	1	0	22.30	22.30	22.00	23.00	0-1
15	16QAM	1	37	21.69	21.88	21.92		
15	16QAM	1	74	21.58	22.12	21.94		
15	16QAM	36	0	20.52	21.07	20.94	22.00	0-2
15	16QAM	36	18	20.37	20.87	20.98		
15	16QAM	36	37	21.36	20.61	21.02		
15	16QAM	75	0	20.36	20.84	21.00		
Channel				20800	21100	21400	Tune up Limit (dBm)	MPR (dB)
Frequency (MHz)				2505	2535	2565		
10	QPSK	1	0	23.33	23.23	23.34	24.00	0
10	QPSK	1	24	23.30	23.22	23.33		
10	QPSK	1	49	22.91	23.21	23.12		
10	QPSK	25	0	22.32	22.24	22.28	23.00	0-1
10	QPSK	25	12	22.24	22.22	22.26		
10	QPSK	25	24	22.11	22.08	22.19		
10	QPSK	50	0	22.20	22.17	22.22		
10	16QAM	1	0	22.70	22.97	22.69	23.00	0-1
10	16QAM	1	24	22.74	22.77	22.85		
10	16QAM	1	49	22.27	22.60	22.36		
10	16QAM	25	0	21.20	21.24	21.30	22.00	0-2
10	16QAM	25	12	21.16	21.26	21.31		
10	16QAM	25	24	21.14	21.07	21.21		
10	16QAM	50	0	21.15	21.19	21.21		

Channel				20775	21100	21425	Tune up Limit (dBm)	MPR (dB)
Frequency (MHz)				2502.5	2535	2567.5		
5	QPSK	1	0	23.27	23.34	23.27	24.00	0
5	QPSK	1	12	23.23	23.25	23.20		
5	QPSK	1	24	23.11	23.29	23.20		
5	QPSK	12	0	22.09	22.15	22.22	23.00	0-1
5	QPSK	12	6	22.34	22.24	22.24		
5	QPSK	12	11	22.20	22.18	22.20		
5	QPSK	25	0	22.21	22.21	22.23		
5	16QAM	1	0	22.45	22.53	22.51	23.00	0-1
5	16QAM	1	12	22.63	22.74	22.74		
5	16QAM	1	24	22.43	22.61	22.50		
5	16QAM	12	0	21.24	21.31	21.40	22.00	0-2
5	16QAM	12	6	21.26	21.27	21.39		
5	16QAM	12	11	21.20	21.18	21.33		
5	16QAM	25	0	21.19	21.21	21.27		

LTE Carrier Aggregation Conducted Power

General Note:

i. According to KDB941225 D05A v01, Uplink maximum output power measurement with downlink carrier aggregation active should be measured, using the highest output channel measured without downlink carrier aggregation, to confirm that uplink maximum output power with downlink carrier aggregation active remains within the specified tune-up tolerance limits and not more than ¼ dB higher than the maximum output measured without downlink carrier aggregation active.

ii. Uplink maximum output power with downlink carrier aggregation active does not show more than ¼ dB higher than the maximum output power without downlink carrier aggregation active, therefore SAR evaluation with downlink carrier aggregation active can be excluded.

iii. The device only supports downlink carrier aggregation. Uplink carrier aggregation is not supported. Power measurements were performed with two DL carriers for the Release 8 configuration that had the highest output power across all bandwidths, channels and RB configuration for each band.

iv. During the carrier aggregation conducted power measurements we have attention to throughput traffic to make sure all the power measurement is corrected.

Configure	PCC						SCC				Measured Power	
	LTE Band	BW (MHz)	Freq. (MHz)	Channel	UL# RB	UL RB Offset	LTE Band	BW (MHz)	Freq. (MHz)	Channel	LTE Rel 10 Tx. Power (dBm)	LTE Rel 8 Tx. Power (dBm)
Inter-Band	Band 2	20M	1860	18700	1	0	Band 12	10M	707.5	23095	23.20	23.21
	Band 2	20M	1880	18900	1	0	Band 12	10M	707.5	23095	23.09	23.11
	Band 2	20M	1900	19100	1	0	Band 12	10M	707.5	23095	23.20	23.27
	Band 12	10M	704	23060	1	0	Band 2	20M	1880	18900	23.60	23.62
	Band 12	10M	707.5	23095	1	0	Band 2	20M	1880	18900	23.80	23.85
	Band 12	10M	711	23130	1	0	Band 2	20M	1880	18900	23.65	23.71
	Band 2	10M	1860	18700	1	0	Band 17	10M	710	23790	23.20	23.21
	Band 2	10M	1880	18900	1	0	Band 17	10M	710	23790	23.09	23.11
	Band 2	10M	1900	19100	1	0	Band 17	10M	710	23790	23.20	23.27
	Band 17	10M	709	23780	1	0	Band 2	10M	1880	18900	23.60	23.63
	Band 17	10M	710	23790	1	0	Band 2	10M	1880	18900	23.65	23.69
	Band 17	10M	711	23800	1	0	Band 2	10M	1880	18900	23.58	23.60
	Band 4	20M	1720	20050	1	0	Band 12	10M	707.5	23095	23.00	23.01
	Band 4	20M	1732.5	20175	1	0	Band 12	10M	707.5	23095	23.05	23.09
	Band 4	20M	1745	20300	1	0	Band 12	10M	707.5	23095	23.01	23.08
	Band 12	10M	704	23060	1	0	Band 4	20M	1732.5	20175	23.60	23.62
	Band 12	10M	707.5	23095	1	0	Band 4	20M	1732.5	20175	23.80	23.85
	Band 12	10M	711	23130	1	0	Band 4	20M	1732.5	20175	23.65	23.71
	Band 4	20M	1720	20050	1	0	Band 17	10M	710	23790	23.00	23.01
	Band 4	20M	1732.5	20175	1	0	Band 17	10M	710	23790	23.05	23.09
	Band 4	20M	1745	20300	1	0	Band 17	10M	710	23790	23.01	23.08
	Band 17	10M	709	23780	1	0	Band 4	10M	1732.5	20175	23.60	23.63
	Band 17	10M	710	23790	1	0	Band 4	10M	1732.5	20175	23.65	23.69
	Band 17	10M	711	23800	1	0	Band 4	10M	1732.5	20175	23.58	23.60
	Band 2	20M	1720	20050	1	0	Band 29	10M			23.20	23.21
	Band 2	20M	1732.5	20175	1	0	Band 29	10M			23.09	23.11
	Band 2	20M	1745	20300	1	0	Band 29	10M			23.20	23.27
	Band 4	20M	1720	20050	1	0	Band 29	10M			23.00	23.01
	Band 4	20M	1732.5	20175	1	0	Band 29	10M			23.05	23.09
	Band 4	20M	1745	20300	1	0	Band 29	10M			23.01	23.08

<WLAN Conducted Power>

General Note:

1. Per KDB 248227 D01v02r01, SAR test reduction is determined according to 802.11 transmission mode configurations and certain exposure conditions with multiple test positions. In the 2.4 GHz band, separate SAR procedures are applied to DSSS and OFDM configurations to simplify DSSS test requirements. For OFDM, in both 2.4 and 5 GHz bands, an initial test configuration must be determined for each standalone and aggregated frequency band, according to the transmission mode configuration with the highest maximum output power specified for production units to perform SAR measurements. If the same highest maximum output power applies to different combinations of channel bandwidths, modulations and data rates, additional procedures are applied to determine which test configurations require SAR measurement. When applicable, an initial test position may be applied to reduce the number of SAR measurements required for next to the ear, UMPC mini-tablet or hotspot mode configurations with multiple test positions.
2. For 2.4 GHz 802.11b DSSS, either the initial test position procedure for multiple exposure test positions or the DSSS procedure for fixed exposure position is applied; these are mutually exclusive. For 2.4 GHz and 5 GHz OFDM configurations, the initial test configuration is applied to measure SAR using either the initial test position procedure for multiple exposure test position configurations or the initial test configuration procedures for fixed exposure test conditions. Based on the reported SAR of the measured configurations and maximum output power of the transmission mode configurations that are not included in the initial test configuration, the subsequent test configuration and initial test position procedures are applied to determine if SAR measurements are required for the remaining OFDM transmission configurations. In general, the number of test channels that require SAR measurement is minimized based on maximum output power measured for the test sample(s).
3. For OFDM transmission configurations in the 2.4 GHz and 5 GHz bands, When the same maximum power is specified for multiple transmission modes in a frequency band, the largest channel bandwidth, lowest order modulation, lowest data rate and lowest order 802.11a/g/n/ac mode is used for SAR measurement, on the highest measured output power channel for each frequency band.
4. DSSS and OFDM configurations are considered separately according to the required SAR procedures. SAR is measured in the initial test position using the 802.11 transmission mode configuration required by the DSSS procedure or initial test configuration and subsequent test configuration(s) according to the OFDM procedures.18 The initial test position procedure is described in the following:
   a. When the reported SAR of the initial test position is ≤ 0.4 W/kg, further SAR measurement is not required for the other test positions in that exposure configuration and 802.11 transmission mode combinations within the frequency band or aggregated band.
   b. When the reported SAR of the test position is > 0.4 W/kg, SAR is repeated for the 802.11 transmission mode configuration tested in the initial test position to measure the subsequent next closet/smallest test separation distance and maximum coupling test position on the highest maximum output power channel, until the report SAR is ≤ 0.8 W/kg or all required test position are tested.
   c. For all positions/configurations, when the reported SAR is > 0.8 W/kg, SAR is measured for these test positions/configurations on the subsequent next highest measured output power channel(s) until the reported SAR is ≤ 1.2 W/kg or all required channels are tested.

<WLAN 2.4GHz>

	Mode	Channel	Frequency (MHz)	Data Rate	Average power (dBm)	Tune-Up Limit	Duty Cycle %
2.4GHz WLAN	802.11b	CH 1	2412	1Mbps	13.44	14.50	99.04
		CH 6	2437		12.95	14.50	
		CH 11	2462		**13.95**	14.50	
	802.11g	CH 1	2412	6Mbps	11.16	12.00	93.61
		CH 6	2437		10.82	12.00	
		CH 11	2462		11.74	12.00	
	802.11n-HT20	CH 1	2412	MCS0	9.13	9.50	94.08
		CH 6	2437		8.51	9.50	
		CH 11	2462		9.17	9.50	
	802.11n-HT40	CH 3	2422	MCS0	9.93	10.00	90.86
		CH 6	2437		8.96	10.00	
		CH 9	2452		8.45	10.00	

<WLAN 5GHz>

	Mode	Channel	Frequency (MHz)	Data Rate	Average power (dBm)	Tune-Up Limit	Duty Cycle %
5.2GHz WLAN	802.11a	CH 36	5180	6Mbps	12.42	13.00	94.47
		CH 40	5200		12.58	13.00	
		CH 44	5220		**12.63**	13.00	
		CH 48	5240		12.56	13.00	
	802.11n-HT20	CH 36	5180	MCS0	10.78	11.50	94.13
		CH 40	5200		10.89	11.50	
		CH 44	5220		10.94	11.50	
		CH 48	5240		11.39	11.50	
	802.11n-HT40	CH 38	5190	MCS0	11.05	11.50	89.43
		CH 46	5230		11.39	11.50	
	802.11ac-VHT20	CH 36	5180	MCS0	7.93	8.50	94.23
		CH 40	5200		8.01	8.50	
		CH 44	5220		8.07	8.50	
		CH 48	5240		8.29	8.50	
	802.11ac-VHT40	CH 38	5190	MCS0	8.12	8.50	88.93
		CH 46	5230		8.38	8.50	
	802.11ac-VHT80	CH 42	5210	MCS0	7.97	8.50	82.14

	Mode	Channel	Frequency (MHz)	Data Rate	Average power (dBm)	Tune-Up Limit	Duty Cycle %
5.8GHz WLAN	802.11a	CH 149	5745	6Mbps	**10.20**	10.50	94.47
		CH 157	5785		9.99	10.50	
		CH 165	5825		9.50	10.50	
	802.11n-HT20	CH 149	5745	MCS0	10.10	10.50	94.13
		CH 157	5785		9.73	10.50	
		CH 165	5825		9.28	10.50	
	802.11n-HT40	CH 151	5755	MCS0	9.78	10.00	89.43
		CH 159	5795		9.63	10.00	
	802.11ac-VHT20	CH 149	5745	MCS0	8.71	9.00	94.23
		CH 157	5785		8.13	9.00	
		CH 165	5825		7.87	9.00	
	802.11ac-VHT40	CH 151	5755	MCS0	8.68	9.00	88.93
		CH 159	5795		8.49	9.00	
	802.11ac-VHT80	CH 155	5775	MCS0	8.00	8.50	82.14

13. Bluetooth Exclusions Applied

Mode Band	Average power(dBm)	
	Bluetooth v3.0+EDR	Bluetooth v4.1 LE
2.4GHz Bluetooth	2.50	2.50

Note:

1. Per KDB 447498 D01v05r02, the 1-g and 10-g SAR test exclusion thresholds for 100 MHz to 6 GHz at *test separation distances* ≤ 50 mm are determined by:
   [(*max. power of channel, including tune-up tolerance, mW*)/(*min. test separation distance, mm*)] ·[√f(GHz)] ≤ 3.0 for 1-g SAR and ≤ 7.5 for 10-g extremity SAR
   - f(GHz) is the RF channel transmit frequency in GHz
   - Power and distance are rounded to the nearest mW and mm before calculation
   - The result is rounded to one decimal place for comparison

Bluetooth Max Power (dBm)	Separation Distance (mm)	Frequency (GHz)	exclusion thresholds
2.5	5	2.48	0.6

Note:
Per KDB 447498 D01v05r02, when the minimum test separation distance is < 5 mm, a distance of 5 mm is applied to determine SAR test exclusion. The test exclusion threshold is 0.6 which is <= 3, SAR testing is not required.

14. Antenna Location

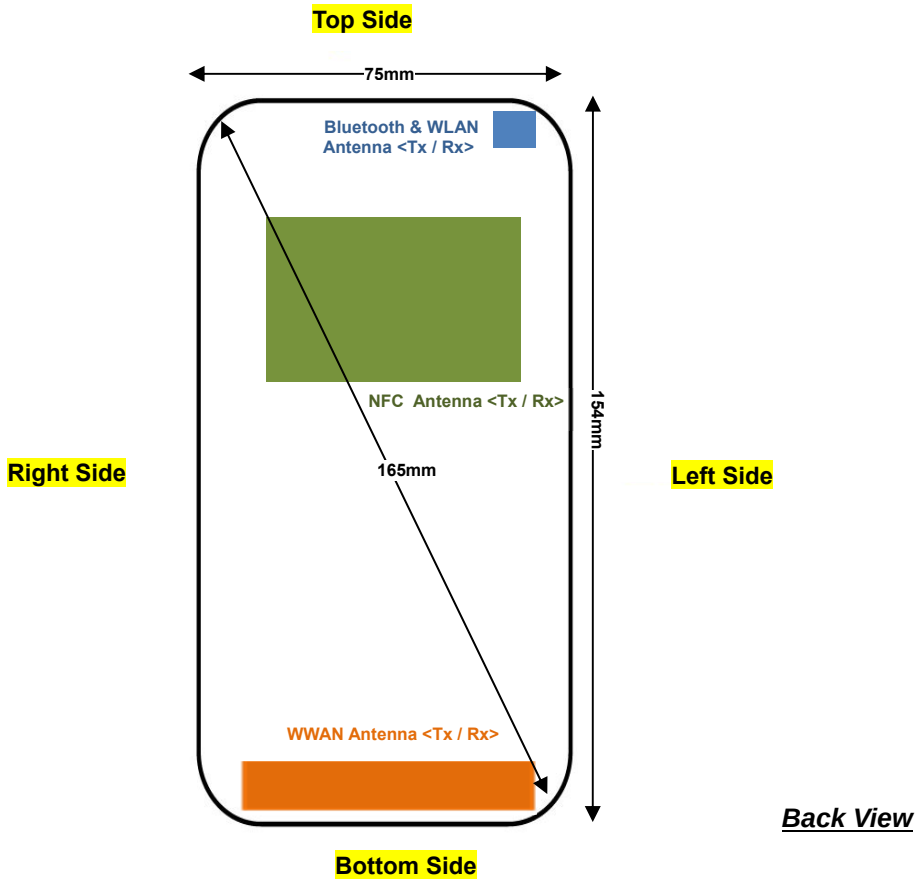

Distance of the Antenna to the EUT surface/edge						
Antennas	Back	Front	Top Side	Bottom Side	Right Side	Left Side
WWAN Main	≤ 25mm	≤ 25mm	142mm	≤ 25mm	≤ 25mm	≤ 25mm
BT&WLAN	≤ 25mm	≤ 25mm	≤ 25mm	138mm	63mm	≤ 25mm

Positions for SAR tests; Hotspot mode						
Antennas	Back	Front	Top Side	Bottom Side	Right Side	Left Side
WWAN Main	Yes	Yes	No	Yes	Yes	Yes
BT&WLAN	Yes	Yes	Yes	No	No	Yes

General Note:
Referring to KDB 941225 D06 v02, when the overall device length and width are ≥ 9cm*5cm, the test distance is 10 mm. SAR must be measured for all sides and surfaces with a transmitting antenna located within 25mm from that surface or edge

15. SAR Test Results

General Note:

1. Per KDB 447498 D01v05r02, the reported SAR is the measured SAR value adjusted for maximum tune-up tolerance.
   b. Tune-up scaling Factor = tune-up limit power (mW) / EUT RF power (mW), where tune-up limit is the maximum rated power among all production units.
   c. For SAR testing of WLAN signal with non-100% duty cycle, the measured SAR is scaled-up by the duty cycle scaling factor which is equal to "1/(duty cycle)"
   d. For WWAN: Reported SAR(W/kg)= Measured SAR(W/kg)*Tune-up Scaling Factor
   e. For WLAN: Reported SAR(W/kg)= Measured SAR(W/kg)* Duty Cycle scaling factor * Tune-up scaling factor
2. Per KDB 447498 D01v05r02, for each exposure position, testing of other required channels within the operating mode of a frequency band is not required when the *reported* 1-g or 10-g SAR for the mid-band or highest output power channel is:
   - ≤ 0.8 W/kg or 2.0 W/kg, for 1-g or 10-g respectively, when the transmission band is ≤ 100 MHz
   - ≤ 0.6 W/kg or 1.5 W/kg, for 1-g or 10-g respectively, when the transmission band is between 100 MHz and 200 MHz
   - ≤ 0.4 W/kg or 1.0 W/kg, for 1-g or 10-g respectively, when the transmission band is ≥ 200 MHz
3. Per KDB 648474 D04v01r02, when the reported SAR for a body-worn accessory measured without a headset connected to the handset is ≤ 1.2 W/kg, SAR testing with a headset connected to the handset is not required.

GSM Note:

1. Per KDB 941225 D01v03, considering the possibility of e.g. 3rd party VoIP operation for Head and body-worn SAR test reduction for GSM and GPRS and EDGE modes is determined by the source-based time-averaged output power including tune-up tolerance. The mode with highest specified time-averaged output power should be tested for SAR compliance in the applicable exposure conditions. For modes with the same specified maximum output power and tolerance, the higher number time-slot configuration should be tested. Therefore, the EUT was set in GPRS (2Tx slots) for GSM850/GSM1900.
2. Per KDB 941225 D01v03, for Hotspot SAR test reduction for GPRS and EDGE modes is determined by the source-based time-averaged output power including tune-up tolerance, for modes with the same specified maximum output power and tolerance, the higher number time-slot configuration should be tested, therefore, the EUT was set in GPRS (2Tx slots) for GSM850/GSM1900.

WCDMA Note:

1. Per KDB 941225 D01v03, SAR for next to the ear head / Hotspot / Body-worn exposure is measured using a 12.2 kbps RMC with TPC bits configured to all “1’s”.
2. Per KDB 941225 D01v03, RMC 12.2kbps setting is used to evaluate SAR. If the maximum output power and tune-up tolerance specified for production units in HSDPA / HSUPA / DC-HSDPA is ≤ ¼ dB higher than RMC 12.2Kbps or when the highest reported SAR of the RMC12.2Kbps is scaled by the ratio of specified maximum output power and tune-up tolerance of HSDPA / HSUPA / DC-HSDPA to RMC12.2Kbps and the adjusted SAR is ≤ 1.2 W/kg, SAR measurement is not required for HSDPA / HSUPA / DC-HSDPA.

LTE Note:

1. Per KDB 941225 D05v02r03, start with the largest channel bandwidth and measure SAR for QPSK with 1 RB allocation, using the RB offset and required test channel combination with the highest maximum output power for RB offsets at the upper edge, middle and lower edge of each required test channel.
2. Per KDB 941225 D05v02r03, 50% RB allocation for QPSK SAR testing follows 1RB QPSK allocation procedure.
3. Per KDB 941225 D05v02r03, For QPSK with 100% RB allocation, SAR is not required when the highest maximum output power for 100 % RB allocation is less than the highest maximum output power in 50% and 1 RB allocations and the highest reported SAR for 1 RB and 50% RB allocation are ≤ 0.8 W/kg. Otherwise, SAR is measured for the highest output power channel; and if the reported SAR is > 1.45 W/kg, the remaining required test channels must also be tested.
4. Per KDB 941225 D05v02r03, 16QAM output power for each RB allocation configuration is > not ½ dB higher than the same configuration in QPSK and the reported SAR for the QPSK configuration is ≤ 1.45 W/kg; Per KDB 941225 D05v02r03, 16QAM SAR testing is not required.
5. Per KDB 941225 D05v02r03, Smaller bandwidth output power for each RB allocation configuration is > not ½ dB higher than the same configuration in the largest supported bandwidth, and the reported SAR for the largest supported bandwidth is ≤ 1.45 W/kg; Per KDB 941225 D05v02r03, smaller bandwidth SAR testing is not required.

WLAN Note:

1. Per KDB 248227 D01v02r01, for 2.4GHz 802.11g/n SAR testing is not required when the highest reported SAR for DSSS is adjusted by the ratio of OFDM to DSSS specified maximum output power and the adjusted SAR is ≤ 1.2 W/kg.
2. When the reported SAR of the test position is > 0.4 W/kg, SAR is repeated for the 802.11 transmission mode configuration tested in the initial test position to measure the subsequent next closet/smallest test separation distance and maximum coupling test position on the highest maximum output power channel, until the report SAR is ≤ 0.8 W/kg or all required test position are tested.
3. For all positions / configurations, when the reported SAR is > 0.8 W/kg, SAR is measured for these test positions / configurations on the subsequent next highest measured output power channel(s) until the reported SAR is ≤ 1.2 W/kg or all required channels are tested.
4. This device 2.4GHz WLAN supports Hotspot operation, and 5.2GHz / 5.8 GHz supports WiFi Direct (GC only).
5. During SAR testing the WLAN transmission was verified using a spectrum analyzer.

15.1 Head SAR

<GSM SAR>

Plot No.	Band	Mode	Test Position	Ch.	Freq. (MHz)	Average Power (dBm)	Tune-Up Limit (dBm)	Tune-up Scaling Factor	Power Drift (dB)	Measured 1g SAR (W/kg)	Reported 1g SAR (W/kg)
	GSM850	GPRS (2 Tx slots)	Right Cheek	251	848.8	32.56	33.00	1.107	-0.07	0.382	0.423
#01	GSM850	GPRS (2 Tx slots)	Right Cheek	128	824.2	32.40	33.00	1.148	-0.11	0.374	**0.429**
	GSM850	GPRS (2 Tx slots)	Right Cheek	189	836.4	32.49	33.00	1.125	-0.03	0.372	0.418
	GSM850	GPRS (2 Tx slots)	Right Tilted	251	848.8	32.56	33.00	1.107	0.04	0.169	0.187
	GSM850	GPRS (2 Tx slots)	Left Cheek	251	848.8	32.56	33.00	1.107	0.08	0.270	0.299
	GSM850	GPRS (2 Tx slots)	Left Tilted	251	848.8	32.56	33.00	1.107	0.08	0.149	0.165
#02	GSM1900	GPRS (2 Tx Slots)	Right Cheek	810	1909.8	29.85	30.00	1.035	-0.07	0.095	**0.098**
	GSM1900	GPRS (2 Tx Slots)	Right Cheek	512	1850.2	29.31	30.00	1.172	-0.04	0.055	0.064
	GSM1900	GPRS (2 Tx Slots)	Right Cheek	661	1880	29.78	30.00	1.052	-0.09	0.055	0.058
	GSM1900	GPRS (2 Tx Slots)	Right Tilted	810	1909.8	29.85	30.00	1.035	0.06	0.003	0.004
	GSM1900	GPRS (2 Tx Slots)	Left Cheek	810	1909.8	29.85	30.00	1.035	0.03	0.058	0.060
	GSM1900	GPRS (2 Tx Slots)	Left Tilted	810	1909.8	29.85	30.00	1.035	0.05	0.044	0.046

<WCDMA SAR>

Plot No.	Band	Mode	Test Position	Ch.	Freq. (MHz)	Average Power (dBm)	Tune-Up Limit (dBm)	Tune-up Scaling Factor	Power Drift (dB)	Measured 1g SAR (W/kg)	Reported 1g SAR (W/kg)
	WCDMA Band V	RMC 12.2Kbps	Right Cheek	4132	826.4	23.99	24.00	1.002	-0.06	0.210	0.210
	WCDMA Band V	RMC 12.2Kbps	Right Cheek	4182	836.4	23.88	24.00	1.028	-0.12	0.227	0.233
#03	WCDMA Band V	RMC 12.2Kbps	Right Cheek	4233	846.6	23.98	24.00	1.005	-0.05	0.244	**0.245**
	WCDMA Band V	RMC 12.2Kbps	Right Tilted	4132	826.4	23.99	24.00	1.002	0.01	0.107	0.107
	WCDMA Band V	RMC 12.2Kbps	Left Cheek	4132	826.4	23.99	24.00	1.002	0.1	0.174	0.174
	WCDMA Band V	RMC 12.2Kbps	Left Tilted	4132	826.4	23.99	24.00	1.002	0	0.101	0.101
#04	WCDMA Band IV	RMC 12.2Kbps	Right Cheek	1312	1712.4	23.47	24.00	1.130	0.04	0.308	**0.348**
	WCDMA Band IV	RMC 12.2Kbps	Right Cheek	1413	1732.6	23.43	24.00	1.140	-0.01	0.304	0.347
	WCDMA Band IV	RMC 12.2Kbps	Right Cheek	1413	1752.6	23.45	24.00	1.135	0.1	0.284	0.322
	WCDMA Band IV	RMC 12.2Kbps	Right Tilted	1312	1712.4	23.47	24.00	1.130	0.1	0.127	0.143
	WCDMA Band IV	RMC 12.2Kbps	Left Cheek	1312	1712.4	23.47	24.00	1.130	0.07	0.195	0.220
	WCDMA Band IV	RMC 12.2Kbps	Left Tilted	1312	1712.4	23.47	24.00	1.130	-0.04	0.168	0.190
	WCDMA Band II	RMC 12.2Kbps	Right Cheek	9400	1880	23.58	24.00	1.102	-0.12	0.141	0.155
#05	WCDMA Band II	RMC 12.2Kbps	Right Cheek	9262	1852.4	23.57	24.00	1.104	-0.05	0.166	**0.183**
	WCDMA Band II	RMC 12.2Kbps	Right Cheek	9538	1907.6	23.50	24.00	1.122	0.07	0.114	0.128
	WCDMA Band II	RMC 12.2Kbps	Right Tilted	9400	1880	23.58	24.00	1.102	-0.02	0.009	0.010
	WCDMA Band II	RMC 12.2Kbps	Left Cheek	9400	1880	23.58	24.00	1.102	0.09	0.087	0.096
	WCDMA Band II	RMC 12.2Kbps	Left Tilted	9400	1880	23.58	24.00	1.102	0.06	0.065	0.072

<LTE SAR>

Plot No.	Band	BW (MHz)	Modulation	RB Size	RB offset	Test Position	Ch.	Freq. (MHz)	Average Power (dBm)	Tune-Up Limit (dBm)	Tune-up Scaling Factor	Power Drift (dB)	Measured 1g SAR (W/kg)	Reported 1g SAR (W/kg)
#06	LTE Band 12	10M	QPSK	1RB	0 offset	Right Cheek	23095	707.5	23.85	24.50	1.161	-0.06	0.143	**0.166**
	LTE Band 12	10M	QPSK	25RB	12 offset	Right Cheek	23095	707.5	22.71	23.50	1.199	-0.02	0.127	0.152
	LTE Band 12	10M	QPSK	1RB	0 offset	Right Tilted	23095	707.5	23.85	24.50	1.161	-0.14	0.026	0.030
	LTE Band 12	10M	QPSK	25RB	12 offset	Right Tilted	23095	707.5	22.71	23.50	1.199	-0.18	0.024	0.029
	LTE Band 12	10M	QPSK	1RB	0 offset	Left Cheek	23095	707.5	23.85	24.50	1.161	0.06	0.113	0.131
	LTE Band 12	10M	QPSK	25RB	12 offset	Left Cheek	23095	707.5	22.71	23.50	1.199	0.09	0.097	0.116
	LTE Band 12	10M	QPSK	1RB	0 offset	Left Tilted	23095	707.5	23.85	24.50	1.161	0.02	0.046	0.053
	LTE Band 12	10M	QPSK	25RB	12 offset	Left Tilted	23095	707.5	22.71	23.50	1.199	0	0.040	0.048
#07	LTE Band 17	10M	QPSK	1RB	0 offset	Right Cheek	23790	710	23.69	24.50	1.205	-0.03	0.158	**0.190**
	LTE Band 17	10M	QPSK	25RB	12 offset	Right Cheek	23800	711	22.66	23.50	1.213	0.08	0.126	0.153
	LTE Band 17	10M	QPSK	1RB	0 offset	Right Tilted	23790	710	23.69	24.50	1.205	-0.05	0.030	0.036
	LTE Band 17	10M	QPSK	25RB	12 offset	Right Tilted	23800	711	22.66	23.50	1.213	-0.18	0.023	0.028
	LTE Band 17	10M	QPSK	1RB	0 offset	Left Cheek	23790	710	23.69	24.50	1.205	0.07	0.122	0.147
	LTE Band 17	10M	QPSK	25RB	12 offset	Left Cheek	23800	711	22.66	23.50	1.213	0.1	0.098	0.119
	LTE Band 17	10M	QPSK	1RB	0 offset	Left Tilted	23790	710	23.69	24.50	1.205	-0.16	0.051	0.061
	LTE Band 17	10M	QPSK	25RB	12 offset	Left Tilted	23800	711	22.66	23.50	1.213	-0.01	0.039	0.047
#08	LTE Band 13	10M	QPSK	1RB	0 offset	Right Cheek	23230	782	22.96	24.50	1.426	-0.01	0.142	**0.202**
	LTE Band 13	10M	QPSK	25RB	0 offset	Right Cheek	23230	782	21.85	23.50	1.462	-0.01	0.110	0.161
	LTE Band 13	10M	QPSK	1RB	0 offset	Right Tilted	23230	782	22.96	24.50	1.426	-0.07	0.078	0.111
	LTE Band 13	10M	QPSK	25RB	0 offset	Right Tilted	23230	782	21.85	23.50	1.462	-0.15	0.017	0.025
	LTE Band 13	10M	QPSK	1RB	0 offset	Left Cheek	23230	782	22.96	24.50	1.426	0.05	0.107	0.153
	LTE Band 13	10M	QPSK	25RB	0 offset	Left Cheek	23230	782	21.85	23.50	1.462	0.05	0.085	0.124
	LTE Band 13	10M	QPSK	1RB	0 offset	Left Tilted	23230	782	22.96	24.50	1.426	0.18	0.054	0.077
	LTE Band 13	10M	QPSK	25RB	0 offset	Left Tilted	23230	782	21.85	23.50	1.462	0.15	0.045	0.066
	LTE Band 5	10M	QPSK	1RB	0 offset	Right Cheek	20525	836.5	23.74	24.50	1.191	-0.06	0.196	0.233
	LTE Band 5	10M	QPSK	1RB	0 offset	Right Cheek	20450	829	23.71	24.50	1.199	0.02	0.203	0.243
#09	LTE Band 5	10M	QPSK	1RB	0 offset	Right Cheek	20600	844	23.69	24.50	1.205	0.05	0.223	**0.269**
	LTE Band 5	10M	QPSK	25RB	0 offset	Right Cheek	20525	836.5	22.70	23.50	1.202	0	0.171	0.206
	LTE Band 5	10M	QPSK	1RB	0 offset	Right Tilted	20525	836.5	23.74	24.50	1.191	-0.19	0.115	0.137
	LTE Band 5	10M	QPSK	25RB	0 offset	Right Tilted	20525	836.5	22.70	23.50	1.202	-0.11	0.090	0.108
	LTE Band 5	10M	QPSK	1RB	0 offset	Left Cheek	20525	836.5	23.74	24.50	1.191	0.03	0.163	0.194
	LTE Band 5	10M	QPSK	25RB	0 offset	Left Cheek	20525	836.5	22.70	23.50	1.202	0.06	0.126	0.151
	LTE Band 5	10M	QPSK	1RB	0 offset	Left Tilted	20525	836.5	23.74	24.50	1.191	0.06	0.093	0.111
	LTE Band 5	10M	QPSK	25RB	0 offset	Left Tilted	20525	836.5	22.70	23.50	1.202	0.1	0.071	0.085
	LTE Band 4	20M	QPSK	1RB	0 offset	Right Cheek	20175	1732.5	23.09	24.00	1.233	0.06	0.217	0.268
	LTE Band 4	20M	QPSK	1RB	0 offset	Right Cheek	20050	1720	23.01	24.00	1.256	-0.18	0.278	0.349
#10	LTE Band 4	20M	QPSK	1RB	0 offset	Right Cheek	20300	1745	23.08	24.00	1.236	0	0.284	**0.351**
	LTE Band 4	20M	QPSK	50RB	0 offset	Right Cheek	20175	1732.5	21.68	23.00	1.355	-0.01	0.193	0.262
	LTE Band 4	20M	QPSK	1RB	0 offset	Right Tilted	20175	1732.5	23.09	24.00	1.233	0.03	0.085	0.105
	LTE Band 4	20M	QPSK	50RB	0 offset	Right Tilted	20175	1732.5	21.68	23.00	1.355	-0.03	0.066	0.089
	LTE Band 4	20M	QPSK	1RB	0 offset	Left Cheek	20175	1732.5	23.09	24.00	1.233	0.05	0.147	0.181
	LTE Band 4	20M	QPSK	50RB	0 offset	Left Cheek	20175	1732.5	21.68	23.00	1.355	0.09	0.113	0.153
	LTE Band 4	20M	QPSK	1RB	0 offset	Left Tilted	20175	1732.5	23.09	24.00	1.233	0.02	0.106	0.131
	LTE Band 4	20M	QPSK	50RB	0 offset	Left Tilted	20175	1732.5	21.68	23.00	1.355	0.06	0.076	0.103

Plot No.	Band	BW (MHz)	Modulation	RB Size	RB offset	Test Position	Ch.	Freq. (MHz)	Average Power (dBm)	Tune-Up Limit (dBm)	Tune-up Scaling Factor	Power Drift (dB)	Measured 1g SAR (W/kg)	Reported 1g SAR (W/kg)
	LTE Band 2	20M	QPSK	1RB	0 offset	Right Cheek	19100	1900	23.27	23.50	1.054	0.15	0.129	0.136
#11	LTE Band 2	20M	QPSK	1RB	0 offset	Right Cheek	18700	1860	23.21	23.50	1.069	0.03	0.152	**0.162**
	LTE Band 2	20M	QPSK	1RB	0 offset	Right Cheek	18900	1880	23.11	23.50	1.094	-0.13	0.119	0.130
	LTE Band 2	20M	QPSK	50RB	0 offset	Right Cheek	18900	1880	21.73	22.50	1.194	0.12	0.097	0.116
	LTE Band 2	20M	QPSK	1RB	0 offset	Right Tilted	19100	1900	23.27	23.50	1.054	0.19	0.045	0.047
	LTE Band 2	20M	QPSK	50RB	0 offset	Right Tilted	18900	1880	21.73	22.50	1.194	-0.1	0.054	0.064
	LTE Band 2	20M	QPSK	1RB	0 offset	Left Cheek	19100	1900	23.27	23.50	1.054	0.19	0.101	0.106
	LTE Band 2	20M	QPSK	50RB	0 offset	Left Cheek	18900	1880	21.73	22.50	1.194	0.19	0.070	0.084
	LTE Band 2	20M	QPSK	1RB	0 offset	Left Tilted	19100	1900	23.27	23.50	1.054	0.17	0.075	0.079
	LTE Band 2	20M	QPSK	50RB	0 offset	Left Tilted	18900	1880	21.73	22.50	1.194	0.13	0.054	0.064
	LTE Band 30	10M	QPSK	1RB	0 offset	Right Cheek	27710	2310	20.92	22.00	1.282	-0.09	0.072	0.092
	LTE Band 30	10M	QPSK	25RB	0 offset	Right Cheek	27710	2310	19.82	21.00	1.312	0.01	0.056	0.073
	LTE Band 30	10M	QPSK	1RB	0 offset	Right Tilted	27710	2310	20.92	22.00	1.282	-0.12	0.031	0.040
	LTE Band 30	10M	QPSK	25RB	0 offset	Right Tilted	27710	2310	19.82	21.00	1.312	-0.15	0.024	0.031
#12	LTE Band 30	10M	QPSK	1RB	0 offset	Left Cheek	27710	2310	20.92	22.00	1.282	0.08	0.103	**0.132**
	LTE Band 30	10M	QPSK	25RB	0 offset	Left Cheek	27710	2310	19.82	21.00	1.312	-0.02	0.072	0.094
	LTE Band 30	10M	QPSK	1RB	0 offset	Left Tilted	27710	2310	20.92	22.00	1.282	0.03	0.026	0.033
	LTE Band 30	10M	QPSK	25RB	0 offset	Left Tilted	27710	2310	19.82	21.00	1.312	0.11	0.020	0.026
	LTE Band 7	20M	QPSK	1RB	0 offset	Right Cheek	20850	2510	23.39	24.00	1.151	-0.03	0.074	0.085
	LTE Band 7	20M	QPSK	50RB	0 offset	Right Cheek	20850	2510	22.65	23.00	1.084	0.02	0.046	0.050
	LTE Band 7	20M	QPSK	1RB	0 offset	Right Tilted	20850	2510	23.39	24.00	1.151	-0.15	0.036	0.041
	LTE Band 7	20M	QPSK	50RB	0 offset	Right Tilted	20850	2510	22.65	23.00	1.084	-0.18	0.023	0.025
	LTE Band 7	20M	QPSK	1RB	0 offset	Left Cheek	20850	2510	23.39	24.00	1.151	-0.03	0.096	0.110
#13	LTE Band 7	20M	QPSK	1RB	0 offset	Left Cheek	21100	2535	23.08	24.00	1.236	0.05	0.102	**0.126**
	LTE Band 7	20M	QPSK	1RB	0 offset	Left Cheek	21350	2560	22.98	24.00	1.265	0.11	0.053	0.067
	LTE Band 7	20M	QPSK	50RB	0 offset	Left Cheek	20850	2510	22.65	23.00	1.084	0.02	0.063	0.068
	LTE Band 7	20M	QPSK	1RB	0 offset	Left Tilted	20850	2510	23.39	24.00	1.151	0.02	0.035	0.040
	LTE Band 7	20M	QPSK	50RB	0 offset	Left Tilted	20850	2510	22.65	23.00	1.084	0.01	0.022	0.024

<WLAN2.4GHz SAR>

Plot No.	Band	Mode	Test Position	Ch.	Freq. (MHz)	Average Power (dBm)	Tune-Up Limit (dBm)	Tune-up Scaling Factor	Duty Cycle %	Duty Cycle Scaling Factor	Power Drift (dB)	Area Scan Max. SAR (W/kg)	Measured 1g SAR (W/kg)	Reported 1g SAR (W/kg)
	WLAN 2.4GHz	802.11b_1Mbps	Right Cheek	11	2462	13.95	14.50	1.135	99.04	1.010	-0.15	1.239	0.697	0.799
	WLAN 2.4GHz	802.11b_1Mbps	Right Tilted	11	2462	13.95	14.50	1.135	99.04	1.010	-0.02	0.700	0.418	0.479
	WLAN 2.4GHz	802.11b_1Mbps	Left Cheek	11	2462	13.95	14.50	1.135	99.04	1.010		0.419		
	WLAN 2.4GHz	802.11b_1Mbps	Left Tilted	11	2462	13.95	14.50	1.135	99.04	1.010		0.367		
	WLAN 2.4GHz	802.11b_1Mbps	Right Cheek	1	2412	13.44	14.50	1.276	99.04	1.010	-0.07	0.785	0.453	0.584
#14	WLAN 2.4GHz	802.11b_1Mbps	Right Cheek	6	2437	12.95	14.50	1.429	99.04	1.010	-0.06	1.037	0.594	**0.857**

<WLAN 5GHz SAR>

Plot No.	Band	Mode	Test Position	Ch.	Freq. (MHz)	Average Power (dBm)	Tune-Up Limit (dBm)	Tune-up Scaling Factor	Duty Cycle %	Duty Cycle Scaling Factor	Power Drift (dB)	Area Scan Max. SAR (W/kg)	Measured 1g SAR (W/kg)	Reported 1g SAR (W/kg)
	WLAN 5.2GHz	802.11a_6Mbps	Right Cheek	44	5220	12.63	13.00	1.089	94.47	1.059	0.05	1.974	0.737	0.850
	WLAN 5.2GHz	802.11a_6Mbps	Right Tilted	44	5220	12.63	13.00	1.089	94.47	1.059	0.08	1.408	0.561	0.647
	WLAN 5.2GHz	802.11a_6Mbps	Left Cheek	44	5220	12.63	13.00	1.089	94.47	1.059		1.070		
	WLAN 5.2GHz	802.11a_6Mbps	Left Tilted	44	5220	12.63	13.00	1.089	94.47	1.059		0.844		
	WLAN 5.2GHz	802.11a_6Mbps	Right Cheek	40	5200	12.58	13.00	1.102	94.47	1.059	0.1	1.679	0.662	0.772
	WLAN 5.2GHz	802.11a_6Mbps	Right Cheek	36	5180	12.42	13.00	1.143	94.47	1.059	0.08	1.815	0.706	0.854
#15	WLAN 5.2GHz	802.11a_6Mbps	Right Cheek	48	5240	12.56	13.00	1.107	94.47	1.059	0.16	2.384	0.919	**1.077**
	WLAN 5.8GHz	802.11a_6Mbps	Right Cheek	149	5745	10.20	10.50	1.072	94.47	1.059	0.09	2.778	0.979	1.111
	WLAN 5.8GHz	802.11a_6Mbps	Right Tilted	149	5745	10.20	10.50	1.072	94.47	1.059	0.08	2.524	0.814	0.924
	WLAN 5.8GHz	802.11a_6Mbps	Left Cheek	149	5745	10.20	10.50	1.072	94.47	1.059	0.17	2.232	0.809	0.918
	WLAN 5.8GHz	802.11a_6Mbps	Left Tilted	149	5745	10.20	10.50	1.072	94.47	1.059	0.15	1.705	0.700	0.794
	WLAN 5.8GHz	802.11a_6Mbps	Right Cheek	157	5785	9.99	10.50	1.125	94.47	1.059	0.09	2.766	0.938	1.117
#16	WLAN 5.8GHz	802.11a_6Mbps	Right Cheek	165	5825	9.50	10.50	1.259	94.47	1.059	0.11	2.355	0.858	**1.144**
	WLAN 5.8GHz	802.11a_6Mbps	Right Tilted	157	5785	9.99	10.50	1.125	94.47	1.059	0.14	2.067	0.746	0.888
	WLAN 5.8GHz	802.11a_6Mbps	Left Cheek	157	5785	9.99	10.50	1.125	94.47	1.059	0.03	2.285	0.774	0.922

15.2 Hotspot SAR

Distance of the Antenna to the EUT surface/edge						
Antennas	Back	Front	Top Side	Bottom Side	Right Side	Left Side
WWAN Main	≤ 25mm	≤ 25mm	142mm	≤ 25mm	≤ 25mm	≤ 25mm
BT&WLAN	≤ 25mm	≤ 25mm	≤ 25mm	138mm	63mm	≤ 25mm

Positions for SAR tests; Hotspot mode						
Antennas	Back	Front	Top Side	Bottom Side	Right Side	Left Side
WWAN Main	Yes	Yes	No	Yes	Yes	Yes
BT&WLAN	Yes	Yes	Yes	No	No	Yes

General Note:
Referring to KDB 941225 D06 v02, when the overall device length and width are ≥ 9cm*5cm, the test distance is 10 mm. SAR must be measured for all sides and surfaces with a transmitting antenna located within 25mm from that surface or edge

<GSM SAR>

Plot No.	Band	Mode	Test Position	Gap (mm)	Ch.	Freq. (MHz)	Average Power (dBm)	Tune-Up Limit (dBm)	Tune-up Scaling Factor	Power Drift (dB)	Measured 1g SAR (W/kg)	Reported 1g SAR (W/kg)
	GSM850	GPRS (2 Tx slots)	Front	10	251	848.8	32.56	33.00	1.107	-0.02	0.318	0.352
	GSM850	GPRS (2 Tx slots)	Back	10	251	848.8	32.56	33.00	1.107	0.02	1.010	1.118
	GSM850	GPRS (2 Tx slots)	Back	10	128	824.2	32.40	33.00	1.148	0.04	1.030	1.183
#17	GSM850	GPRS (2 Tx slots)	Back	10	189	836.4	32.49	33.00	1.125	0.07	1.060	**1.192**
	GSM850	GPRS (2 Tx slots)	Left Side	10	251	848.8	32.56	33.00	1.107	-0.14	0.315	0.349
	GSM850	GPRS (2 Tx slots)	Right Side	10	251	848.8	32.56	33.00	1.107	0.03	0.612	0.677
	GSM850	GPRS (2 Tx slots)	Bottom Side	10	251	848.8	32.56	33.00	1.107	-0.1	0.301	0.333
	GSM1900	GPRS (2 Tx slots)	Front	10	810	1909.8	29.85	30.00	1.035	-0.1	0.349	0.361
	GSM1900	GPRS (2 Tx slots)	Back	10	810	1909.8	29.85	30.00	1.035	0.05	0.672	0.696
	GSM1900	GPRS (2 Tx slots)	Left Side	10	810	1909.8	29.85	30.00	1.035	0.13	0.050	0.052
	GSM1900	GPRS (2 Tx slots)	Right Side	10	810	1909.8	29.85	30.00	1.035	0.01	0.084	0.087
#18	GSM1900	GPRS (2 Tx slots)	Bottom Side	10	810	1909.8	29.85	30.00	1.035	-0.17	0.708	**0.733**
	GSM1900	GPRS (2 Tx slots)	Bottom Side	10	512	1850.2	29.31	30.00	1.172	-0.12	0.591	0.693
	GSM1900	GPRS (2 Tx slots)	Bottom Side	10	661	1880	29.78	30.00	1.052	-0.12	0.654	0.688
	GSM1900	GPRS (2 Tx slots)	Back	10	512	1850.2	29.31	30.00	1.172	-0.01	0.521	0.611
	GSM1900	GPRS (2 Tx slots)	Back	10	661	1880	29.78	30.00	1.052	-0.02	0.544	0.572

<WCDMA SAR>

Plot No.	Band	Mode	Test Position	Gap (mm)	Ch.	Freq. (MHz)	Average Power (dBm)	Tune-Up Limit (dBm)	Tune-up Scaling Factor	Power Drift (dB)	Measured 1g SAR (W/kg)	Reported 1g SAR (W/kg)
	WCDMA Band V	RMC12.2Kbps	Front	10	4132	826.4	23.99	24.00	1.002	0	0.189	0.189
	WCDMA Band V	RMC12.2Kbps	Back	10	4132	826.4	23.99	24.00	1.002	0.11	0.544	0.545
	WCDMA Band V	RMC12.2Kbps	Back	10	4182	836.4	23.88	24.00	1.028	0.13	0.589	0.606
#19	WCDMA Band V	RMC12.2Kbps	Back	10	4233	846.6	23.98	24.00	1.005	0.14	0.628	**0.631**
	WCDMA Band V	RMC12.2Kbps	Left Side	10	4132	826.4	23.99	24.00	1.002	0.03	0.278	0.279
	WCDMA Band V	RMC12.2Kbps	Right Side	10	4132	826.4	23.99	24.00	1.002	-0.07	0.467	0.468
	WCDMA Band V	RMC12.2Kbps	Bottom Side	10	4132	826.4	23.99	24.00	1.002	-0.04	0.137	0.137
	WCDMA Band IV	RMC12.2Kbps	Front	10	1312	1712.4	23.47	24.00	1.130	0.13	0.549	0.620
	WCDMA Band IV	RMC12.2Kbps	Back	10	1312	1712.4	23.47	24.00	1.130	-0.02	0.772	0.872
	WCDMA Band IV	RMC12.2Kbps	Back	10	1413	1732.6	23.43	24.00	1.140	-0.01	0.918	1.047
#20	WCDMA Band IV	RMC12.2Kbps	Back	10	1513	1752.6	23.45	24.00	1.135	0	1.000	**1.135**
	WCDMA Band IV	RMC12.2Kbps	Left Side	10	1312	1712.4	23.47	24.00	1.130	-0.05	0.244	0.276
	WCDMA Band IV	RMC12.2Kbps	Right Side	10	1312	1712.4	23.47	24.00	1.130	-0.03	0.271	0.306
	WCDMA Band IV	RMC12.2Kbps	Bottom Side	10	1312	1712.4	23.47	24.00	1.130	-0.07	0.566	0.639
	WCDMA Band II	RMC12.2Kbps	Front	10	9400	1880	23.58	24.00	1.102	0.02	0.449	0.495
	WCDMA Band II	RMC12.2Kbps	Back	10	9400	1880	23.58	24.00	1.102	0.05	0.780	0.859
	WCDMA Band II	RMC12.2Kbps	Back	10	9262	1852.4	23.57	24.00	1.104	0.17	0.797	0.880
	WCDMA Band II	RMC12.2Kbps	Back	10	9538	1907.6	23.50	24.00	1.122	0	0.776	0.871
	WCDMA Band II	RMC12.2Kbps	Left Side	10	9400	1880	23.58	24.00	1.102	-0.1	0.076	0.084
	WCDMA Band II	RMC12.2Kbps	Right Side	10	9400	1880	23.58	24.00	1.102	-0.15	0.115	0.127
#21	WCDMA Band II	RMC12.2Kbps	Bottom Side	10	9400	1880	23.58	24.00	1.102	-0.06	0.854	**0.941**
	WCDMA Band II	RMC12.2Kbps	Bottom Side	10	9262	1852.4	23.57	24.00	1.104	0.01	0.831	0.917
	WCDMA Band II	RMC12.2Kbps	Bottom Side	10	9538	1907.6	23.50	24.00	1.122	-0.12	0.828	0.929

<LTE SAR>

Plot No.	Band	BW (MHz)	Modulation	RB Size	RB offset	Test Position	Gap (mm)	Ch.	Freq. (MHz)	Average Power (dBm)	Tune-Up Limit (dBm)	Tune-up Scaling Factor	Power Drift (dB)	Measured 1g SAR (W/kg)	Reported 1g SAR (W/kg)
	LTE Band 12	10M	QPSK	1RB	0 offset	Front	10	23095	707.5	23.85	24.50	1.161	-0.04	0.175	0.203
	LTE Band 12	10M	QPSK	25RB	12 offset	Front	10	23095	707.5	22.71	23.50	1.199	0.01	0.153	0.184
	LTE Band 12	10M	QPSK	1RB	0 offset	Back	10	23095	707.5	23.85	24.50	1.161	-0.13	0.317	0.368
	LTE Band 12	10M	QPSK	25RB	12 offset	Back	10	23095	707.5	22.71	23.50	1.199	-0.14	0.276	0.331
	LTE Band 12	10M	QPSK	1RB	0 offset	Left Side	10	23095	707.5	23.85	24.50	1.161	-0.01	0.204	0.237
	LTE Band 12	10M	QPSK	25RB	12 offset	Left Side	10	23095	707.5	22.71	23.50	1.199	-0.03	0.182	0.218
#22	LTE Band 12	10M	QPSK	1RB	0 offset	Right Side	10	23095	707.5	23.85	24.50	1.161	-0.01	0.339	**0.394**
	LTE Band 12	10M	QPSK	25RB	12 offset	Right Side	10	23095	707.5	22.71	23.50	1.199	0.02	0.294	0.353
	LTE Band 12	10M	QPSK	1RB	0 offset	Bottom Side	10	23095	707.5	23.85	24.50	1.161	-0.11	0.073	0.085
	LTE Band 12	10M	QPSK	25RB	12 offset	Bottom Side	10	23095	707.5	22.71	23.50	1.199	-0.13	0.065	0.078
	LTE Band 17	10M	QPSK	1RB	0 offset	Front	10	23790	710	23.69	24.50	1.205	0.19	0.188	0.227
	LTE Band 17	10M	QPSK	25RB	12 offset	Front	10	23800	711	22.66	23.50	1.213	0.14	0.151	0.183
	LTE Band 17	10M	QPSK	1RB	0 offset	Back	10	23790	710	23.69	24.50	1.205	-0.08	0.349	0.421
	LTE Band 17	10M	QPSK	25RB	12 offset	Back	10	23800	711	22.66	23.50	1.213	-0.07	0.281	0.341
	LTE Band 17	10M	QPSK	1RB	0 offset	Left Side	10	23790	710	23.69	24.50	1.205	-0.04	0.216	0.260
	LTE Band 17	10M	QPSK	25RB	12 offset	Left Side	10	23800	711	22.66	23.50	1.213	0.02	0.183	0.222
#23	LTE Band 17	10M	QPSK	1RB	0 offset	Right Side	10	23790	710	23.69	24.50	1.205	0	0.363	**0.437**
	LTE Band 17	10M	QPSK	25RB	12 offset	Right Side	10	23800	711	22.66	23.50	1.213	-0.01	0.299	0.363
	LTE Band 17	10M	QPSK	1RB	0 offset	Bottom Side	10	23790	710	23.69	24.50	1.205	-0.05	0.081	0.098
	LTE Band 17	10M	QPSK	25RB	12 offset	Bottom Side	10	23800	711	22.66	23.50	1.213	-0.04	0.068	0.083
	LTE Band 13	10M	QPSK	1RB	0 offset	Front	10	23230	782	22.96	24.50	1.426	-0.04	0.173	0.247
	LTE Band 13	10M	QPSK	25RB	0 offset	Front	10	23230	782	21.85	23.50	1.462	-0.01	0.136	0.199
#24	LTE Band 13	10M	QPSK	1RB	0 offset	Back	10	23230	782	22.96	24.50	1.426	0.06	0.361	**0.515**
	LTE Band 13	10M	QPSK	25RB	0 offset	Back	10	23230	782	21.85	23.50	1.462	-0.01	0.282	0.412
	LTE Band 13	10M	QPSK	1RB	0 offset	Left Side	10	23230	782	22.96	24.50	1.426	-0.16	0.239	0.341
	LTE Band 13	10M	QPSK	25RB	0 offset	Left Side	10	23230	782	21.85	23.50	1.462	0	0.189	0.276
	LTE Band 13	10M	QPSK	1RB	0 offset	Right Side	10	23230	782	22.96	24.50	1.426	0.07	0.356	0.508
	LTE Band 13	10M	QPSK	25RB	0 offset	Right Side	10	23230	782	21.85	23.50	1.462	-0.01	0.281	0.411
	LTE Band 13	10M	QPSK	1RB	0 offset	Bottom Side	10	23230	782	22.96	24.50	1.426	0.15	0.104	0.148
	LTE Band 13	10M	QPSK	25RB	0 offset	Bottom Side	10	23230	782	21.85	23.50	1.462	-0.04	0.081	0.118
	LTE Band 5	10M	QPSK	1RB	0 offset	Front	10	20525	836.5	23.74	24.50	1.191	0	0.210	0.250
	LTE Band 5	10M	QPSK	25RB	0 offset	Front	10	20525	836.5	22.70	23.50	1.202	0.01	0.166	0.200
	LTE Band 5	10M	QPSK	1RB	0 offset	Back	10	20525	836.5	23.74	24.50	1.191	0.06	0.538	0.641
	LTE Band 5	10M	QPSK	1RB	0 offset	Back	10	20450	829	23.71	24.50	1.199	-0.04	0.488	0.585
#25	LTE Band 5	10M	QPSK	1RB	0 offset	Back	10	20600	844	23.69	24.50	1.205	0.05	0.566	**0.682**
	LTE Band 5	10M	QPSK	25RB	0 offset	Back	10	20525	836.5	22.70	23.50	1.202	0.05	0.427	0.513
	LTE Band 5	10M	QPSK	1RB	0 offset	Left Side	10	20525	836.5	23.74	24.50	1.191	0.02	0.142	0.169
	LTE Band 5	10M	QPSK	25RB	0 offset	Left Side	10	20525	836.5	22.70	23.50	1.202	-0.05	0.110	0.132
	LTE Band 5	10M	QPSK	1RB	0 offset	Right Side	10	20525	836.5	23.74	24.50	1.191	0.02	0.334	0.398
	LTE Band 5	10M	QPSK	25RB	0 offset	Right Side	10	20525	836.5	22.70	23.50	1.202	0	0.264	0.317
	LTE Band 5	10M	QPSK	1RB	0 offset	Bottom Side	10	20525	836.5	23.74	24.50	1.191	0	0.157	0.187
	LTE Band 5	10M	QPSK	25RB	0 offset	Bottom Side	10	20525	836.5	22.70	23.50	1.202	-0.04	0.125	0.150

Plot No.	Band	BW (MHz)	Modulation	RB Size	RB offset	Test Position	Gap (mm)	Ch.	Freq. (MHz)	Average Power (dBm)	Tune-Up Limit (dBm)	Tune-up Scaling Factor	Power Drift (dB)	Measured 1g SAR (W/kg)	Reported 1g SAR (W/kg)
	LTE Band 4	20M	QPSK	1RB	0 offset	Front	10	20175	1732.5	23.09	24.00	1.233	0.1	0.563	0.694
	LTE Band 4	20M	QPSK	50RB	0 offset	Front	10	20175	1732.5	21.68	23.00	1.355	0.09	0.417	0.565
	LTE Band 4	20M	QPSK	1RB	0 offset	Back	10	20175	1732.5	23.09	24.00	1.233	0.05	0.796	0.982
	LTE Band 4	20M	QPSK	1RB	0 offset	Back	10	20050	1720	23.01	24.00	1.256	-0.06	0.744	0.934
#26	LTE Band 4	20M	QPSK	1RB	0 offset	Back	10	20300	1745	23.08	24.00	1.236	0.1	0.896	**1.107**
	LTE Band 4	20M	QPSK	50RB	0 offset	Back	10	20175	1732.5	21.68	23.00	1.355	-0.01	0.624	0.846
	LTE Band 4	20M	QPSK	50RB	0 offset	Back	10	20050	1720	21.61	23.00	1.377	0.01	0.554	0.763
	LTE Band 4	20M	QPSK	50RB	0 offset	Back	10	20300	1745	21.67	23.00	1.358	-0.1	0.661	0.898
	LTE Band 4	20M	QPSK	100RB	0 offset	Back	10	20175	1732.5	21.46	23.00	1.426	0.04	0.603	0.860
	LTE Band 4	20M	QPSK	1RB	0 offset	Left Side	10	20175	1732.5	23.09	24.00	1.233	-0.03	0.326	0.402
	LTE Band 4	20M	QPSK	50RB	0 offset	Left Side	10	20175	1732.5	21.68	23.00	1.355	0.01	0.218	0.295
	LTE Band 4	20M	QPSK	1RB	0 offset	Right Side	10	20175	1732.5	23.09	24.00	1.233	-0.02	0.366	0.451
	LTE Band 4	20M	QPSK	50RB	0 offset	Right Side	10	20175	1732.5	21.68	23.00	1.355	-0.14	0.264	0.358
	LTE Band 4	20M	QPSK	1RB	0 offset	Bottom Side	10	20175	1732.5	23.09	24.00	1.233	0.12	0.595	0.734
	LTE Band 4	20M	QPSK	50RB	0 offset	Bottom Side	10	20175	1732.5	21.68	23.00	1.355	-0.03	0.456	0.618
	LTE Band 2	20M	QPSK	1RB	0 offset	Front	10	19100	1900	23.27	23.50	1.054	0	0.357	0.376
	LTE Band 2	20M	QPSK	50RB	0 offset	Front	10	18900	1880	21.73	22.50	1.194	-0.03	0.255	0.304
	LTE Band 2	20M	QPSK	1RB	0 offset	Back	10	19100	1900	23.27	23.50	1.054	-0.02	0.694	0.732
#27	LTE Band 2	20M	QPSK	1RB	0 offset	Back	10	18700	1860	23.21	23.50	1.069	0	0.830	**0.887**
	LTE Band 2	20M	QPSK	1RB	0 offset	Back	10	18900	1880	23.11	23.50	1.094	-0.01	0.807	0.883
	LTE Band 2	20M	QPSK	50RB	0 offset	Back	10	18900	1880	21.73	22.50	1.194	-0.01	0.487	0.581
	LTE Band 2	20M	QPSK	100RB	0 offset	Back	10	19100	1900	21.59	22.50	1.233	0.03	0.529	0.652
	LTE Band 2	20M	QPSK	1RB	0 offset	Left Side	10	19100	1900	23.27	23.50	1.054	-0.07	0.093	0.098
	LTE Band 2	20M	QPSK	50RB	0 offset	Left Side	10	18900	1880	21.73	22.50	1.194	-0.08	0.082	0.098
	LTE Band 2	20M	QPSK	1RB	0 offset	Right Side	10	19100	1900	23.27	23.50	1.054	-0.06	0.184	0.194
	LTE Band 2	20M	QPSK	50RB	0 offset	Right Side	10	18900	1880	21.73	22.50	1.194	-0.04	0.159	0.190
	LTE Band 2	20M	QPSK	1RB	0 offset	Bottom Side	10	19100	1900	23.27	23.50	1.054	-0.12	0.781	0.823
	LTE Band 2	20M	QPSK	1RB	0 offset	Bottom Side	10	18700	1860	23.21	23.50	1.069	0	0.788	0.842
	LTE Band 2	20M	QPSK	1RB	0 offset	Bottom Side	10	18900	1880	23.11	23.50	1.094	-0.02	0.793	0.868
	LTE Band 2	20M	QPSK	50RB	0 offset	Bottom Side	10	18900	1880	21.73	22.50	1.194	-0.06	0.571	0.682
	LTE Band 2	20M	QPSK	100RB	0 offset	Bottom Side	10	19100	1900	21.59	22.50	1.233	-0.11	0.569	0.702
#28	LTE Band 30	10M	QPSK	1RB	0 offset	Front	10	27710	2310	20.92	22.00	1.282	0	0.261	**0.335**
	LTE Band 30	10M	QPSK	25RB	0 offset	Front	10	27710	2310	19.82	21.00	1.312	-0.09	0.200	0.262
	LTE Band 30	10M	QPSK	1RB	0 offset	Back	10	27710	2310	20.92	22.00	1.282	0.04	0.218	0.280
	LTE Band 30	10M	QPSK	25RB	0 offset	Back	10	27710	2310	19.82	21.00	1.312	-0.01	0.169	0.222
	LTE Band 30	10M	QPSK	1RB	0 offset	Left Side	10	27710	2310	20.92	22.00	1.282	-0.02	0.060	0.077
	LTE Band 30	10M	QPSK	25RB	0 offset	Left Side	10	27710	2310	19.82	21.00	1.312	-0.06	0.047	0.062
	LTE Band 30	10M	QPSK	1RB	0 offset	Right Side	10	27710	2310	20.92	22.00	1.282	-0.03	0.093	0.119
	LTE Band 30	10M	QPSK	25RB	0 offset	Right Side	10	27710	2310	19.82	21.00	1.312	-0.08	0.019	0.025
	LTE Band 30	10M	QPSK	1RB	0 offset	Bottom Side	10	27710	2310	20.92	22.00	1.282	-0.05	0.160	0.205
	LTE Band 30	10M	QPSK	25RB	0 offset	Bottom Side	10	27710	2310	19.82	21.00	1.312	0	0.130	0.171
	LTE Band 7	20M	QPSK	1RB	0 offset	Front	10	20850	2510	23.39	24.00	1.151	-0.19	0.250	0.288
	LTE Band 7	20M	QPSK	50RB	0 offset	Front	10	20850	2510	22.65	23.00	1.084	-0.03	0.162	0.176
	LTE Band 7	20M	QPSK	1RB	0 offset	Back	10	20850	2510	23.39	24.00	1.151	-0.07	0.301	0.346
	LTE Band 7	20M	QPSK	1RB	0 offset	Back	10	21100	2535	23.08	24.00	1.236	-0.07	0.308	0.381
	LTE Band 7	20M	QPSK	1RB	0 offset	Back	10	21350	2560	22.98	24.00	1.265	-0.07	0.315	0.398
	LTE Band 7	20M	QPSK	50RB	0 offset	Back	10	20850	2510	22.65	23.00	1.084	0	0.197	0.214
	LTE Band 7	20M	QPSK	1RB	0 offset	Left Side	10	20850	2510	23.39	24.00	1.151	-0.09	0.116	0.133
	LTE Band 7	20M	QPSK	50RB	0 offset	Left Side	10	20850	2510	22.65	23.00	1.084	0	0.093	0.101
	LTE Band 7	20M	QPSK	1RB	0 offset	Right Side	10	20850	2510	23.39	24.00	1.151	0	0.062	0.071
	LTE Band 7	20M	QPSK	50RB	0 offset	Right Side	10	20850	2510	22.65	23.00	1.084	-0.03	0.040	0.043
	LTE Band 7	20M	QPSK	1RB	0 offset	Bottom Side	10	20850	2510	23.39	24.00	1.151	-0.05	0.319	0.367
#29	LTE Band 7	20M	QPSK	1RB	0 offset	Bottom Side	10	21100	2535	23.08	24.00	1.236	-0.03	0.349	**0.431**
	LTE Band 7	20M	QPSK	1RB	0 offset	Bottom Side	10	21350	2560	22.98	24.00	1.265	-0.1	0.165	0.209
	LTE Band 7	20M	QPSK	50RB	0 offset	Bottom Side	10	20850	2510	22.65	23.00	1.084	-0.01	0.214	0.232

<WLAN2.4GHz SAR>

Plot No.	Band	Mode	Test Position	Gap (mm)	Ch.	Freq. (MHz)	Average Power (dBm)	Tune-Up Limit (dBm)	Tune-up Scaling Factor	Duty Cycle %	Duty Cycle Scaling Factor	Power Drift (dB)	Area Scan Max. SAR (W/kg)	Measured 1g SAR (W/kg)	Reported 1g SAR (W/kg)
	WLAN 2.4GHz	802.11b_1Mbps	Front	10	11	2462	13.95	14.50	1.135	99.04	1.010		0.175		
#30	WLAN 2.4GHz	802.11b_1Mbps	Back	10	11	2462	13.95	14.50	1.135	99.04	1.010	0.02	0.186	0.135	**0.155**
	WLAN 2.4GHz	802.11b_1Mbps	Left Side	10	11	2462	13.95	14.50	1.135	99.04	1.010		0.139		
	WLAN 2.4GHz	802.11b_1Mbps	Top Side	10	11	2462	13.95	14.50	1.135	99.04	1.010		0.112		
	WLAN 2.4GHz	802.11b_1Mbps	Back	10	1	2412	13.44	14.50	1.276	99.04	1.010	0.02	0.115	0.074	0.095
	WLAN 2.4GHz	802.11b_1Mbps	Back	10	6	2437	12.95	14.50	1.429	99.04	1.010	0.04	0.144	0.096	0.139

15.3 Body Worn Accessory SAR

<GSM SAR>

Plot No.	Band	Mode	Test Position	Gap (mm)	Ch.	Freq. (MHz)	Average Power (dBm)	Tune-Up Limit (dBm)	Tune-up Scaling Factor	Power Drift (dB)	Measured 1g SAR (W/kg)	Reported 1g SAR (W/kg)
	GSM850	GPRS (2 Tx slots)	Front	10	251	848.8	32.56	33.00	1.107	-0.02	0.318	0.352
	GSM850	GPRS (2 Tx slots)	Back	10	251	848.8	32.56	33.00	1.107	0.02	1.010	1.118
	GSM850	GPRS (2 Tx slots)	Back	10	128	824.2	32.40	33.00	1.148	0.04	1.030	1.183
#17	GSM850	GPRS (2 Tx slots)	Back	10	189	836.4	32.49	33.00	1.125	0.07	1.060	**1.192**
	GSM1900	GPRS (2 Tx slots)	Front	10	810	1909.8	29.85	30.00	1.035	-0.1	0.349	0.361
#31	GSM1900	GPRS (2 Tx slots)	Back	10	810	1909.8	29.85	30.00	1.035	0.05	0.672	**0.696**
	GSM1900	GPRS (2 Tx slots)	Back	10	512	1850.2	29.31	30.00	1.172	-0.01	0.521	0.611
	GSM1900	GPRS (2 Tx slots)	Back	10	661	1880	29.78	30.00	1.052	-0.02	0.544	0.572

<WCDMA SAR>

Plot No.	Band	Mode	Test Position	Gap (mm)	Ch.	Freq. (MHz)	Average Power (dBm)	Tune-Up Limit (dBm)	Tune-up Scaling Factor	Power Drift (dB)	Measured 1g SAR (W/kg)	Reported 1g SAR (W/kg)
	WCDMA Band V	RMC12.2Kbps	Front	10	4132	826.4	23.99	24.00	1.002	0	0.189	0.189
	WCDMA Band V	RMC12.2Kbps	Back	10	4132	826.4	23.99	24.00	1.002	0.11	0.544	0.545
	WCDMA Band V	RMC12.2Kbps	Back	10	4182	836.4	23.88	24.00	1.028	0.13	0.589	0.606
#19	WCDMA Band V	RMC12.2Kbps	Back	10	4233	846.6	23.98	24.00	1.005	0.14	0.628	**0.631**
	WCDMA Band IV	RMC12.2Kbps	Front	10	1312	1712.4	23.47	24.00	1.130	0.13	0.549	0.620
	WCDMA Band IV	RMC12.2Kbps	Back	10	1312	1712.4	23.47	24.00	1.130	-0.02	0.772	0.872
	WCDMA Band IV	RMC12.2Kbps	Back	10	1413	1732.6	23.43	24.00	1.140	-0.01	0.918	1.047
#20	WCDMA Band IV	RMC12.2Kbps	Back	10	1513	1752.6	23.45	24.00	1.135	0	1.000	**1.135**
	WCDMA Band II	RMC12.2Kbps	Front	10	9400	1880	23.58	24.00	1.102	0.02	0.449	0.495
	WCDMA Band II	RMC12.2Kbps	Back	10	9400	1880	23.58	24.00	1.102	0.05	0.780	0.859
#32	WCDMA Band II	RMC12.2Kbps	Back	10	9262	1852.4	23.57	24.00	1.104	0.17	0.797	**0.880**
	WCDMA Band II	RMC12.2Kbps	Back	10	9538	1907.6	23.50	24.00	1.122	0	0.776	0.871

<LTE SAR>

Plot No.	Band	BW (MHz)	Modulation	RB Size	RB offset	Test Position	Gap (mm)	Ch.	Freq. (MHz)	Average Power (dBm)	Tune-Up Limit (dBm)	Tune-up Scaling Factor	Power Drift (dB)	Measured 1g SAR (W/kg)	Reported 1g SAR (W/kg)
	LTE Band 12	10M	QPSK	1RB	0 offset	Front	10	23095	707.5	23.85	24.50	1.161	-0.04	0.175	0.203
	LTE Band 12	10M	QPSK	25RB	12 offset	Front	10	23095	707.5	22.71	23.50	1.199	0.01	0.153	0.184
#33	LTE Band 12	10M	QPSK	1RB	0 offset	Back	10	23095	707.5	23.85	24.50	1.161	-0.13	0.317	**0.368**
	LTE Band 12	10M	QPSK	25RB	12 offset	Back	10	23095	707.5	22.71	23.50	1.199	-0.14	0.276	0.331
	LTE Band 17	10M	QPSK	1RB	0 offset	Front	10	23790	710	23.69	24.50	1.205	0.19	0.188	0.227
	LTE Band 17	10M	QPSK	25RB	12 offset	Front	10	23800	711	22.66	23.50	1.213	0.14	0.151	0.183
#34	LTE Band 17	10M	QPSK	1RB	0 offset	Back	10	23790	710	23.69	24.50	1.205	-0.08	0.349	**0.421**
	LTE Band 17	10M	QPSK	25RB	12 offset	Back	10	23800	711	22.66	23.50	1.213	-0.07	0.281	0.341
	LTE Band 13	10M	QPSK	1RB	0 offset	Front	10	23230	782	22.96	24.50	1.426	-0.04	0.173	0.247
	LTE Band 13	10M	QPSK	25RB	0 offset	Front	10	23230	782	21.85	23.50	1.462	-0.01	0.136	0.199
#24	LTE Band 13	10M	QPSK	1RB	0 offset	Back	10	23230	782	22.96	24.50	1.426	0.06	0.361	**0.515**
	LTE Band 13	10M	QPSK	25RB	0 offset	Back	10	23230	782	21.85	23.50	1.462	-0.01	0.282	0.412
	LTE Band 5	10M	QPSK	1RB	0 offset	Front	10	20525	836.5	23.74	24.50	1.191	0	0.210	0.250
	LTE Band 5	10M	QPSK	25RB	0 offset	Front	10	20525	836.5	22.70	23.50	1.202	0.01	0.166	0.200
	LTE Band 5	10M	QPSK	1RB	0 offset	Back	10	20525	836.5	23.74	24.50	1.191	0.06	0.538	0.641
	LTE Band 5	10M	QPSK	1RB	0 offset	Back	10	20450	829	23.71	24.50	1.199	-0.04	0.488	0.585
#25	LTE Band 5	10M	QPSK	1RB	0 offset	Back	10	20600	844	23.69	24.50	1.205	0.05	0.566	**0.682**
	LTE Band 5	10M	QPSK	25RB	0 offset	Back	10	20525	836.5	22.70	23.50	1.202	0.05	0.427	0.513
	LTE Band 4	20M	QPSK	1RB	0 offset	Front	10	20175	1732.5	23.09	24.00	1.233	0.1	0.563	0.694
	LTE Band 4	20M	QPSK	50RB	0 offset	Front	10	20175	1732.5	21.68	23.00	1.355	0.09	0.417	0.565
	LTE Band 4	20M	QPSK	1RB	0 offset	Back	10	20175	1732.5	23.09	24.00	1.233	0.05	0.796	0.982
	LTE Band 4	20M	QPSK	1RB	0 offset	Back	10	20050	1720	23.01	24.00	1.256	-0.06	0.744	0.934
#26	LTE Band 4	20M	QPSK	1RB	0 offset	Back	10	20300	1745	23.08	24.00	1.236	0.1	0.896	**1.107**
	LTE Band 4	20M	QPSK	50RB	0 offset	Back	10	20175	1732.5	21.68	23.00	1.355	-0.01	0.624	0.846
	LTE Band 4	20M	QPSK	50RB	0 offset	Back	10	20050	1720	21.61	23.00	1.377	0.01	0.554	0.763
	LTE Band 4	20M	QPSK	50RB	0 offset	Back	10	20300	1745	21.67	23.00	1.358	-0.1	0.661	0.898
	LTE Band 4	20M	QPSK	100RB	0 offset	Back	10	20175	1732.5	21.46	23.00	1.426	0.04	0.603	0.860
	LTE Band 2	20M	QPSK	1RB	0 offset	Front	10	19100	1900	23.27	23.50	1.054	0	0.357	0.376
	LTE Band 2	20M	QPSK	50RB	0 offset	Front	10	18900	1880	21.73	22.50	1.194	-0.03	0.255	0.304
	LTE Band 2	20M	QPSK	1RB	0 offset	Back	10	19100	1900	23.27	23.50	1.054	-0.02	0.694	0.732
#27	LTE Band 2	20M	QPSK	1RB	0 offset	Back	10	18700	1860	23.21	23.50	1.069	0	0.830	**0.887**
	LTE Band 2	20M	QPSK	1RB	0 offset	Back	10	18900	1880	23.11	23.50	1.094	-0.01	0.807	0.883
	LTE Band 2	20M	QPSK	50RB	0 offset	Back	10	18900	1880	21.73	22.50	1.194	-0.01	0.487	0.581
	LTE Band 2	20M	QPSK	100RB	0 offset	Back	10	19100	1900	21.59	22.50	1.233	0.03	0.529	0.652
#28	LTE Band 30	10M	QPSK	1RB	0 offset	Front	10	27710	2310	20.92	22.00	1.282	0	0.261	**0.335**
	LTE Band 30	10M	QPSK	25RB	0 offset	Front	10	27710	2310	19.82	21.00	1.312	-0.09	0.200	0.262
	LTE Band 30	10M	QPSK	1RB	0 offset	Back	10	27710	2310	20.92	22.00	1.282	0.04	0.218	0.280
	LTE Band 30	10M	QPSK	25RB	0 offset	Back	10	27710	2310	19.82	21.00	1.312	-0.01	0.169	0.222
	LTE Band 7	20M	QPSK	1RB	0 offset	Front	10	20850	2510	23.39	24.00	1.151	-0.19	0.250	0.288
	LTE Band 7	20M	QPSK	50RB	0 offset	Front	10	20850	2510	22.65	23.00	1.084	-0.03	0.162	0.176
	LTE Band 7	20M	QPSK	1RB	0 offset	Back	10	20850	2510	23.39	24.00	1.151	-0.07	0.301	0.346
	LTE Band 7	20M	QPSK	1RB	0 offset	Back	10	21100	2535	23.08	24.00	1.236	-0.07	0.308	0.381
#35	LTE Band 7	20M	QPSK	1RB	0 offset	Back	10	21350	2560	22.98	24.00	1.265	-0.07	0.315	**0.398**
	LTE Band 7	20M	QPSK	50RB	0 offset	Back	10	20850	2510	22.65	23.00	1.084	0	0.197	0.214

<WLAN2.4GHz SAR>

Plot No.	Band	Mode	Test Position	Gap (mm)	Ch.	Freq. (MHz)	Average Power (dBm)	Tune-Up Limit (dBm)	Tune-up Scaling Factor	Duty Cycle %	Duty Cycle Scaling Factor	Power Drift (dB)	Area Scan Max. SAR (W/kg)	Measured 1g SAR (W/kg)	Reported 1g SAR (W/kg)
	WLAN 2.4GHz	802.11b_1Mbps	Front	10	11	2462	13.95	14.50	1.135	99.04	1.010		0.175		
#30	WLAN 2.4GHz	802.11b_1Mbps	Back	10	11	2462	13.95	14.50	1.135	99.04	1.010	0.02	0.186	0.135	**0.155**
	WLAN 2.4GHz	802.11b_1Mbps	Back	10	1	2412	13.44	14.50	1.276	99.04	1.010	0.02	0.115	0.074	0.095
	WLAN 2.4GHz	802.11b_1Mbps	Back	10	6	2437	12.95	14.50	1.429	99.04	1.010	0.04	0.144	0.096	0.139

<WLAN5GHz SAR>

Plot No.	Band	Mode	Test Position	Gap (mm)	Ch.	Freq. (MHz)	Average Power (dBm)	Tune-Up Limit (dBm)	Tune-up Scaling Factor	Duty Cycle %	Duty Cycle Scaling Factor	Power Drift (dB)	Area Scan Max. SAR (W/kg)	Measured 1g SAR (W/kg)	Reported 1g SAR (W/kg)
#36	WLAN 5.2GHz	802.11a_6Mbps	Front	10	44	5220	12.63	13.00	1.089	94.47	1.059	0.10	0.342	0.178	0.205
	WLAN 5.2GHz	802.11a_6Mbps	Back	10	44	5220	12.63	13.00	1.089	94.47	1.059		0.330		
	WLAN 5.2GHz	802.11a_6Mbps	Front	10	36	5180	12.42	13.00	1.143	94.47	1.059	0.11	0.263	0.105	0.127
	WLAN 5.2GHz	802.11a_6Mbps	Front	10	48	5240	12.56	13.00	1.107	94.47	1.059	0.12	0.333	0.145	0.170
#37	WLAN 5.8GHz	802.11a_6Mbps	Front	10	149	5745	10.20	10.50	1.072	94.47	1.059	-0.09	0.726	0.357	**0.405**
	WLAN 5.8GHz	802.11a_6Mbps	Back	10	149	5745	10.20	10.50	1.072	94.47	1.059	-0.06	0.640	0.307	0.348
	WLAN 5.8GHz	802.11a_6Mbps	Front	10	157	5785	9.99	10.50	1.125	94.47	1.059	0.01	0.343	0.165	0.197
	WLAN 5.8GHz	802.11a_6Mbps	Front	10	165	5825	9.50	10.50	1.259	94.47	1.059	0.02	0.310	0.146	0.195

15.4 Repeated SAR Measurement

No.	Band	Mode	Test Position	Gap (mm)	Ch.	Freq. (MHz)	Average Power (dBm)	Tune-Up Limit (dBm)	Tune-up Scaling Factor	Duty Cycle %	Duty Cycle Scaling Factor	Power Drift (dB)	Area Scan Max. SAR (W/kg)	Measured 1g SAR (W/kg)	Ratio	Reported 1g SAR (W/kg)
1st	GSM850	GPRS (2 Tx slots)	Back	10	189	836.4	32.49	33.00	1.125	-	-	0.07	-	1.060	1	1.192
2nd	GSM850	GPRS (2 Tx slots)	Back	10	189	836.4	32.49	33.00	1.125	-	-	0.04	-	1.040	1.019	1.170
1st	WCDMA Band IV	RMC12.2Kbps	Back	10	1513	1752.6	23.45	24.00	1.135	-	-	0	-	1.000	1	1.135
2nd	WCDMA Band IV	RMC12.2Kbps	Back	10	1513	1752.6	23.45	24.00	1.135	-	-	0.01	-	0.999	1.001	1.134
1st	WCDMA Band II	RMC12.2Kbps	Bottom Side	10	9400	1880	23.58	24.00	1.102	-	-	-0.06	-	0.854	1	0.941
2nd	WCDMA Band II	RMC12.2Kbps	Bottom Side	10	9400	1880	23.58	24.00	1.102	-	-	-0.14	-	0.803	1.064	0.885
1st	WLAN5.2GHz	802.11a_6Mbps	Right Cheek	-	48	5240	12.56	13.00	1.107	94.47	1.059	0.16	2.384	0.919	1	1.077
2nd	WLAN5.2GHz	802.11a_6Mbps	Right Cheek	-	48	5240	12.56	13.00	1.107	94.47	1.059	0.13	1.924	0.905	1.015	1.061
1st	WLAN5.8GHz	802.11a_6Mbps	Right Cheek	-	149	5745	10.20	10.50	1.072	94.47	1.059	0.09	2.778	0.979	1	1.111
2nd	WLAN5.8GHz	802.11a_6Mbps	Right Cheek	-	149	5745	10.20	10.50	1.072	94.47	1.059	0.06	2.766	0.975	1.004	1.106

General Note:

1. Per KDB 865664 D01v01r03, for each frequency band, repeated SAR measurement is required only when the measured SAR is ≥0.8W/kg.
2. Per KDB 865664 D01v01r03, if the ratio among the repeated measurement is ≤ 1.2 and the measured SAR <1.45W/kg, only one repeated measurement is required.
3. The ratio is the difference in percentage between original and repeated *measured SAR*.
4. All measurement SAR result is scaled-up to account for tune-up tolerance and is compliant.

16. Simultaneous Transmission Analysis

No.	Simultaneous Transmission Configurations	Portable Handset			Note
		Head	Body-worn	Hotspot	
1.	GSM(Voice) + WLAN2.4GHz(data)	Yes	Yes		
2.	WCDMA(Voice) + WLAN2.4GHz(data)	Yes	Yes		
3.	LTE(Voice) + WLAN2.4GHz(data)	Yes	Yes		
4.	GSM(Voice) + Bluetooth(data)	Yes	Yes		
5.	WCDMA((Voice) + Bluetooth(data)	Yes	Yes		
6.	LTE((Voice) + Bluetooth(data)	Yes	Yes		
7.	GSM(Voice) + WLAN5GHz(data)	Yes	Yes		
8.	WCDMA((Voice) + WLAN5GHz(data)	Yes	Yes		
9.	LTE((Voice) + WLAN5GHz(data)	Yes	Yes		
10.	GPRS/EDGE(Data) + WLAN2.4GHz(data)	Yes	Yes	Yes	2.4GHz Hotspot
11.	WCDMA(Data) + WLAN2.4GHz(data)	Yes	Yes	Yes	2.4GHz Hotspot
12.	LTE(Data) + WLAN2.4GHz(data)	Yes	Yes	Yes	2.4GHz Hotspot
13.	GPRS/EDGE(Data) + Bluetooth(data)	Yes	Yes	Yes	Bluetooth Tethering
14.	WCDMA(Data) + Bluetooth(data)	Yes	Yes	Yes	Bluetooth Tethering
15.	LTE(Data) + Bluetooth(data)	Yes	Yes	Yes	Bluetooth Tethering
16.	GPRS/EDGE(data) + WLAN5GHz(data)	Yes	Yes	Yes	WiFi Direct
17.	WCDMA(data) + WLAN5GHz(data)	Yes	Yes	Yes	WiFi Direct
18.	LTE(data) + WLAN5GHz(data)	Yes	Yes	Yes	WiFi Direct

General Note:

1. This device supported VoIP in GPRS, EGPRS, WCDMA, LTE (e.g. 3rd party VoIP).
2. This device 2.4GHz WLAN supports Hotspot operation and 5.2GHz / 5.8GHz supports WiFi Direct (Group Client only).
3. WLAN and Bluetooth share the same antenna, and cannot transmit simultaneously.
4. EUT will choose either WLAN 2.4GHz or WLAN 5GHz according to the network signal condition; therefore, 2.4GHz WLAN and 5GHz WLAN will not operate simultaneously at any moment.
5. For conservative evaluated for co-located WLAN and WWAN, WLAN(2.4GHz/5GHz) are selected the maximum SAR for co-located with WWAN.
6. The Reported SAR summation is calculated based on the same configuration and test position.
7. Per KDB 447498 D01v05r02, simultaneous transmission SAR is compliant if,
   i) Scalar SAR summation < 1.6W/kg.
   ii) SPLSR = $(SAR_1 + SAR_2)^{1.5}$ / (*min. separation distance, mm*), and the peak separation distance is determined from the square root of $[(x_1-x_2)^2 + (y_1-y_2)^2 + (z_1-z_2)^2]$, where (x_1, y_1, z_1) and (x_2, y_2, z_2) are the coordinates of the extrapolated peak SAR locations in the zoom scan.
   iii) If SPLSR ≤ 0.04, simultaneously transmission SAR measurement is not necessary.
   iv) Simultaneously transmission SAR measurement, and the reported multi-band SAR < 1.6W/kg.
8. For simultaneous transmission analysis, Bluetooth SAR is estimated per KDB 447498 D01v05r02 based on the formula below.
   i) (*max. power of channel, including tune-up tolerance, mW*)/(*min. test separation distance, mm*)]·[$\sqrt{f(GHz)}/x$] W/kg for *test separation distances* ≤ 50 mm; where x = 7.5 for 1-g SAR, and x = 18.75 for 10-g SAR.
   ii) When the minimum separation distance is < 5mm, the distance is used 5mm to determine SAR test exclusion.
   iii) 0.4 W/kg for 1-g SAR and 1.0 W/kg for 10-g SAR, when the *test separation distances* is > 50 mm.

Bluetooth Max Power (dBm)	Exposure Position	Head	Hotspot	Body worn
	Test separation	0 mm	10 mm	10 mm
2.50	Estimated SAR (W/kg)	0.084	0.042	0.042

16.1 Head Exposure Conditions

<WWAN + WLAN 2.4GHz>

WWAN Band		Exposure Position	WWAN SAR (W/kg)	WLAN 2.4GHz SAR (W/kg)	Summed SAR (W/kg)	SPLSR	Case No
GSM	GSM850	Right Cheek	0.429	0.857	1.29		
		Right Tilted	0.187	0.479	0.67		
		Left Cheek	0.299	0.857	1.16		
		Left Tilted	0.165	0.857	1.02		
	GSM1900	Right Cheek	0.098	0.857	0.96		
		Right Tilted	0.004	0.479	0.48		
		Left Cheek	0.060	0.857	0.92		
		Left Tilted	0.046	0.857	0.90		
WCDMA	Band V	Right Cheek	0.245	0.857	1.10		
		Right Tilted	0.107	0.479	0.59		
		Left Cheek	0.174	0.857	1.03		
		Left Tilted	0.101	0.857	0.96		
	Band IV	Right Cheek	0.348	0.857	1.21		
		Right Tilted	0.143	0.479	0.62		
		Left Cheek	0.220	0.857	1.08		
		Left Tilted	0.190	0.857	1.05		
	Band II	Right Cheek	0.183	0.857	1.04		
		Right Tilted	0.010	0.479	0.49		
		Left Cheek	0.096	0.857	0.95		
		Left Tilted	0.072	0.857	0.93		

WWAN Band		Exposure Position	WWAN SAR (W/kg)	WLAN 2.4GHz SAR (W/kg)	Summed SAR (W/kg)	SPLSR	Case No
LTE	Band 12	Right Cheek	0.166	0.857	1.02		
		Right Tilted	0.030	0.479	0.51		
		Left Cheek	0.131	0.857	0.99		
		Left Tilted	0.053	0.857	0.91		
	Band 17	Right Cheek	0.190	0.857	1.05		
		Right Tilted	0.036	0.479	0.52		
		Left Cheek	0.147	0.857	1.00		
		Left Tilted	0.061	0.857	0.92		
	Band 13	Right Cheek	0.202	0.857	1.06		
		Right Tilted	0.111	0.479	0.59		
		Left Cheek	0.153	0.857	1.01		
		Left Tilted	0.077	0.857	0.93		
	Band 5	Right Cheek	0.269	0.857	1.13		
		Right Tilted	0.137	0.479	0.62		
		Left Cheek	0.194	0.857	1.05		
		Left Tilted	0.111	0.857	0.97		
	Band 4	Right Cheek	0.351	0.857	1.21		
		Right Tilted	0.105	0.479	0.58		
		Left Cheek	0.181	0.857	1.04		
		Left Tilted	0.131	0.857	0.99		
	Band 2	Right Cheek	0.162	0.857	1.02		
		Right Tilted	0.064	0.479	0.54		
		Left Cheek	0.106	0.857	0.96		
		Left Tilted	0.079	0.857	0.94		
	Band 30	Right Cheek	0.092	0.857	0.95		
		Right Tilted	0.040	0.479	0.52		
		Left Cheek	0.132	0.857	0.99		
		Left Tilted	0.033	0.857	0.89		
	Band 7	Right Cheek	0.085	0.857	0.94		
		Right Tilted	0.041	0.479	0.52		
		Left Cheek	0.126	0.857	0.98		
		Left Tilted	0.040	0.857	0.90		

<WWAN + WLAN 5GHz>

WWAN Band		Exposure Position	WWAN SAR (W/kg)	WLAN 5GHz SAR (W/kg)	Summed SAR (W/kg)	SPLSR	Case No
GSM	GSM850	Right Cheek	0.429	1.144	**1.57**		
		Right Tilted	0.187	0.924	1.11		
		Left Cheek	0.299	0.922	1.22		
		Left Tilted	0.165	0.794	0.96		
	GSM1900	Right Cheek	0.098	1.144	1.24		
		Right Tilted	0.004	0.924	0.93		
		Left Cheek	0.060	0.922	0.98		
		Left Tilted	0.046	0.794	0.84		
WCDMA	Band V	Right Cheek	0.245	1.144	1.39		
		Right Tilted	0.107	0.924	1.03		
		Left Cheek	0.174	0.922	1.10		
		Left Tilted	0.101	0.794	0.90		
	Band IV	Right Cheek	0.348	1.144	1.49		
		Right Tilted	0.143	0.924	1.07		
		Left Cheek	0.220	0.922	1.14		
		Left Tilted	0.190	0.794	0.98		
	Band II	Right Cheek	0.183	1.144	1.33		
		Right Tilted	0.010	0.924	0.93		
		Left Cheek	0.096	0.922	1.02		
		Left Tilted	0.072	0.794	0.87		

WWAN Band		Exposure Position	WWAN SAR (W/kg)	WLAN 5GHz SAR (W/kg)	Summed SAR (W/kg)	SPLSR	Case No
LTE	Band 12	Right Cheek	0.166	1.144	1.31		
		Right Tilted	0.030	0.924	0.95		
		Left Cheek	0.131	0.922	1.05		
		Left Tilted	0.053	0.794	0.85		
	Band 17	Right Cheek	0.190	1.144	1.33		
		Right Tilted	0.036	0.924	0.96		
		Left Cheek	0.147	0.922	1.07		
		Left Tilted	0.061	0.794	0.86		
	Band 13	Right Cheek	0.202	1.144	1.35		
		Right Tilted	0.111	0.924	1.04		
		Left Cheek	0.153	0.922	1.08		
		Left Tilted	0.077	0.794	0.87		
	Band 5	Right Cheek	0.269	1.144	1.41		
		Right Tilted	0.137	0.924	1.06		
		Left Cheek	0.194	0.922	1.12		
		Left Tilted	0.111	0.794	0.91		
	Band 4	Right Cheek	0.351	1.144	1.50		
		Right Tilted	0.105	0.924	1.03		
		Left Cheek	0.181	0.922	1.10		
		Left Tilted	0.131	0.794	0.93		
	Band 2	Right Cheek	0.162	1.144	1.31		
		Right Tilted	0.064	0.924	0.99		
		Left Cheek	0.106	0.922	1.03		
		Left Tilted	0.079	0.794	0.87		
	Band 30	Right Cheek	0.092	1.144	1.24		
		Right Tilted	0.040	0.924	0.96		
		Left Cheek	0.132	0.922	1.05		
		Left Tilted	0.033	0.794	0.83		
	Band 7	Right Cheek	0.085	1.144	1.23		
		Right Tilted	0.041	0.924	0.97		
		Left Cheek	0.126	0.922	1.05		
		Left Tilted	0.040	0.794	0.83		

<WWAN + Bluetooth>

WWAN Band		Exposure Position	WWAN SAR (W/kg)	Bluetooth Estimated SAR (W/kg)	Summed SAR (W/kg)	SPLSR	Case No
GSM	GSM850	Right Cheek	0.429	0.084	0.51		
		Right Tilted	0.187	0.084	0.27		
		Left Cheek	0.299	0.084	0.38		
		Left Tilted	0.165	0.084	0.25		
	GSM1900	Right Cheek	0.098	0.084	0.18		
		Right Tilted	0.004	0.084	0.09		
		Left Cheek	0.060	0.084	0.14		
		Left Tilted	0.046	0.084	0.13		
WCDMA	Band V	Right Cheek	0.245	0.084	0.33		
		Right Tilted	0.107	0.084	0.19		
		Left Cheek	0.174	0.084	0.26		
		Left Tilted	0.101	0.084	0.19		
	Band IV	Right Cheek	0.348	0.084	0.43		
		Right Tilted	0.143	0.084	0.23		
		Left Cheek	0.220	0.084	0.30		
		Left Tilted	0.190	0.084	0.27		
	Band II	Right Cheek	0.183	0.084	0.27		
		Right Tilted	0.010	0.084	0.09		
		Left Cheek	0.096	0.084	0.18		
		Left Tilted	0.072	0.084	0.16		

WWAN Band		Exposure Position	WWAN SAR (W/kg)	Bluetooth Estimated SAR (W/kg)	Summed SAR (W/kg)	SPLSR	Case No
LTE	Band 12	Right Cheek	0.166	0.084	0.25		
		Right Tilted	0.030	0.084	0.11		
		Left Cheek	0.131	0.084	0.22		
		Left Tilted	0.053	0.084	0.14		
	Band 17	Right Cheek	0.190	0.084	0.27		
		Right Tilted	0.036	0.084	0.12		
		Left Cheek	0.147	0.084	0.23		
		Left Tilted	0.061	0.084	0.15		
	Band 13	Right Cheek	0.202	0.084	0.29		
		Right Tilted	0.111	0.084	0.20		
		Left Cheek	0.153	0.084	0.24		
		Left Tilted	0.077	0.084	0.16		
	Band 5	Right Cheek	0.269	0.084	0.35		
		Right Tilted	0.137	0.084	0.22		
		Left Cheek	0.194	0.084	0.28		
		Left Tilted	0.111	0.084	0.20		
	Band 4	Right Cheek	0.351	0.084	0.44		
		Right Tilted	0.105	0.084	0.19		
		Left Cheek	0.181	0.084	0.27		
		Left Tilted	0.131	0.084	0.22		
	Band 2	Right Cheek	0.162	0.084	0.25		
		Right Tilted	0.064	0.084	0.15		
		Left Cheek	0.106	0.084	0.19		
		Left Tilted	0.079	0.084	0.16		
	Band 30	Right Cheek	0.092	0.084	0.18		
		Right Tilted	0.040	0.084	0.12		
		Left Cheek	0.132	0.084	0.22		
		Left Tilted	0.033	0.084	0.12		
	Band 7	Right Cheek	0.085	0.084	0.17		
		Right Tilted	0.041	0.084	0.13		
		Left Cheek	0.126	0.084	0.21		
		Left Tilted	0.040	0.084	0.12		

16.2 Hotspot Exposure Conditions

<WWAN + WLAN 2.4GHz>

WWAN Band		Exposure Position	WWAN SAR (W/kg)	WLAN 2.4GHz SAR (W/kg)	Summed SAR (W/kg)	SPLSR	Case No
GSM	GSM850	Front	0.352	0.155	0.51		
		Back	1.192	0.155	1.35		
		Left Side	0.349	0.155	0.50		
		Right Side	0.677		0.68		
		Top Side		0.155	0.16		
		Bottom Side	0.333	0.155	0.49		
	GSM1900	Front	0.361	0.155	0.52		
		Back	0.696	0.155	0.85		
		Left Side	0.052	0.155	0.21		
		Right Side	0.087		0.09		
		Top Side		0.155	0.16		
		Bottom Side	0.733	0.155	0.89		
WCDMA	Band V	Front	0.189	0.155	0.34		
		Back	0.631	0.155	0.79		
		Left Side	0.279	0.155	0.43		
		Right Side	0.468		0.47		
		Top Side		0.155	0.16		
		Bottom Side	0.137	0.155	0.29		
	Band IV	Front	0.620	0.155	0.78		
		Back	1.135	0.155	1.29		
		Left Side	0.276	0.155	0.43		
		Right Side	0.306		0.31		
		Top Side		0.155	0.16		
		Bottom Side	0.639	0.155	0.79		
	Band II	Front	0.495	0.155	0.65		
		Back	0.880	0.155	1.04		
		Left Side	0.084	0.155	0.24		
		Right Side	0.127		0.13		
		Top Side		0.155	0.16		
		Bottom Side	0.941	0.155	1.10		

WWAN Band		Exposure Position	WWAN SAR (W/kg)	WLAN 2.4GHz SAR (W/kg)	Summed SAR (W/kg)	SPLSR	Case No
LTE	Band 12	Front	0.203	0.155	0.36		
		Back	0.368	0.155	0.52		
		Left Side	0.237	0.155	0.39		
		Right Side	0.394		0.40		
		Top Side		0.155	0.16		
		Bottom Side	0.085	0.155	0.24		
	Band 17	Front	0.227	0.155	0.38		
		Back	0.421	0.155	0.58		
		Left Side	0.260	0.155	0.42		
		Right Side	0.437		0.44		
		Top Side		0.155	0.16		
		Bottom Side	0.098	0.155	0.25		
	Band 13	Front	0.247	0.155	0.40		
		Back	0.515	0.155	0.67		
		Left Side	0.341	0.155	0.50		
		Right Side	0.508		0.51		
		Top Side		0.155	0.16		
		Bottom Side	0.148	0.155	0.30		
	Band 5	Front	0.250	0.155	0.41		
		Back	0.682	0.155	0.84		
		Left Side	0.169	0.155	0.32		
		Right Side	0.398		0.40		
		Top Side		0.155	0.16		
		Bottom Side	0.187	0.155	0.34		
	Band 4	Front	0.694	0.155	0.85		
		Back	1.107	0.155	1.26		
		Left Side	0.402	0.155	0.56		
		Right Side	0.451		0.45		
		Top Side		0.155	0.16		
		Bottom Side	0.734	0.155	0.89		
	Band 2	Front	0.376	0.155	0.53		
		Back	0.887	0.155	1.04		
		Left Side	0.098	0.155	0.25		
		Right Side	0.194		0.19		
		Top Side		0.155	0.16		
		Bottom Side	0.868	0.155	1.02		
	Band 30	Front	0.335	0.155	0.49		
		Back	0.280	0.155	0.44		
		Left Side	0.077	0.155	0.23		
		Right Side	0.119		0.12		
		Top Side		0.155	0.16		
		Bottom Side	0.205	0.155	0.36		
	Band 7	Front	0.288	0.155	0.44		
		Back	0.398	0.155	0.55		
		Left Side	0.133	0.155	0.29		
		Right Side	0.071		0.07		
		Top Side		0.155	0.16		
		Bottom Side	0.431	0.155	0.59		

<WWAN + Bluetooth>

WWAN Band		Exposure Position	WWAN SAR (W/kg)	Bluetooth Estimated SAR (W/kg)	Summed SAR (W/kg)	SPLSR	Case No
GSM	GSM850	Front	0.352	0.042	0.39		
		Back	1.192	0.042	1.23		
		Left Side	0.349	0.042	0.39		
		Right Side	0.677		0.68		
		Top Side		0.042	0.04		
		Bottom Side	0.333		0.33		
	GSM1900	Front	0.361	0.042	0.40		
		Back	0.696	0.042	0.74		
		Left Side	0.052	0.042	0.09		
		Right Side	0.087		0.09		
		Top Side		0.042	0.04		
		Bottom Side	0.733		0.73		
WCDMA	Band V	Front	0.189	0.042	0.23		
		Back	0.631	0.042	0.67		
		Left Side	0.279	0.042	0.32		
		Right Side	0.468		0.47		
		Top Side		0.042	0.04		
		Bottom Side	0.137		0.14		
	Band IV	Front	0.620	0.042	0.66		
		Back	1.135	0.042	1.18		
		Left Side	0.276	0.042	0.32		
		Right Side	0.306		0.31		
		Top Side		0.042	0.04		
		Bottom Side	0.639		0.64		
	Band II	Front	0.495	0.042	0.54		
		Back	0.880	0.042	0.92		
		Left Side	0.084	0.042	0.13		
		Right Side	0.127		0.13		
		Top Side		0.042	0.04		
		Bottom Side	0.941		0.94		

WWAN Band		Exposure Position	WWAN SAR (W/kg)	Bluetooth Estimated SAR (W/kg)	Summed SAR (W/kg)	SPLSR	Case No
LTE	Band 12	Front	0.203	0.042	0.25		
		Back	0.368	0.042	0.41		
		Left Side	0.237	0.042	0.28		
		Right Side	0.394		0.39		
		Top Side		0.042	0.04		
		Bottom Side	0.085		0.09		
	Band 17	Front	0.227	0.042	0.27		
		Back	0.421	0.042	0.46		
		Left Side	0.260	0.042	0.30		
		Right Side	0.437		0.44		
		Top Side		0.042	0.04		
		Bottom Side	0.098		0.10		
	Band 13	Front	0.247	0.042	0.29		
		Back	0.515	0.042	0.56		
		Left Side	0.341	0.042	0.38		
		Right Side	0.508		0.51		
		Top Side		0.042	0.04		
		Bottom Side	0.148		0.15		
	Band 5	Front	0.250	0.042	0.29		
		Back	0.682	0.042	0.72		
		Left Side	0.169	0.042	0.21		
		Right Side	0.398		0.40		
		Top Side		0.042	0.04		
		Bottom Side	0.187		0.19		
	Band 4	Front	0.694	0.042	0.74		
		Back	1.107	0.042	1.15		
		Left Side	0.402	0.042	0.44		
		Right Side	0.451		0.45		
		Top Side		0.042	0.04		
		Bottom Side	0.734		0.73		
	Band 2	Front	0.376	0.042	0.42		
		Back	0.887	0.042	0.93		
		Left Side	0.098	0.042	0.14		
		Right Side	0.194		0.19		
		Top Side		0.042	0.04		
		Bottom Side	0.868		0.87		
	Band 30	Front	0.335	0.042	0.38		
		Back	0.280	0.042	0.32		
		Left Side	0.077	0.042	0.12		
		Right Side	0.119		0.12		
		Top Side		0.042	0.04		
		Bottom Side	0.205		0.21		
	Band 7	Front	0.288	0.042	0.33		
		Back	0.398	0.042	0.44		
		Left Side	0.133	0.042	0.18		
		Right Side	0.071		0.07		
		Top Side		0.042	0.04		
		Bottom Side	0.431		0.43		

16.3 Body-Worn Accessory Exposure Conditions

<WWAN + WLAN 2.4GHz>

WWAN Band		Exposure Position	WWAN SAR (W/kg)	WLAN 2.4GHz SAR (W/kg)	Summed SAR (W/kg)	SPLSR	Case No
GSM	GSM850	Front	0.352		0.35		
		Back	1.192	0.155	**1.35**		
	GSM1900	Front	0.361		0.36		
		Back	0.696	0.155	0.85		
WCDMA	Band V	Front	0.189		0.19		
		Back	0.631	0.155	0.79		
	Band IV	Front	0.620		0.62		
		Back	1.135	0.155	1.29		
	Band II	Front	0.495		0.50		
		Back	0.880	0.155	1.04		
LTE	Band 12	Front	0.203		0.20		
		Back	0.368	0.155	0.52		
	Band 17	Front	0.227		0.23		
		Back	0.421	0.155	0.58		
	Band 13	Front	0.247		0.25		
		Back	0.515	0.155	0.67		
	Band 5	Front	0.250		0.25		
		Back	0.682	0.155	0.84		
	Band 4	Front	0.694		0.69		
		Back	1.107	0.155	1.26		
	Band 2	Front	0.376		0.38		
		Back	0.887	0.155	1.04		
	Band 30	Front	0.335		0.34		
		Back	0.280	0.155	0.44		
	Band 7	Front	0.288		0.29		
		Back	0.398	0.155	0.55		

<WWAN + WLAN 5GHz>

WWAN Band		Exposure Position	WWAN SAR (W/kg)	WLAN 5GHz SAR (W/kg)	Summed SAR (W/kg)	SPLSR	Case No
GSM	GSM850	Front	0.352	0.405	0.76		
		Back	1.192	0.348	1.54		
	GSM1900	Front	0.361	0.405	0.77		
		Back	0.696	0.348	1.04		
WCDMA	Band V	Front	0.189	0.405	0.59		
		Back	0.631	0.348	0.98		
	Band IV	Front	0.620	0.405	1.03		
		Back	1.135	0.348	1.48		
	Band II	Front	0.495	0.405	0.90		
		Back	0.880	0.348	1.23		
LTE	Band 12	Front	0.203	0.405	0.61		
		Back	0.368	0.348	0.72		
	Band 17	Front	0.227	0.405	0.63		
		Back	0.421	0.348	0.77		
	Band 13	Front	0.247	0.405	0.65		
		Back	0.515	0.348	0.86		
	Band 5	Front	0.250	0.405	0.66		
		Back	0.682	0.348	1.03		
	Band 4	Front	0.694	0.405	1.10		
		Back	1.107	0.348	1.46		
	Band 2	Front	0.376	0.405	0.78		
		Back	0.887	0.348	1.24		
	Band 30	Front	0.335	0.405	0.74		
		Back	0.280	0.348	0.63		
	Band 7	Front	0.288	0.405	0.69		
		Back	0.398	0.348	0.75		

<WWAN + Bluetooth>

WWAN Band		Exposure Position	WWAN SAR (W/kg)	Bluetooth Estimated SAR (W/kg)	Summed SAR (W/kg)	SPLSR	Case No
GSM	GSM850	Front	0.352	0.042	0.39		
		Back	1.192	0.042	1.23		
	GSM1900	Front	0.361	0.042	0.40		
		Back	0.696	0.042	0.74		
WCDMA	Band V	Front	0.189	0.042	0.23		
		Back	0.631	0.042	0.67		
	Band IV	Front	0.620	0.042	0.66		
		Back	1.135	0.042	1.18		
	Band II	Front	0.495	0.042	0.54		
		Back	0.880	0.042	0.92		
LTE	Band 12	Front	0.203	0.042	0.25		
		Back	0.368	0.042	0.41		
	Band 17	Front	0.227	0.042	0.27		
		Back	0.421	0.042	0.46		
	Band 13	Front	0.247	0.042	0.29		
		Back	0.515	0.042	0.56		
	Band 5	Front	0.250	0.042	0.29		
		Back	0.682	0.042	0.72		
	Band 4	Front	0.694	0.042	0.74		
		Back	1.107	0.042	1.15		
	Band 2	Front	0.376	0.042	0.42		
		Back	0.887	0.042	0.93		
	Band 30	Front	0.335	0.042	0.38		
		Back	0.280	0.042	0.32		
	Band 7	Front	0.288	0.042	0.33		
		Back	0.398	0.042	0.44		

Test Engineer： Frank Qiao

17. Uncertainty Assessment

The component of uncertainly may generally be categorized according to the methods used to evaluate them. The evaluation of uncertainly by the statistical analysis of a series of observations is termed a Type An evaluation of uncertainty. The evaluation of uncertainty by means other than the statistical analysis of a series of observation is termed a Type B evaluation of uncertainty. Each component of uncertainty, however evaluated, is represented by an estimated standard deviation, termed standard uncertainty, which is determined by the positive square root of the estimated variance.

A Type A evaluation of standard uncertainty may be based on any valid statistical method for treating data. This includes calculating the standard deviation of the mean of a series of independent observations; using the method of least squares to fit a curve to the data in order to estimate the parameter of the curve and their standard deviations; or carrying out an analysis of variance in order to identify and quantify random effects in certain kinds of measurement.

A type B evaluation of standard uncertainty is typically based on scientific judgment using all of the relevant information available. These may include previous measurement data, experience, and knowledge of the behavior and properties of relevant materials and instruments, manufacture's specification, data provided in calibration reports and uncertainties assigned to reference data taken from handbooks. Broadly speaking, the uncertainty is either obtained from an outdoor source or obtained from an assumed distribution, such as the normal distribution, rectangular or triangular distributions indicated in table below.

Uncertainty Distributions	Normal	Rectangular	Triangular	U-Shape
Multi-plying Factor[(a)]	1/k[(b)]	$1/\sqrt{3}$	$1/\sqrt{6}$	$1/\sqrt{2}$

(a) standard uncertainty is determined as the product of the multiplying factor and the estimated range of variations in the measured quantity

(b) κ is the coverage factor

Table 17.1. Standard Uncertainty for Assumed Distribution

The combined standard uncertainty of the measurement result represents the estimated standard deviation of the result. It is obtained by combining the individual standard uncertainties of both Type A and Type B evaluation using the usual "root-sum-squares" (RSS) methods of combining standard deviations by taking the positive square root of the estimated variances.

Expanded uncertainty is a measure of uncertainty that defines an interval about the measurement result within which the measured value is confidently believed to lie. It is obtained by multiplying the combined standard uncertainty by a coverage factor. Typically, the coverage factor ranges from 2 to 3. Using a coverage factor allows the true value of a measured quantity to be specified with a defined probability within the specified uncertainty range. For purpose of this document, a coverage factor two is used, which corresponds to confidence interval of about 95 %. The DASY uncertainty Budget is shown in the following tables.

Error Description	Uncertainty Value (±%)	Probability Distribution	Divisor	Ci (1g)	Ci (10g)	Standard Uncertainty (1g)	Standard Uncertainty (10g)
Measurement System							
Probe Calibration	6.0	Normal	1	1	1	± 6.0 %	± 6.0 %
Axial Isotropy	4.7	Rectangular	√3	0.7	0.7	± 1.9 %	± 1.9 %
Hemispherical Isotropy	9.6	Rectangular	√3	0.7	0.7	± 3.9 %	± 3.9 %
Boundary Effects	1.0	Rectangular	√3	1	1	± 0.6 %	± 0.6 %
Linearity	4.7	Rectangular	√3	1	1	± 2.7 %	± 2.7 %
System Detection Limits	1.0	Rectangular	√3	1	1	± 0.6 %	± 0.6 %
Readout Electronics	0.3	Normal	1	1	1	± 0.3 %	± 0.3 %
Response Time	0.8	Rectangular	√3	1	1	± 0.5 %	± 0.5 %
Integration Time	2.6	Rectangular	√3	1	1	± 1.5 %	± 1.5 %
RF Ambient Noise	3.0	Rectangular	√3	1	1	± 1.7 %	± 1.7 %
RF Ambient Reflections	3.0	Rectangular	√3	1	1	± 1.7 %	± 1.7 %
Probe Positioner	0.4	Rectangular	√3	1	1	± 0.2 %	± 0.2 %
Probe Positioning	2.9	Rectangular	√3	1	1	± 1.7 %	± 1.7 %
Max. SAR Eval.	1.0	Rectangular	√3	1	1	± 0.6 %	± 0.6 %
Test Sample Related							
Device Positioning	2.9	Normal	1	1	1	± 2.9 %	± 2.9 %
Device Holder	3.6	Normal	1	1	1	± 3.6 %	± 3.6 %
Power Drift	5.0	Rectangular	√3	1	1	± 2.9 %	± 2.9 %
Phantom and Setup							
Phantom Uncertainty	4.0	Rectangular	√3	1	1	± 2.3 %	± 2.3 %
Liquid Conductivity (Target)	5.0	Rectangular	√3	0.64	0.43	± 1.8 %	± 1.2 %
Liquid Conductivity (Meas.)	2.5	Normal	1	0.64	0.43	± 1.6 %	± 1.1 %
Liquid Permittivity (Target)	5.0	Rectangular	√3	0.6	0.49	± 1.7 %	± 1.4 %
Liquid Permittivity (Meas.)	2.5	Normal	1	0.6	0.49	± 1.5 %	± 1.2 %
Combined Standard Uncertainty						± 11.0 %	± 10.8 %
Coverage Factor for 95 %						K=2	
Expanded Uncertainty						**± 22.0 %**	**± 21.5 %**

Table 17.2. Uncertainty Budget for frequency range 300 MHz to 3 GHz

Error Description	Uncertainty Value (±%)	Probability Distribution	Divisor	Ci (1g)	Ci (10g)	Standard Uncertainty (1g)	Standard Uncertainty (10g)
Measurement System							
Probe Calibration	6.55	Normal	1	1	1	± 6.55 %	± 6.55 %
Axial Isotropy	4.7	Rectangular	√3	0.7	0.7	± 1.9 %	± 1.9 %
Hemispherical Isotropy	9.6	Rectangular	√3	0.7	0.7	± 3.9 %	± 3.9 %
Boundary Effects	2.0	Rectangular	√3	1	1	± 1.2 %	± 1.2 %
Linearity	4.7	Rectangular	√3	1	1	± 2.7 %	± 2.7 %
System Detection Limits	1.0	Rectangular	√3	1	1	± 0.6 %	± 0.6 %
Readout Electronics	0.3	Normal	1	1	1	± 0.3 %	± 0.3 %
Response Time	0.8	Rectangular	√3	1	1	± 0.5 %	± 0.5 %
Integration Time	2.6	Rectangular	√3	1	1	± 1.5 %	± 1.5 %
RF Ambient Noise	3.0	Rectangular	√3	1	1	± 1.7 %	± 1.7 %
RF Ambient Reflections	3.0	Rectangular	√3	1	1	± 1.7 %	± 1.7 %
Probe Positioner	0.8	Rectangular	√3	1	1	± 0.5 %	± 0.5 %
Probe Positioning	9.9	Rectangular	√3	1	1	± 5.7 %	± 5.7 %
Max. SAR Eval.	4.0	Rectangular	√3	1	1	± 2.3 %	± 2.3 %
Test Sample Related							
Device Positioning	2.9	Normal	1	1	1	± 2.9 %	± 2.9 %
Device Holder	3.6	Normal	1	1	1	± 3.6 %	± 3.6 %
Power Drift	5.0	Rectangular	√3	1	1	± 2.9 %	± 2.9 %
Phantom and Setup							
Phantom Uncertainty	4.0	Rectangular	√3	1	1	± 2.3 %	± 2.3 %
Liquid Conductivity (Target)	5.0	Rectangular	√3	0.64	0.43	± 1.8 %	± 1.2 %
Liquid Conductivity (Meas.)	2.5	Normal	1	0.64	0.43	± 1.6 %	± 1.1 %
Liquid Permittivity (Target)	5.0	Rectangular	√3	0.6	0.49	± 1.7 %	± 1.4 %
Liquid Permittivity (Meas.)	2.5	Normal	1	0.6	0.49	± 1.5 %	± 1.2 %
Combined Standard Uncertainty						± 12.8 %	± 12.6 %
Coverage Factor for 95 %						K=2	
Expanded Uncertainty						**± 25.6 %**	**± 25.2 %**

Table 17.3. Uncertainty Budget for frequency range 3 GHz to 6 GHz

18. References

[1] FCC 47 CFR Part 2 “Frequency Allocations and Radio Treaty Matters; General Rules and Regulations”

[2] ANSI/IEEE Std. C95.1-1992, “IEEE Standard for Safety Levels with Respect to Human Exposure to Radio Frequency Electromagnetic Fields, 3 kHz to 300 GHz”, September 1992

[3] IEEE Std. 1528-2003, “Recommended Practice for Determining the Peak Spatial-Average Specific Absorption Rate (SAR) in the Human Head from Wireless Communications Devices: Measurement Techniques”, December 2003

[4] SPEAG DASY System Handbook

[5] FCC KDB 248227 D01 v02r01, “SAR Guidance for IEEE 802.11 (WiFi) Transmitters”, Jun 2015.

[6] FCC KDB 447498 D01 v05r02, “Mobile and Portable Device RF Exposure Procedures and Equipment Authorization Policies”, Feb 2014

[7] FCC KDB 648474 D04 v01r02, “SAR Evaluation Considerations for Wireless Handsets”, Dec 2013.

[8] FCC KDB 941225 D01 v03, “3G SAR MEAUREMENT PROCEDURES”, Oct 2014

[9] FCC KDB 941225 D05 v02r03, “SAR Evaluation Considerations for LTE Devices”, Dec 2013

[10] FCC KDB 941225 D05A v01r01, “Rel. 10 LTE SAR Test Guidance and KDB Inquiries”, Aug 2014

[11] FCC KDB 941225 D06 v02, "SAR Evaluation Procedures for Portable Devices with Wireless Router Capabilities", Oct 2014.

[12] FCC KDB 865664 D01 v01r03, "SAR Measurement Requirements for 100 MHz to 6 GHz", Feb 2014.

[13] FCC KDB 865664 D02 v01r01, “RF Exposure Compliance Reporting and Documentation Considerations” May 2013.

Appendix A. Plots of System Performance Check

The plots are shown as follows.

Test Laboratory: Sporton International Inc. SAR/HAC Testing Lab Date: 2015/6/4

System Check_Head_750MHz_150604

DUT: D750V3-SN:1132

Communication System: CW; Frequency: 750 MHz;Duty Cycle: 1:1
Medium: HSL_750_150604 Medium parameters used: f = 750 MHz; σ = 0.898 mho/m; ε_r = 43.176; ρ = 1000 kg/m^3
Ambient Temperature：23.3 ℃； Liquid Temperature：22.3 ℃

DASY5 Configuration:
- Probe: EX3DV4 - SN3954; ConvF(10.93, 10.93, 10.93); Calibrated: 2014/11/21;
- Sensor-Surface: 1.4mm (Mechanical Surface Detection)
- Electronics: DAE4 Sn1279; Calibrated: 2014/7/23
- Phantom: SAM_Left; Type: QD000P40CD; Serial: TP:1542
- Measurement SW: DASY52, Version 52.8 (2);SEMCAD X Version 14.6.6 (6477)

Configuration/Pin=250mW/Area Scan (61x61x1): Measurement grid: dx=15mm, dy=15mm
Maximum value of SAR (interpolated) = 2.61 mW/g

Configuration/Pin=250mW/Zoom Scan (5x5x7)/Cube 0: Measurement grid: dx=8mm, dy=8mm, dz=5mm
Reference Value = 55.493 V/m; Power Drift = -0.04 dB
Peak SAR (extrapolated) = 3.079 mW/g
SAR(1 g) = 2.09 mW/g; SAR(10 g) = 1.4 mW/g
Maximum value of SAR (measured) = 2.63 mW/g

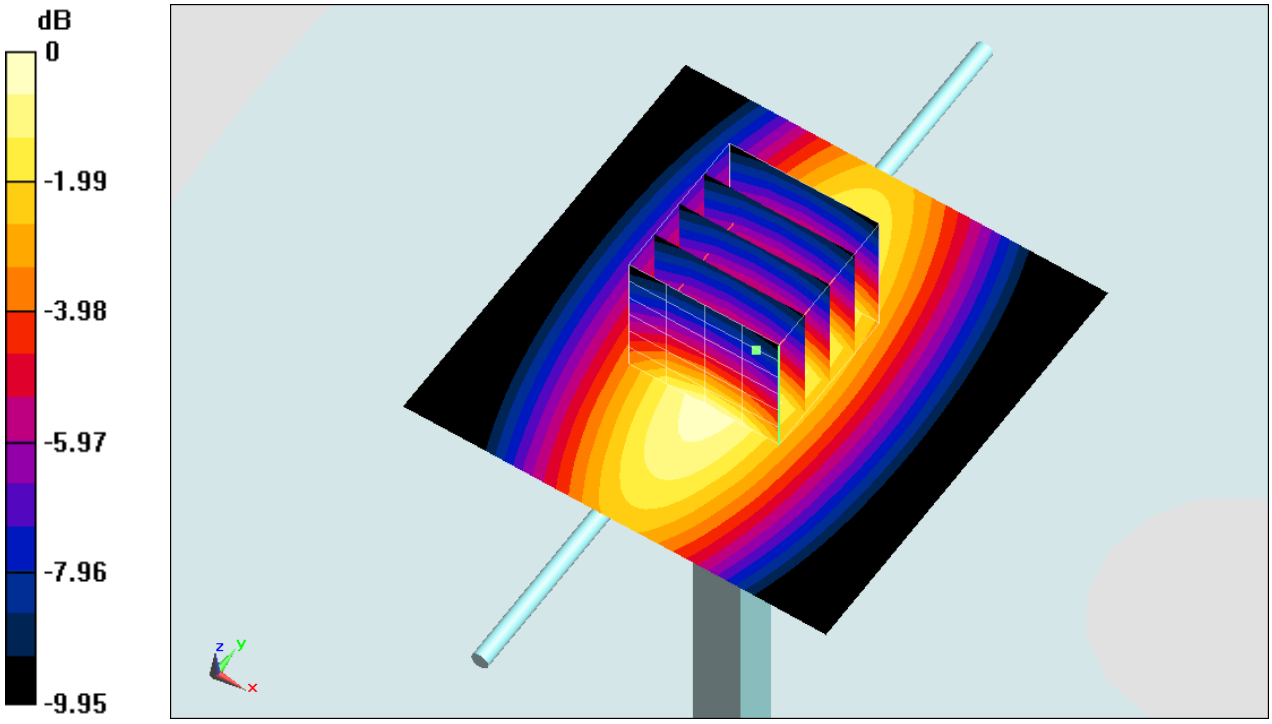

0 dB = 2.63 mW/g = 8.40 dB mW/g

Test Laboratory: Sporton International Inc. SAR/HAC Testing Lab Date: 2015/6/1

System Check_Body_750MHz_150601

DUT: D750V3-SN:1132

Communication System: CW; Frequency: 750 MHz;Duty Cycle: 1:1
Medium: MSL_750_150601 Medium parameters used: f = 750 MHz; σ = 0.968 mho/m; ε_r = 57.868; ρ = 1000 kg/m^3
Ambient Temperature：23.5 ℃； Liquid Temperature：22.5 ℃

DASY5 Configuration:
- Probe: EX3DV4 - SN3578; ConvF(9.29, 9.29, 9.29); Calibrated: 2015/3/31;
- Sensor-Surface: 1.4mm (Mechanical Surface Detection)
- Electronics: DAE4 Sn916; Calibrated: 2014/12/29
- Phantom: SAM_Right; Type: QD000P40CC; Serial: TP:1383
- Measurement SW: DASY52, Version 52.8 (2);SEMCAD X Version 14.6.6 (6477)

Configuration/Pin=250mW/Area Scan (61x61x1): Measurement grid: dx=15mm, dy=15mm
Maximum value of SAR (interpolated) = 2.64 mW/g

Configuration/Pin=250mW/Zoom Scan (5x5x7)/Cube 0: Measurement grid: dx=8mm, dy=8mm, dz=5mm
Reference Value = 54.142 V/m; Power Drift = 0.04 dB
Peak SAR (extrapolated) = 2.899 mW/g
SAR(1 g) = 2.05 mW/g; SAR(10 g) = 1.38 mW/g
Maximum value of SAR (measured) = 2.54 mW/g

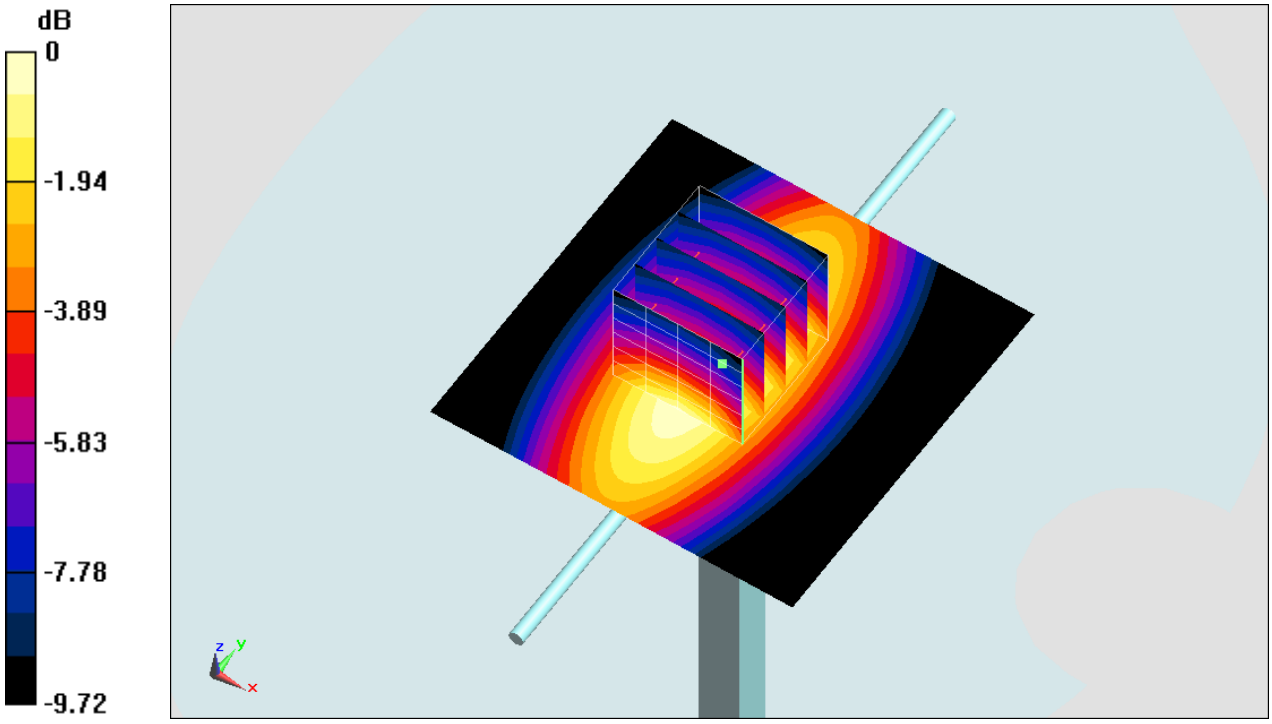

0 dB = 2.54 mW/g = 8.10 dB mW/g

Test Laboratory: Sporton International Inc. SAR/HAC Testing Lab Date: 2015/6/1

System Check_Body_750MHz_150601

DUT: D750V3-SN:1132

Communication System: CW; Frequency: 750 MHz;Duty Cycle: 1:1
Medium: MSL_750_150601 Medium parameters used: f = 750 MHz; σ = 0.968 mho/m; ε_r = 57.868; ρ = 1000 kg/m^3
Ambient Temperature：23.5 ℃； Liquid Temperature：22.5 ℃

DASY5 Configuration:
- Probe: EX3DV4 - SN3697; ConvF(8.83, 8.83, 8.83); Calibrated: 2014/9/29;
- Sensor-Surface: 1.4mm (Mechanical Surface Detection)
- Electronics: DAE4 Sn1388; Calibrated: 2014/9/24
- Phantom: SAM_Right; Type: QD000P40CC; Serial: TP:1383
- Measurement SW: DASY52, Version 52.8 (2);SEMCAD X Version 14.6.6 (6477)

Configuration/Pin=250mW/Area Scan (61x61x1): Measurement grid: dx=15mm, dy=15mm
Maximum value of SAR (interpolated) = 2.59 mW/g

Configuration/Pin=250mW/Zoom Scan (5x5x7)/Cube 0: Measurement grid: dx=8mm, dy=8mm, dz=5mm
Reference Value = 52.880 V/m; Power Drift = -0.04 dB
Peak SAR (extrapolated) = 3.025 mW/g
SAR(1 g) = 2.06 mW/g; SAR(10 g) = 1.37 mW/g
Maximum value of SAR (measured) = 2.59 mW/g

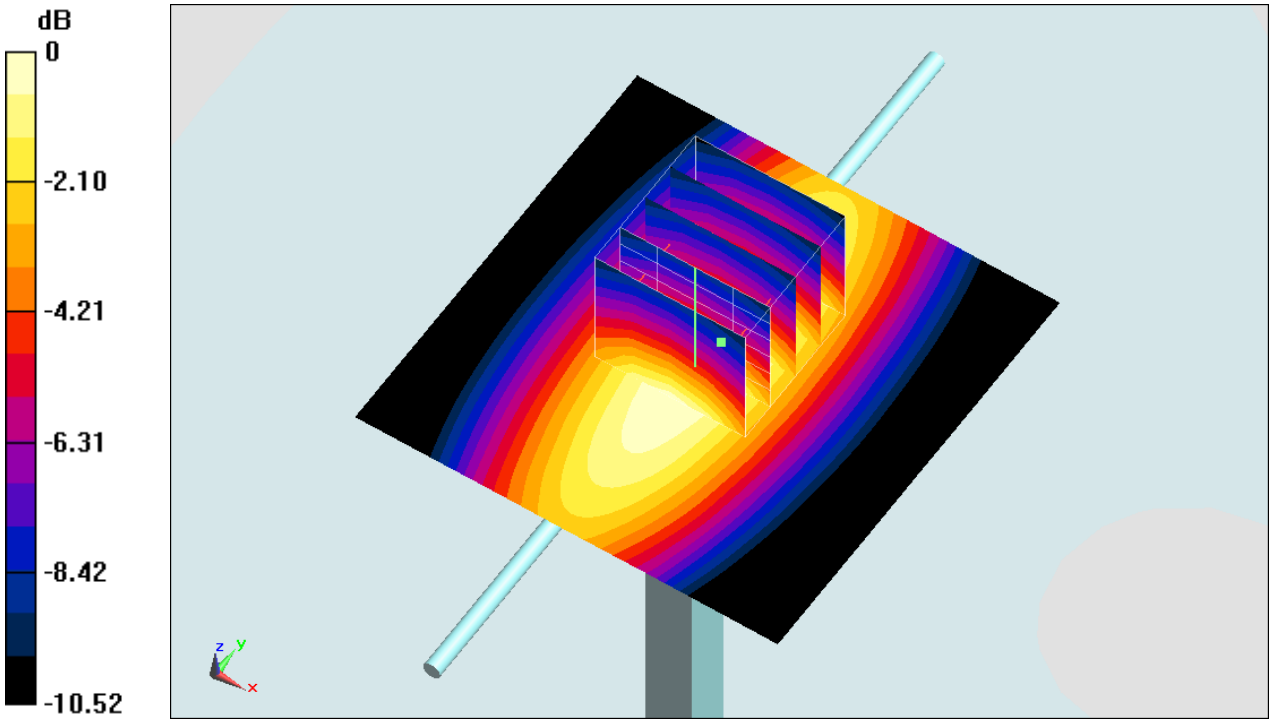

0 dB = 2.59 mW/g = 8.27 dB mW/g

Test Laboratory: Sporton International Inc. SAR/HAC Testing Lab Date: 2015/6/3

System Check_Head_835MHz_150603

DUT: D835V2-SN:499

Communication System: CW; Frequency: 835 MHz;Duty Cycle: 1:1
Medium: HSL_850_150603 Medium parameters used: f = 835 MHz; σ = 0.896 mho/m; ε_r = 41.887; ρ = 1000 kg/m^3
Ambient Temperature：23.3 ℃； Liquid Temperature：22.3 ℃

DASY5 Configuration:
- Probe: ES3DV3 - SN3270; ConvF(6.43, 6.43, 6.43); Calibrated: 2014/9/26;
- Sensor-Surface: 2mm (Mechanical Surface Detection)
- Electronics: DAE4 Sn778; Calibrated: 2014/8/21
- Phantom: SAM_Left; Type: QD000P40CD; Serial: TP:1542
- Measurement SW: DASY52, Version 52.8 (2);SEMCAD X Version 14.6.6 (6477)

Configuration/Pin=250mW/Area Scan (61x61x1): Measurement grid: dx=15mm, dy=15mm
Maximum value of SAR (interpolated) = 2.67 mW/g

Configuration/Pin=250mW/Zoom Scan (5x5x7)/Cube 0: Measurement grid: dx=8mm, dy=8mm, dz=5mm
Reference Value = 52.215 V/m; Power Drift = 0.01 dB
Peak SAR (extrapolated) = 3.363 mW/g
SAR(1 g) = 2.26 mW/g; SAR(10 g) = 1.49 mW/g
Maximum value of SAR (measured) = 2.64 mW/g

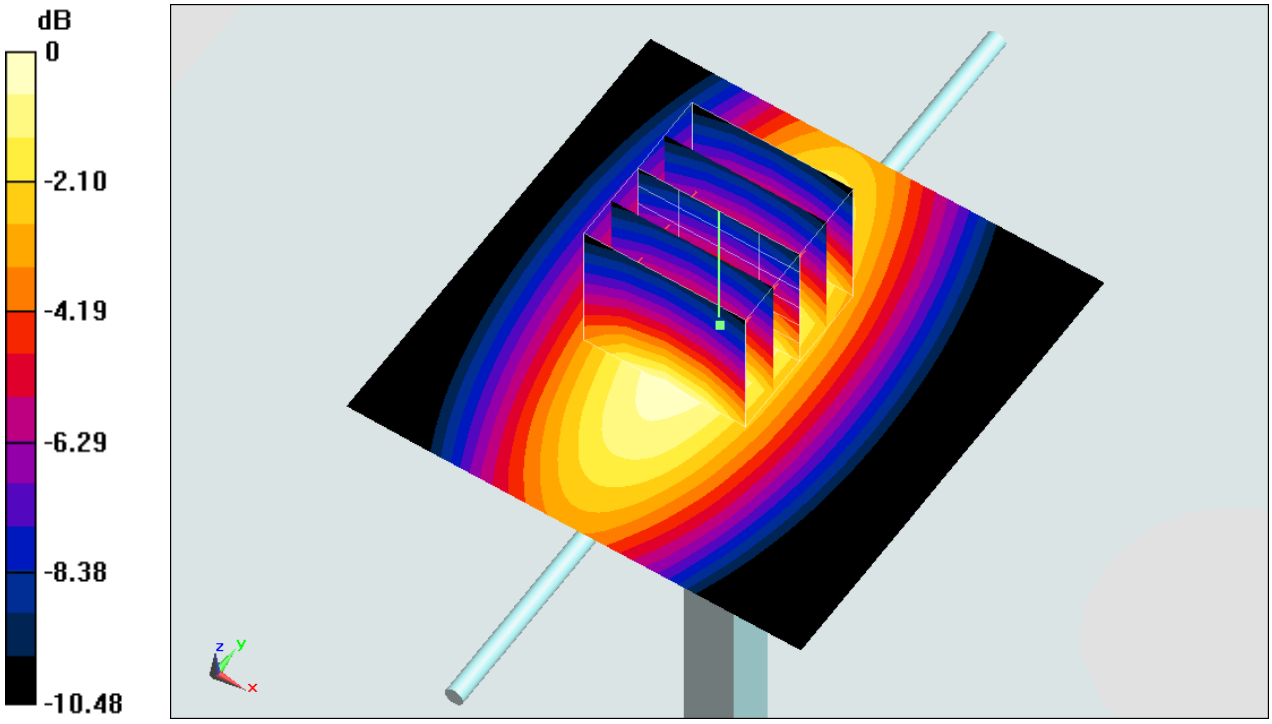

0 dB = 2.64 mW/g = 8.43 dB mW/g

Test Laboratory: Sporton International Inc. SAR/HAC Testing Lab Date: 2015/6/3

System Check_Head_835MHz_150603

DUT: D835V2-SN:499

Communication System: CW; Frequency: 835 MHz;Duty Cycle: 1:1
Medium: HSL_850_150603 Medium parameters used: f = 835 MHz; σ = 0.896 S/m; ε_r = 41.887; ρ = 1000 kg/m^3
Ambient Temperature：23.3 ℃； Liquid Temperature：22.3 ℃

DASY5 Configuration:
- Probe: EX3DV4 - SN3955; ConvF(10.04, 10.04, 10.04); Calibrated: 2014/11/21;
- Sensor-Surface: 1.4mm (Mechanical Surface Detection)
- Electronics: DAE4 Sn1399; Calibrated: 2014/11/13
- Phantom: SAM_Left; Type: QD000P40CD; Serial: TP:1542
- Measurement SW: DASY52, Version 52.8 (8);SEMCAD X Version 14.6.10 (7331)

Configuration/Pin=250mW/Area Scan (61x61x1): Interpolated grid: dx=1.500 mm, dy=1.500 mm
Maximum value of SAR (interpolated) = 3.09 W/kg

Configuration/Pin=250mW/Zoom Scan (5x5x7)/Cube 0: Measurement grid: dx=8mm, dy=8mm, dz=5mm
Reference Value = 60.56 V/m; Power Drift = -0.05 dB
Peak SAR (extrapolated) = 3.49 W/kg
SAR(1 g) = 2.27 W/kg; SAR(10 g) = 1.49 W/kg
Maximum value of SAR (measured) = 3.03 W/kg

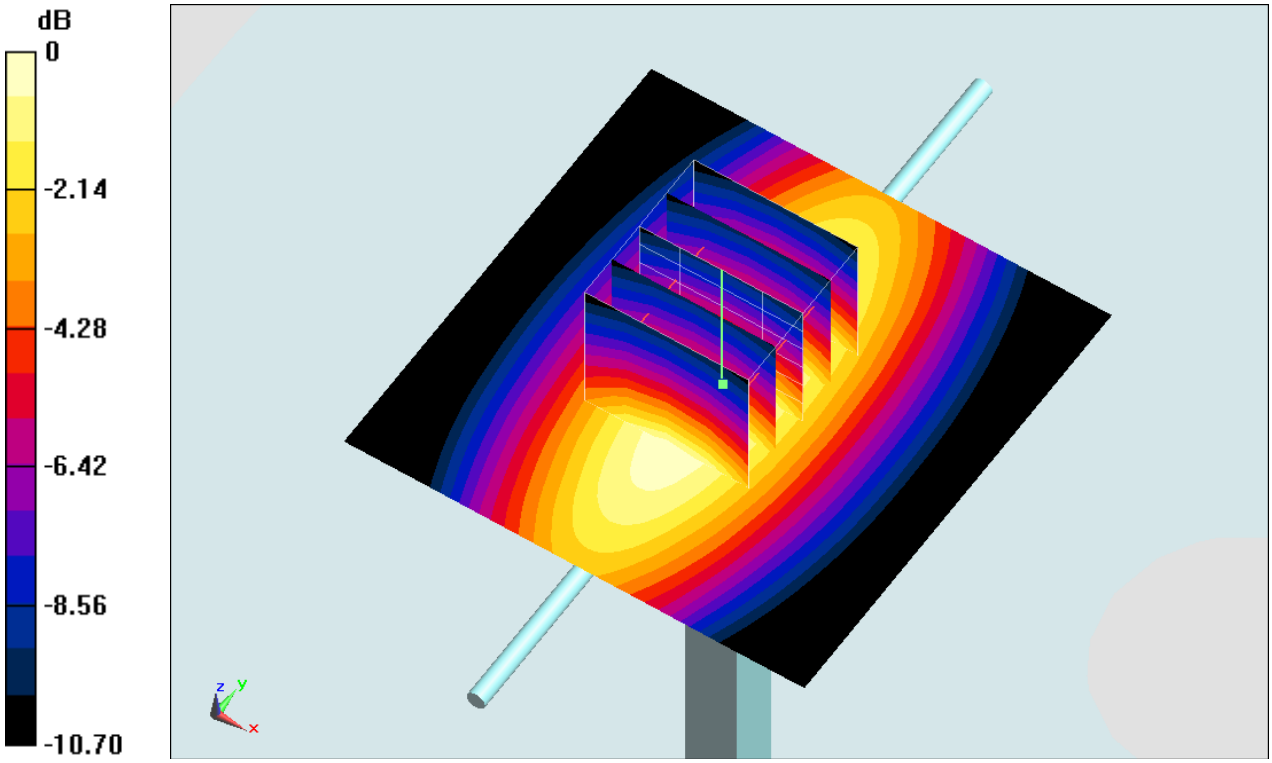

0 dB = 3.03 W/kg = 4.81 dBW/kg

Test Laboratory: Sporton International Inc. SAR/HAC Testing Lab Date: 2015/5/31

System Check_Body_835MHz_150531

DUT: D835V2-SN:499

Communication System: CW; Frequency: 835 MHz;Duty Cycle: 1:1
Medium: MSL_850_150531 Medium parameters used: f = 835 MHz; σ = 0.983 mho/m; ε_r = 56.091; ρ = 1000 kg/m^3
Ambient Temperature：23.4 ℃； Liquid Temperature：22.4 ℃

DASY5 Configuration:
- Probe: EX3DV4 - SN3578; ConvF(9.27, 9.27, 9.27); Calibrated: 2015/3/31;
- Sensor-Surface: 1.4mm (Mechanical Surface Detection)
- Electronics: DAE4 Sn916; Calibrated: 2014/12/29
- Phantom: SAM_Right; Type: QD000P40CC; Serial: TP:1383
- Measurement SW: DASY52, Version 52.8 (2);SEMCAD X Version 14.6.6 (6477)

Configuration/Pin=250mW/Area Scan (61x61x1): Measurement grid: dx=15mm, dy=15mm
Maximum value of SAR (interpolated) = 2.77 mW/g

Configuration/Pin=250mW/Zoom Scan (5x5x7)/Cube 0: Measurement grid: dx=8mm, dy=8mm, dz=5mm
Reference Value = 55.606 V/m; Power Drift = -0.04 dB
Peak SAR (extrapolated) = 3.162 mW/g
SAR(1 g) = 2.18 mW/g; SAR(10 g) = 1.45 mW/g
Maximum value of SAR (measured) = 2.71 mW/g

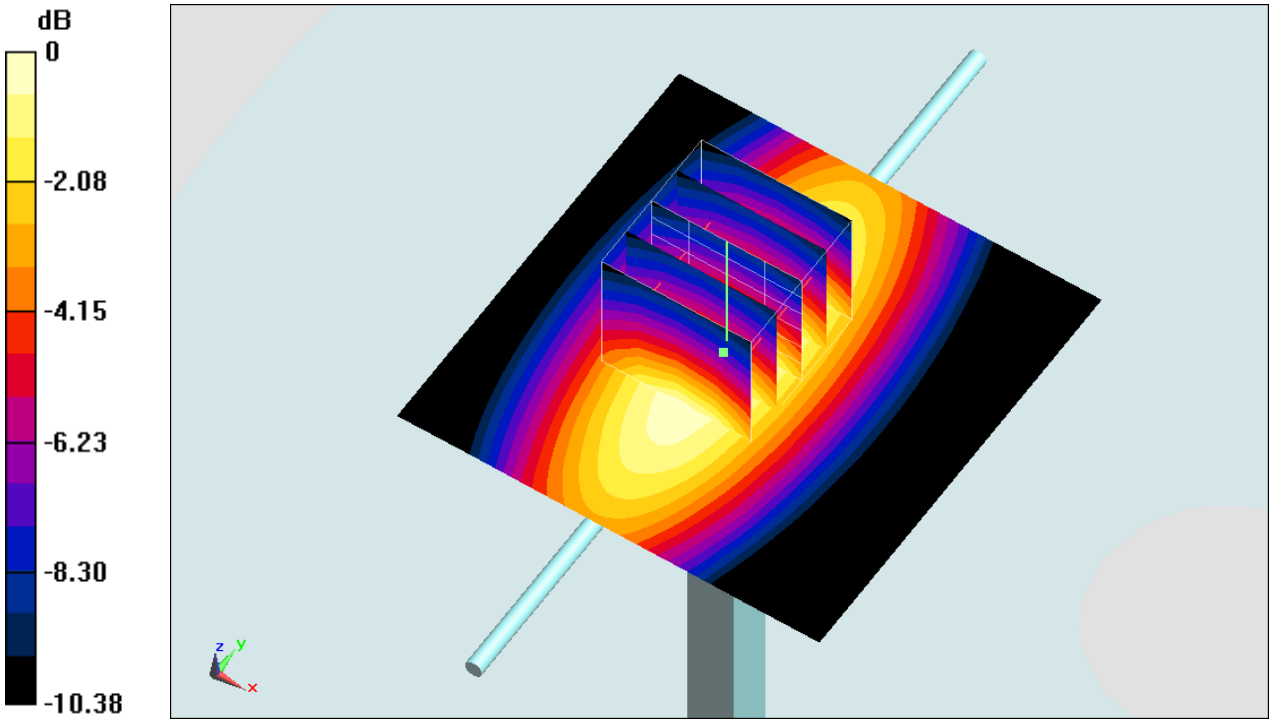

0 dB = 2.71 mW/g = 8.66 dB mW/g

Test Laboratory: Sporton International Inc. SAR/HAC Testing Lab Date: 2015/6/2

System Check_Head_1750MHz_150602

DUT: D1750V2-SN:1068

Communication System: CW; Frequency: 1750 MHz;Duty Cycle: 1:1
Medium: HSL_1750_150602 Medium parameters used: f = 1750 MHz; σ = 1.366 mho/m; ε_r = 39.761; ρ = 1000 kg/m^3
Ambient Temperature：23.7 ℃； Liquid Temperature：22.7 ℃

DASY5 Configuration:
- Probe: EX3DV4 - SN3697; ConvF(7.98, 7.98, 7.98); Calibrated: 2014/9/29;
- Sensor-Surface: 1.4mm (Mechanical Surface Detection)
- Electronics: DAE4 Sn1388; Calibrated: 2014/9/24
- Phantom: SAM_Left; Type: QD000P40CD; Serial: TP:1542
- Measurement SW: DASY52, Version 52.8 (2);SEMCAD X Version 14.6.6 (6477)

Configuration/Pin=250mW/Area Scan (61x61x1): Measurement grid: dx=15mm, dy=15mm
Maximum value of SAR (interpolated) = 13.3 mW/g

Configuration/Pin=250mW/Zoom Scan (5x5x7)/Cube 0: Measurement grid: dx=8mm, dy=8mm, dz=5mm
Reference Value = 92.114 V/m; Power Drift = 0.02 dB
Peak SAR (extrapolated) = 16.082 mW/g
SAR(1 g) = 8.89 mW/g; SAR(10 g) = 4.7 mW/g
Maximum value of SAR (measured) = 12.5 mW/g

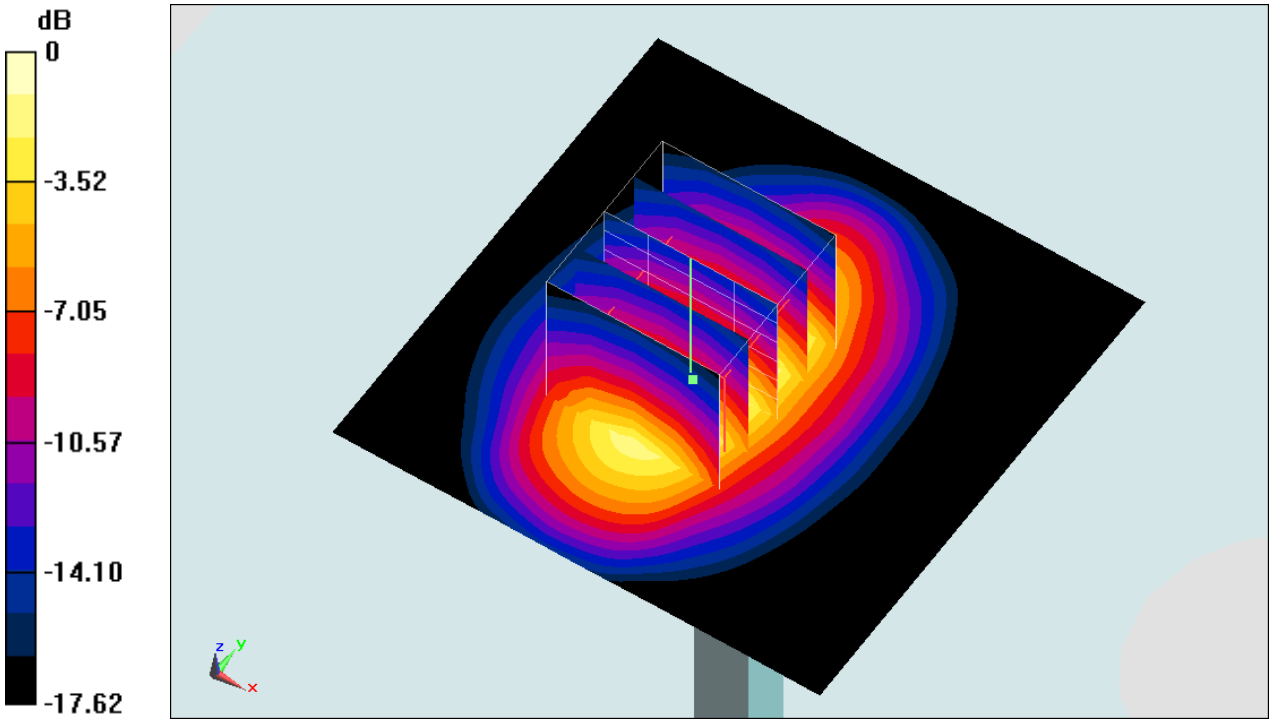

0 dB = 12.5 mW/g = 21.94 dB mW/g

Test Laboratory: Sporton International Inc. SAR/HAC Testing Lab Date: 2015/5/31

System Check_Body_1750MHz_150531

DUT: D1750V2-SN:1068

Communication System: CW; Frequency: 1750 MHz;Duty Cycle: 1:1
Medium: MSL_1750_150531 Medium parameters used: f = 1750 MHz; σ = 1.529 mho/m; ε_r = 52.221; ρ = 1000 kg/m^3
Ambient Temperature：23.6 ℃； Liquid Temperature：22.6 ℃

DASY5 Configuration:
- Probe: EX3DV4 - SN3578; ConvF(7.65, 7.65, 7.65); Calibrated: 2015/3/31;
- Sensor-Surface: 1.4mm (Mechanical Surface Detection)
- Electronics: DAE4 Sn916; Calibrated: 2014/12/29
- Phantom: SAM_Left; Type: QD000P40CD; Serial: TP:1542
- Measurement SW: DASY52, Version 52.8 (2);SEMCAD X Version 14.6.6 (6477)

Configuration/Pin=250mW/Area Scan (61x61x1): Measurement grid: dx=15mm, dy=15mm
Maximum value of SAR (interpolated) = 13.3 mW/g

Configuration/Pin=250mW/Zoom Scan (5x5x7)/Cube 0: Measurement grid: dx=8mm, dy=8mm, dz=5mm
Reference Value = 91.534 V/m; Power Drift = 0.00 dB
Peak SAR (extrapolated) = 15.441 mW/g
SAR(1 g) = 8.82 mW/g; SAR(10 g) = 4.72 mW/g
Maximum value of SAR (measured) = 13.3 mW/g

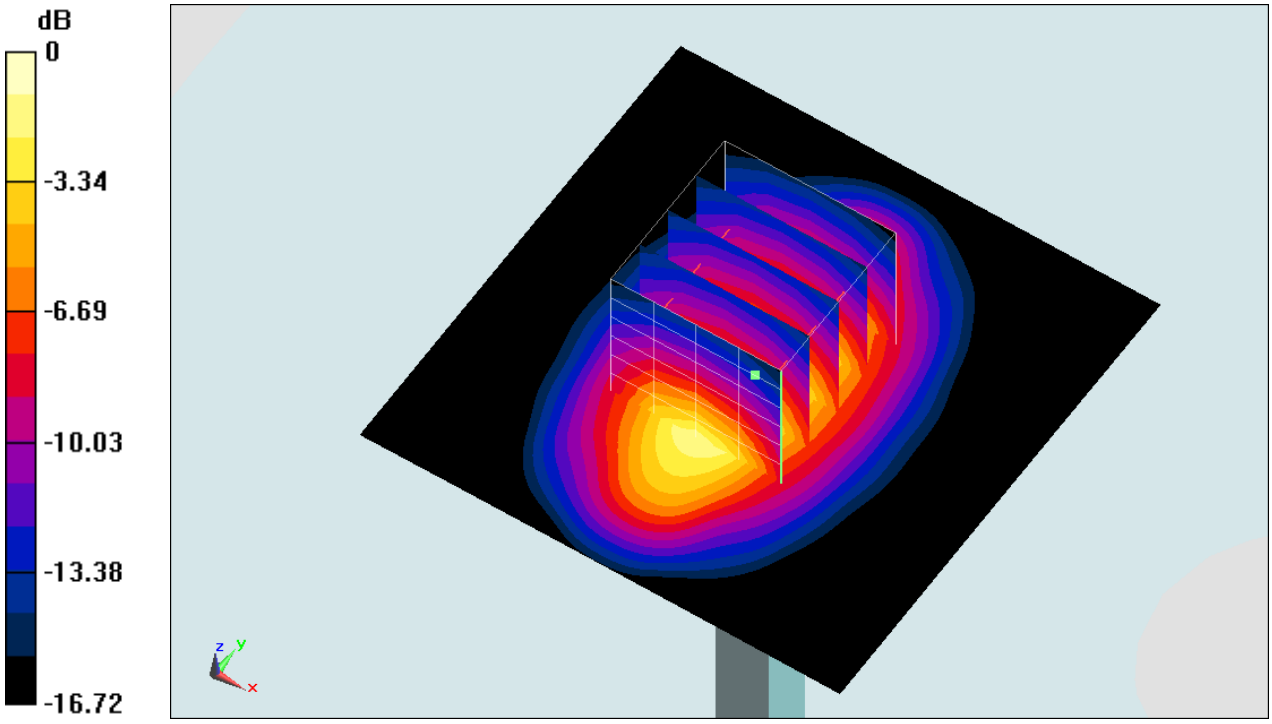

0 dB = 13.3 mW/g = 22.48 dB mW/g

Test Laboratory: Sporton International Inc. SAR/HAC Testing Lab Date: 2015/6/1

System Check_Head_1900MHz_150601

DUT: D1900V2-SN:5d041

Communication System: CW; Frequency: 1900 MHz;Duty Cycle: 1:1
Medium: HSL_1900_150601 Medium parameters used: f = 1900 MHz; σ = 1.408 mho/m; ε_r = 40.014; ρ = 1000 kg/m^3
Ambient Temperature：23.3 ℃； Liquid Temperature：22.3 ℃

DASY5 Configuration:
- Probe: EX3DV4 - SN3697; ConvF(7.71, 7.71, 7.71); Calibrated: 2014/9/29;
- Sensor-Surface: 1.4mm (Mechanical Surface Detection)
- Electronics: DAE4 Sn1388; Calibrated: 2014/9/24
- Phantom: SAM_Left; Type: QD000P40CD; Serial: TP:1542
- Measurement SW: DASY52, Version 52.8 (2);SEMCAD X Version 14.6.6 (6477)

Configuration/Pin=250mW/Area Scan (61x61x1): Measurement grid: dx=15mm, dy=15mm
Maximum value of SAR (interpolated) = 14.3 mW/g

Configuration/Pin=250mW/Zoom Scan (5x5x7)/Cube 0: Measurement grid: dx=8mm, dy=8mm, dz=5mm
Reference Value = 100.2 V/m; Power Drift = 0.06 dB
Peak SAR (extrapolated) = 18.276 mW/g
SAR(1 g) = 9.9 mW/g; SAR(10 g) = 5.12 mW/g
Maximum value of SAR (measured) = 14.0 mW/g

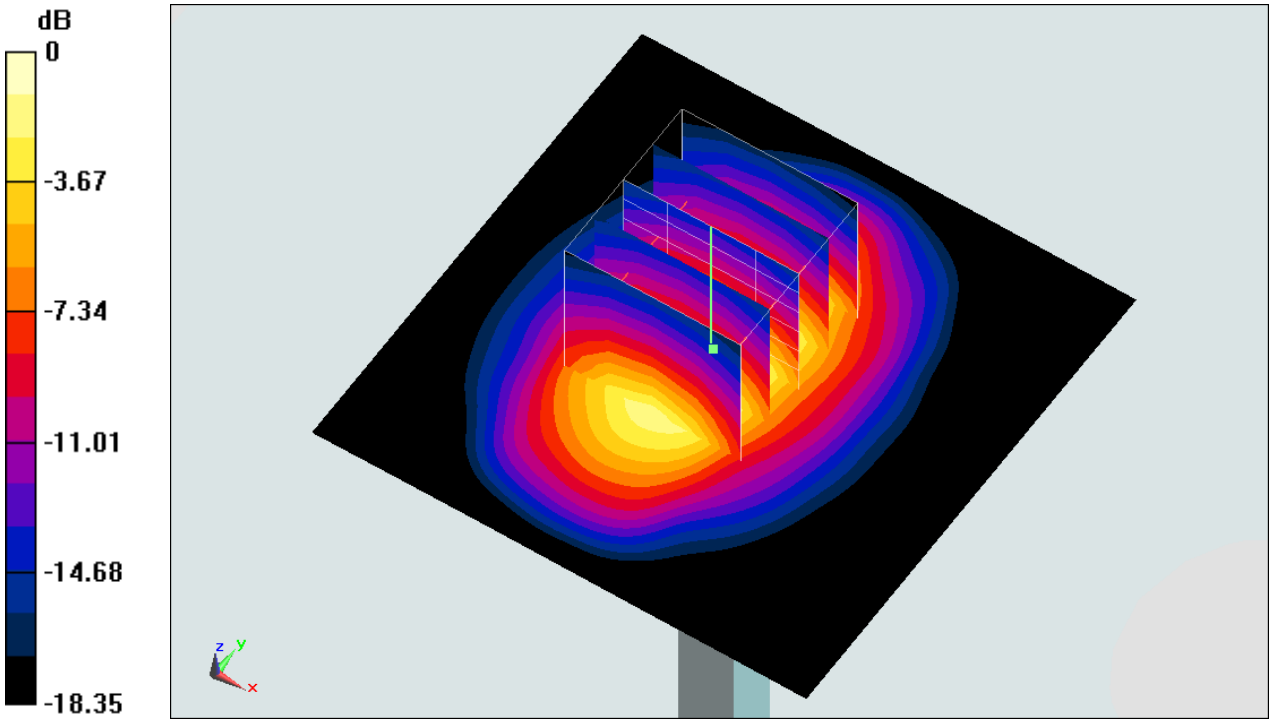

0 dB = 14.0 mW/g = 22.92 dB mW/g

Test Laboratory: Sporton International Inc. SAR/HAC Testing Lab Date: 2015/5/29

System Check_Body_1900MHz_150529

DUT: D1900V2-SN:5d041

Communication System: CW; Frequency: 1900 MHz;Duty Cycle: 1:1
Medium: MSL_1900_150529 Medium parameters used: f = 1900 MHz; σ = 1.542 S/m; ε_r = 54.917; ρ = 1000 kg/m^3
Ambient Temperature：23.5 ℃； Liquid Temperature：22.5 ℃

DASY5 Configuration
- Probe: EX3DV4 - SN3955; ConvF(7.89, 7.89, 7.89); Calibrated: 2014/11/21;
- Sensor-Surface: 1.4mm (Mechanical Surface Detection)
- Electronics: DAE4 Sn1399; Calibrated: 2014/11/13
- Phantom: SAM_Right; Type: QD000P40CD; Serial: TP:1801
- Measurement SW: DASY52, Version 52.8 (8); SEMCAD X Version 14.6.10 (7331)

Configuration/Pin=250mW/Area Scan (61x61x1): Interpolated grid: dx=1.500 mm, dy=1.500 mm
Maximum value of SAR (interpolated) = 14.1 W/kg

Configuration/Pin=250mW/Zoom Scan (5x5x7)/Cube 0: Measurement grid: dx=8mm, dy=8mm, dz=5mm
Reference Value = 97.79 V/m; Power Drift = 0.01 dB
Peak SAR (extrapolated) = 17.2 W/kg
SAR(1 g) = 10 W/kg; SAR(10 g) = 5.34 W/kg
Maximum value of SAR (measured) = 14.0 W/kg

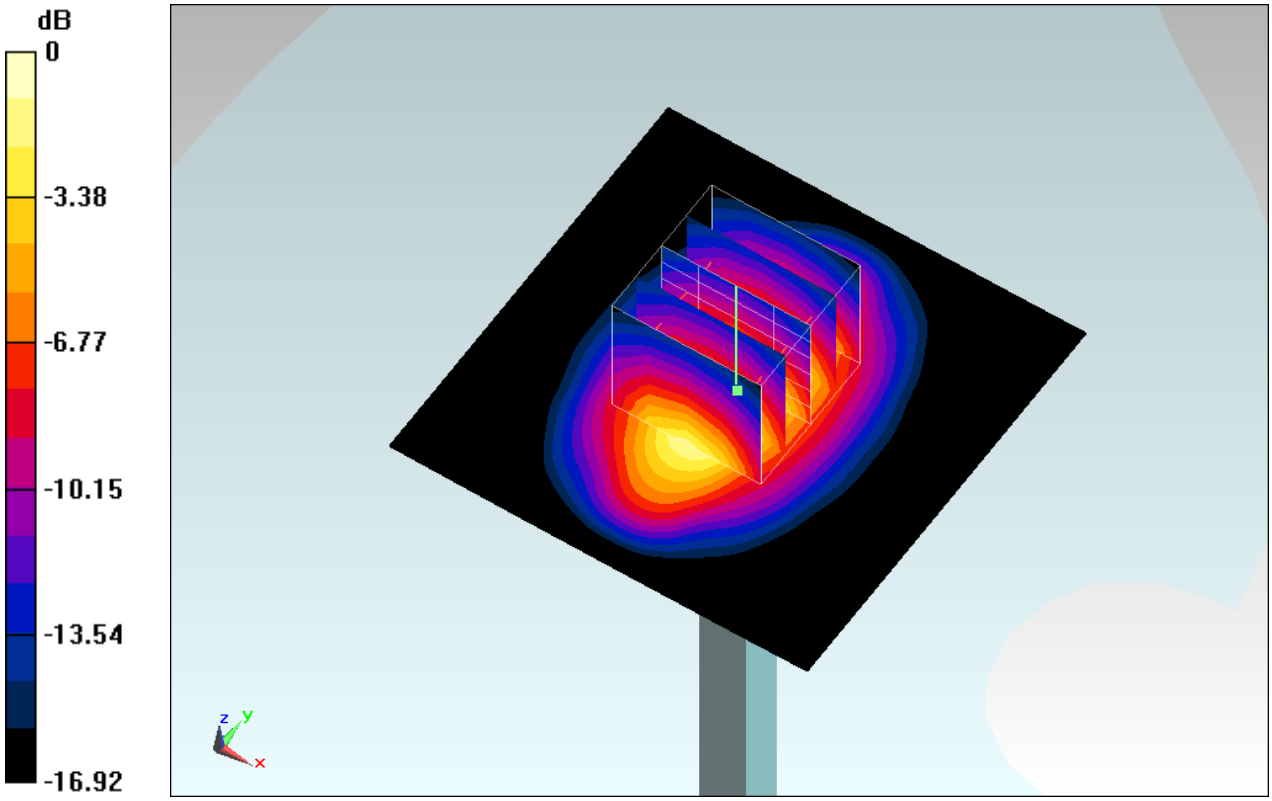

0 dB = 14.0 W/kg = 11.46 dBW/kg

Test Laboratory: Sporton International Inc. SAR/HAC Testing Lab Date: 2015/5/30

System Check_Body_1900MHz_150530

DUT: D1900V2_SN:5d041

Communication System: CW; Frequency: 1900 MHz;Duty Cycle: 1:1
Medium: MSL_1900_150530 Medium parameters used: f = 1900 MHz; σ = 1.54 mho/m; ε_r = 54.388; ρ = 1000 kg/m^3
Ambient Temperature：23.6 ℃； Liquid Temperature：22.6 ℃

DASY5 Configuration:
- Probe: EX3DV4 - SN3578; ConvF(7.28, 7.28, 7.28); Calibrated: 2015/3/31;
- Sensor-Surface: 1.4mm (Mechanical Surface Detection)
- Electronics: DAE4 Sn916; Calibrated: 2014/12/29
- Phantom: SAM_Left; Type: QD000P40CD; Serial: TP:1542
- Measurement SW: DASY52, Version 52.8 (2);SEMCAD X Version 14.6.6 (6477)

Configuration/Pin=250mW/Area Scan (61x61x1): Measurement grid: dx=15mm, dy=15mm
Maximum value of SAR (interpolated) = 14.7 mW/g

Configuration/Pin=250mW/Zoom Scan (5x5x7)/Cube 0: Measurement grid: dx=8mm, dy=8mm, dz=5mm
Reference Value = 101.9 V/m; Power Drift = -0.00 dB
Peak SAR (extrapolated) = 17.309 mW/g
SAR(1 g) = 9.5 mW/g; SAR(10 g) = 4.91 mW/g
Maximum value of SAR (measured) = 14.7 mW/g

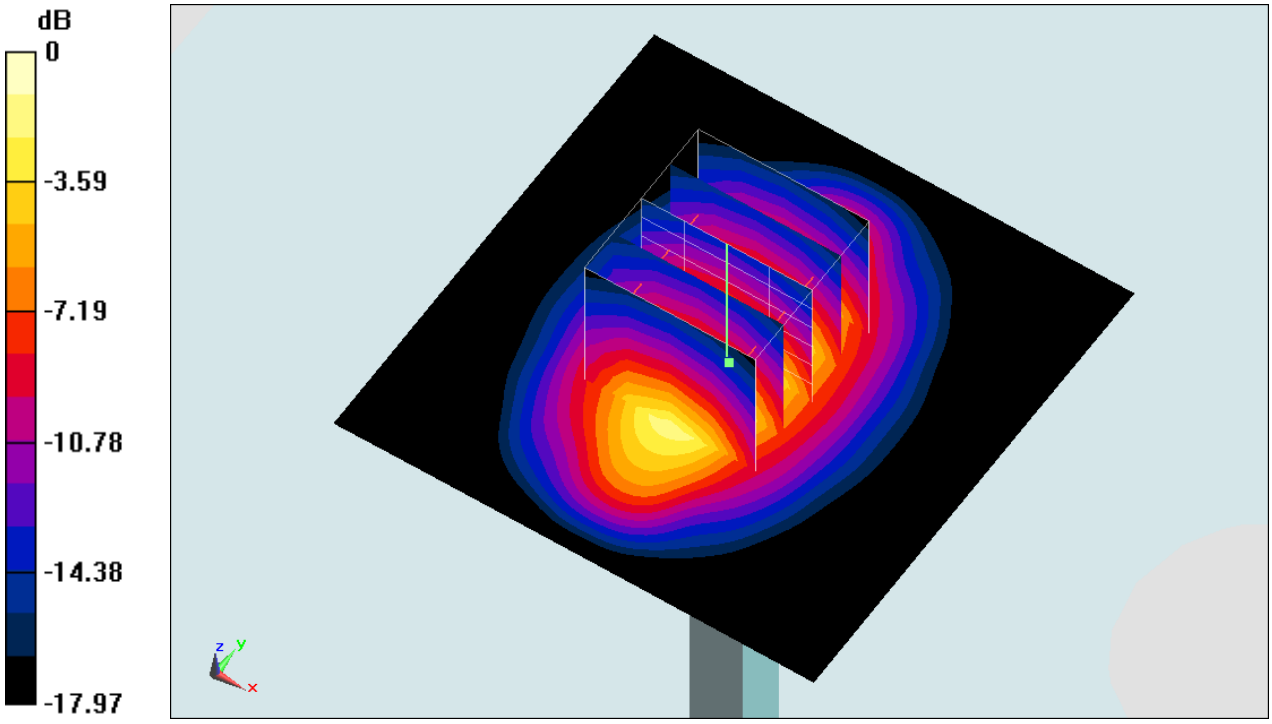

0 dB = 14.7 mW/g = 23.35 dB mW/g

Test Laboratory: Sporton International Inc. SAR/HAC Testing Lab Date: 2015/6/4

System Check_Head_2300MHz_150604

DUT: D2300V2-SN:1006

Communication System: CW ; Frequency: 2300 MHz;Duty Cycle: 1:1
Medium: HSL2300_150604 Medium parameters used: f = 2300 MHz; σ = 1.683 S/m; ε_r = 39.129; ρ = 1000 kg/m^3
Ambient Temperature：23.3 ℃； Liquid Temperature：22.3 ℃

DASY5 Configuration:
- Probe: EX3DV4 - SN3578; ConvF(7.41, 7.41, 7.41); Calibrated: 2015/3/31;
- Sensor-Surface: 1.4mm (Mechanical Surface Detection)
- Electronics: DAE4 Sn916; Calibrated: 2014/12/29
- Phantom: SAM_Right; Type: QD000P40CC; Serial: TP:1383
- Measurement SW: DASY52, Version 52.8 (8);SEMCAD X Version 14.6.10 (7331)

Configuration/Pin=250mW/Area Scan (61x61x1): Interpolated grid: dx=1.200 mm, dy=1.200 mm
Maximum value of SAR (interpolated) = 19.7 W/kg

Configuration/Pin=250mW/Zoom Scan (7x7x7)/Cube 0: Measurement grid: dx=5mm, dy=5mm, dz=5mm
Reference Value = 112.4 V/m; Power Drift = 0.02 dB
Peak SAR (extrapolated) = 24.5 W/kg
SAR(1 g) = 11.8 W/kg; SAR(10 g) = 5.49 W/kg
Maximum value of SAR (measured) = 19.7 W/kg

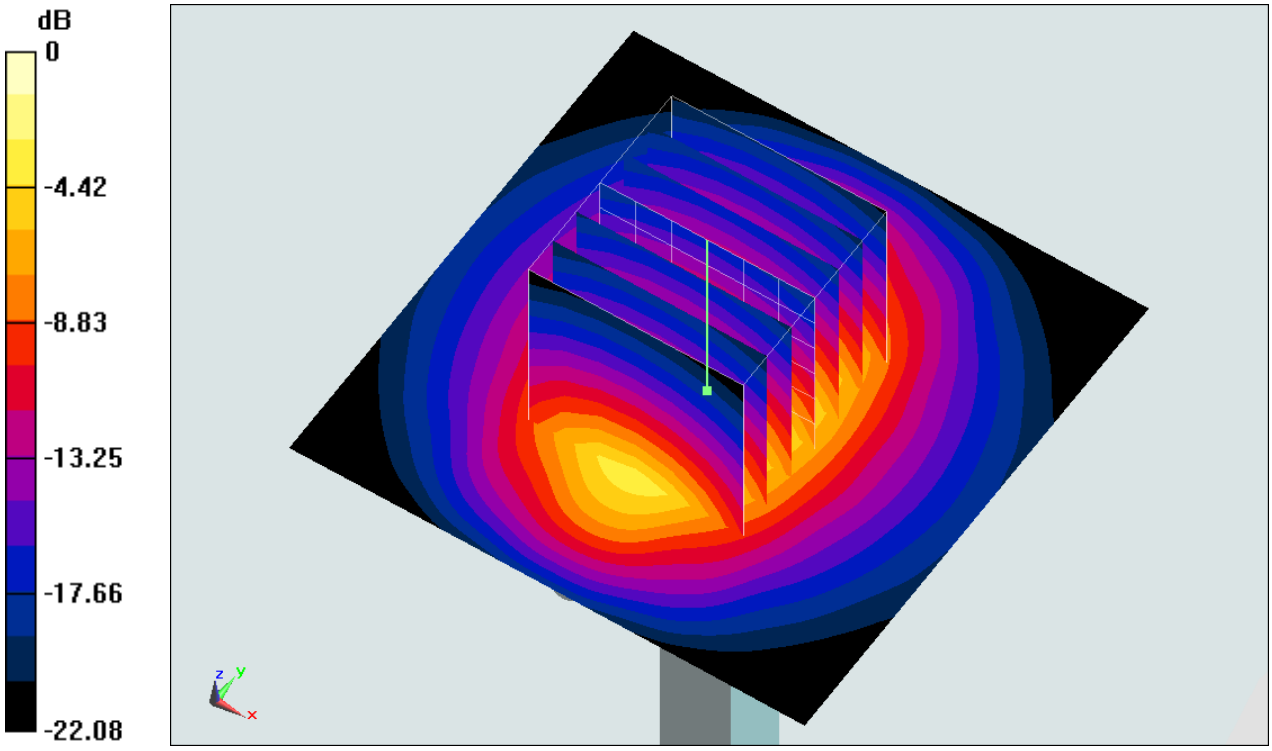

0 dB = 19.7 W/kg = 12.94 dBW/kg

Test Laboratory: Sporton International Inc. SAR/HAC Testing Lab Date: 2015/6/5

System Check_Body_2300MHz_150605

DUT: D2300V2-SN:1006

Communication System: CW; Frequency: 2300 MHz;Duty Cycle: 1:1
Medium: MSL_2300_150605 Medium parameters used: f = 2300 MHz; σ = 1.824 mho/m; ε_r = 53.123; ρ = 1000 kg/m^3
Ambient Temperature：23.3 ℃； Liquid Temperature：22.3 ℃

DASY5 Configuration:
- Probe: EX3DV4 - SN3578; ConvF(7.09, 7.09, 7.09); Calibrated: 2015/3/31;
- Sensor-Surface: 1.4mm (Mechanical Surface Detection)
- Electronics: DAE4 Sn916; Calibrated: 2014/12/29
- Phantom: SAM_Right; Type: QD000P40CC; Serial: TP:1383
- Measurement SW: DASY52, Version 52.8 (2);SEMCAD X Version 14.6.6 (6477)

Configuration/Pin=250mW/Area Scan (81x81x1): Measurement grid: dx=12mm, dy=12mm
Maximum value of SAR (interpolated) = 18.4 mW/g

Configuration/Pin=250mW/Zoom Scan (7x7x7)/Cube 0: Measurement grid: dx=5mm, dy=5mm, dz=5mm
Reference Value = 104.6 V/m; Power Drift = 0.03 dB
Peak SAR (extrapolated) = 24.829 mW/g
SAR(1 g) = 12.2 mW/g; SAR(10 g) = 5.67 mW/g
Maximum value of SAR (measured) = 20.3 mW/g

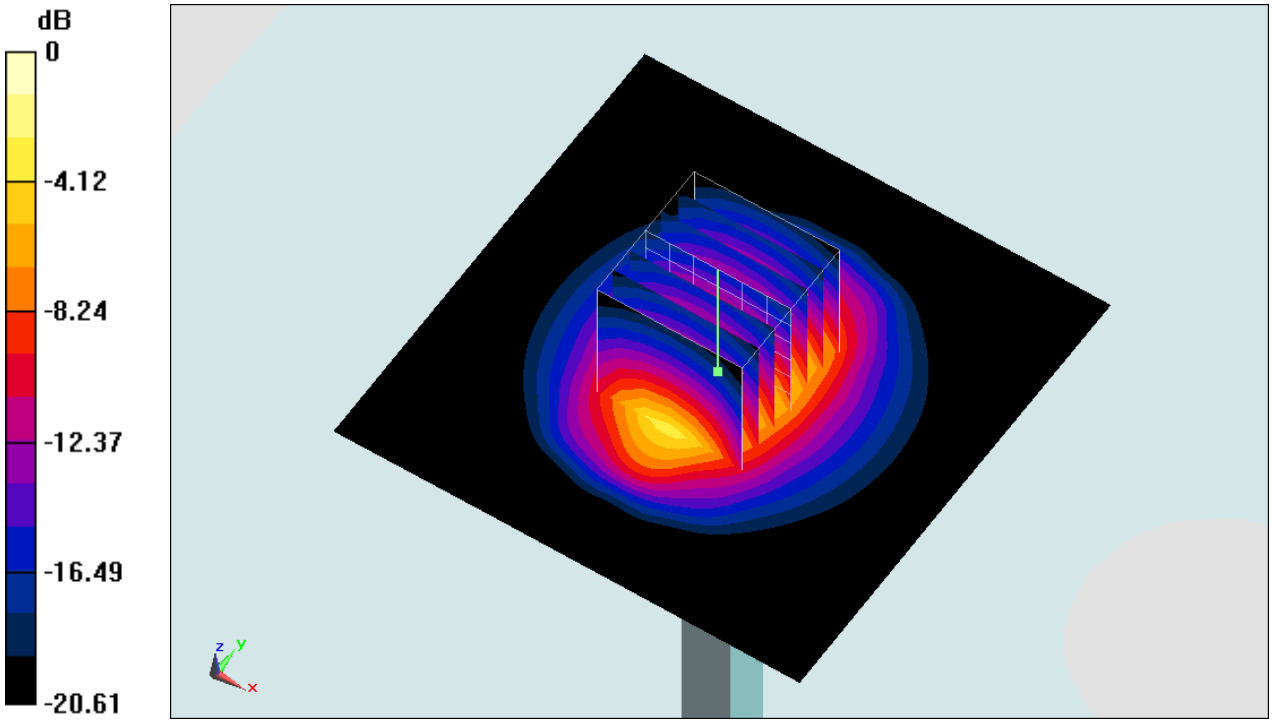

0 dB = 20.3 mW/g = 26.15 dB mW/g

Test Laboratory: Sporton International Inc. SAR/HAC Testing Lab Date: 2015/5/29

System Check_Head_2600MHz_150529

DUT: D2600V2-SN:1070

Communication System: CW; Frequency: 2600 MHz;Duty Cycle: 1:1
Medium: HSL_2600_150529 Medium parameters used: f = 2600 MHz; σ = 2.007 mho/m; ε_r = 37.833; ρ = 1000 kg/m^3
Ambient Temperature：23.4 ℃； Liquid Temperature：22.4 ℃

DASY5 Configuration:
- Probe: EX3DV4 - SN3578; ConvF(6.9, 6.9, 6.9); Calibrated: 2015/3/31;
- Sensor-Surface: 1.4mm (Mechanical Surface Detection)
- Electronics: DAE4 Sn916; Calibrated: 2014/12/29
- Phantom: SAM_Left; Type: QD000P40CD; Serial: TP:1542
- Measurement SW: DASY52, Version 52.8 (2);SEMCAD X Version 14.6.6 (6477)

Configuration/Pin=250mW/Area Scan (81x81x1): Measurement grid: dx=12mm, dy=12mm
Maximum value of SAR (interpolated) = 20.5 mW/g

Configuration/Pin=250mW/Zoom Scan (7x7x7)/Cube 0: Measurement grid: dx=5mm, dy=5mm, dz=5mm
Reference Value = 106.0 V/m; Power Drift = 0.13 dB
Peak SAR (extrapolated) = 27.536 mW/g
SAR(1 g) = 13.7 mW/g; SAR(10 g) = 6.38 mW/g
Maximum value of SAR (measured) = 22.6 mW/g

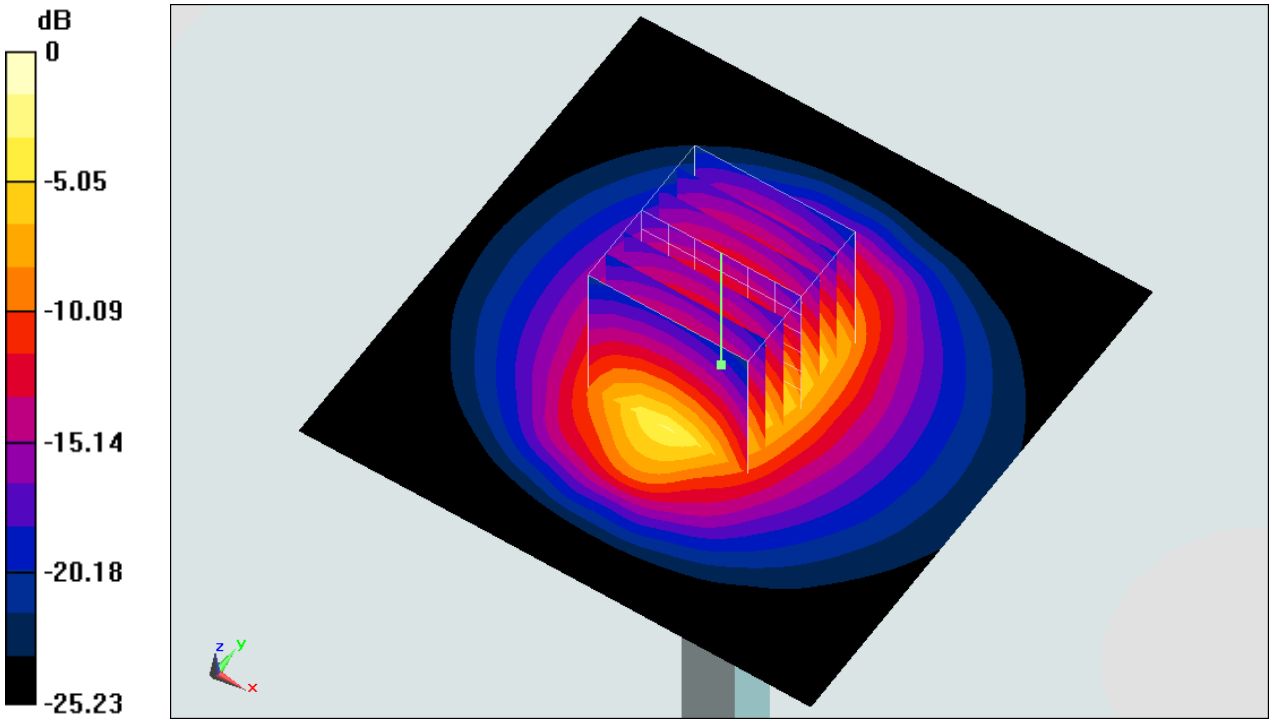

0 dB = 22.6 mW/g = 27.08 dB mW/g

Test Laboratory: Sporton International Inc. SAR/HAC Testing Lab Date: 2015/5/30

System Check_Body_2600MHz_150530

DUT: D2600V2-SN:1070

Communication System: CW; Frequency: 2600 MHz;Duty Cycle: 1:1
Medium: MSL_2600_150530 Medium parameters used: f = 2600 MHz; σ = 2.234 mho/m; ε_r = 51.362; ρ = 1000 kg/m^3
Ambient Temperature：23.5 ℃； Liquid Temperature：22.5 ℃

DASY5 Configuration:
- Probe: EX3DV4 - SN3578; ConvF(6.69, 6.69, 6.69); Calibrated: 2015/3/31;
- Sensor-Surface: 1.4mm (Mechanical Surface Detection)
- Electronics: DAE4 Sn916; Calibrated: 2014/12/29
- Phantom: SAM_Right; Type: QD000P40CC; Serial: TP:1383
- Measurement SW: DASY52, Version 52.8 (2);SEMCAD X Version 14.6.6 (6477)

Configuration/Pin=250mW/Area Scan (71x71x1): Measurement grid: dx=12mm, dy=12mm
Maximum value of SAR (interpolated) = 23.8 mW/g

Configuration/Pin=250mW/Zoom Scan (7x7x7)/Cube 0: Measurement grid: dx=5mm, dy=5mm, dz=5mm
Reference Value = 104.1 V/m; Power Drift = 0.17 dB
Peak SAR (extrapolated) = 29.981 mW/g
SAR(1 g) = 13.9 mW/g; SAR(10 g) = 6.16 mW/g
Maximum value of SAR (measured) = 23.7 mW/g

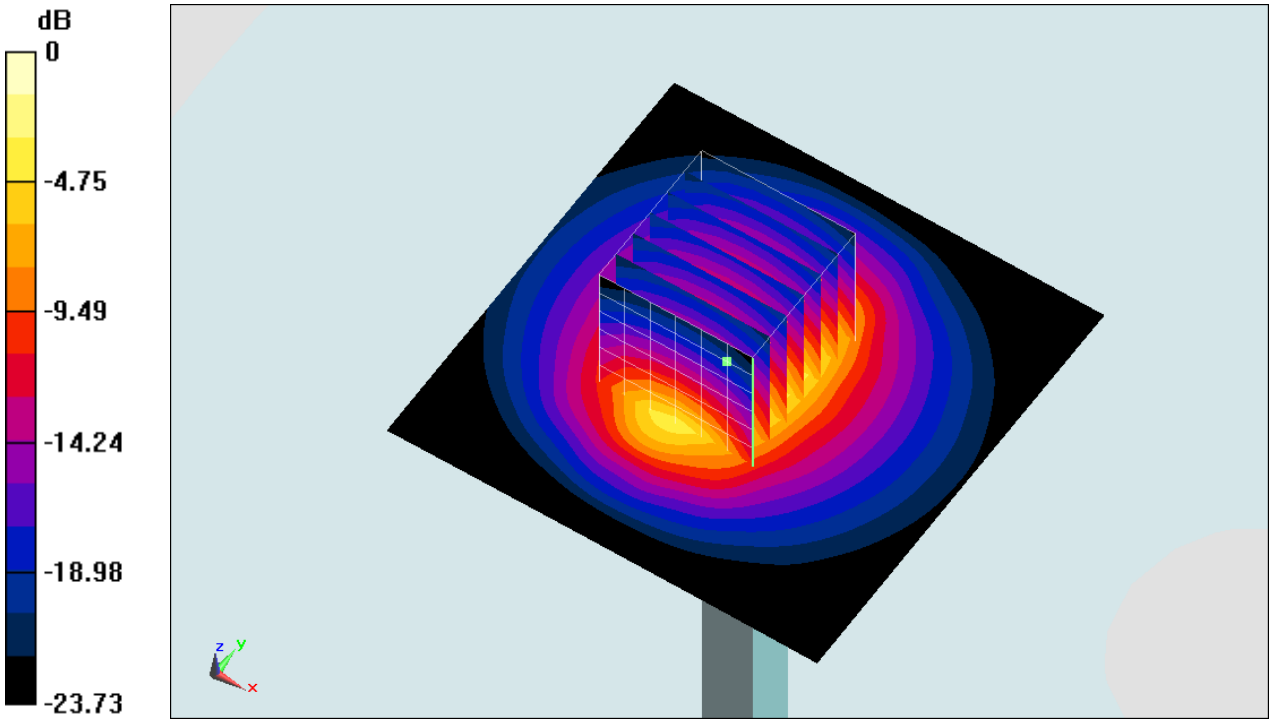

0 dB = 23.7 mW/g = 27.49 dB mW/g

Test Laboratory: Sporton International Inc. SAR/HAC Testing Lab Date: 2015.06.06

System Check_Head_2450MHz_150606

DUT: D2450V2 - SN:840

Communication System: CW; Frequency: 2450 MHz;Duty Cycle: 1:1
Medium: HSL_2450_150606 Medium parameters used: f = 2450 MHz; σ = 1.817 mho/m; ε_r = 39.204; ρ = 1000 kg/m^3
Ambient Temperature：23.5 ℃； Liquid Temperature：22.8 ℃

DASY5 Configuration:
- Probe: EX3DV4 - SN3801; ConvF(6.85, 6.85, 6.85); Calibrated: 2014.06.18
- Sensor-Surface: 2mm (Mechanical Surface Detection)
- Electronics: DAE4 Sn905; Calibrated: 2014.07.14
- Phantom: SAM2; Type: SAM; Serial: TP-1477
- Measurement SW: DASY52, Version 52.8 (8); SEMCAD X Version 14.4.5 (3634)

Pin=250mW/Area Scan (71x71x1): Measurement grid: dx=12mm, dy=12mm
Maximum value of SAR (interpolated) = 20.645 mW/g

Pin=250mW/Zoom Scan (7x7x7)/Cube 0: Measurement grid: dx=5mm, dy=5mm, dz=5mm
Reference Value = 84.517 V/m; Power Drift = -0.10 dB
Peak SAR (extrapolated) = 29.094 W/kg
SAR(1 g) = 13.2 mW/g; SAR(10 g) = 5.91 mW/g
Maximum value of SAR (measured) = 20.745 mW/g

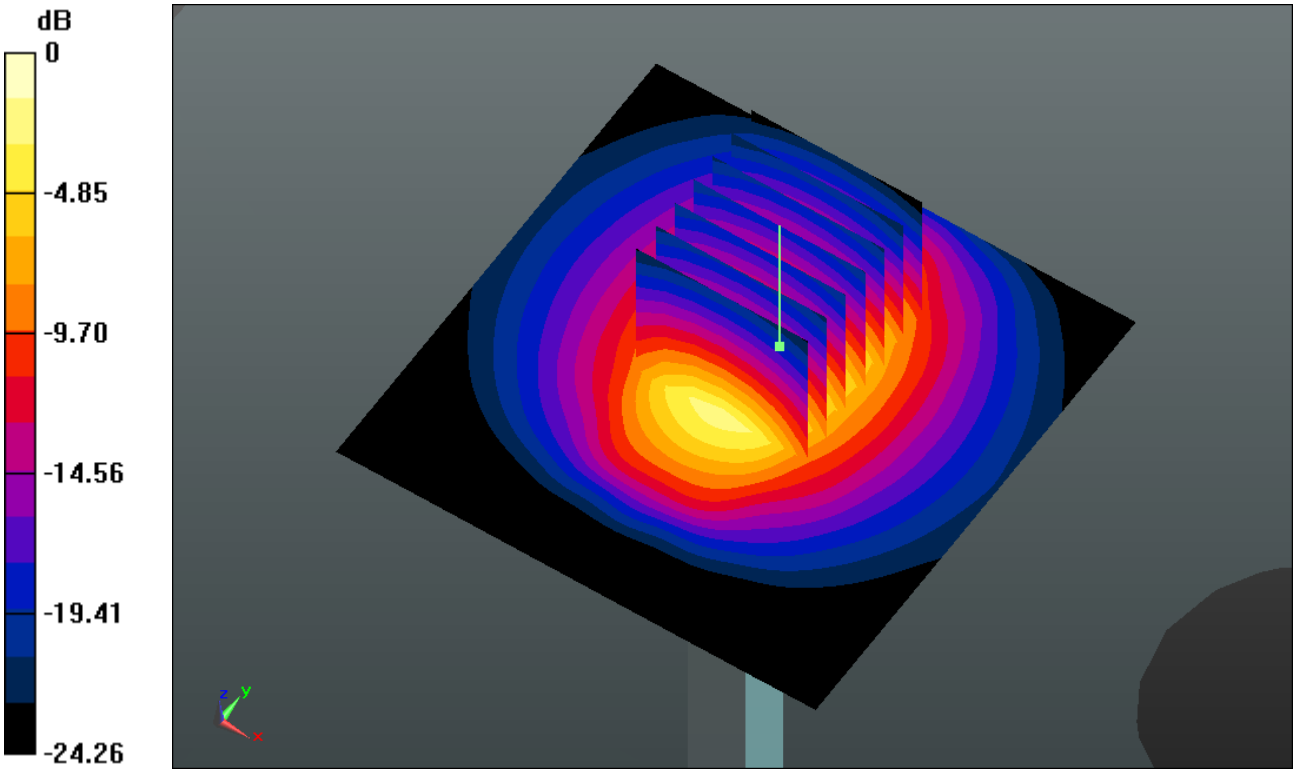

0 dB = 20.740mW/g

Test Laboratory: Sporton International Inc. SAR/HAC Testing Lab Date: 2015.06.06

System Check_Body_2450MHz_150606

DUT: D2450V2 - SN:840

Communication System: CW; Frequency: 2450 MHz;Duty Cycle: 1:1
Medium: MSL_2450_150606 Medium parameters used: f = 2450 MHz; σ = 1.943 mho/m; ε_r = 51.453; ρ = 1000 kg/m^3
Ambient Temperature：23.5 ℃； Liquid Temperature：22.5 ℃

DASY5 Configuration:
- Probe: EX3DV4 - SN3801; ConvF(6.85, 6.85, 6.85); Calibrated: 2014.06.18
- Sensor-Surface: 2mm (Mechanical Surface Detection)
- Electronics: DAE4 Sn905; Calibrated: 2014.07.14
- Phantom: SAM1; Type: SAM; Serial: TP-1479
- Measurement SW: DASY52, Version 52.8 (8); SEMCAD X Version 14.4.5 (3634)

Pin=250mW/Area Scan (81x81x1): Measurement grid: dx=12mm, dy=12mm
Maximum value of SAR (interpolated) = 19.236 mW/g

Pin=250mW/Zoom Sc (7x7x7)/Cube 0: Measurement grid: dx=5mm, dy=5mm, dz=5mm
Reference Value = 85.884 V/m; Power Drift = 0.0043 dB
Peak SAR (extrapolated) = 26.134 W/kg
SAR(1 g) = 12.5 mW/g; SAR(10 g) = 5.74 mW/g
Maximum value of SAR (measured) = 19.294 mW/g

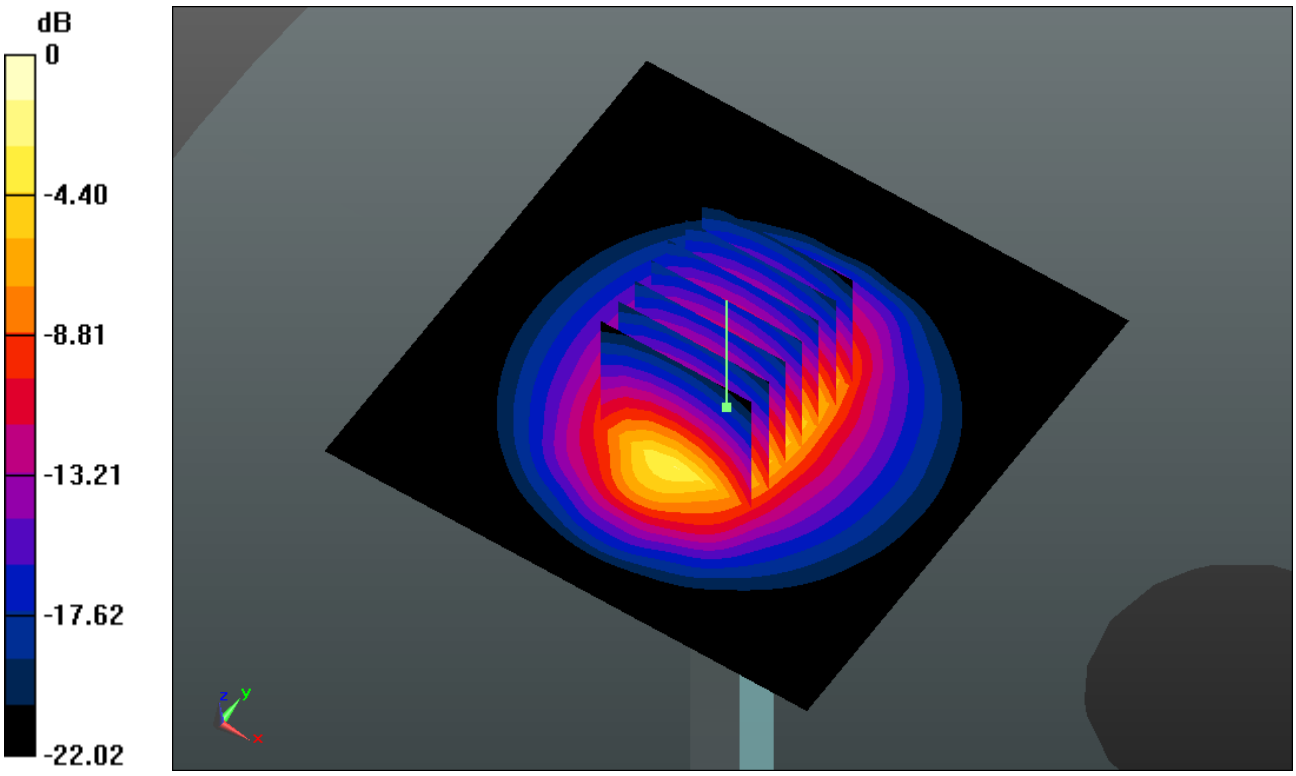

0 dB = 19.290mW/g

Test Laboratory: Sporton International Inc. SAR/HAC Testing Lab Date: 2015.06.12

System Check_Head_5200MHz_150612

DUT: D5GHzV2-SN:1113

Communication System: CW; Frequency: 5200 MHz;Duty Cycle: 1:1
Medium: HSL_5000_150612 Medium parameters used: f = 5200 MHz; σ = 4.793 mho/m; ε_r = 35.493; ρ = 1000 kg/m^3
Ambient Temperature：23.4 ℃； Liquid Temperature：22.7 ℃

DASY5 Configuration:
- Probe: EX3DV4 - SN7350; ConvF(4.6, 4.6, 4.6); Calibrated: 2015.01.08
- Sensor-Surface: 1.4mm (Mechanical Surface Detection)
- Electronics: DAE4 Sn905; Calibrated: 2014.07.14
- Phantom: SAM2; Type: SAM; Serial: TP-1477
- Measurement SW: DASY52, Version 52.8 (8); SEMCAD X Version 14.4.5 (3634)

Pin=100mW/Area Scan (71x71x1): Measurement grid: dx=10mm, dy=10mm
Maximum value of SAR (interpolated) = 19.165 mW/g

Pin=100mW/Zoom Scan (8x8x7)/Cube 0: Measurement grid: dx=4mm, dy=4mm, dz=1.4mm
Reference Value = 43.743 V/m; Power Drift = -0.15 dB
Peak SAR (extrapolated) = 33.779 W/kg
SAR(1 g) = 8.01 mW/g; SAR(10 g) = 2.3 mW/g
Maximum value of SAR (measured) = 18.797 mW/g

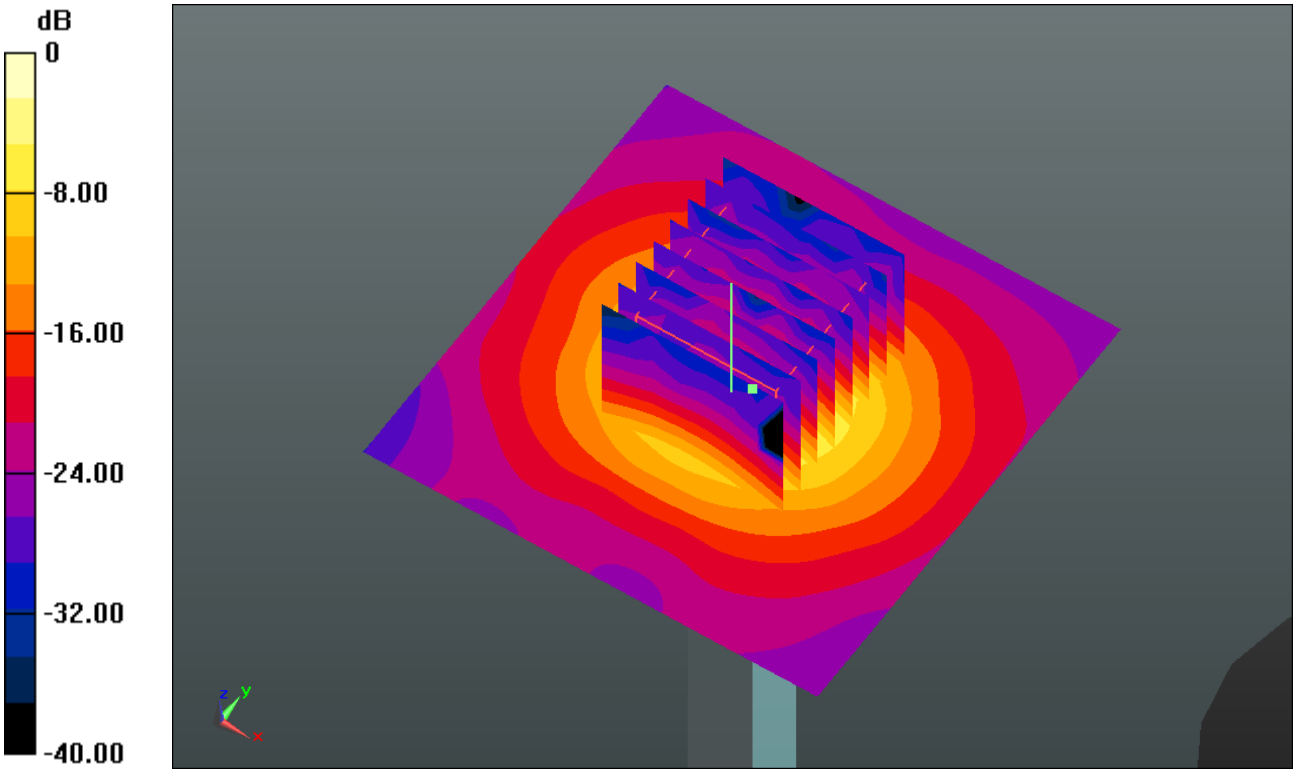

0 dB = 18.800mW/g

Test Laboratory: Sporton International Inc. SAR/HAC Testing Lab Date: 2015.06.14

System Check_Body_5200MHz_150614

DUT: D5GHzV2-SN:1113

Communication System: CW; Frequency: 5200 MHz;Duty Cycle: 1:1
Medium: MSL_5000_150614 Medium parameters used: f = 5200 MHz; σ = 5.162 mho/m; ε_r = 48.492; ρ = 1000 kg/m^3
Ambient Temperature：23.6 ℃； Liquid Temperature：22.6 ℃

DASY5 Configuration:
- Probe: EX3DV4 - SN7350; ConvF(4.6, 4.6, 4.6); Calibrated: 2015.01.08
- Sensor-Surface: 1.4mm (Mechanical Surface Detection)
- Electronics: DAE4 Sn905; Calibrated: 2014.07.14
- Phantom: SAM1; Type: SAM; Serial: TP-1479
- Measurement SW: DASY52, Version 52.8 (8); SEMCAD X Version 14.4.5 (3634)

Pin=100mW/Area Scan (71x71x1): Measurement grid: dx=10mm, dy=10mm
Maximum value of SAR (interpolated) = 16.770 mW/g

Pin=100mW/Zoom Scan (8x8x7)/Cube 0: Measurement grid: dx=4mm, dy=4mm, dz=1.4mm
Reference Value = 39.914 V/m; Power Drift = 0.04 dB
Peak SAR (extrapolated) = 30.355 W/kg
SAR(1 g) = 7.06 mW/g; SAR(10 g) = 1.98 mW/g
Maximum value of SAR (measured) = 16.629 mW/g

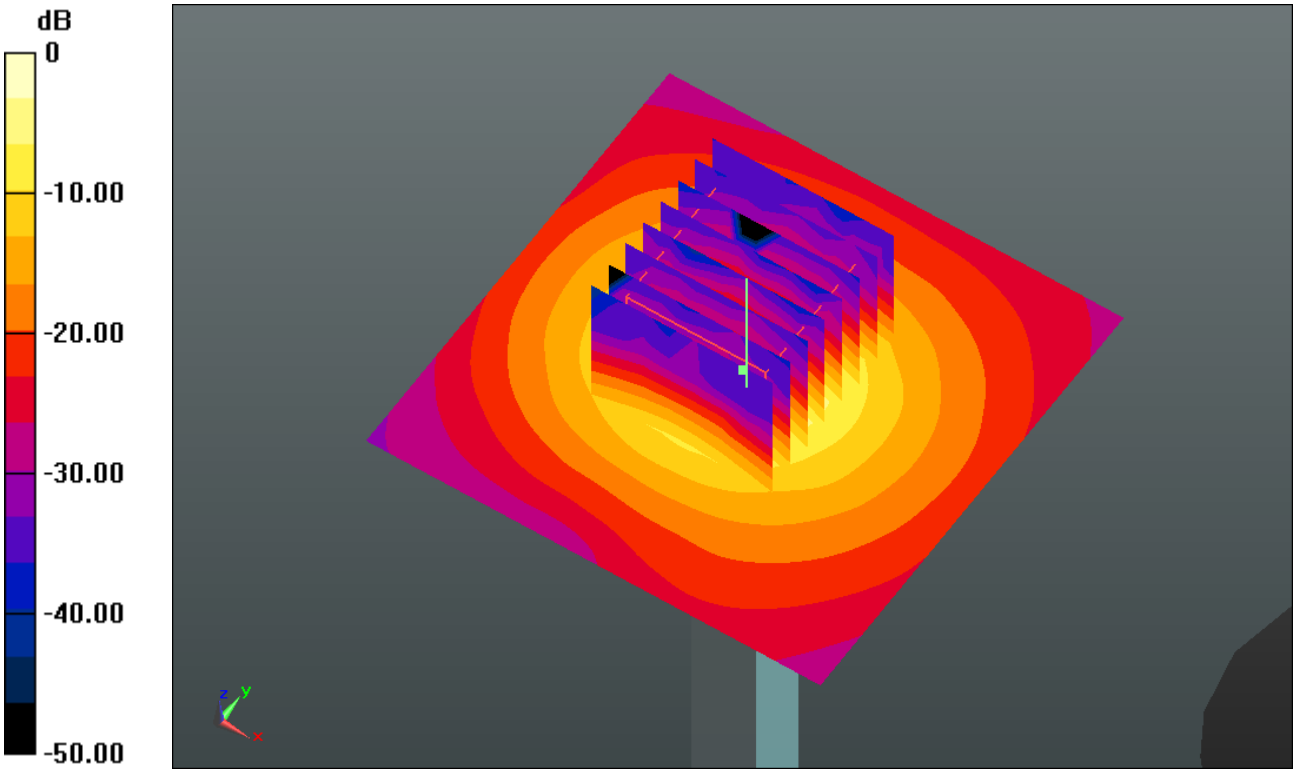

0 dB = 16.630mW/g

Test Laboratory: Sporton International Inc. SAR/HAC Testing Lab Date: 2015.06.12

System Check_Head_5800MHz_150612

DUT: D5GHzV2-SN:1113

Communication System: CW; Frequency: 5800 MHz;Duty Cycle: 1:1
Medium: HSL_5000_150612 Medium parameters used: f = 5800 MHz; σ = 5.395 mho/m; ε_r = 34.416; ρ = 1000 kg/m^3
Ambient Temperature：23.4 ℃； Liquid Temperature：22.7 ℃

DASY5 Configuration:
- Probe: EX3DV4 - SN7350; ConvF(4.6, 4.6, 4.6); Calibrated: 2015.01.08
- Sensor-Surface: 1.4mm (Mechanical Surface Detection)
- Electronics: DAE4 Sn905; Calibrated: 2014.07.14
- Phantom: SAM2; Type: SAM; Serial: TP-1477
- Measurement SW: DASY52, Version 52.8 (8); SEMCAD X Version 14.4.5 (3634)

Pin=100mW/Area Scan (71x71x1): Measurement grid: dx=10mm, dy=10mm
Maximum value of SAR (interpolated) = 19.172 mW/g

Pin=100mW/Zoom Scan (8x8x7)/Cube 0: Measurement grid: dx=4mm, dy=4mm, dz=1.4mm
Reference Value = 39.166 V/m; Power Drift = -0.17 dB
Peak SAR (extrapolated) = 35.851 W/kg
SAR(1 g) = 7.7 mW/g; SAR(10 g) = 2.19 mW/g
Maximum value of SAR (measured) = 18.763 mW/g

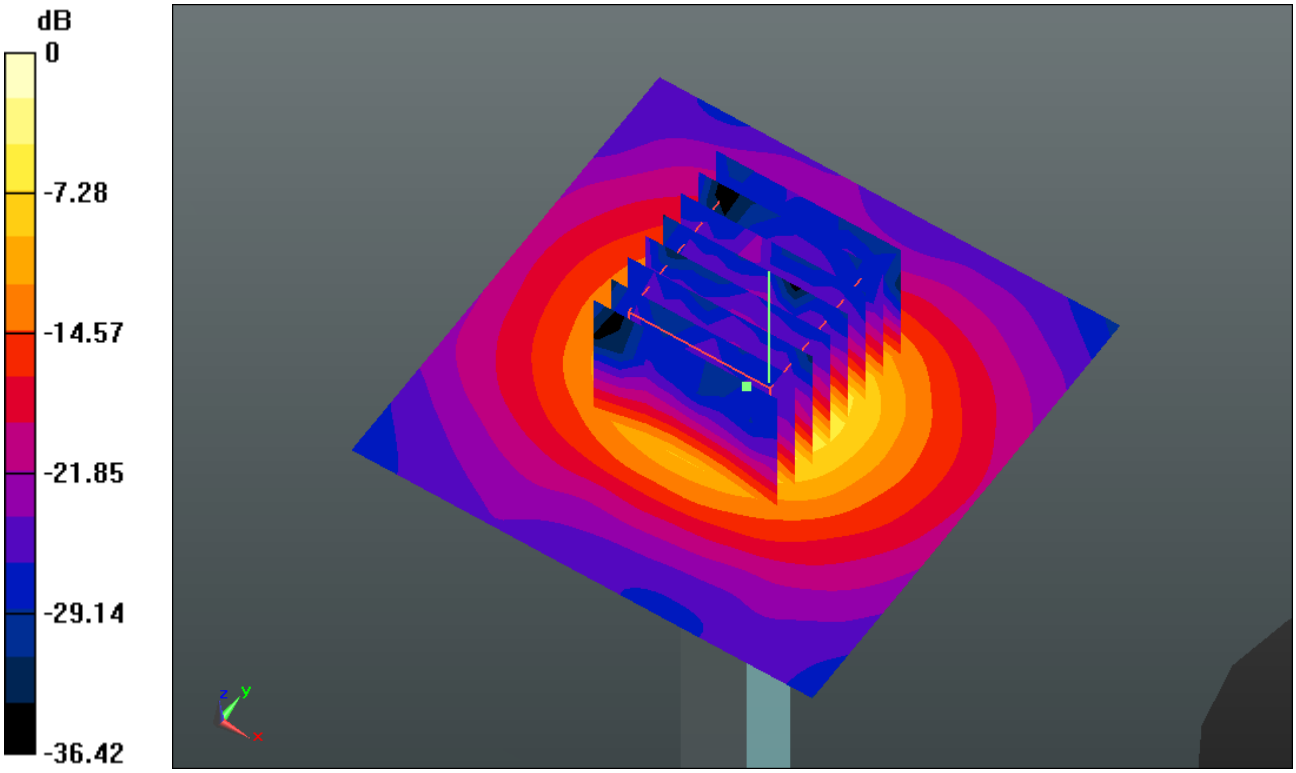

0 dB = 18.760mW/g

Test Laboratory: Sporton International Inc. SAR/HAC Testing Lab Date: 2015.06.14

System Check_Body_5800MHz_150614

DUT: D5GHzV2-SN:1113

Communication System: CW; Frequency: 5800 MHz;Duty Cycle: 1:1
Medium: MSL_5000_150614 Medium parameters used: f = 5800 MHz; σ = 5.976 mho/m; ε_r = 47.158; ρ = 1000 kg/m^3
Ambient Temperature：23.6 ℃； Liquid Temperature：22.6 ℃

DASY5 Configuration:
- Probe: EX3DV4 - SN7350; ConvF(4.6, 4.6, 4.6); Calibrated: 2015.01.08
- Sensor-Surface: 1.4mm (Mechanical Surface Detection)
- Electronics: DAE4 Sn905; Calibrated: 2014.07.14
- Phantom: SAM1; Type: SAM; Serial: TP-1479
- Measurement SW: DASY52, Version 52.8 (8); SEMCAD X Version 14.4.5 (3634)

Pin=100mW/Area Scan (71x71x1): Measurement grid: dx=10mm, dy=10mm
Maximum value of SAR (interpolated) = 17.847 mW/g

Pin=100mW/Zoom Scan (8x8x7)/Cube 0: Measurement grid: dx=4mm, dy=4mm, dz=1.4mm
Reference Value = 35.625 V/m; Power Drift = 0.004 dB
Peak SAR (extrapolated) = 35.455 W/kg
SAR(1 g) = 7.04 mW/g; SAR(10 g) = 1.95 mW/g
Maximum value of SAR (measured) = 17.505 mW/g

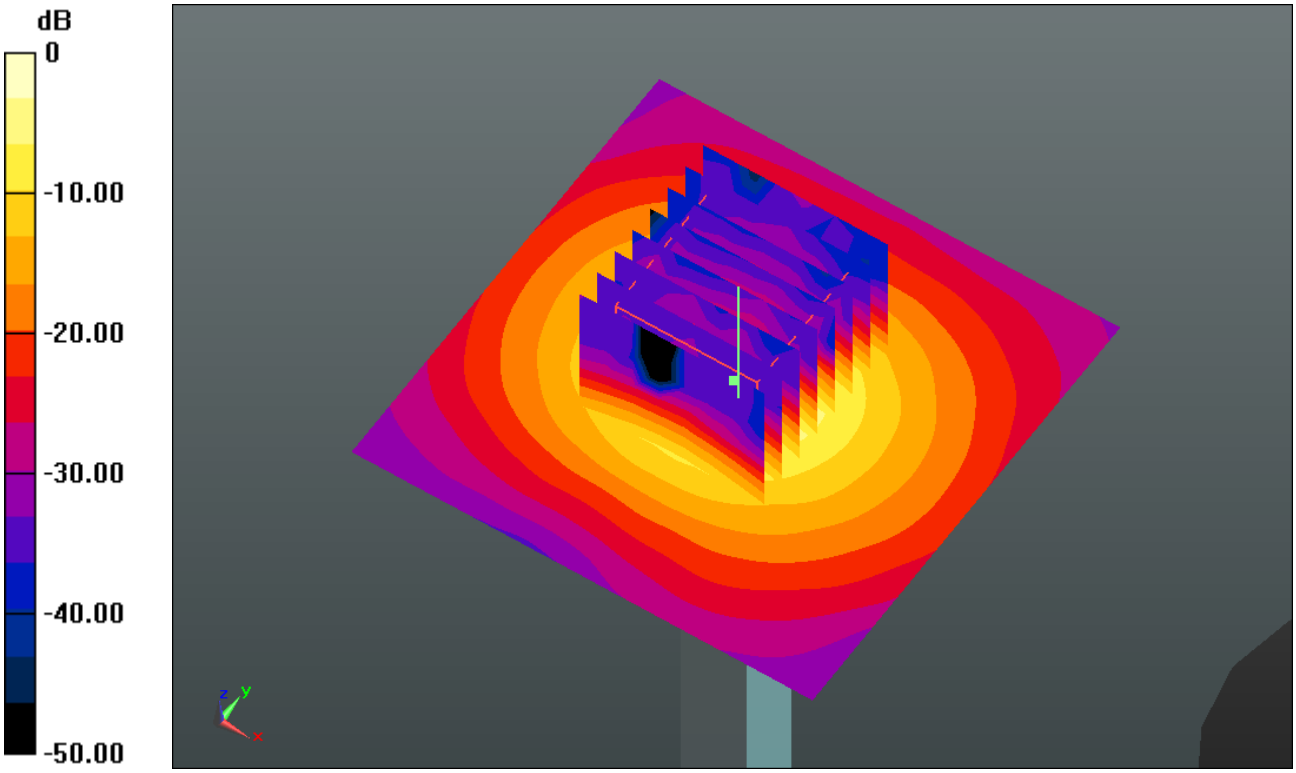

0 dB = 17.510mW/g

Appendix B. Plots of High SAR Measurement

The plots are shown as follows.

Test Laboratory: Sporton International Inc. SAR/HAC Testing Lab Date: 2015/6/3

#01_GSM850_GPRS (2 Tx slots)_Right Cheek_Ch128

Communication System: GSM850; Frequency: 824.2 MHz;Duty Cycle: 1:4.15
Medium: HSL_850_150603 Medium parameters used: f = 824.2 MHz; σ = 0.886 mho/m; ε_r = 42.023; ρ = 1000 kg/m^3
Ambient Temperature：23.3 ℃； Liquid Temperature：22.3 ℃

DASY5 Configuration:
- Probe: ES3DV3 - SN3270; ConvF(6.43, 6.43, 6.43); Calibrated: 2014/9/26;
- Sensor-Surface: 2mm (Mechanical Surface Detection)
- Electronics: DAE4 Sn778; Calibrated: 2014/8/21
- Phantom: SAM_Left; Type: QD000P40CD; Serial: TP:1542
- Measurement SW: DASY52, Version 52.8 (2);SEMCAD X Version 14.6.6 (6477)

Configuration/Ch128/Area Scan (71x121x1): Measurement grid: dx=15mm, dy=15mm
Maximum value of SAR (interpolated) = 0.451 mW/g

Configuration/Ch128/Zoom Scan (5x5x7)/Cube 0: Measurement grid: dx=8mm, dy=8mm, dz=5mm
Reference Value = 22.737 V/m; Power Drift = -0.11 dB
Peak SAR (extrapolated) = 0.474 mW/g
SAR(1 g) = 0.374 mW/g; SAR(10 g) = 0.290 mW/g
Maximum value of SAR (measured) = 0.438 mW/g

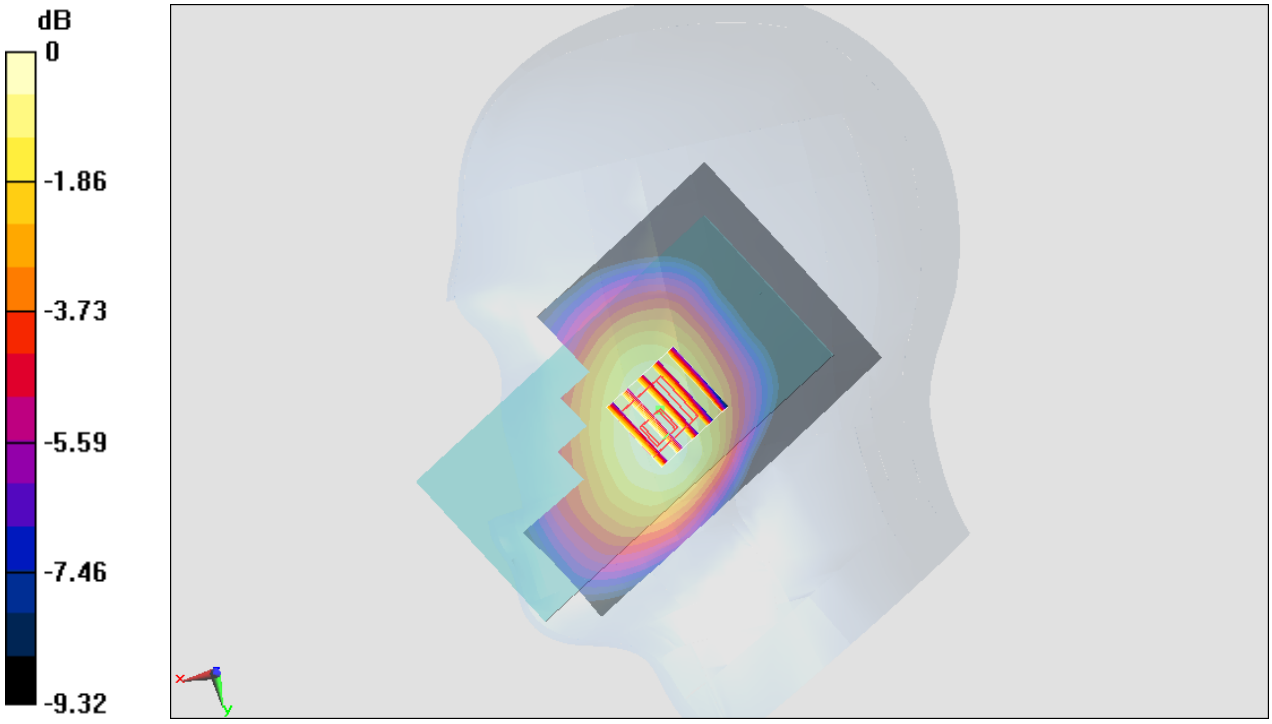

0 dB = 0.438 mW/g = -7.17 dB mW/g

#02_GSM1900_GPRS (2 Tx Slots)_Right Cheek_Ch810

Communication System: PCS; Frequency: 1909.8 MHz;Duty Cycle: 1:4.15
Medium: HSL_1900_150601 Medium parameters used: f = 1909.8 MHz; σ = 1.419 mho/m; ε_r = 39.969; ρ = 1000 kg/m^3
Ambient Temperature：23.3 ℃； Liquid Temperature：22.3 ℃

DASY5 Configuration:
- Probe: EX3DV4 - SN3697; ConvF(7.71, 7.71, 7.71); Calibrated: 2014/9/29;
- Sensor-Surface: 1.4mm (Mechanical Surface Detection)
- Electronics: DAE4 Sn1388; Calibrated: 2014/9/24
- Phantom: SAM_Left; Type: QD000P40CD; Serial: TP:1542
- Measurement SW: DASY52, Version 52.8 (2);SEMCAD X Version 14.6.6 (6477)

Configuration/Ch810/Area Scan (71x121x1): Measurement grid: dx=15mm, dy=15mm
Maximum value of SAR (interpolated) = 0.743 mW/g

Configuration/Ch810/Zoom Scan (5x5x7)/Cube 0: Measurement grid: dx=8mm, dy=8mm, dz=5mm
Reference Value = 11.055 V/m; Power Drift = -0.07 dB
Peak SAR (extrapolated) = 0.321 mW/g
SAR(1 g) = 0.095 mW/g; SAR(10 g) = 0.033 mW/g
Maximum value of SAR (measured) = 0.217 mW/g

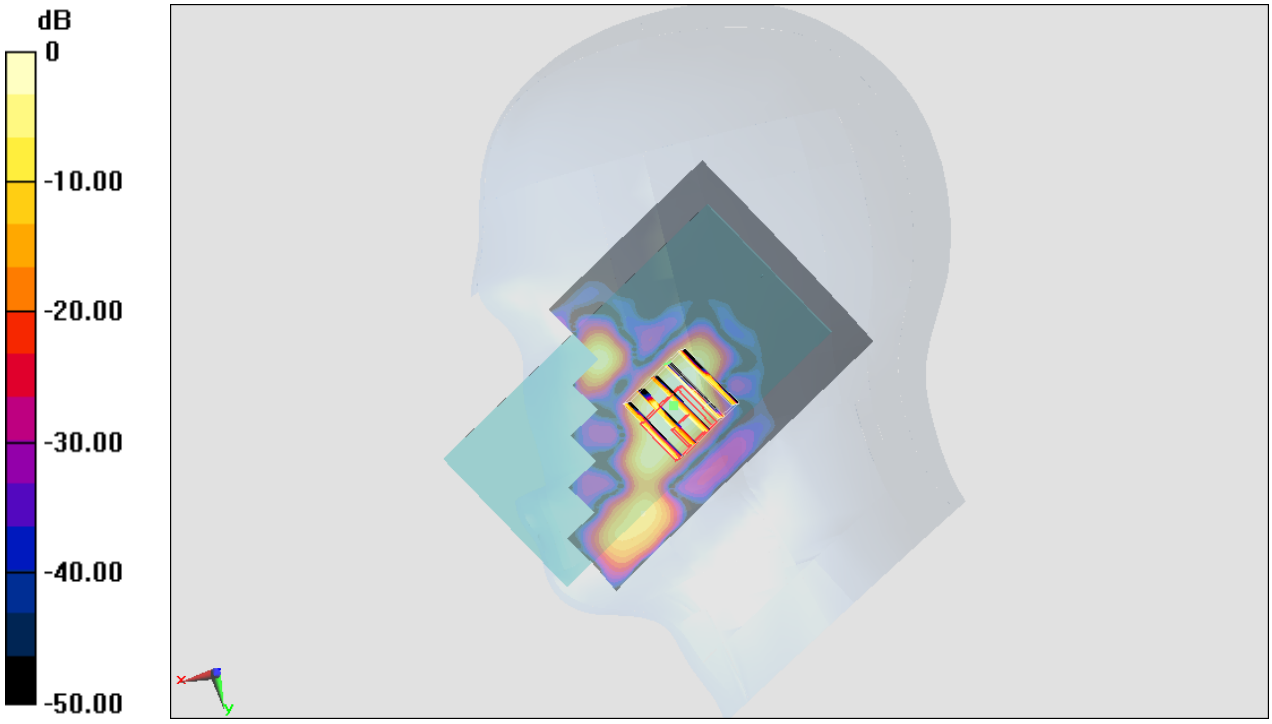

0 dB = 0.217 mW/g = -13.27 dB mW/g

Test Laboratory: Sporton International Inc. SAR/HAC Testing Lab Date: 2015/6/3

#03_WCDMA Band V_RMC 12.2Kbps_Right Cheek_Ch4233

Communication System: WCDMA; Frequency: 846.6 MHz;Duty Cycle: 1:1
Medium: HSL_850_150603 Medium parameters used: f = 846.6 MHz; σ = 0.908 mho/m; ε_r = 41.744; ρ = 1000 kg/m^3
Ambient Temperature：23.3 ℃； Liquid Temperature：22.3 ℃

DASY5 Configuration:
- Probe: ES3DV3 - SN3270; ConvF(6.43, 6.43, 6.43); Calibrated: 2014/9/26;
- Sensor-Surface: 2mm (Mechanical Surface Detection)
- Electronics: DAE4 Sn778; Calibrated: 2014/8/21
- Phantom: SAM_Left; Type: QD000P40CD; Serial: TP:1542
- Measurement SW: DASY52, Version 52.8 (2);SEMCAD X Version 14.6.6 (6477)

Configuration/Ch4233/Area Scan (71x121x1): Measurement grid: dx=15mm, dy=15mm
Maximum value of SAR (interpolated) = 0.303 mW/g

Configuration/Ch4233/Zoom Scan (5x5x7)/Cube 0: Measurement grid: dx=8mm, dy=8mm, dz=5mm
Reference Value = 18.726 V/m; Power Drift = -0.05 dB
Peak SAR (extrapolated) = 0.355 mW/g
SAR(1 g) = 0.244 mW/g; SAR(10 g) = 0.183 mW/g
Maximum value of SAR (measured) = 0.290 mW/g

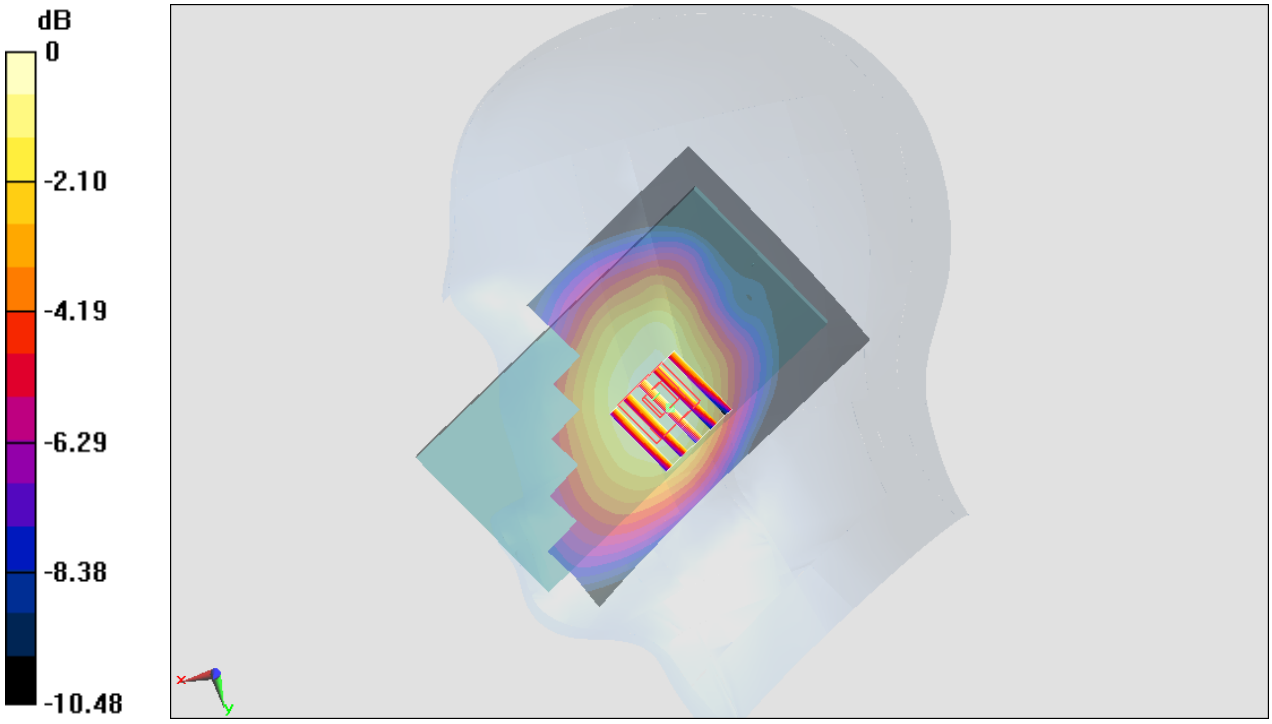

0 dB = 0.290 mW/g = -10.75 dB mW/g

Test Laboratory: Sporton International Inc. SAR/HAC Testing Lab Date: 2015/6/2

#04_WCDMA Band IV_RMC 12.2Kbps_Right Cheek_Ch1312

Communication System: WCDMA; Frequency: 1712.4 MHz;Duty Cycle: 1:1
Medium: HSL_1750_150602 Medium parameters used: f = 1712.4 MHz; σ = 1.334 mho/m; ε_r = 39.909; ρ = 1000 kg/m^3
Ambient Temperature：23.7 ℃； Liquid Temperature：22.7 ℃

DASY5 Configuration:
- Probe: EX3DV4 - SN3697; ConvF(7.98, 7.98, 7.98); Calibrated: 2014/9/29;
- Sensor-Surface: 1.4mm (Mechanical Surface Detection)
- Electronics: DAE4 Sn1388; Calibrated: 2014/9/24
- Phantom: SAM_Left; Type: QD000P40CD; Serial: TP:1542
- Measurement SW: DASY52, Version 52.8 (2);SEMCAD X Version 14.6.6 (6477)

Configuration/Ch1312/Area Scan (71x121x1): Measurement grid: dx=15mm, dy=15mm
Maximum value of SAR (interpolated) = 0.566 mW/g

Configuration/Ch1312/Zoom Scan (5x5x7)/Cube 0: Measurement grid: dx=8mm, dy=8mm, dz=5mm
Reference Value = 15.757 V/m; Power Drift = 0.04 dB
Peak SAR (extrapolated) = 0.472 mW/g
SAR(1 g) = 0.308 mW/g; SAR(10 g) = 0.171 mW/g
Maximum value of SAR (measured) = 0.467 mW/g

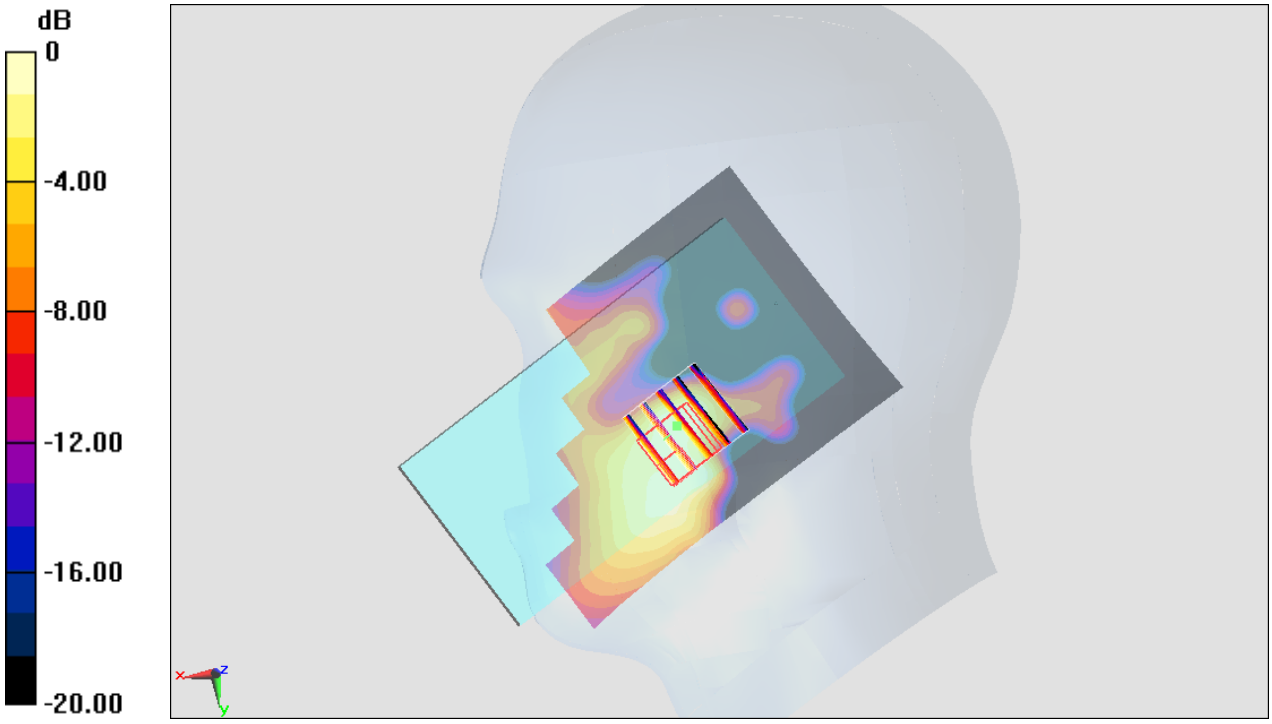

0 dB = 0.467 mW/g = -6.61 dB mW/g

#05_WCDMA Band II_RMC 12.2Kbps_Right Cheek_Ch9262

Communication System: WCDMA; Frequency: 1852.4 MHz;Duty Cycle: 1:1
Medium: HSL_1900_150601 Medium parameters used: f = 1852.4 MHz; σ = 1.357 mho/m; ε_r = 40.194; ρ = 1000 kg/m^3
Ambient Temperature：23.3 ℃； Liquid Temperature：22.3 ℃

DASY5 Configuration:
- Probe: EX3DV4 - SN3697; ConvF(7.71, 7.71, 7.71); Calibrated: 2014/9/29;
- Sensor-Surface: 1.4mm (Mechanical Surface Detection)
- Electronics: DAE4 Sn1388; Calibrated: 2014/9/24
- Phantom: SAM_Left; Type: QD000P40CD; Serial: TP:1542
- Measurement SW: DASY52, Version 52.8 (2);SEMCAD X Version 14.6.6 (6477)

Configuration/Ch9262/Area Scan (71x121x1): Measurement grid: dx=15mm, dy=15mm
Maximum value of SAR (interpolated) = 0.417 mW/g

Configuration/Ch9262/Zoom Scan (5x5x7)/Cube 0: Measurement grid: dx=8mm, dy=8mm, dz=5mm
Reference Value = 16.410 V/m; Power Drift = -0.05 dB
Peak SAR (extrapolated) = 0.784 mW/g
SAR(1 g) = 0.166 mW/g; SAR(10 g) = 0.065 mW/g
Maximum value of SAR (measured) = 0.383 mW/g

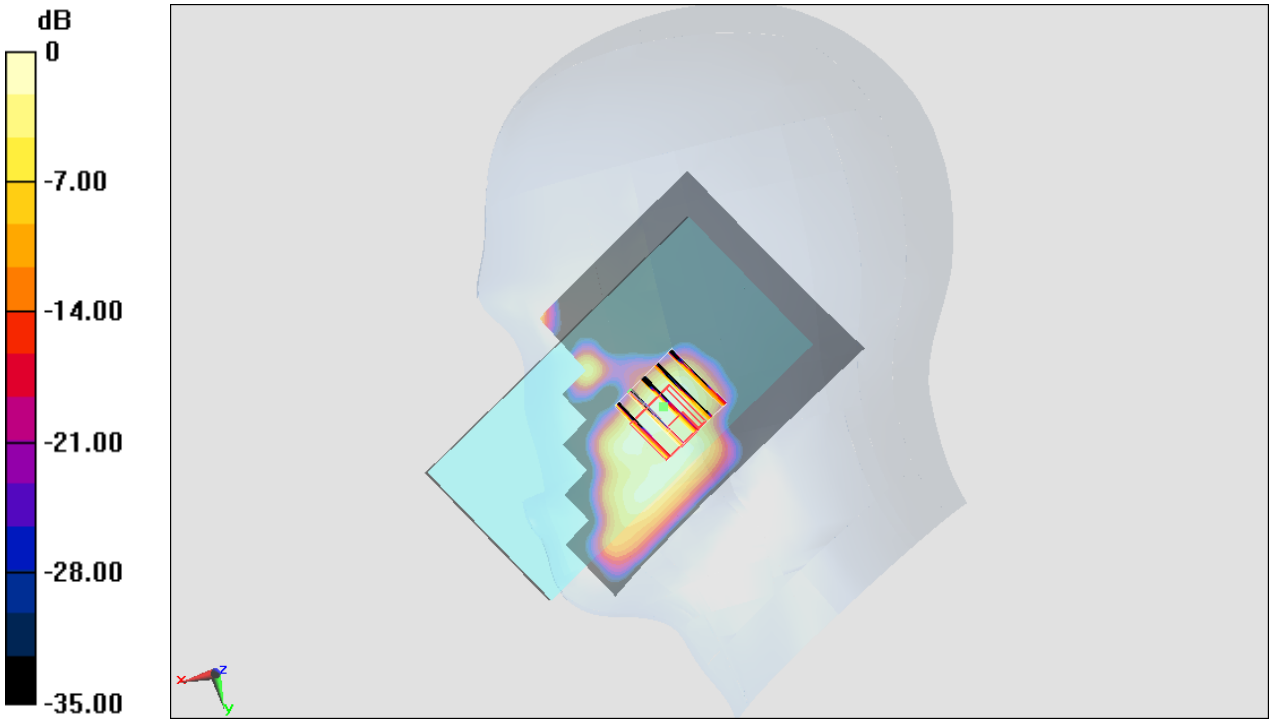

0 dB = 0.383 mW/g = -8.34 dB mW/g

Test Laboratory: Sporton International Inc. SAR/HAC Testing Lab Date: 2015/6/4

#06_LTE Band 12_10M_QPSK_1RB_0offset_Right Cheek_Ch23095

Communication System: LTE; Frequency: 707.5 MHz;Duty Cycle: 1:1
Medium: HSL_750_150604 Medium parameters used: f = 707.5 MHz; σ = 0.858 mho/m; ε_r = 43.682; ρ = 1000 kg/m^3
Ambient Temperature：23.3 ℃； Liquid Temperature：22.3 ℃

DASY5 Configuration:
- Probe: EX3DV4 - SN3954; ConvF(10.93, 10.93, 10.93); Calibrated: 2014/11/21;
- Sensor-Surface: 1.4mm (Mechanical Surface Detection)
- Electronics: DAE4 Sn1279; Calibrated: 2014/7/23
- Phantom: SAM_Left; Type: QD000P40CD; Serial: TP:1542
- Measurement SW: DASY52, Version 52.8 (2);SEMCAD X Version 14.6.6 (6477)

Configuration/Ch23095/Area Scan (71x121x1): Measurement grid: dx=15mm, dy=15mm
Maximum value of SAR (interpolated) = 0.164 mW/g

Configuration/Ch23095/Zoom Scan (5x5x7)/Cube 0: Measurement grid: dx=8mm, dy=8mm, dz=5mm
Reference Value = 14.122 V/m; Power Drift = -0.06 dB
Peak SAR (extrapolated) = 0.173 mW/g
SAR(1 g) = 0.143 mW/g; SAR(10 g) = 0.117 mW/g
Maximum value of SAR (measured) = 0.163 mW/g

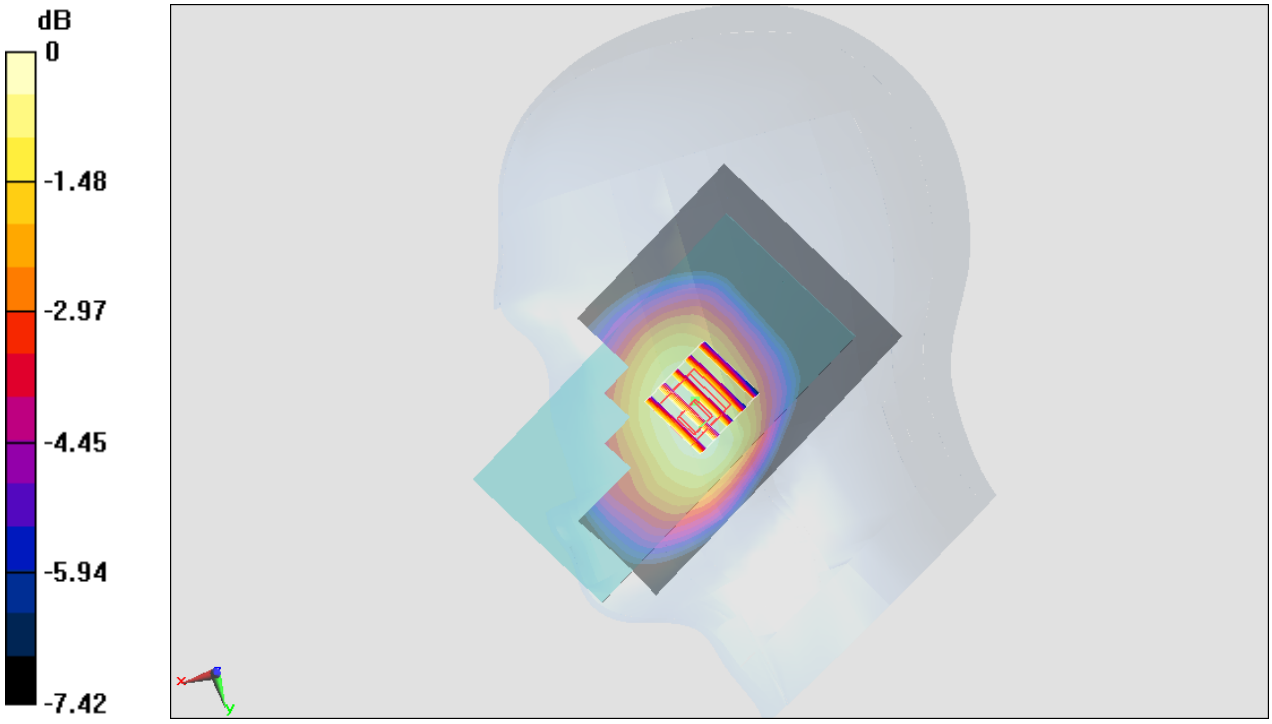

0 dB = 0.163 mW/g = -15.76 dB mW/g

Test Laboratory: Sporton International Inc. SAR/HAC Testing Lab Date: 2015/6/4

#07_LTE Band 17_10M_QPSK_1RB_0offset_Right Cheek_Ch23790

Communication System: LTE; Frequency: 710 MHz;Duty Cycle: 1:1
Medium: HSL_750_150604 Medium parameters used: f = 710 MHz; σ = 0.86 mho/m; ε_r = 43.654; ρ = 1000 kg/m^3
Ambient Temperature：23.3 ℃； Liquid Temperature：22.3 ℃

DASY5 Configuration:
- Probe: EX3DV4 - SN3954; ConvF(10.93, 10.93, 10.93); Calibrated: 2014/11/21;
- Sensor-Surface: 1.4mm (Mechanical Surface Detection)
- Electronics: DAE4 Sn1279; Calibrated: 2014/7/23
- Phantom: SAM_Left; Type: QD000P40CD; Serial: TP:1542
- Measurement SW: DASY52, Version 52.8 (2);SEMCAD X Version 14.6.6 (6477)

Configuration/Ch23790/Area Scan (71x121x1): Measurement grid: dx=15mm, dy=15mm
Maximum value of SAR (interpolated) = 0.178 mW/g

Configuration/Ch23790/Zoom Scan (5x5x7)/Cube 0: Measurement grid: dx=8mm, dy=8mm, dz=5mm
Reference Value = 15.056 V/m; Power Drift = -0.03 dB
Peak SAR (extrapolated) = 0.191 mW/g
SAR(1 g) = 0.158 mW/g; SAR(10 g) = 0.127 mW/g
Maximum value of SAR (measured) = 0.179 mW/g

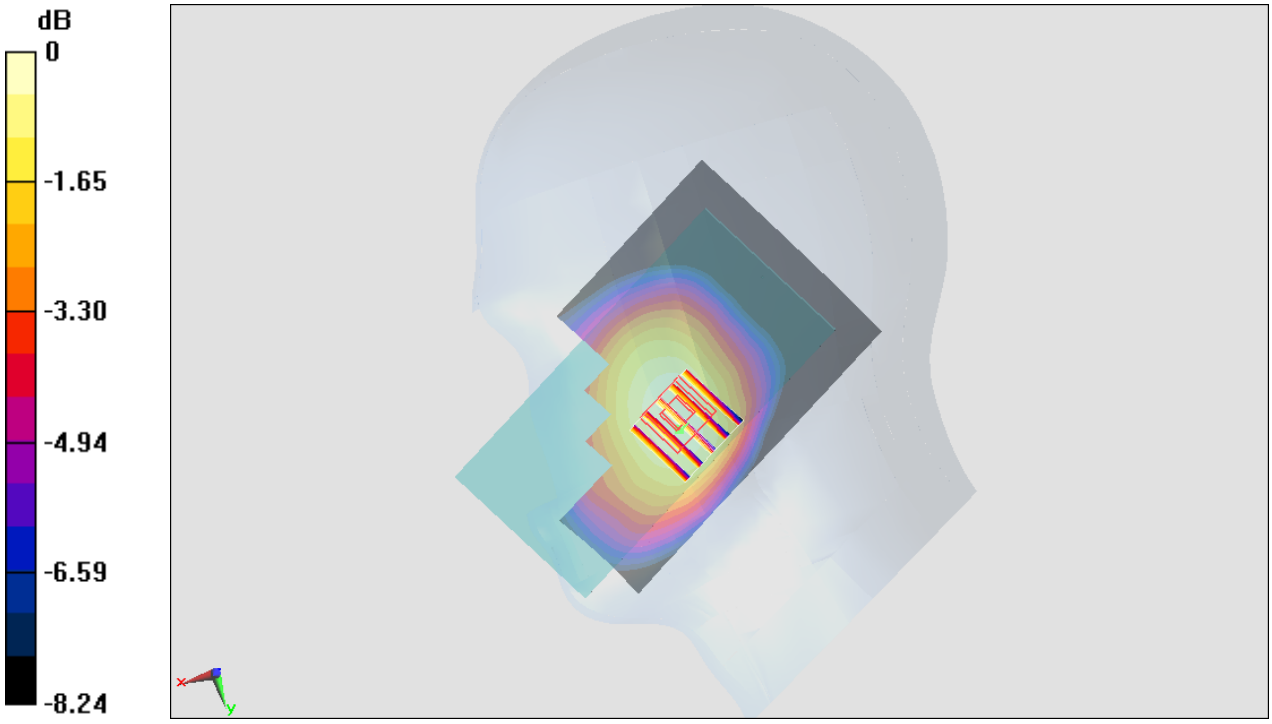

0 dB = 0.179 mW/g = -14.94 dB mW/g

Test Laboratory: Sporton International Inc. SAR/HAC Testing Lab Date: 2015/6/4

#08_LTE Band 13_10M_QPSK_1RB_0offset_Right Cheek_Ch23230

Communication System: LTE; Frequency: 782 MHz;Duty Cycle: 1:1
Medium: HSL_750_150604 Medium parameters used: f = 782 MHz; σ = 0.927 mho/m; ε_r = 42.716; ρ = 1000 kg/m^3
Ambient Temperature：23.3 ℃； Liquid Temperature：22.3 ℃

DASY5 Configuration:
- Probe: EX3DV4 - SN3954; ConvF(10.93, 10.93, 10.93); Calibrated: 2014/11/21;
- Sensor-Surface: 1.4mm (Mechanical Surface Detection)
- Electronics: DAE4 Sn1279; Calibrated: 2014/7/23
- Phantom: SAM_Left; Type: QD000P40CD; Serial: TP:1542
- Measurement SW: DASY52, Version 52.8 (2);SEMCAD X Version 14.6.6 (6477)

Configuration/Ch23230/Area Scan (71x121x1): Measurement grid: dx=15mm, dy=15mm
Maximum value of SAR (interpolated) = 0.163 mW/g

Configuration/Ch23230/Zoom Scan (5x5x7)/Cube 0: Measurement grid: dx=8mm, dy=8mm, dz=5mm
Reference Value = 13.657 V/m; Power Drift = -0.01 dB
Peak SAR (extrapolated) = 0.175 mW/g
SAR(1 g) = 0.142 mW/g; SAR(10 g) = 0.112 mW/g
Maximum value of SAR (measured) = 0.165 mW/g

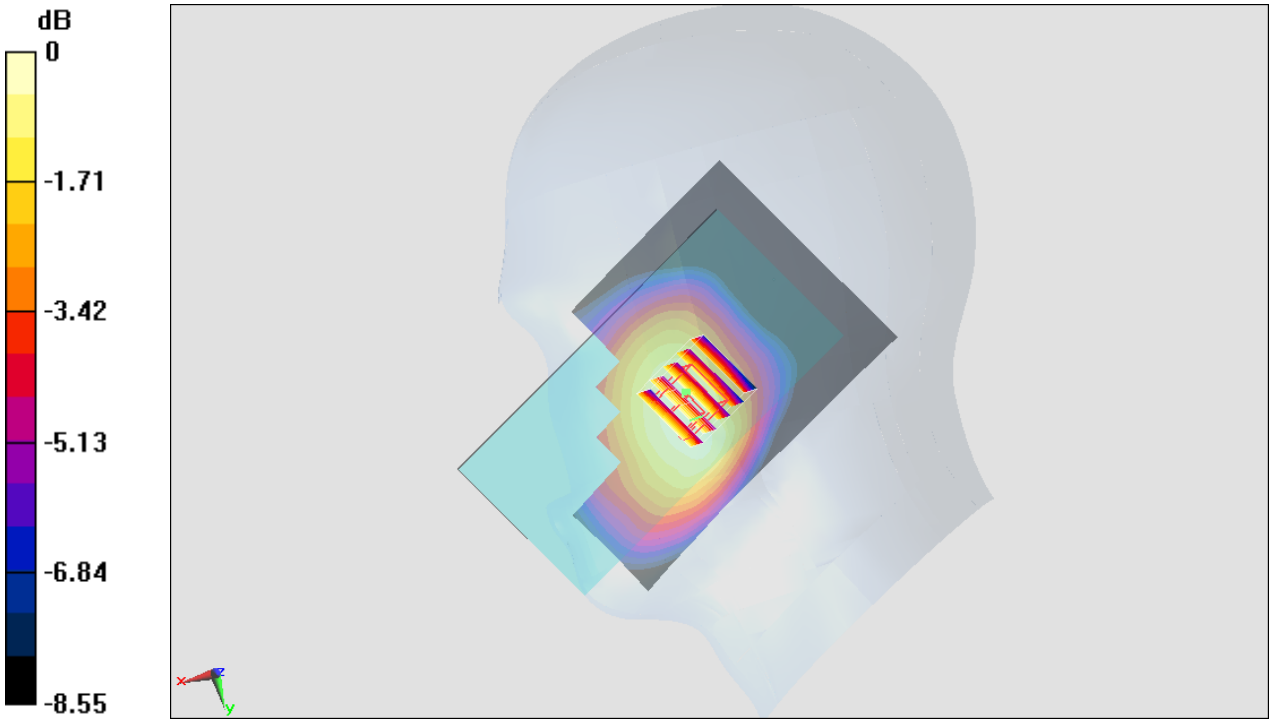

0 dB = 0.165 mW/g = -15.65 dB mW/g

#09_LTE Band 5_10M_QPSK_1RB_0offset_Right Cheek_Ch20600

Communication System: LTE; Frequency: 844 MHz;Duty Cycle: 1:1
Medium: HSL_850_150603 Medium parameters used: f = 844 MHz; σ = 0.905 S/m; ε_r = 41.782; ρ = 1000 kg/m^3
Ambient Temperature：23.3 ℃； Liquid Temperature：22.3 ℃

DASY5 Configuration:
- Probe: EX3DV4 - SN3955; ConvF(10.04, 10.04, 10.04); Calibrated: 2014/11/21;
- Sensor-Surface: 1.4mm (Mechanical Surface Detection)
- Electronics: DAE4 Sn1399; Calibrated: 2014/11/13
- Phantom: SAM_Left; Type: QD000P40CD; Serial: TP:1542
- Measurement SW: DASY52, Version 52.8 (8);SEMCAD X Version 14.6.10 (7331)

Configuration/Ch20600/Area Scan (71x121x1): Interpolated grid: dx=1.500 mm, dy=1.500 mm
Maximum value of SAR (interpolated) = 0.267 W/kg

Configuration/Ch20600/Zoom Scan (5x5x7)/Cube 0: Measurement grid: dx=8mm, dy=8mm, dz=5mm
Reference Value = 17.71 V/m; Power Drift = 0.05 dB
Peak SAR (extrapolated) = 0.294 W/kg
SAR(1 g) = 0.223 W/kg; SAR(10 g) = 0.170 W/kg
Maximum value of SAR (measured) = 0.269 W/kg

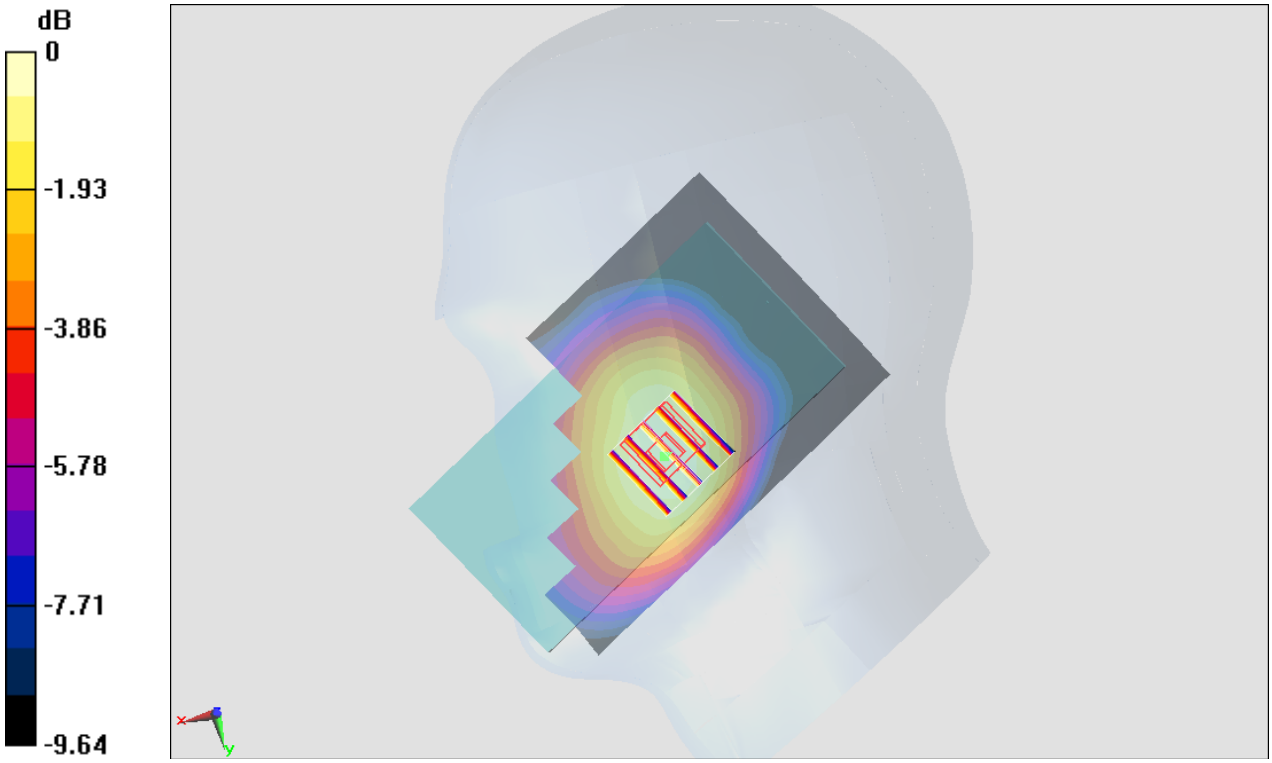

0 dB = 0.269 W/kg = -5.70 dBW/kg

Test Laboratory: Sporton International Inc. SAR/HAC Testing Lab Date: 2015/6/2

#10_LTE Band 4_20M_QPSK_1RB_0offset_Right Cheek_Ch20300

Communication System: LTE; Frequency: 1745 MHz;Duty Cycle: 1:1
Medium: HSL_1750_150602 Medium parameters used: f = 1745 MHz; σ = 1.362 mho/m; ε_r = 39.782; ρ = 1000 kg/m^3
Ambient Temperature：23.7 ℃； Liquid Temperature：22.7 ℃

DASY5 Configuration:
- Probe: EX3DV4 - SN3697; ConvF(7.98, 7.98, 7.98); Calibrated: 2014/9/29;
- Sensor-Surface: 1.4mm (Mechanical Surface Detection)
- Electronics: DAE4 Sn1388; Calibrated: 2014/9/24
- Phantom: SAM_Left; Type: QD000P40CD; Serial: TP:1542
- Measurement SW: DASY52, Version 52.8 (2);SEMCAD X Version 14.6.6 (6477)

Configuration/Ch20300/Area Scan (71x121x1): Measurement grid: dx=15mm, dy=15mm
Maximum value of SAR (interpolated) = 0.570 mW/g

Configuration/Ch20300/Zoom Scan (5x5x7)/Cube 0: Measurement grid: dx=8mm, dy=8mm, dz=5mm
Reference Value = 15.022 V/m; Power Drift = 0.00 dB
Peak SAR (extrapolated) = 0.498 mW/g
SAR(1 g) = 0.284 mW/g; SAR(10 g) = 0.158 mW/g
Maximum value of SAR (measured) = 0.467 mW/g

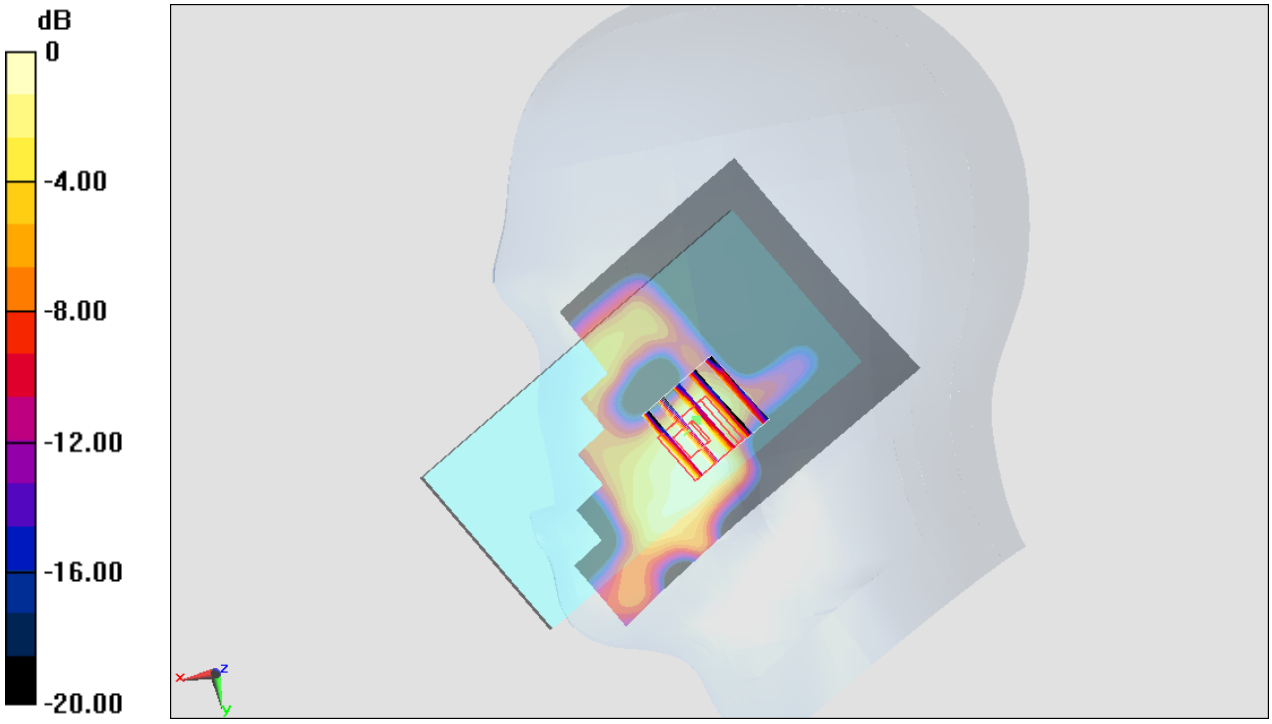

0 dB = 0.467 mW/g = -6.61 dB mW/g

#11_LTE Band 2_20M_QPSK_1RB_0offset_Right Cheek_Ch18700

Communication System: LTE; Frequency: 1860 MHz;Duty Cycle: 1:1
Medium: HSL_1900_150601 Medium parameters used: f = 1860 MHz; σ = 1.365 mho/m; ε_r = 40.17; ρ = 1000 kg/m^3
Ambient Temperature：23.3 ℃； Liquid Temperature：22.3 ℃

DASY5 Configuration:
- Probe: EX3DV4 - SN3697; ConvF(7.71, 7.71, 7.71); Calibrated: 2014/9/29;
- Sensor-Surface: 1.4mm (Mechanical Surface Detection)
- Electronics: DAE4 Sn1388; Calibrated: 2014/9/24
- Phantom: SAM_Left; Type: QD000P40CD; Serial: TP:1542
- Measurement SW: DASY52, Version 52.8 (2);SEMCAD X Version 14.6.6 (6477)

Configuration/Ch18700/Area Scan (71x121x1): Measurement grid: dx=15mm, dy=15mm
Maximum value of SAR (interpolated) = 0.350 mW/g

Configuration/Ch18700/Zoom Scan (5x5x7)/Cube 0: Measurement grid: dx=8mm, dy=8mm, dz=5mm
Reference Value = 12.114 V/m; Power Drift = 0.03 dB
Peak SAR (extrapolated) = 0.670 mW/g
SAR(1 g) = 0.152 mW/g; SAR(10 g) = 0.058 mW/g
Maximum value of SAR (measured) = 0.274 mW/g

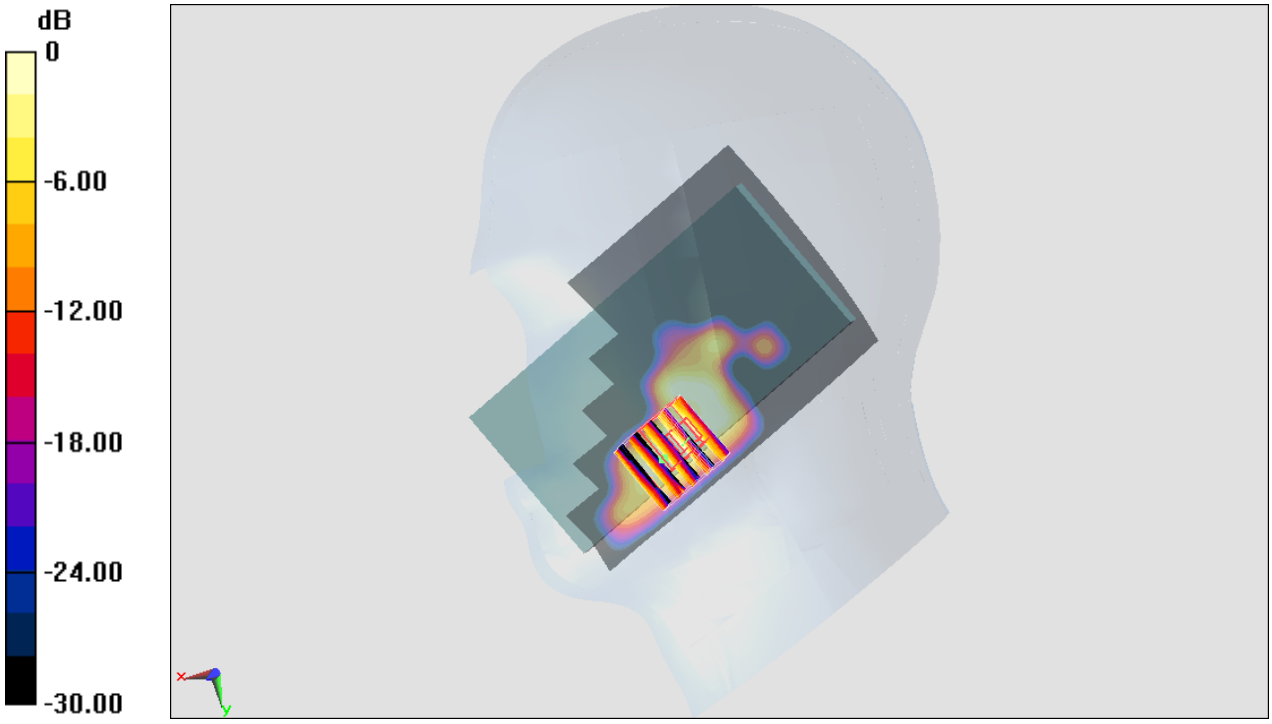

0 dB = 0.274 mW/g = -11.24 dB mW/g

Test Laboratory: Sporton International Inc. SAR/HAC Testing Lab Date: 2015/6/4

#12_LTE Band 30_10M_QPSK_1RB_0offset_Left Cheek_Ch27710

Communication System: LTE; Frequency: 2310 MHz;Duty Cycle: 1:1
Medium: HSL2300_150604 Medium parameters used: f = 2310 MHz; σ = 1.693 S/m; ε_r = 39.08; ρ = 1000 kg/m^3
Ambient Temperature：23.3 ℃； Liquid Temperature：22.3 ℃

DASY5 Configuration:
- Probe: EX3DV4 - SN3578; ConvF(7.41, 7.41, 7.41); Calibrated: 2015/3/31;
- Sensor-Surface: 1.4mm (Mechanical Surface Detection)
- Electronics: DAE4 Sn916; Calibrated: 2014/12/29
- Phantom: SAM_Right; Type: QD000P40CC; Serial: TP:1383
- Measurement SW: DASY52, Version 52.8 (8);SEMCAD X Version 14.6.10 (7331)

Configuration/Ch27710/Area Scan (81x151x1): Interpolated grid: dx=1.200 mm, dy=1.200 mm
Maximum value of SAR (interpolated) = 0.146 W/kg

Configuration/Ch27710/Zoom Scan (7x7x7)/Cube 0: Measurement grid: dx=5mm, dy=5mm, dz=5mm
Reference Value = 9.290 V/m; Power Drift = 0.08 dB
Peak SAR (extrapolated) = 0.236 W/kg
SAR(1 g) = 0.103 W/kg; SAR(10 g) = 0.052 W/kg
Maximum value of SAR (measured) = 0.143 W/kg

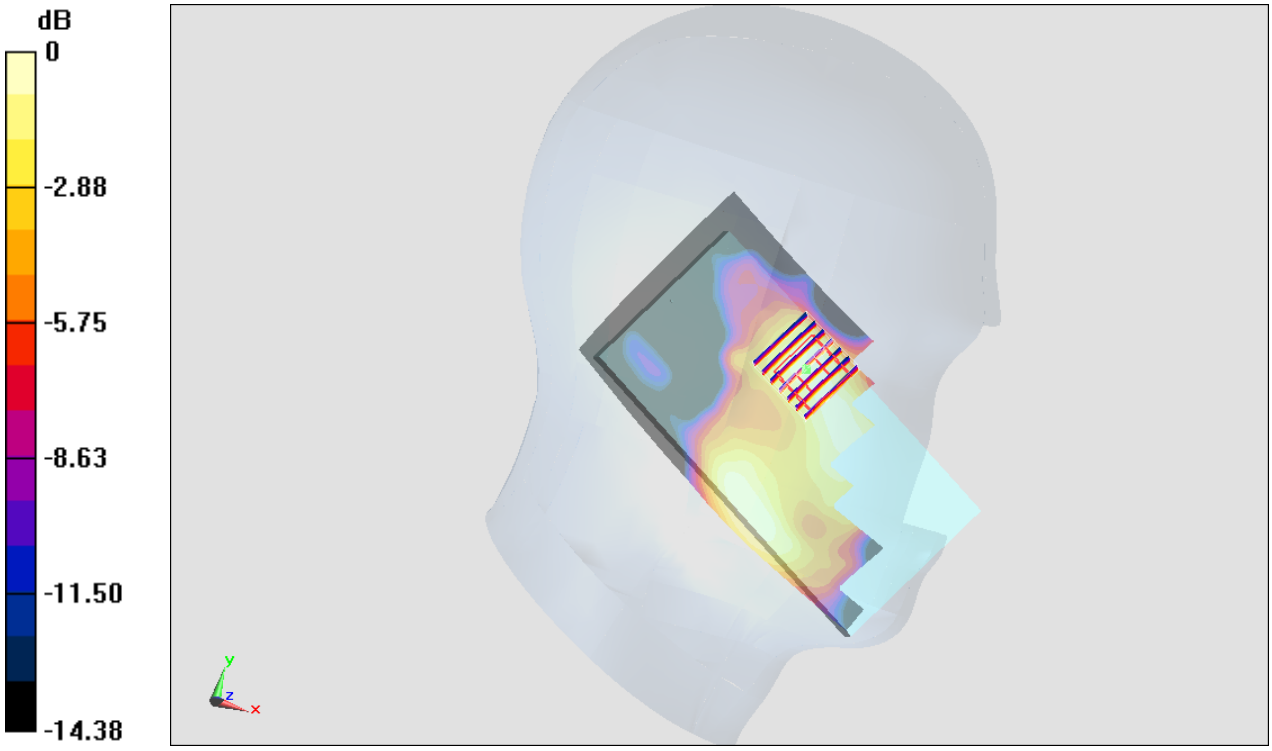

0 dB = 0.143 W/kg = -8.45 dBW/kg

#13_LTE Band 7_20M_QPSK_1RB_0offset_Left Cheek_Ch21100

Communication System: LTE; Frequency: 2535 MHz;Duty Cycle: 1:1
Medium: HSL_2600_150529 Medium parameters used: f = 2535 MHz; σ = 1.928 mho/m; ε_r = 38.11; ρ = 1000 kg/m^3
Ambient Temperature：23.4 ℃； Liquid Temperature：22.4 ℃

DASY5 Configuration:
- Probe: EX3DV4 - SN3578; ConvF(6.9, 6.9, 6.9); Calibrated: 2015/3/31;
- Sensor-Surface: 1.4mm (Mechanical Surface Detection)
- Electronics: DAE4 Sn916; Calibrated: 2014/12/29
- Phantom: SAM_Left; Type: QD000P40CD; Serial: TP:1542
- Measurement SW: DASY52, Version 52.8 (2);SEMCAD X Version 14.6.6 (6477)

Configuration/Ch21100/Area Scan (81x151x1): Measurement grid: dx=12mm, dy=12mm
Maximum value of SAR (interpolated) = 0.171 mW/g

Configuration/Ch21100/Zoom Scan (7x7x7)/Cube 0: Measurement grid: dx=5mm, dy=5mm, dz=5mm
Reference Value = 9.248 V/m; Power Drift = 0.05 dB
Peak SAR (extrapolated) = 0.184 mW/g
SAR(1 g) = 0.102 mW/g; SAR(10 g) = 0.054 mW/g
Maximum value of SAR (measured) = 0.153 mW/g

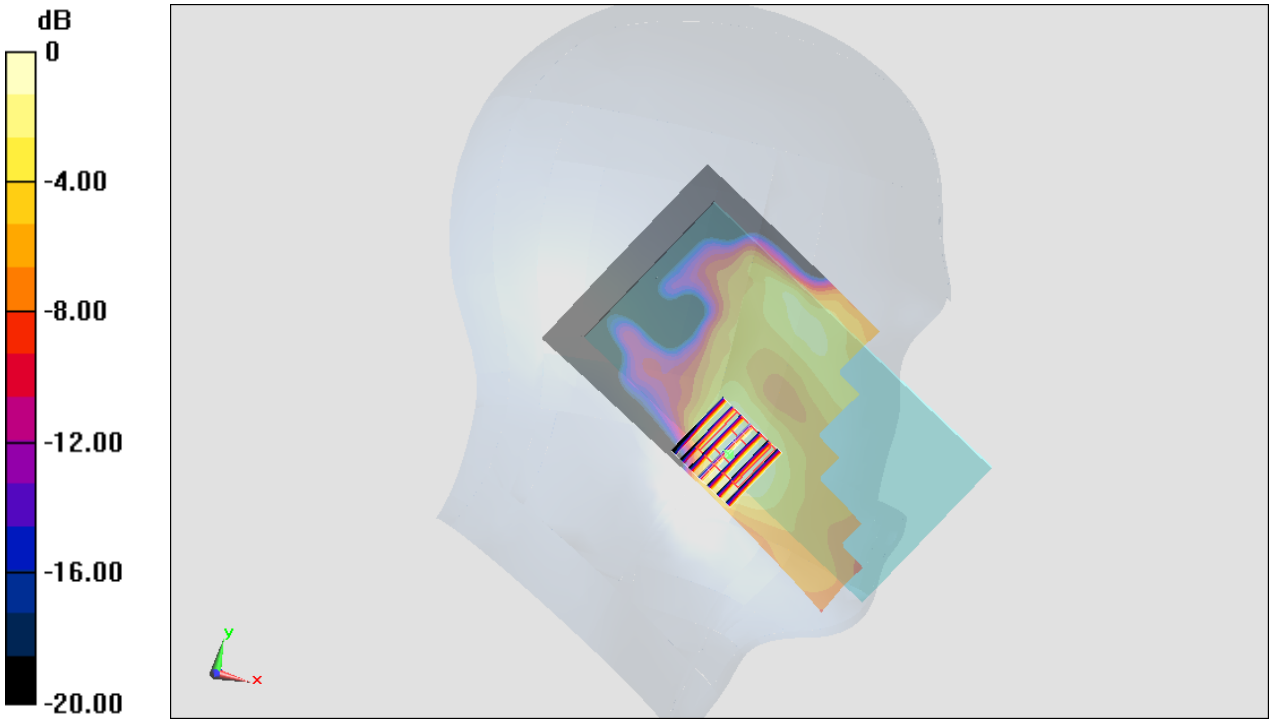

0 dB = 0.153 mW/g = -16.31 dB mW/g

Test Laboratory: Sporton International Inc. SAR/HAC Testing Lab Date: 2015.06.06

#14_WLAN2.4GHz_802.11b_1Mbps_Right Cheek_Ch6

Communication System: WIFI (0); Frequency: 2437 MHz;Duty Cycle: 1:1.01
Medium: HSL_2450_150606 Medium parameters used: f = 2437 MHz; σ = 1.802 mho/m; ε_r = 39.26; ρ = 1000 kg/m^3
Ambient Temperature：23.5 ℃; Liquid Temperature：22.8 ℃

DASY5 Configuration:
- Probe: EX3DV4 - SN3801; ConvF(6.85, 6.85, 6.85); Calibrated: 2014.06.18
- Sensor-Surface: 2mm (Mechanical Surface Detection)
- Electronics: DAE4 Sn905; Calibrated: 2014.07.14
- Phantom: SAM2; Type: SAM; Serial: TP-1477
- Measurement SW: DASY52, Version 52.8 (8); SEMCAD X Version 14.4.5 (3634)

Ch6/Area Scan (81x151x1): Measurement grid: dx=12mm, dy=12mm
Maximum value of SAR (interpolated) = 1.037 mW/g

Ch6/Zoom Scan (7x7x7)/Cube 0: Measurement grid: dx=5mm, dy=5mm, dz=5mm
Reference Value = 11.587 V/m; Power Drift = -0.06 dB
Peak SAR (extrapolated) = 1.373 W/kg
SAR(1 g) = 0.594 mW/g; SAR(10 g) = 0.272 mW/g
Maximum value of SAR (measured) = 0.945 mW/g

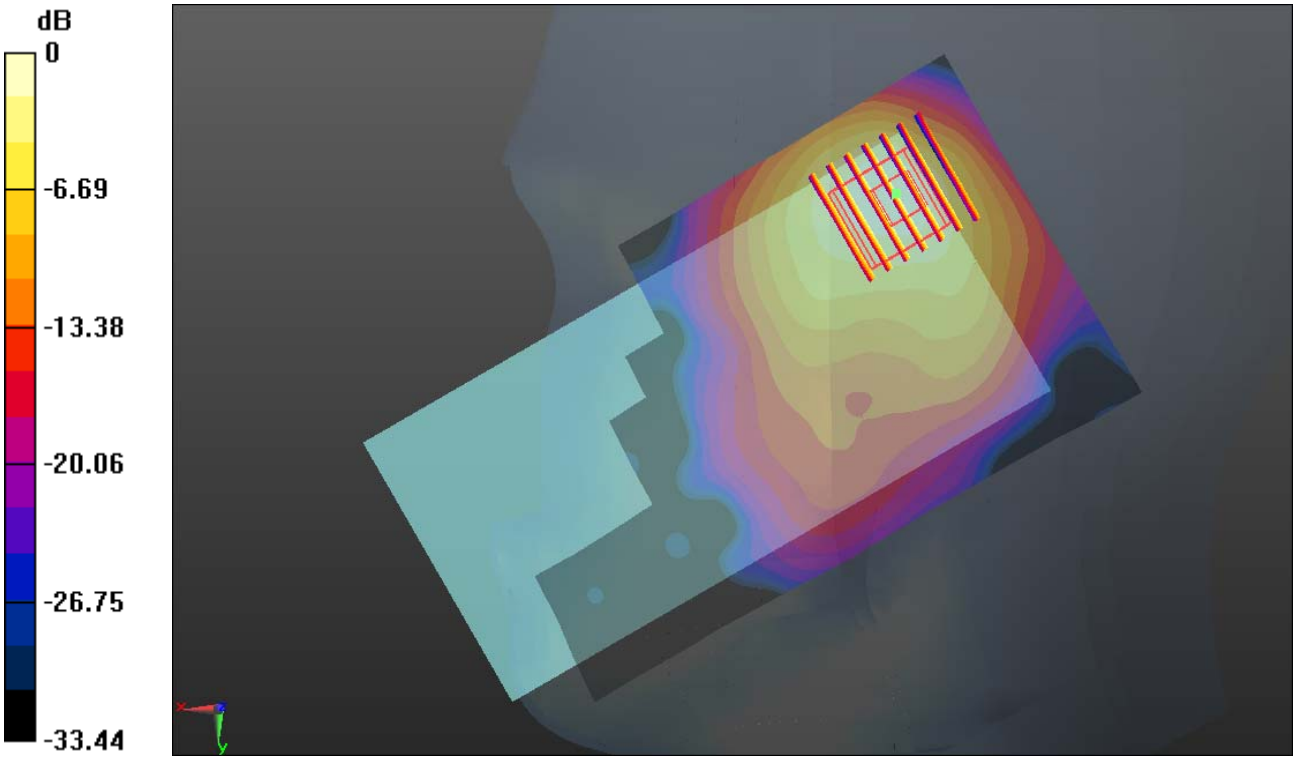

0 dB = 0.950mW/g

Test Laboratory: Sporton International Inc. SAR/HAC Testing Lab Date: 2015.06.12

#15_WLAN5.2GHz_802.11a_6Mbps_Right Cheek_Ch48

Communication System: WIFI (0); Frequency: 5240 MHz;Duty Cycle: 1:1.059
Medium: HSL_5000_150612 Medium parameters used: f = 5240 MHz; σ = 4.84 mho/m; ε_r = 35.443; ρ = 1000 kg/m^3
Ambient Temperature：23.4 ℃； Liquid Temperature：22.7 ℃

DASY5 Configuration:
- Probe: EX3DV4 - SN7350; ConvF(5.34, 5.34, 5.34); Calibrated: 2015.01.08
- Sensor-Surface: 1.4mm (Mechanical Surface Detection)
- Electronics: DAE4 Sn905; Calibrated: 2014.07.14
- Phantom: SAM2; Type: SAM; Serial: TP-1477
- Measurement SW: DASY52, Version 52.8 (8); SEMCAD X Version 14.4.5 (3634)

Ch48/Area Scan (101x181x1): Measurement grid: dx=10mm, dy=10mm
Maximum value of SAR (interpolated) = 2.384 mW/g

Ch48/Zoom Scan (8x8x7)/Cube 0: Measurement grid: dx=4mm, dy=4mm, dz=1.4mm
Reference Value = 0.972 V/m; Power Drift = 0.16 dB
Peak SAR (extrapolated) = 3.884 W/kg
SAR(1 g) = 0.919 mW/g; SAR(10 g) = 0.230 mW/g
Maximum value of SAR (measured) = 2.319 mW/g

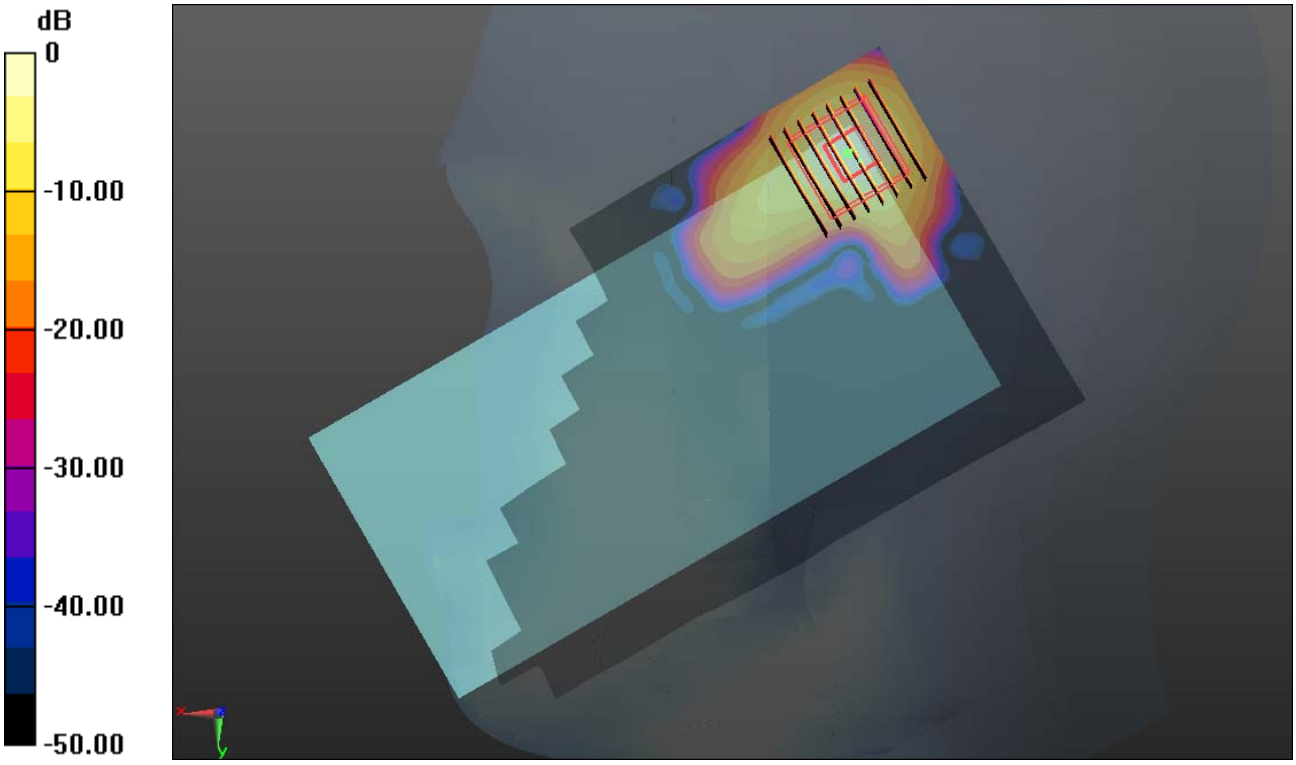

0 dB = 2.320mW/g

Test Laboratory: Sporton International Inc. SAR/HAC Testing Lab Date: 2015.06.12

#16_WLAN5.8GHz_802.11a_6Mbps_Right Cheek_Ch165

Communication System: WIFI (0); Frequency: 5825 MHz;Duty Cycle: 1:1.059
Medium: HSL_5000_150612 Medium parameters used: f = 5825 MHz; σ = 5.421 mho/m; ε_r = 34.3; ρ = 1000 kg/m^3
Ambient Temperature：23.4 ℃； Liquid Temperature：22.7 ℃

DASY5 Configuration:
- Probe: EX3DV4 - SN7350; ConvF(4.6, 4.6, 4.6); Calibrated: 2015.01.08
- Sensor-Surface: 1.4mm (Mechanical Surface Detection)
- Electronics: DAE4 Sn905; Calibrated: 2014.07.14
- Phantom: SAM2; Type: SAM; Serial: TP-1477
- Measurement SW: DASY52, Version 52.8 (8); SEMCAD X Version 14.4.5 (3634)

Ch165/Area Scan (101x181x1): Measurement grid: dx=10mm, dy=10mm
Maximum value of SAR (interpolated) = 2.355 mW/g

Ch165/Zoom Scan (8x8x7)/Cube 0: Measurement grid: dx=4mm, dy=4mm, dz=1.4mm
Reference Value = 1.135 V/m; Power Drift = 0.11 dB
Peak SAR (extrapolated) = 4.175 W/kg
SAR(1 g) = 0.858 mW/g; SAR(10 g) = 0.214 mW/g
Maximum value of SAR (measured) = 2.284 mW/g

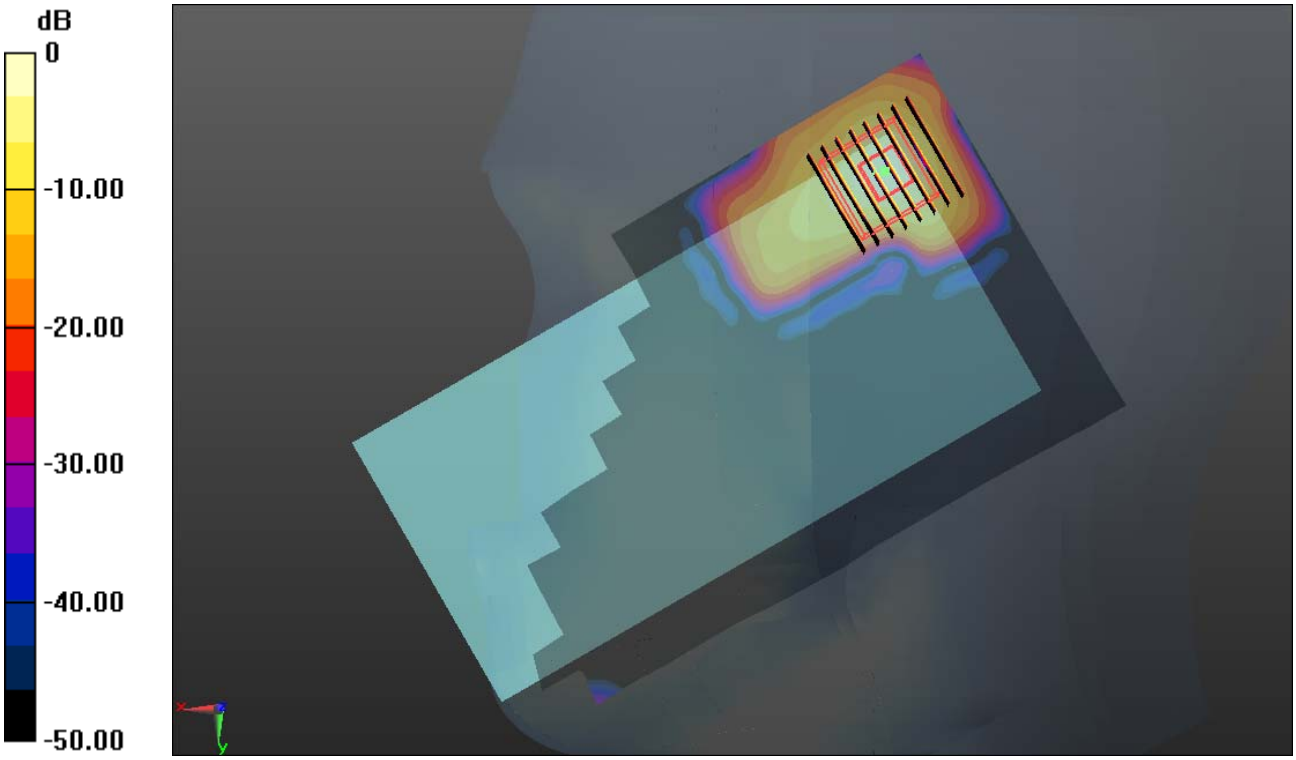

0 dB = 2.280mW/g

#17_GSM850_GPRS (2 Tx slots)_Back_10mm_Ch189

Communication System: GSM850; Frequency: 836.4 MHz;Duty Cycle: 1:4.15
Medium: MSL_850_150531 Medium parameters used: f = 836.4 MHz; σ = 0.984 mho/m; ε_r = 56.077; ρ = 1000 kg/m^3
Ambient Temperature：23.4 ℃； Liquid Temperature：22.4 ℃

DASY5 Configuration:
- Probe: EX3DV4 - SN3578; ConvF(9.27, 9.27, 9.27); Calibrated: 2015/3/31;
- Sensor-Surface: 1.4mm (Mechanical Surface Detection)
- Electronics: DAE4 Sn916; Calibrated: 2014/12/29
- Phantom: SAM_Right; Type: QD000P40CC; Serial: TP:1383
- Measurement SW: DASY52, Version 52.8 (2);SEMCAD X Version 14.6.6 (6477)

Configuration/Ch189/Area Scan (71x121x1): Measurement grid: dx=15mm, dy=15mm
Maximum value of SAR (interpolated) = 1.60 mW/g

Configuration/Ch189/Zoom Scan (5x5x7)/Cube 0: Measurement grid: dx=8mm, dy=8mm, dz=5mm
Reference Value = 43.090 V/m; Power Drift = 0.07 dB
Peak SAR (extrapolated) = 2.013 mW/g
SAR(1 g) = 1.060 mW/g; SAR(10 g) = 0.574 mW/g
Maximum value of SAR (measured) = 1.68 mW/g

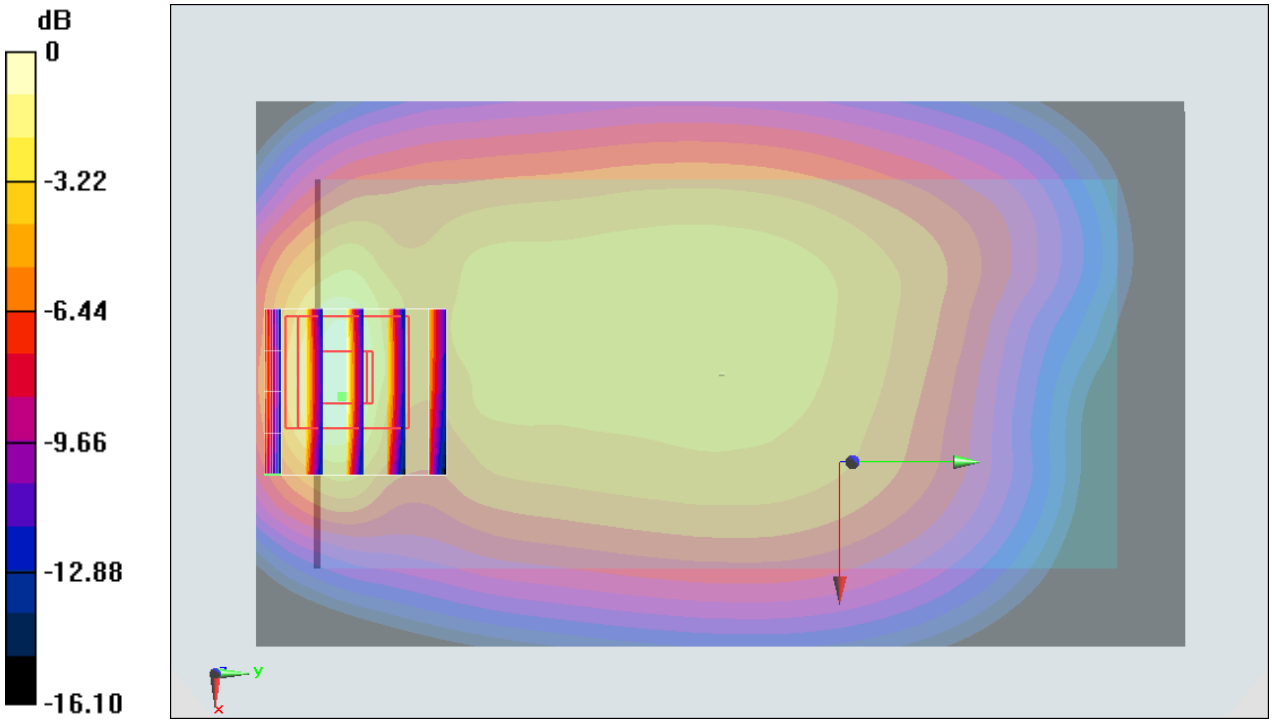

0 dB = 1.68 mW/g = 4.51 dB mW/g

Test Laboratory: Sporton International Inc. SAR/HAC Testing Lab Date: 2015/5/30

#18_GSM1900_GPRS (2 Tx slots)_Bottom Side_10mm_Ch810

Communication System: PCS; Frequency: 1909.8 MHz;Duty Cycle: 1:4.15
Medium: MSL_1900_150530 Medium parameters used: f = 1909.8 MHz; σ = 1.552 mho/m; ε_r = 54.352; ρ = 1000 kg/m^3
Ambient Temperature：23.6 ℃； Liquid Temperature：22.6 ℃

DASY5 Configuration:
- Probe: EX3DV4 - SN3578; ConvF(7.28, 7.28, 7.28); Calibrated: 2015/3/31;
- Sensor-Surface: 1.4mm (Mechanical Surface Detection)
- Electronics: DAE4 Sn916; Calibrated: 2014/12/29
- Phantom: SAM_Left; Type: QD000P40CD; Serial: TP:1542
- Measurement SW: DASY52, Version 52.8 (2);SEMCAD X Version 14.6.6 (6477)

Configuration/Ch810/Area Scan (31x61x1): Measurement grid: dx=15mm, dy=15mm
Maximum value of SAR (interpolated) = 1.03 mW/g

Configuration/Ch810/Zoom Scan (5x5x7)/Cube 0: Measurement grid: dx=8mm, dy=8mm, dz=5mm
Reference Value = 26.416 V/m; Power Drift = -0.17 dB
Peak SAR (extrapolated) = 1.155 mW/g
SAR(1 g) = 0.708 mW/g; SAR(10 g) = 0.385 mW/g
Maximum value of SAR (measured) = 0.985 mW/g

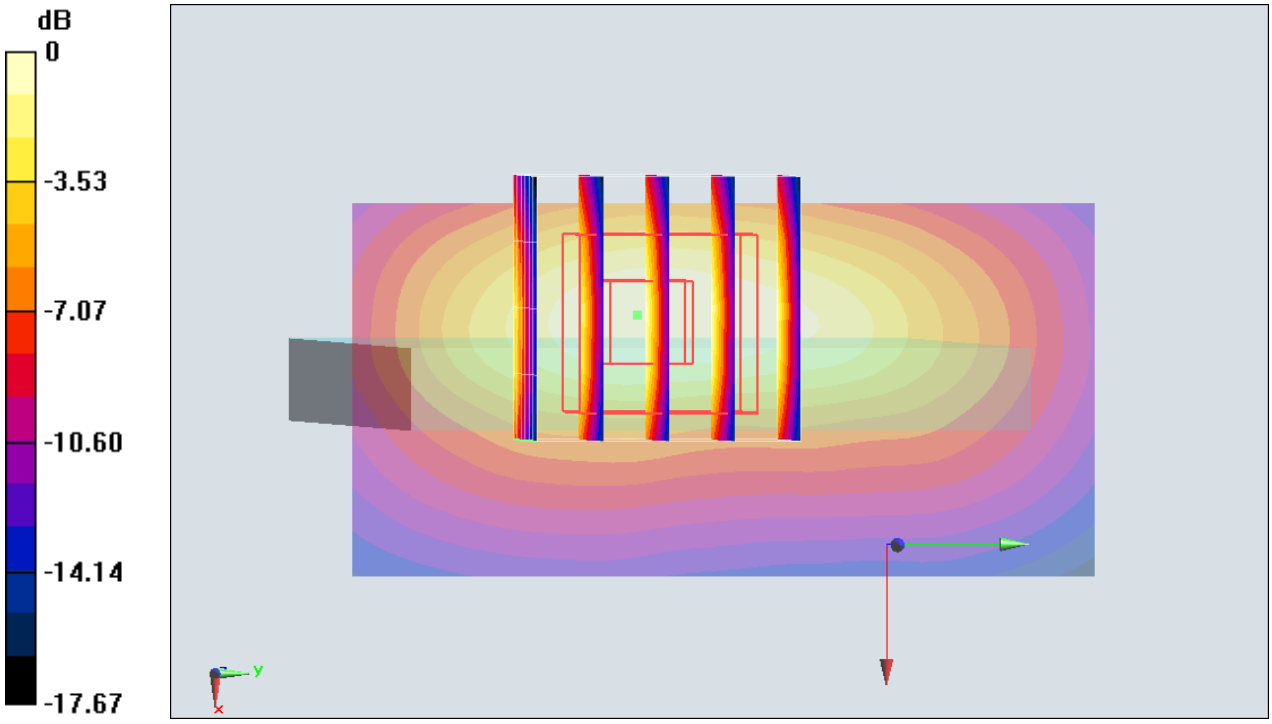

0 dB = 0.985 mW/g = -0.13 dB mW/g

Test Laboratory: Sporton International Inc. SAR/HAC Testing Lab Date: 2015/5/31

#19_WCDMA Band V_RMC 12.2Kbps_Back_10mm_Ch4233

Communication System: WCDMA; Frequency: 846.6 MHz;Duty Cycle: 1:1
Medium: MSL_850_150531 Medium parameters used: f = 846.6MHz; σ = 0.993 mho/m; ε_r = 55.977; ρ = 1000 kg/m^3
Ambient Temperature：23.4 ℃； Liquid Temperature：22.4 ℃

DASY5 Configuration:
- Probe: EX3DV4 - SN3578; ConvF(9.27, 9.27, 9.27); Calibrated: 2015/3/31;
- Sensor-Surface: 1.4mm (Mechanical Surface Detection)
- Electronics: DAE4 Sn916; Calibrated: 2014/12/29
- Phantom: SAM_Right; Type: QD000P40CC; Serial: TP:1383
- Measurement SW: DASY52, Version 52.8 (2);SEMCAD X Version 14.6.6 (6477)

Configuration/Ch4233/Area Scan (71x121x1): Measurement grid: dx=15mm, dy=15mm
Maximum value of SAR (interpolated) = 0.899 mW/g

Configuration/Ch4233/Zoom Scan (5x5x7)/Cube 0: Measurement grid: dx=8mm, dy=8mm, dz=5mm
Reference Value = 32.260 V/m; Power Drift = 0.14 dB
Peak SAR (extrapolated) = 1.170 mW/g
SAR(1 g) = 0.628 mW/g; SAR(10 g) = 0.337 mW/g
Maximum value of SAR (measured) = 0.975 mW/g

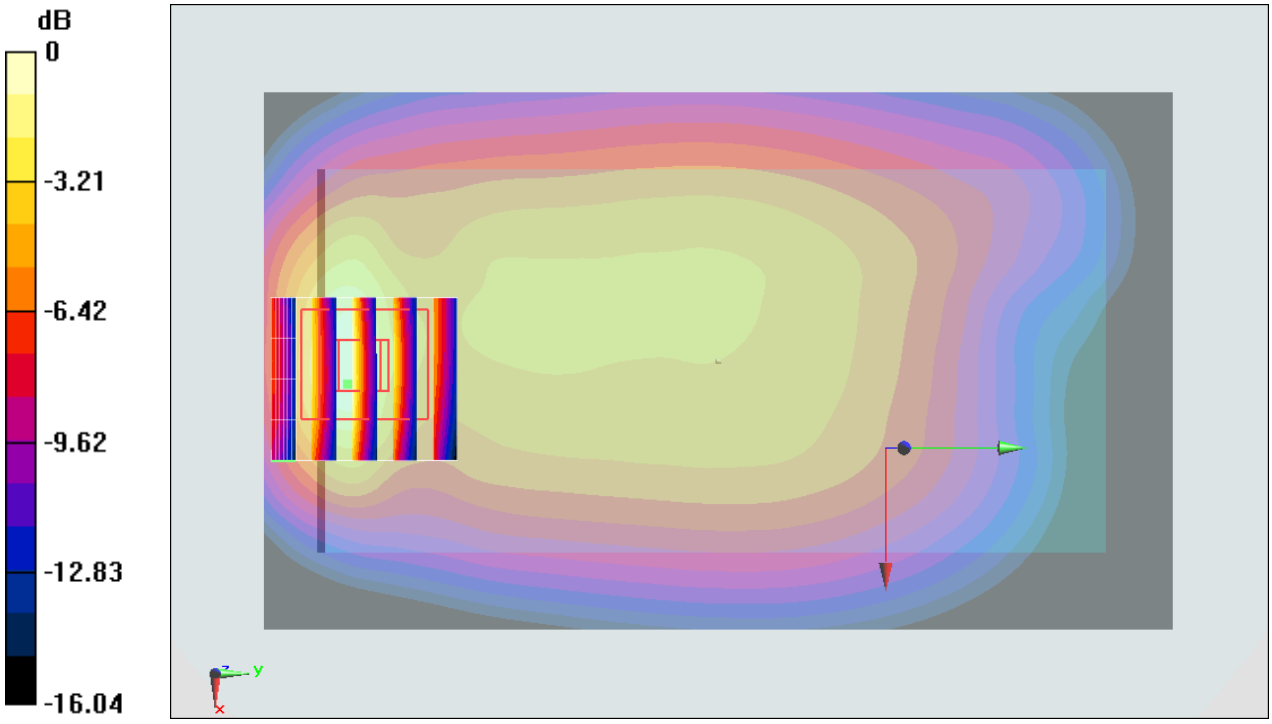

0 dB = 0.975 mW/g = -0.22 dB mW/g

#20_WCDMA Band IV_RMC 12.2Kbps_Back_10mm_Ch1513

Communication System: WCDMA; Frequency: 1752.6 MHz;Duty Cycle: 1:1
Medium: MSL_1750_150531 Medium parameters used: f = 1752.6 MHz; σ = 1.533 mho/m; ε_r = 52.209; ρ = 1000 kg/m^3
Ambient Temperature：23.6 ℃; Liquid Temperature：22.6 ℃

DASY5 Configuration:
- Probe: EX3DV4 - SN3578; ConvF(7.65, 7.65, 7.65); Calibrated: 2015/3/31;
- Sensor-Surface: 1.4mm (Mechanical Surface Detection)
- Electronics: DAE4 Sn916; Calibrated: 2014/12/29
- Phantom: SAM_Left; Type: QD000P40CD; Serial: TP:1542
- Measurement SW: DASY52, Version 52.8 (2);SEMCAD X Version 14.6.6 (6477)

Configuration/Ch1513/Area Scan (71x121x1): Measurement grid: dx=15mm, dy=15mm
Maximum value of SAR (interpolated) = 1.18 mW/g

Configuration/Ch1513/Zoom Scan (5x5x7)/Cube 0: Measurement grid: dx=8mm, dy=8mm, dz=5mm
Reference Value = 31.152 V/m; Power Drift = -0.00 dB
Peak SAR (extrapolated) = 1.689 mW/g
SAR(1 g) = 1.000 mW/g; SAR(10 g) = 0.553 mW/g
Maximum value of SAR (measured) = 1.41 mW/g

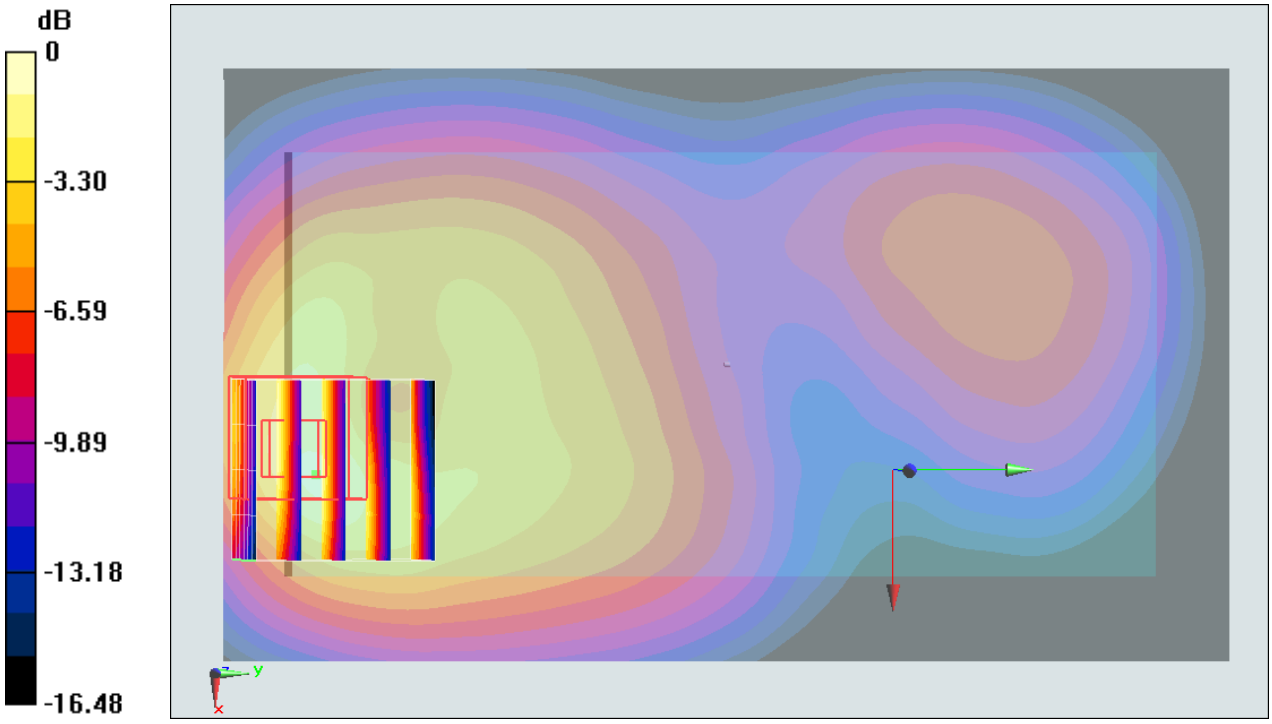

0 dB = 1.41 mW/g = 2.98 dB mW/g

#21_WCDMA Band II_RMC 12.2Kbps_Bottom Side_10mm_Ch9400

Communication System: WCDMA; Frequency: 1880 MHz;Duty Cycle: 1:1
Medium: MSL_1900_150530 Medium parameters used: f = 1880 MHz; σ = 1.516 mho/m; ε_r = 54.451; ρ = 1000 kg/m^3
Ambient Temperature：23.6 ℃； Liquid Temperature：22.6 ℃

DASY5 Configuration:
- Probe: EX3DV4 - SN3578; ConvF(7.28, 7.28, 7.28); Calibrated: 2015/3/31;
- Sensor-Surface: 1.4mm (Mechanical Surface Detection)
- Electronics: DAE4 Sn916; Calibrated: 2014/12/29
- Phantom: SAM_Left; Type: QD000P40CD; Serial: TP:1542
- Measurement SW: DASY52, Version 52.8 (2);SEMCAD X Version 14.6.6 (6477)

Configuration/Ch9400/Area Scan (41x61x1): Measurement grid: dx=15mm, dy=15mm
Maximum value of SAR (interpolated) = 1.25 mW/g

Configuration/Ch9400/Zoom Scan (5x5x7)/Cube 0: Measurement grid: dx=8mm, dy=8mm, dz=5mm
Reference Value = 29.585 V/m; Power Drift = -0.06 dB
Peak SAR (extrapolated) = 1.392 mW/g
SAR(1 g) = 0.854 mW/g; SAR(10 g) = 0.470 mW/g
Maximum value of SAR (measured) = 1.22 mW/g

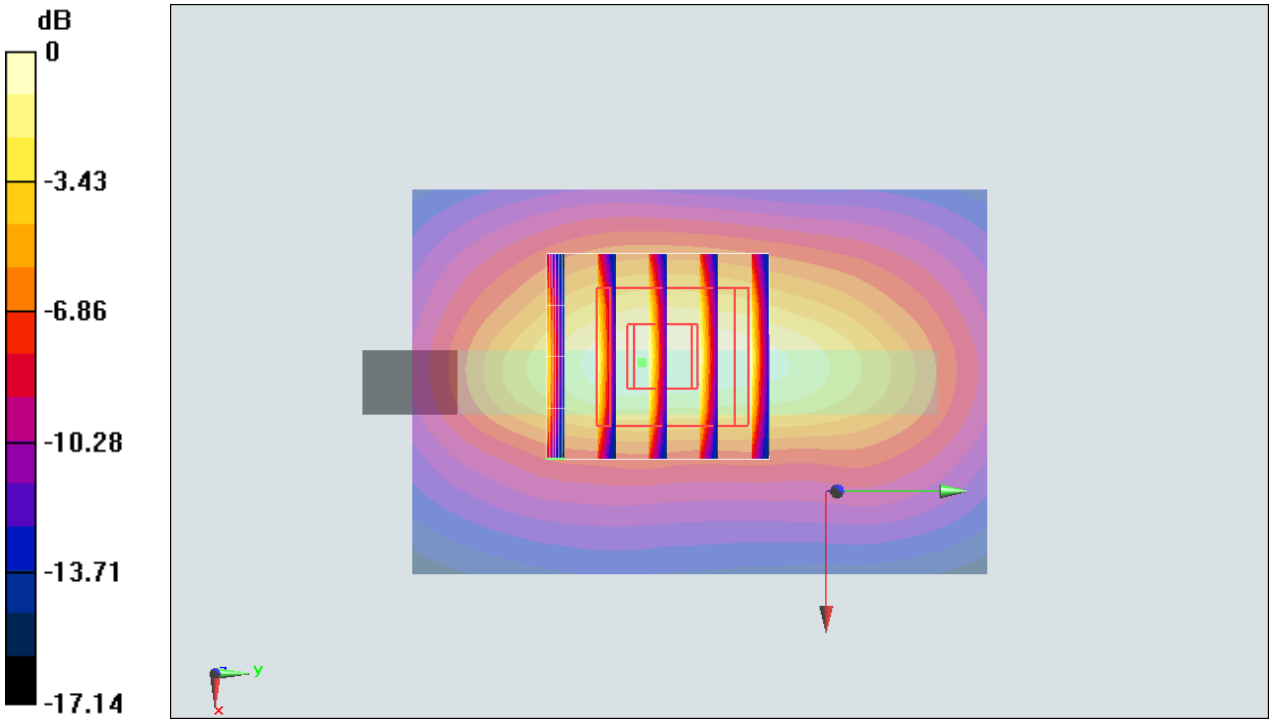

0 dB = 1.22 mW/g = 1.73 dB mW/g

#22_LTE Band 12_10M_QPSK_1RB_0offset_Right Side_10mm_Ch23095

Communication System: LTE; Frequency: 707.5 MHz;Duty Cycle: 1:1
Medium: MSL_750_150601 Medium parameters used: f = 707.5 MHz; σ = 0.929 mho/m; ε_r = 58.26; ρ = 1000 kg/m^3
Ambient Temperature：23.5 ℃； Liquid Temperature：22.5 ℃

DASY5 Configuration:
- Probe: EX3DV4 - SN3697; ConvF(8.83, 8.83, 8.83); Calibrated: 2014/9/29;
- Sensor-Surface: 1.4mm (Mechanical Surface Detection)
- Electronics: DAE4 Sn1388; Calibrated: 2014/9/24
- Phantom: SAM_Right; Type: QD000P40CC; Serial: TP:1383
- Measurement SW: DASY52, Version 52.8 (2);SEMCAD X Version 14.6.6 (6477)

Configuration/Ch23095/Area Scan (41x121x1): Measurement grid: dx=15mm, dy=15mm
Maximum value of SAR (interpolated) = 0.438 mW/g

Configuration/Ch23095/Zoom Scan (5x5x7)/Cube 0: Measurement grid: dx=8mm, dy=8mm, dz=5mm
Reference Value = 22.674 V/m; Power Drift = -0.01 dB
Peak SAR (extrapolated) = 0.491 mW/g
SAR(1 g) = 0.339 mW/g; SAR(10 g) = 0.241 mW/g
Maximum value of SAR (measured) = 0.438 mW/g

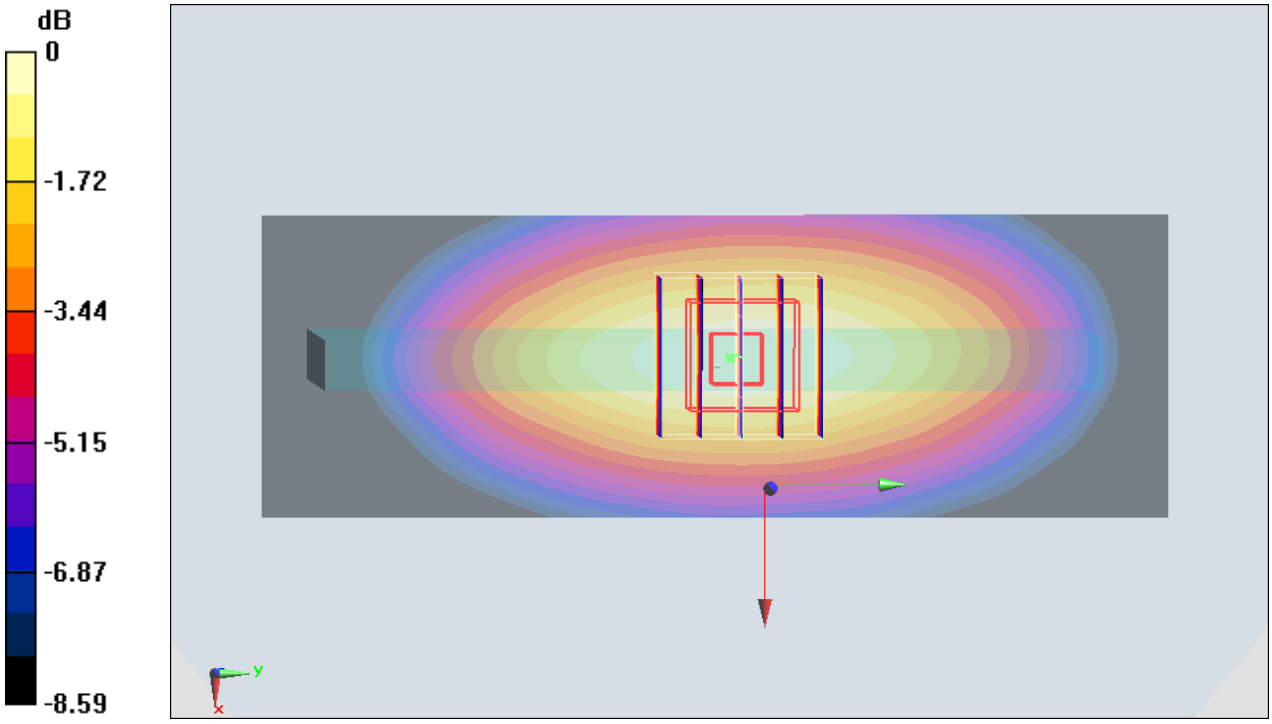

0 dB = 0.438 mW/g = -7.17 dB mW/g

Test Laboratory: Sporton International Inc. SAR/HAC Testing Lab Date: 2015/6/1

#23_LTE Band 17_10M_QPSK_1RB_0offset_Right Side_10mm_Ch23790

Communication System: LTE; Frequency: 710 MHz;Duty Cycle: 1:1
Medium: MSL_750_150601 Medium parameters used: f = 710 MHz; σ = 0.931 mho/m; ε_r = 58.24; ρ = 1000 kg/m^3
Ambient Temperature：23.5 ℃； Liquid Temperature：22.5 ℃

DASY5 Configuration:
- Probe: EX3DV4 - SN3697; ConvF(8.83, 8.83, 8.83); Calibrated: 2014/9/29;
- Sensor-Surface: 1.4mm (Mechanical Surface Detection)
- Electronics: DAE4 Sn1388; Calibrated: 2014/9/24
- Phantom: SAM_Right; Type: QD000P40CC; Serial: TP:1383
- Measurement SW: DASY52, Version 52.8 (2);SEMCAD X Version 14.6.6 (6477)

Configuration/Ch23790/Area Scan (41x121x1): Measurement grid: dx=15mm, dy=15mm
Maximum value of SAR (interpolated) = 0.470 mW/g

Configuration/Ch23790/Zoom Scan (5x5x7)/Cube 0: Measurement grid: dx=8mm, dy=8mm, dz=5mm
Reference Value = 23.349 V/m; Power Drift = 0.00 dB
Peak SAR (extrapolated) = 0.528 mW/g
SAR(1 g) = 0.363 mW/g; SAR(10 g) = 0.257 mW/g
Maximum value of SAR (measured) = 0.470 mW/g

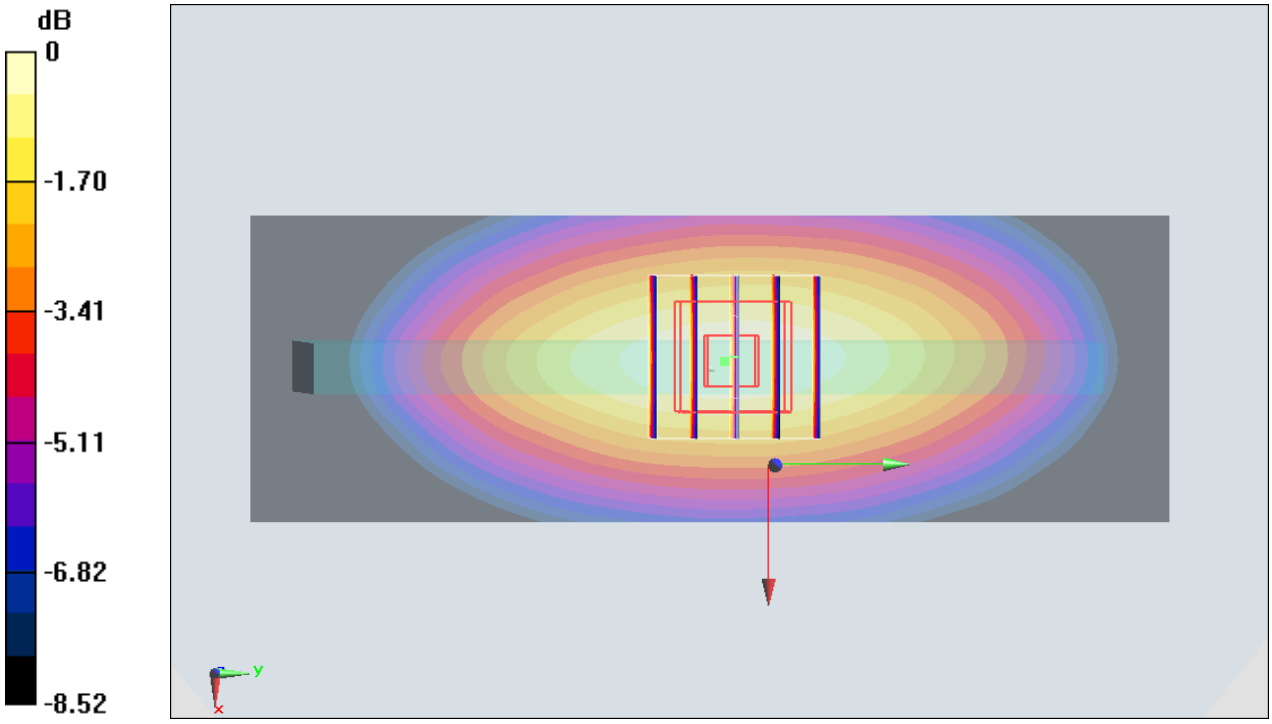

0 dB = 0.470 mW/g = -6.56 dB mW/g

Test Laboratory: Sporton International Inc. SAR/HAC Testing Lab Date: 2015/6/1

#24_LTE Band 13_10M_QPSK_1RB_0offset_Back_10mm_Ch23230

Communication System: LTE; Frequency: 782 MHz;Duty Cycle: 1:1
Medium: MSL_750_150601 Medium parameters used: f = 782 MHz; σ = 0.997 mho/m; ε_r = 57.495; ρ = 1000 kg/m^3
Ambient Temperature：23.5 ℃； Liquid Temperature：22.5 ℃

DASY5 Configuration:
- Probe: EX3DV4 - SN3697; ConvF(8.83, 8.83, 8.83); Calibrated: 2014/9/29;
- Sensor-Surface: 1.4mm (Mechanical Surface Detection)
- Electronics: DAE4 Sn1388; Calibrated: 2014/9/24
- Phantom: SAM_Right; Type: QD000P40CC; Serial: TP:1383
- Measurement SW: DASY52, Version 52.8 (2);SEMCAD X Version 14.6.6 (6477)

Configuration/Ch23230/Area Scan (71x121x1): Measurement grid: dx=15mm, dy=15mm
Maximum value of SAR (interpolated) = 0.541 mW/g

Configuration/Ch23230/Zoom Scan (5x5x7)/Cube 0: Measurement grid: dx=8mm, dy=8mm, dz=5mm
Reference Value = 24.585 V/m; Power Drift = 0.06 dB
Peak SAR (extrapolated) = 0.651 mW/g
SAR(1 g) = 0.361 mW/g; SAR(10 g) = 0.204 mW/g
Maximum value of SAR (measured) = 0.549 mW/g

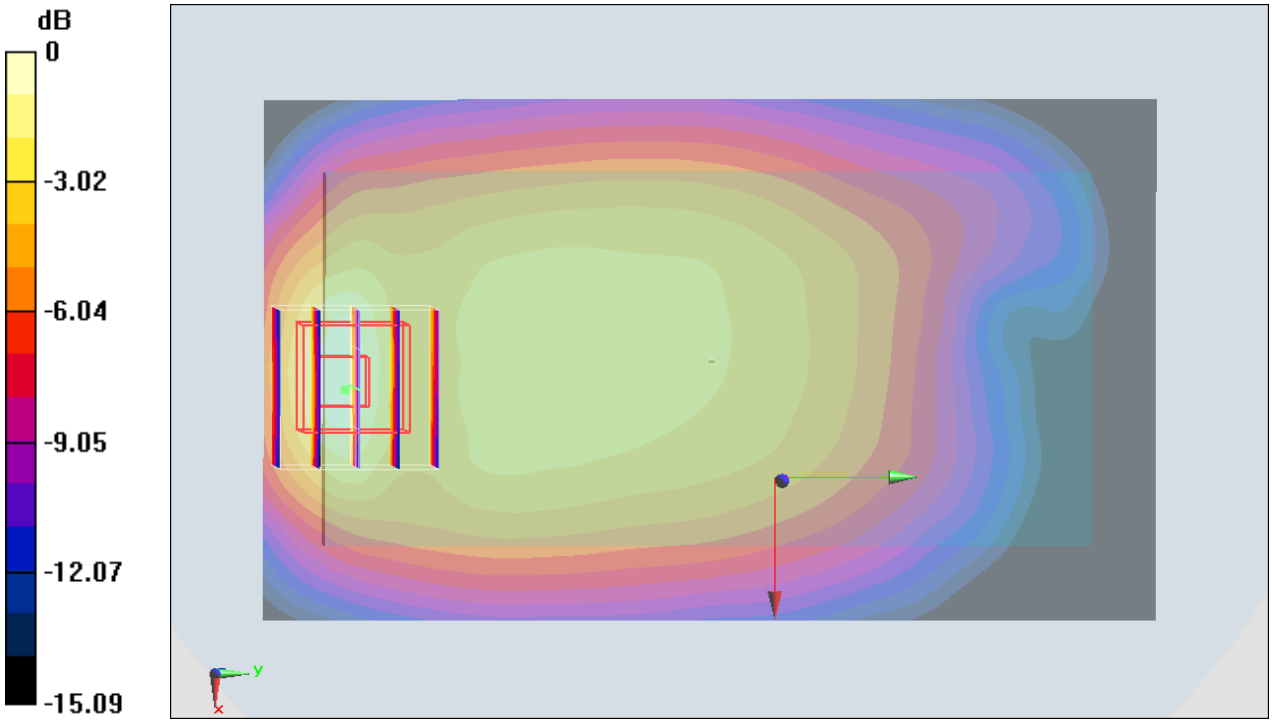

0 dB = 0.549 mW/g = -5.21 dB mW/g

Test Laboratory: Sporton International Inc. SAR/HAC Testing Lab Date: 2015/5/31

#25_LTE Band 5_10M_QPSK_1RB_0offset_Back_10mm_Ch20600

Communication System: LTE; Frequency: 844 MHz;Duty Cycle: 1:1
Medium: MSL_850_150531 Medium parameters used: f = 844 MHz; σ = 0.991 mho/m; ε_r = 56.004; ρ = 1000 kg/m^3
Ambient Temperature：23.4 ℃； Liquid Temperature：22.4 ℃

DASY5 Configuration:
- Probe: EX3DV4 - SN3578; ConvF(9.27, 9.27, 9.27); Calibrated: 2015/3/31;
- Sensor-Surface: 1.4mm (Mechanical Surface Detection)
- Electronics: DAE4 Sn916; Calibrated: 2014/12/29
- Phantom: SAM_Right; Type: QD000P40CC; Serial: TP:1383
- Measurement SW: DASY52, Version 52.8 (2);SEMCAD X Version 14.6.6 (6477)

Configuration/Ch20600/Area Scan (71x121x1): Measurement grid: dx=15mm, dy=15mm
Maximum value of SAR (interpolated) = 0.806 mW/g

Configuration/Ch20600/Zoom Scan (5x5x7)/Cube 0: Measurement grid: dx=8mm, dy=8mm, dz=5mm
Reference Value = 31.336 V/m; Power Drift = 0.05 dB
Peak SAR (extrapolated) = 1.063 mW/g
SAR(1 g) = 0.566 mW/g; SAR(10 g) = 0.303 mW/g
Maximum value of SAR (measured) = 0.894 mW/g

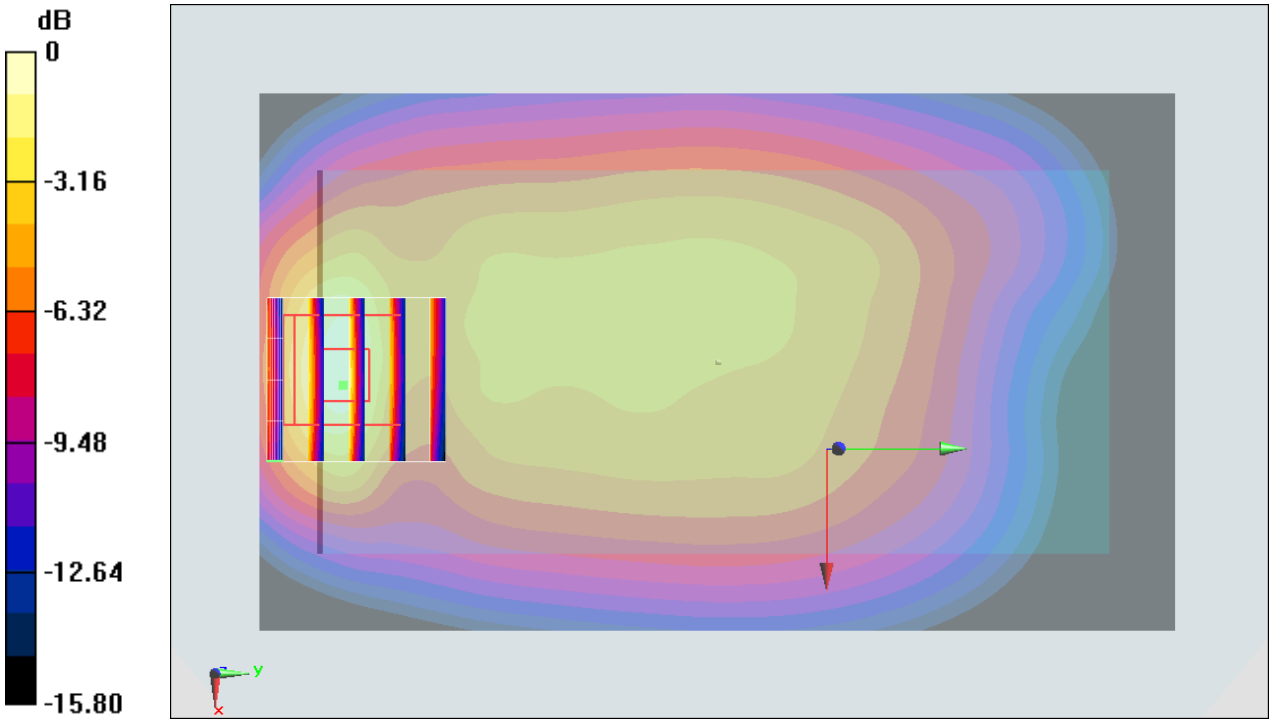

0 dB = 0.894 mW/g = -0.97 dB mW/g

Test Laboratory: Sporton International Inc. SAR/HAC Testing Lab Date: 2015/5/31

#26_LTE Band 4_20M_QPSK_1RB_0offset_Back_10mm_Ch20300

Communication System: LTE; Frequency: 1745 MHz;Duty Cycle: 1:1
Medium: MSL_1750_150531 Medium parameters used: f = 1745 MHz; σ = 1.524 mho/m; ε_r = 52.239; ρ = 1000 kg/m^3
Ambient Temperature：23.6 ℃； Liquid Temperature：22.6 ℃

DASY5 Configuration:
- Probe: EX3DV4 - SN3578; ConvF(7.65, 7.65, 7.65); Calibrated: 2015/3/31;
- Sensor-Surface: 1.4mm (Mechanical Surface Detection)
- Electronics: DAE4 Sn916; Calibrated: 2014/12/29
- Phantom: SAM_Left; Type: QD000P40CD; Serial: TP:1542
- Measurement SW: DASY52, Version 52.8 (2);SEMCAD X Version 14.6.6 (6477)

Configuration/Ch20300/Area Scan (71x121x1): Measurement grid: dx=15mm, dy=15mm
Maximum value of SAR (interpolated) = 1.12 mW/g

Configuration/Ch20300/Zoom Scan (5x5x7)/Cube 0: Measurement grid: dx=8mm, dy=8mm, dz=5mm
Reference Value = 27.014 V/m; Power Drift = 0.10 dB
Peak SAR (extrapolated) = 1.495 mW/g
SAR(1 g) = 0.896 mW/g; SAR(10 g) = 0.487 mW/g
Maximum value of SAR (measured) = 1.30 mW/g

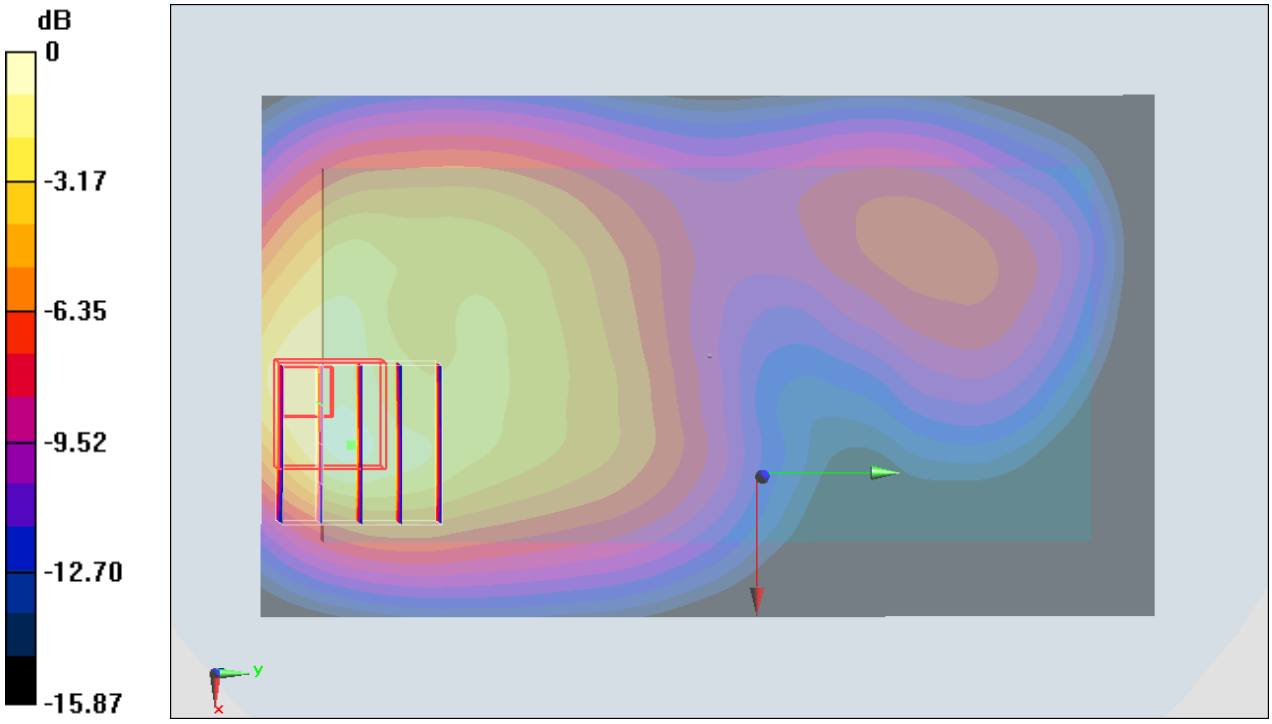

0 dB = 1.30 mW/g = 2.28 dB mW/g

#27_LTE Band 2_20M_QPSK_1RB_0offset_Back_10mm_Ch18700

Communication System: LTE; Frequency: 1860 MHz;Duty Cycle: 1:1
Medium: MSL_1900_150530 Medium parameters used: f = 1860 MHz; σ = 1.493 mho/m; ε_r = 54.504; ρ = 1000 kg/m^3
Ambient Temperature：23.6 ℃； Liquid Temperature：22.6 ℃

DASY5 Configuration:
- Probe: EX3DV4 - SN3578; ConvF(7.28, 7.28, 7.28); Calibrated: 2015/3/31;
- Sensor-Surface: 1.4mm (Mechanical Surface Detection)
- Electronics: DAE4 Sn916; Calibrated: 2014/12/29
- Phantom: SAM_Left; Type: QD000P40CD; Serial: TP:1542
- Measurement SW: DASY52, Version 52.8 (2);SEMCAD X Version 14.6.6 (6477)

Configuration/Ch18700/Area Scan (71x121x1): Measurement grid: dx=15mm, dy=15mm
Maximum value of SAR (interpolated) = 1.08 mW/g

Configuration/Ch18700/Zoom Scan (5x5x7)/Cube 0: Measurement grid: dx=8mm, dy=8mm, dz=5mm
Reference Value = 28.997 V/m; Power Drift = 0.00 dB
Peak SAR (extrapolated) = 1.373 mW/g
SAR(1 g) = 0.830 mW/g; SAR(10 g) = 0.456 mW/g
Maximum value of SAR (measured) = 1.11 mW/g

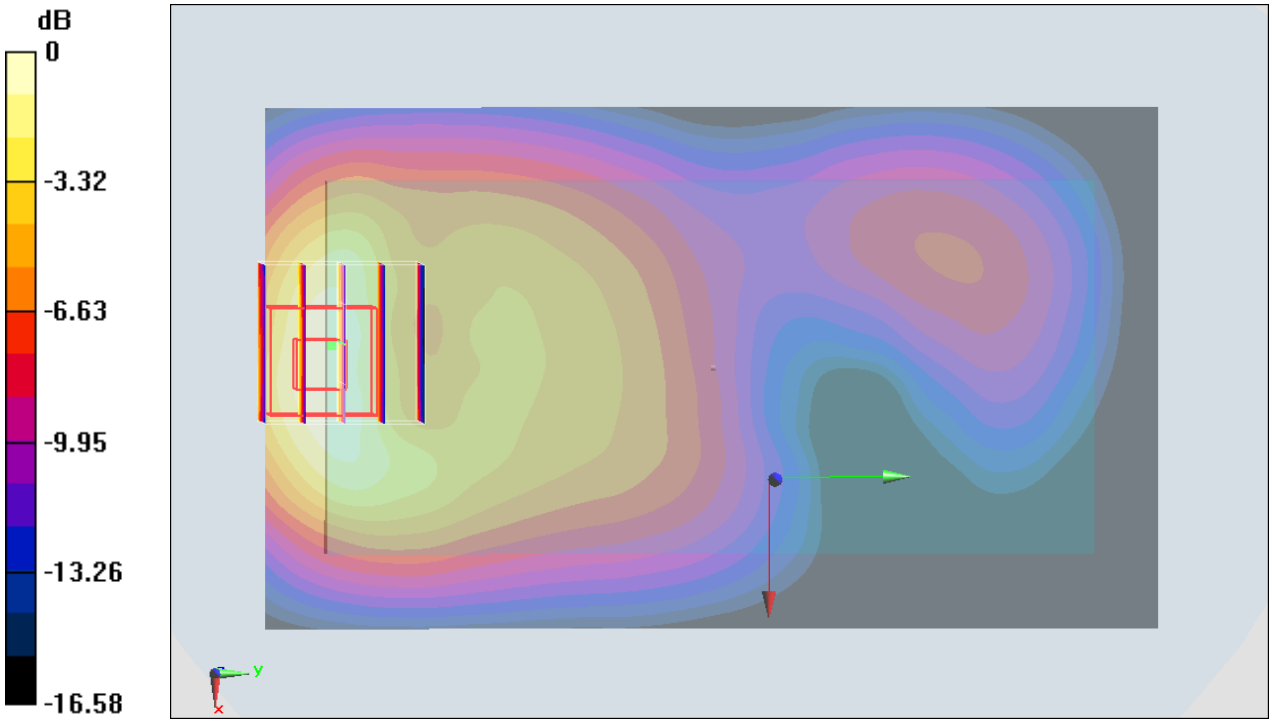

0 dB = 1.11 mW/g = 0.91 dB mW/g

Test Laboratory: Sporton International Inc. SAR/HAC Testing Lab Date: 2015/6/5

#28_LTE Band 30_10M_QPSK_1RB_0offset_Front_10mm_Ch27710

Communication System: LTE; Frequency: 2310 MHz;Duty Cycle: 1:1
Medium: MSL_2300_150605 Medium parameters used: f = 2310 MHz; σ = 1.836 S/m; ε_r = 53.082; ρ = 1000 kg/m^3
Ambient Temperature：23.3 ℃; Liquid Temperature：22.3 ℃

DASY5 Configuration:
- Probe: EX3DV4 - SN3578; ConvF(7.09, 7.09, 7.09); Calibrated: 2015/3/31;
- Sensor-Surface: 1.4mm (Mechanical Surface Detection)
- Electronics: DAE4 Sn916; Calibrated: 2014/12/29
- Phantom: SAM_Right; Type: QD000P40CC; Serial: TP:1383
- Measurement SW: DASY52, Version 52.8 (8);SEMCAD X Version 14.6.10 (7331)

Configuration/Ch27710/Area Scan (81x151x1): Interpolated grid: dx=1.200 mm, dy=1.200 mm
Maximum value of SAR (interpolated) = 0.387 W/kg

Configuration/Ch27710/Zoom Scan (7x7x7)/Cube 0: Measurement grid: dx=5mm, dy=5mm, dz=5mm
Reference Value = 14.95 V/m; Power Drift = -0.00 dB
Peak SAR (extrapolated) = 0.462 W/kg
SAR(1 g) = 0.261 W/kg; SAR(10 g) = 0.147 W/kg
Maximum value of SAR (measured) = 0.389 W/kg

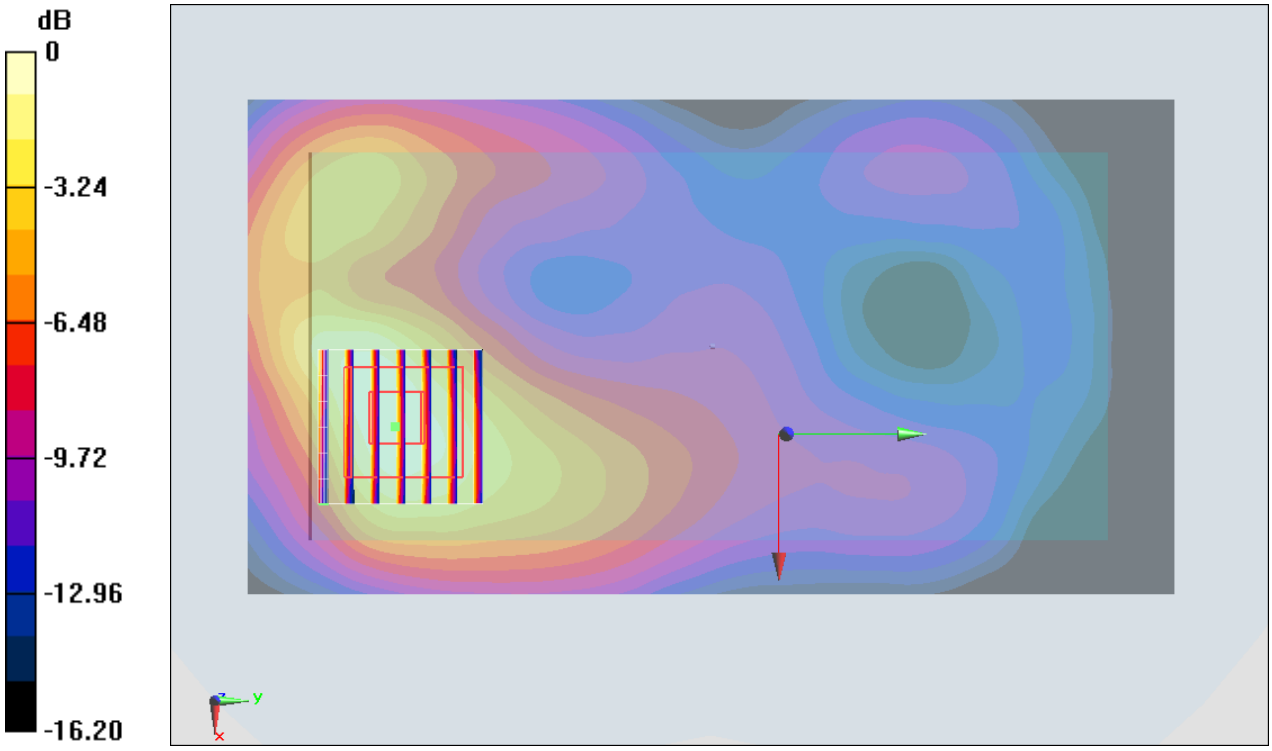

0 dB = 0.389 W/kg = -4.10 dBW/kg

#29_LTE Band 7_20M_QPSK_1RB_0offset_Bottom Side_10mm_Ch21100

Communication System: LTE; Frequency: 2535 MHz;Duty Cycle: 1:1
Medium: MSL_2600_150530 Medium parameters used: f = 2535 MHz; σ = 2.144 mho/m; ε_r = 51.599; ρ = 1000 kg/m^3
Ambient Temperature：23.5 ℃； Liquid Temperature：22.5 ℃

DASY5 Configuration:
- Probe: EX3DV4 - SN3578; ConvF(6.69, 6.69, 6.69); Calibrated: 2015/3/31;
- Sensor-Surface: 1.4mm (Mechanical Surface Detection)
- Electronics: DAE4 Sn916; Calibrated: 2014/12/29
- Phantom: SAM_Right; Type: QD000P40CC; Serial: TP:1383
- Measurement SW: DASY52, Version 52.8 (2);SEMCAD X Version 14.6.6 (6477)

Configuration/Ch21100/Area Scan (41x81x1): Measurement grid: dx=12mm, dy=12mm
Maximum value of SAR (interpolated) = 0.521 mW/g

Configuration/Ch21100/Zoom Scan (7x7x7)/Cube 0: Measurement grid: dx=5mm, dy=5mm, dz=5mm
Reference Value = 16.285 V/m; Power Drift = -0.03 dB
Peak SAR (extrapolated) = 0.662 mW/g
SAR(1 g) = 0.349 mW/g; SAR(10 g) = 0.180 mW/g
Maximum value of SAR (measured) = 0.545 mW/g

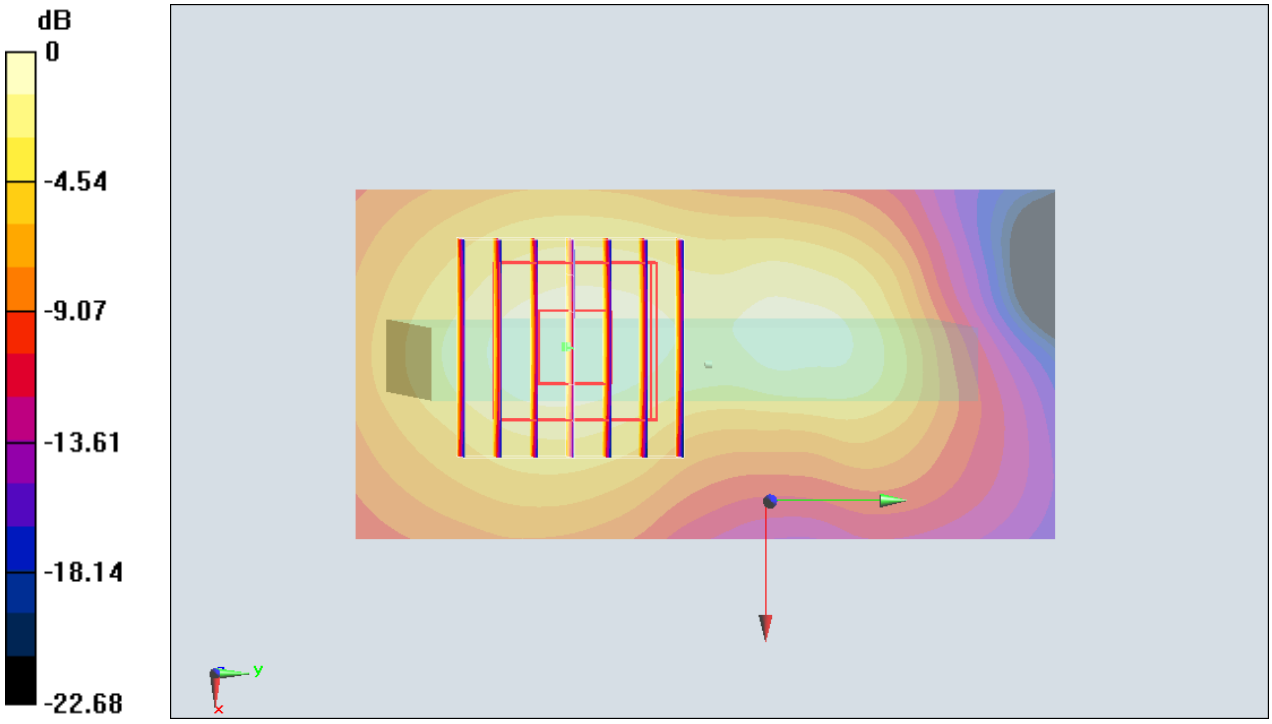

0 dB = 0.545 mW/g = -5.27 dB mW/g

Test Laboratory: Sporton International Inc. SAR/HAC Testing Lab Date: 2015.06.06

#30_WLAN2.4GHz_802.11b_1Mbps_Back 10mm_Ch11

Communication System: WIFI (0); Frequency: 2462 MHz;Duty Cycle: 1:1.01
Medium: MSL_2450_150606 Medium parameters used: f = 2462 MHz; σ = 1.96 mho/m; ε_r = 51.401; ρ = 1000 kg/m^3
Ambient Temperature：23.5 ℃； Liquid Temperature：22.5 ℃

DASY5 Configuration:
- Probe: EX3DV4 - SN3801; ConvF(6.9, 6.9, 6.9); Calibrated: 2014.06.18
- Sensor-Surface: 2mm (Mechanical Surface Detection)
- Electronics: DAE4 Sn905; Calibrated: 2014.07.14
- Phantom: SAM1; Type: SAM; Serial: TP-1479
- Measurement SW: DASY52, Version 52.8 (8); SEMCAD X Version 14.4.5 (3634)

Ch11/Area Scan (91x151x1): Measurement grid: dx=12mm, dy=12mm
Maximum value of SAR (interpolated) = 0.186 mW/g

Ch11/Zoom Scan (7x7x7)/Cube 0: Measurement grid: dx=5mm, dy=5mm, dz=5mm
Reference Value = 3.119 V/m; Power Drift = 0.02 dB
Peak SAR (extrapolated) = 0.274 W/kg
SAR(1 g) = 0.135 mW/g; SAR(10 g) = 0.068 mW/g
Maximum value of SAR (measured) = 0.196 mW/g

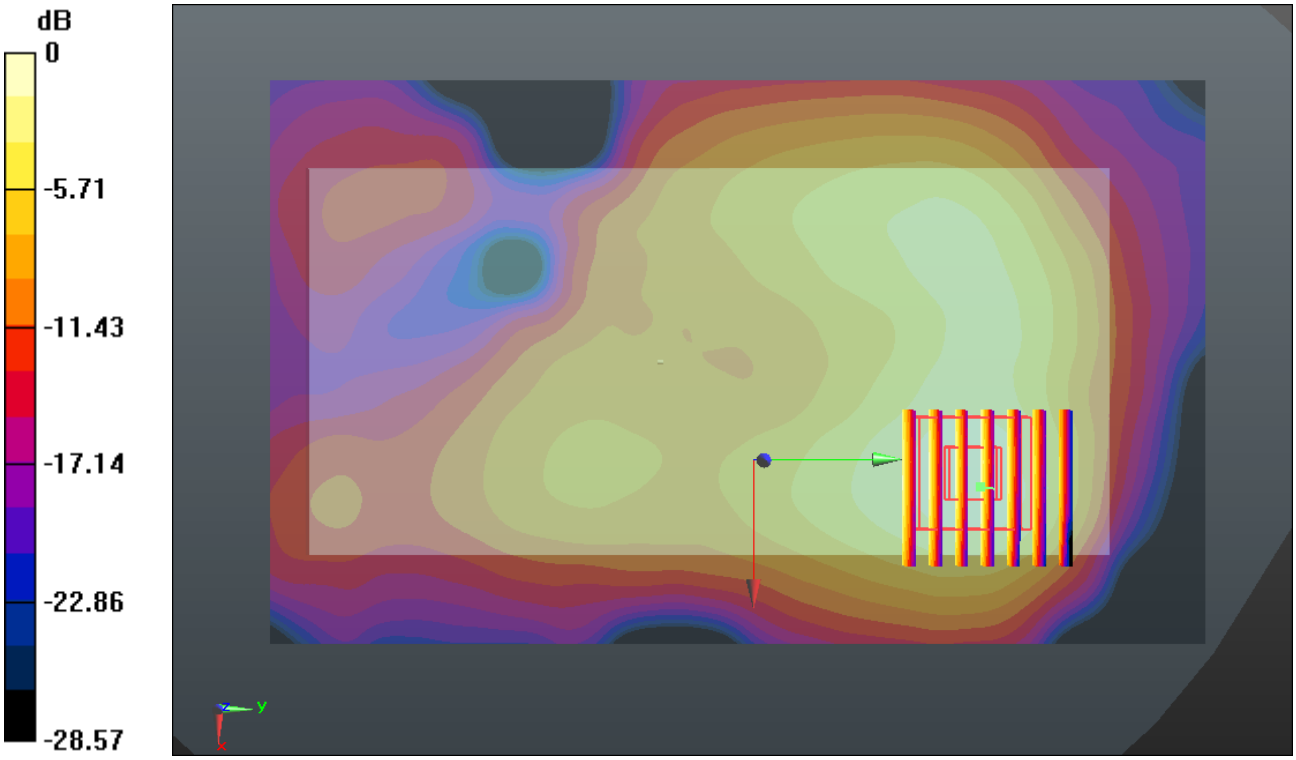

0 dB = 0.200mW/g

Test Laboratory: Sporton International Inc. SAR/HAC Testing Lab Date: 2015/5/30

#31_GSM1900_GPRS (2 Tx slots)_Back_10mm_Ch810

Communication System: PCS; Frequency: 1909.8 MHz;Duty Cycle: 1:4.15
Medium: MSL_1900_150530 Medium parameters used: f = 1909.8 MHz; σ = 1.552 mho/m; ε_r = 54.352; ρ = 1000 kg/m^3
Ambient Temperature：23.6 ℃； Liquid Temperature：22.6 ℃

DASY5 Configuration:
- Probe: EX3DV4 - SN3578; ConvF(7.28, 7.28, 7.28); Calibrated: 2015/3/31;
- Sensor-Surface: 1.4mm (Mechanical Surface Detection)
- Electronics: DAE4 Sn916; Calibrated: 2014/12/29
- Phantom: SAM_Left; Type: QD000P40CD; Serial: TP:1542
- Measurement SW: DASY52, Version 52.8 (2);SEMCAD X Version 14.6.6 (6477)

Configuration/Ch810/Area Scan (61x121x1): Measurement grid: dx=15mm, dy=15mm
Maximum value of SAR (interpolated) = 0.860 mW/g

Configuration/Ch810/Zoom Scan (5x5x7)/Cube 0: Measurement grid: dx=8mm, dy=8mm, dz=5mm
Reference Value = 25.498 V/m; Power Drift = 0.05 dB
Peak SAR (extrapolated) = 1.108 mW/g
SAR(1 g) = 0.672 mW/g; SAR(10 g) = 0.363 mW/g
Maximum value of SAR (measured) = 0.894 mW/g

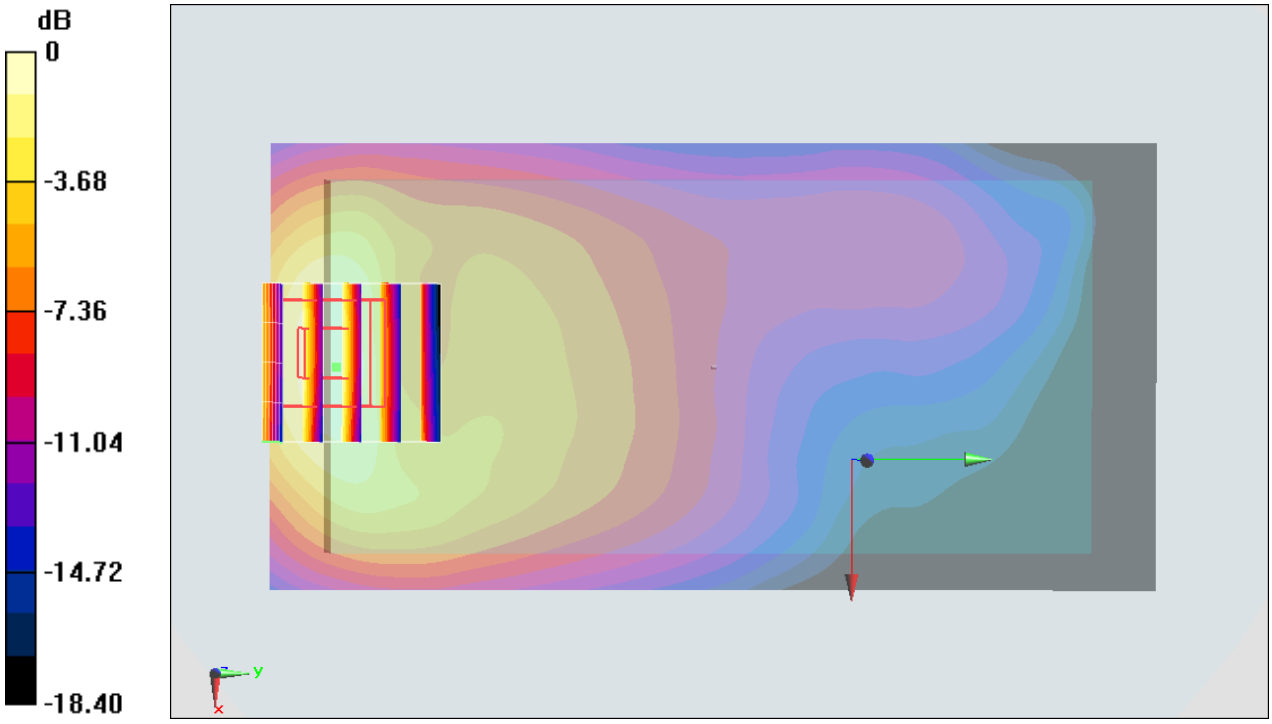

0 dB = 0.894 mW/g = -0.97 dB mW/g

#32_WCDMA Band II_RMC 12.2Kbps_Back_10mm_Ch9262

Communication System: WCDMA; Frequency: 1852.4 MHz;Duty Cycle: 1:1
Medium: MSL_1900_150530 Medium parameters used: f = 1852.4 MHz; σ = 1.485 mho/m; ε_r = 54.519; ρ = 1000 kg/m^3
Ambient Temperature：23.6 ℃； Liquid Temperature：22.6 ℃

DASY5 Configuration:
- Probe: EX3DV4 - SN3578; ConvF(7.28, 7.28, 7.28); Calibrated: 2015/3/31;
- Sensor-Surface: 1.4mm (Mechanical Surface Detection)
- Electronics: DAE4 Sn916; Calibrated: 2014/12/29
- Phantom: SAM_Left; Type: QD000P40CD; Serial: TP:1542
- Measurement SW: DASY52, Version 52.8 (2);SEMCAD X Version 14.6.6 (6477)

Configuration/Ch9262/Area Scan (61x121x1): Measurement grid: dx=15mm, dy=15mm
Maximum value of SAR (interpolated) = 0.932 mW/g

Configuration/Ch9262/Zoom Scan (5x5x7)/Cube 0: Measurement grid: dx=8mm, dy=8mm, dz=5mm
Reference Value = 27.233 V/m; Power Drift = 0.17 dB
Peak SAR (extrapolated) = 1.321 mW/g
SAR(1 g) = 0.797 mW/g; SAR(10 g) = 0.438 mW/g
Maximum value of SAR (measured) = 1.06 mW/g

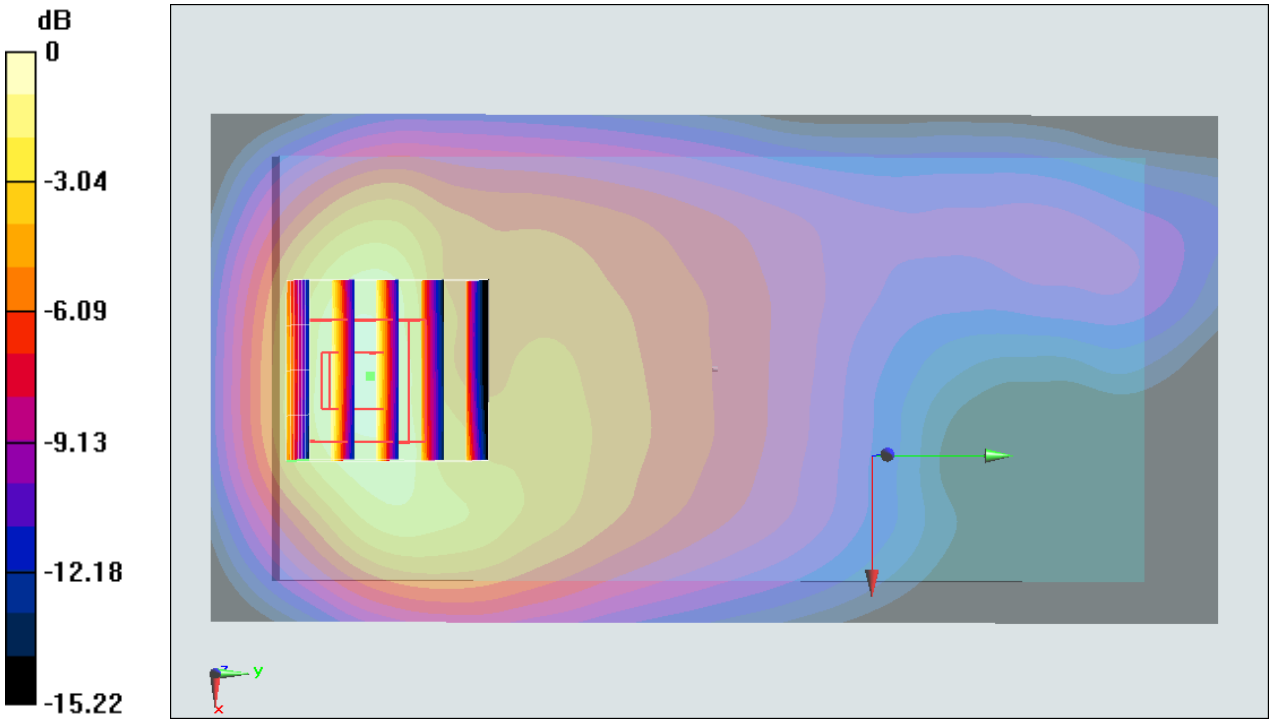

0 dB = 1.06 mW/g = 0.51 dB mW/g

Test Laboratory: Sporton International Inc. SAR/HAC Testing Lab Date: 2015/6/1

#33_LTE Band 12_10M_QPSK_1RB_0offset_Back_10mm_Ch23095

Communication System: LTE; Frequency: 707.5 MHz;Duty Cycle: 1:1
Medium: MSL_750_150601 Medium parameters used: f = 707.5 MHz; σ = 0.929 mho/m; ε_r = 58.26; ρ = 1000 kg/m^3
Ambient Temperature：23.5 ℃； Liquid Temperature：22.5 ℃

DASY5 Configuration:
- Probe: EX3DV4 - SN3697; ConvF(8.83, 8.83, 8.83); Calibrated: 2014/9/29;
- Sensor-Surface: 1.4mm (Mechanical Surface Detection)
- Electronics: DAE4 Sn1388; Calibrated: 2014/9/24
- Phantom: SAM_Right; Type: QD000P40CC; Serial: TP:1383
- Measurement SW: DASY52, Version 52.8 (2);SEMCAD X Version 14.6.6 (6477)

Configuration/Ch23095/Area Scan (71x121x1): Measurement grid: dx=15mm, dy=15mm
Maximum value of SAR (interpolated) = 0.483 mW/g

Configuration/Ch23095/Zoom Scan (5x5x7)/Cube 0: Measurement grid: dx=8mm, dy=8mm, dz=5mm
Reference Value = 23.567 V/m; Power Drift = -0.13 dB
Peak SAR (extrapolated) = 0.566 mW/g
SAR(1 g) = 0.317 mW/g; SAR(10 g) = 0.192 mW/g
Maximum value of SAR (measured) = 0.459 mW/g

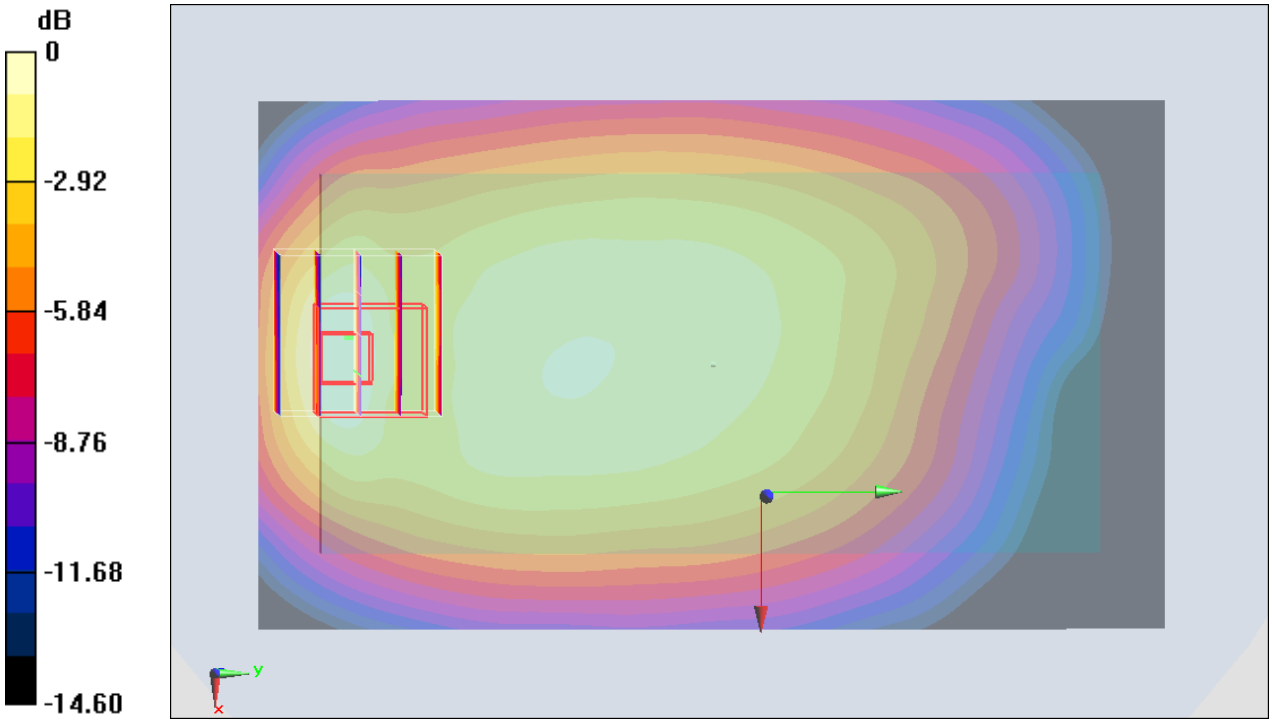

0 dB = 0.459 mW/g = -6.76 dB mW/g

Test Laboratory: Sporton International Inc. SAR/HAC Testing Lab Date: 2015/6/1

#34_LTE Band 17_10M_QPSK_1RB_0offset_Back_10mm_Ch23790

Communication System: LTE; Frequency: 710 MHz;Duty Cycle: 1:1
Medium: MSL_750_150601 Medium parameters used: f = 710 MHz; σ = 0.931 mho/m; ε_r = 58.24; ρ = 1000 kg/m^3
Ambient Temperature：23.5 ℃； Liquid Temperature：22.5 ℃

DASY5 Configuration:
- Probe: EX3DV4 - SN3697; ConvF(8.83, 8.83, 8.83); Calibrated: 2014/9/29;
- Sensor-Surface: 1.4mm (Mechanical Surface Detection)
- Electronics: DAE4 Sn1388; Calibrated: 2014/9/24
- Phantom: SAM_Right; Type: QD000P40CC; Serial: TP:1383
- Measurement SW: DASY52, Version 52.8 (2);SEMCAD X Version 14.6.6 (6477)

Configuration/Ch23790/Area Scan (71x121x1): Measurement grid: dx=15mm, dy=15mm
Maximum value of SAR (interpolated) = 0.535 mW/g

Configuration/Ch23790/Zoom Scan (5x5x7)/Cube 0: Measurement grid: dx=8mm, dy=8mm, dz=5mm
Reference Value = 24.809 V/m; Power Drift = -0.08 dB
Peak SAR (extrapolated) = 0.637 mW/g
SAR(1 g) = 0.349 mW/g; SAR(10 g) = 0.211 mW/g
Maximum value of SAR (measured) = 0.511 mW/g

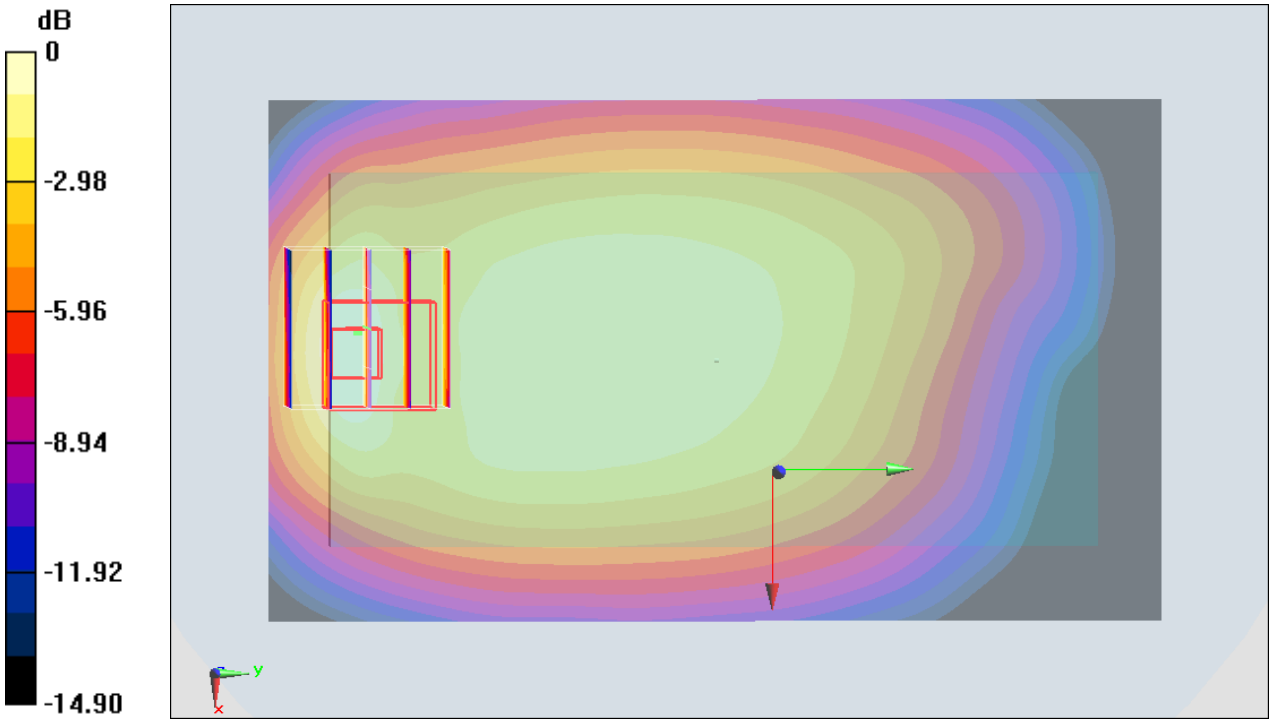

0 dB = 0.511 mW/g = -5.83 dB mW/g

Test Laboratory: Sporton International Inc. SAR/HAC Testing Lab Date: 2015/5/30

#35_LTE Band 7_20M_QPSK_1RB_0offset_Back_10mm_Ch21350

Communication System: LTE; Frequency: 2560 MHz;Duty Cycle: 1:1
Medium: MSL_2600_150530 Medium parameters used: f = 2560 MHz; σ = 2.179 mho/m; ε_r = 51.507; ρ = 1000 kg/m^3
Ambient Temperature：23.5 ℃； Liquid Temperature：22.5 ℃

DASY5 Configuration:
- Probe: EX3DV4 - SN3578; ConvF(6.69, 6.69, 6.69); Calibrated: 2015/3/31;
- Sensor-Surface: 1.4mm (Mechanical Surface Detection)
- Electronics: DAE4 Sn916; Calibrated: 2014/12/29
- Phantom: SAM_Right; Type: QD000P40CC; Serial: TP:1383
- Measurement SW: DASY52, Version 52.8 (2);SEMCAD X Version 14.6.6 (6477)

Configuration/Ch21350/Area Scan (81x151x1): Measurement grid: dx=12mm, dy=12mm
Maximum value of SAR (interpolated) = 0.487 mW/g

Configuration/Ch21350/Zoom Scan (7x7x7)/Cube 0: Measurement grid: dx=5mm, dy=5mm, dz=5mm
Reference Value = 15.477 V/m; Power Drift = -0.07 dB
Peak SAR (extrapolated) = 0.610 mW/g
SAR(1 g) = 0.315 mW/g; SAR(10 g) = 0.173 mW/g
Maximum value of SAR (measured) = 0.494 mW/g

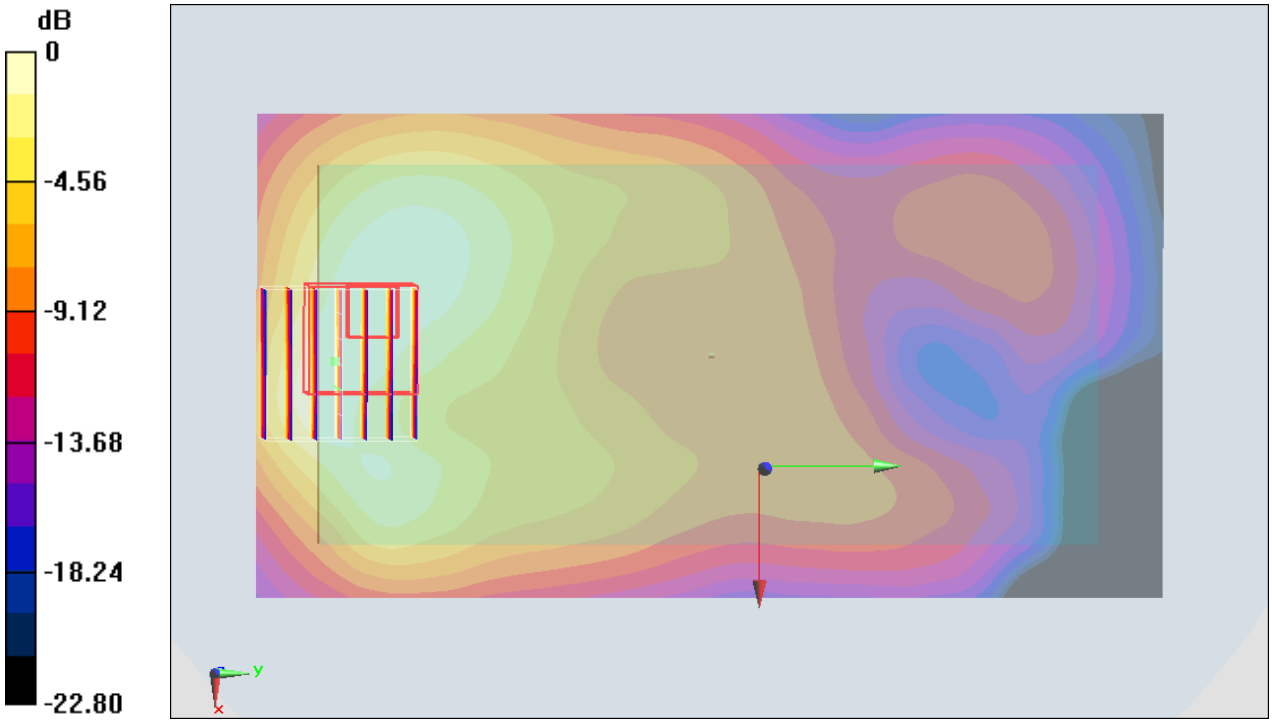

0 dB = 0.494 mW/g = -6.13 dB mW/g

Test Laboratory: Sporton International Inc. SAR/HAC Testing Lab Date: 2015.06.14

#36_WLAN5.2GHz_802.11a_6Mbps_Front 10mm_Ch40

Communication System: WIFI (0); Frequency: 5200 MHz;Duty Cycle: 1:1.059
Medium: MSL_5000_150614 Medium parameters used: f = 5200 MHz; σ = 5.162 mho/m; ε_r = 48.492; ρ = 1000 kg/m^3
Ambient Temperature：23.6 ℃； Liquid Temperature：22.6 ℃

DASY5 Configuration:
- Probe: EX3DV4 - SN7350; ConvF(4.21, 4.21, 4.21); Calibrated: 2015.01.08
- Sensor-Surface: 2mm (Mechanical Surface Detection)
- Electronics: DAE4 Sn905; Calibrated: 2014.07.14
- Phantom: SAM1; Type: SAM; Serial: TP-1479
- Measurement SW: DASY52, Version 52.8 (8); SEMCAD X Version 14.4.5 (3634)

Ch40/Area Scan (101x181x1): Measurement grid: dx=10mm, dy=10mm
Maximum value of SAR (interpolated) = 0.317 mW/g

Ch40/Zoom Scan (8x8x7)/Cube 0: Measurement grid: dx=4mm, dy=4mm, dz=1.4mm
Reference Value = 2.429 V/m; Power Drift = 0.09 dB
Peak SAR (extrapolated) = 0.528 W/kg
SAR(1 g) = 0.189 mW/g; SAR(10 g) = 0.094 mW/g
Maximum value of SAR (measured) = 0.309 mW/g

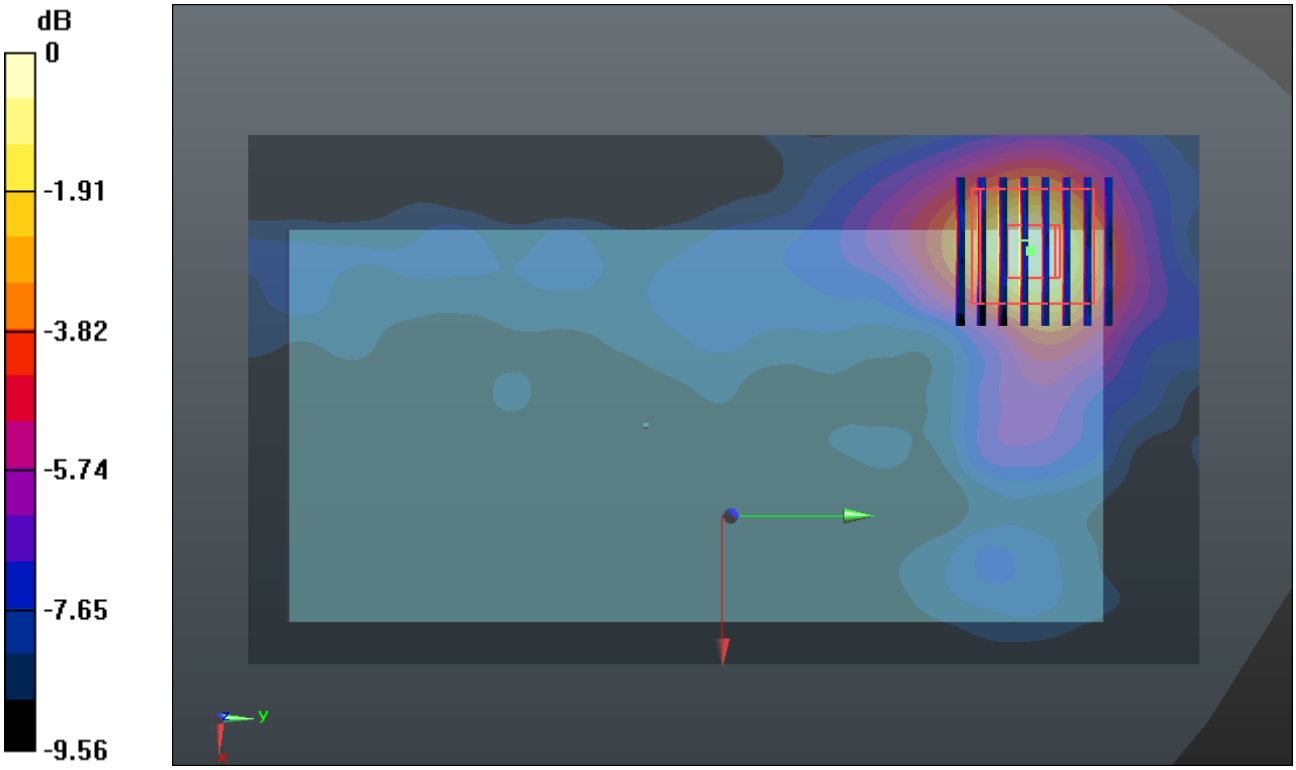

0 dB = 0.310mW/g

Test Laboratory: Sporton International Inc. SAR/HAC Testing Lab Date: 2015.06.14

#37_WLAN5.8GHz_802.11a_6Mbps_Front 10mm_Ch149

Communication System: WIFI (0); Frequency: 5745 MHz;Duty Cycle: 1:1.059
Medium: MSL_5000_150614 Medium parameters used: f = 5745 MHz; σ = 5.919 mho/m; ε_r = 47.376; ρ = 1000 kg/m^3
Ambient Temperature：23.6 ℃； Liquid Temperature：22.6 ℃

DASY5 Configuration:
- Probe: EX3DV4 - SN7350; ConvF(4.21, 4.21, 4.21); Calibrated: 2015.01.08
- Sensor-Surface: 2mm (Mechanical Surface Detection)
- Electronics: DAE4 Sn905; Calibrated: 2014.07.14
- Phantom: SAM1; Type: SAM; Serial: TP-1479
- Measurement SW: DASY52, Version 52.8 (8); SEMCAD X Version 14.4.5 (3634)

Ch149/Area Scan (101x181x1): Measurement grid: dx=10mm, dy=10mm
Maximum value of SAR (interpolated) = 0.726 mW/g

Ch149/Zoom Scan (8x8x7)/Cube 0: Measurement grid: dx=4mm, dy=4mm, dz=1.4mm
Reference Value = 0.276 V/m; Power Drift = -0.09 dB
Peak SAR (extrapolated) = 1.417 W/kg
SAR(1 g) = 0.357 mW/g; SAR(10 g) = 0.119 mW/g
Maximum value of SAR (measured) = 0.705 mW/g

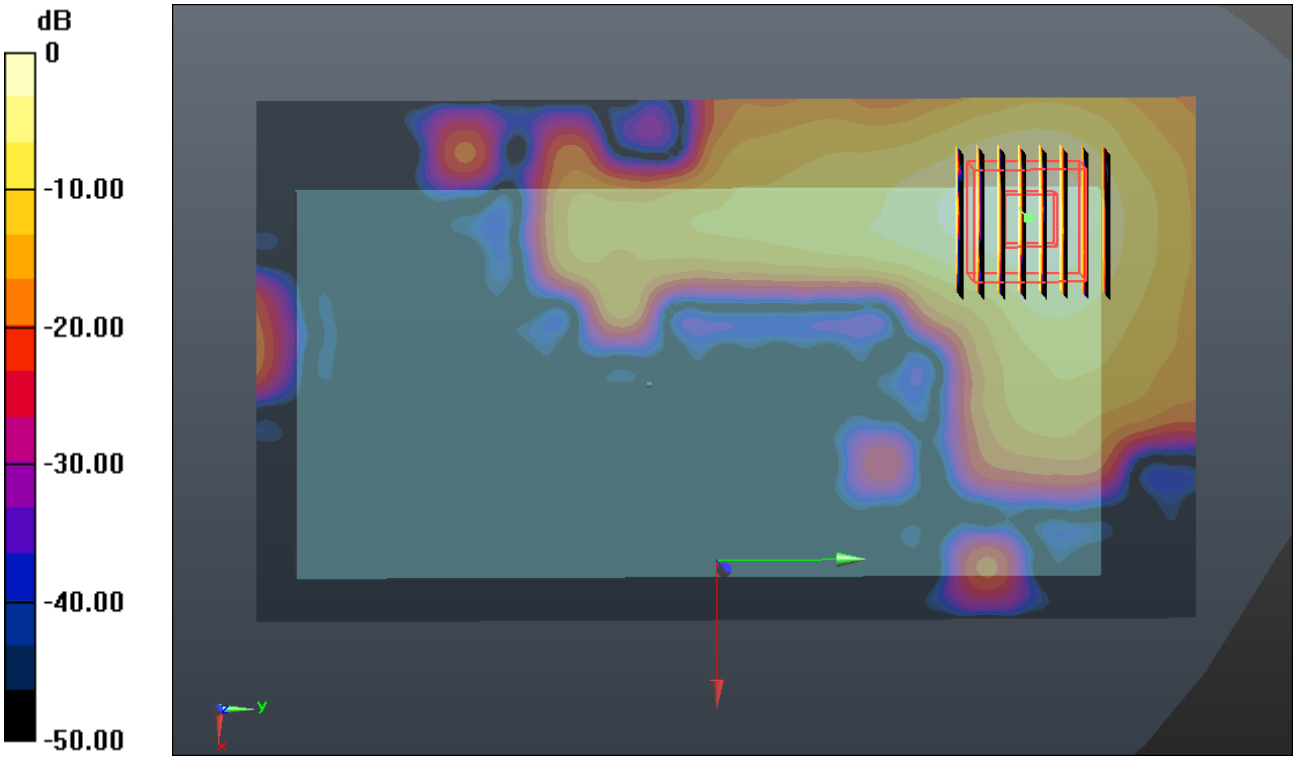

0 dB = 0.700mW/g