FCC SAR Test Report

APPLICANT	:	ZTE CORPORATION
EQUIPMENT	:	CDMA/LTE Ufi
BRAND NAME	:	ZTE
MODEL NAME	:	306ZT
FCC ID	:	SRQ-ZTEMF975S
STANDARD	:	FCC 47 CFR Part 2 (2.1093) ANSI/IEEE C95.1-1992 IEEE 1528-2003

We, SPORTON INTERNATIONAL (XI'AN) INC., would like to declare that the tested sample has been evaluated in accordance with the procedures and had been in compliance with the applicable technical standards.

The test results in this report apply exclusively to the tested model / sample. Without written approval of SPORTON INTERNATIONAL (XI'AN) INC., the test report shall not be reproduced except in full.

Reviewed by: Eric Huang / Deputy Manager

Approved by: Jones Tsai / Manager

Testing Laboratory
2627

SPORTON INTERNATIONAL (XI'AN) INC.
1F, Building A3, No. 39 Chuangye Rd., Xi'an Hi-tech Zone, Shanxi Province, P.R.C.

Table of Contents

1. Statement of Compliance 4
2. Administration Data 5
3. Guidance Standard 5
4. Equipment Under Test (EUT) 6
4.1 General Information 6
4.2 Maximum Tune-up Limit 7
4.3 General LTE SAR Test and Reporting Considerations 11
5. RF Exposure Limits 13
5.1 Uncontrolled Environment 13
5.2 Controlled Environment 13
6. Specific Absorption Rate (SAR) 14
6.1 Introduction 14
6.2 SAR Definition 14
7. System Description and Setup 15
8. Measurement Procedures 16
8.1 Spatial Peak SAR Evaluation 16
8.2 Power Reference Measurement 17
8.3 Area Scan 17
8.4 Zoom Scan 18
8.5 Volume Scan Procedures 18
8.6 Power Drift Monitoring 18
9. Test Equipment List 19
10. System Verification 20
10.1 Tissue Verification 20
10.2 System Performance Check Results 21
11. RF Exposure Positions 22
12. Conducted RF Output Power (Unit: dBm) 23
13. Antenna Location 40
14. SAR Test Results 41
14.1 Body SAR 42
14.2 Repeated SAR Measurement 45
15. Simultaneous Transmission Analysis 46
15.1 Body Exposure Conditions 47
16. Uncertainty Assessment 49
17. References 52
Appendix A. Plots of System Performance Check
Appendix B. Plots of High SAR Measurement
Appendix C. DASY Calibration Certificate
Appendix D. Test Setup Photos

Revision History

REPORT NO.	VERSION	DESCRIPTION	ISSUED DATE
FA461802	Rev. 01	Initial issue of report	Aug. 26, 2014

1. Statement of Compliance

The maximum results of Specific Absorption Rate (SAR) found during testing for **ZTE CORPORATION, CDMA/LTE Ufi, 306ZT** are as follows.

Equipment Class	Frequency Band	Operating Mode	Highest SAR Summary	
			Body 1g SAR (W/kg) Gap(1cm)	Simultaneous Transmission SAR (W/kg)
PCB	CDMA 2000 BC1	Data	1.23	1.54
	LTE Band 26	Data	0.85	
	LTE Band 25	Data	0.73	
	LTE Band 41	Data	1.36	
DTS	WLAN 2.4GHz Band	Data	0.35	1.54
NII	WLAN 5.2GHz Band	Data	0.63	1.47
	WLAN 5.8GHz Band	Data	1.04	
Date of Testing:		Jul 23, 2014 ~ Aug. 18, 2014		

This device is in compliance with Specific Absorption Rate (SAR) for general population/uncontrolled exposure limits (1.6 W/kg) specified in FCC 47 CFR part 2 (2.1093) and ANSI/IEEE C95.1-1992, and had been tested in accordance with the measurement methods and procedures specified in IEEE 1528-2003.

2. Administration Data

Testing Laboratory	
Test Site	SPORTON INTERNATIONAL (XI'AN) INC.
Test Site Location	1F, Building A3, No. 39 Chuangye Rd., Xi'an Hi-tech Zone, Shanxi Province, P. R. C. TEL: +86-029-8860-8767 FAX: +86-029-8860-8791

Applicant	
Company Name	ZTE CORPORATION
Address	ZTE Plaza, Keji Road South, Hi-Tech, Industrial Park, Nanshan District, Shenzhen, Guangdong, 518057, P .R. China

Manufacturer	
Company Name	ZTE CORPORATION
Address	ZTE Plaza, Keji Road South, Hi-Tech, Industrial Park, Nanshan District, Shenzhen, Guangdong, 518057, P. R. China

3. Guidance Standard

The Specific Absorption Rate (SAR) testing specification, method, and procedure for this device is in accordance with the following standards:

- FCC 47 CFR Part 2 (2.1093)
- ANSI/IEEE C95.1-1992
- IEEE 1528-2003
- FCC KDB 865664 D01 SAR Measurement 100 MHz to 6 GHz v01r03
- FCC KDB 865664 D02 SAR Reporting v01r01
- FCC KDB 447498 D01 General RF Exposure Guidance v05r02
- FCC KDB 248227 D01 SAR meas for 802 11abg v01r02
- FCC KDB 644545 D01 Guidance for IEEE 802 11ac v01r02
- FCC KDB 941225 D01 SAR test for 3G devices v02
- FCC KDB 941225 D05 SAR for LTE Devices v02r03
- FCC KDB 941225 D06 Hotspot Mode SAR v01r01

4. Equipment Under Test (EUT)

4.1 General Information

Product Feature & Specification	
Equipment Name	CDMA/LTE Ufi
Brand Name	ZTE
Model Name	306ZT
FCC ID	SRQ-ZTEMF975S
IMEI Code	99000322966703
Wireless Technology and Frequency Range	CDMA 2000 BC1: 1851.25 MHz ~ 1908.75 MHz LTE Band 41 : 2498.5 MHz ~ 2687.5 MHz LTE Band 26: 814.7 MHz ~ 848.3 MHz LTE Band 25: 1850.7 MHz ~ 1914.3 MHz WLAN 2.4GHz Band: 2412 MHz ~ 2462 MHz WLAN 5.2GHz Band: 5180 MHz ~ 5240 MHz WLAN 5.8GHz Band: 5745 MHz ~ 5825 MHz
Mode	・CDMA2000 : 1xRTT/1xEv-Do(Rev.0)/1xEv-Do(Rev.A) ・LTE: QPSK, 16QAM ・802.11a/b/g/n/ac HT20/HT40/VHT20/VHT40/VHT80
HW Version	xw3B
SW Version	306ZTV1.0.0B09
EUT Stage	Identical Prototype

Remark:

1. The above EUT's information was declared by manufacturer. Please refer to the specifications or user's manual for more detailed description.
2. This device 2.4GHz WLAN supports hotspot operation, and 5.8GHz WLAN supports WiFi Direct (GC/GO), and 5.2GHz supports WiFi Direct (GC only).
3. This device has MIMO 2X2 for WLAN 2.4GHz/5GHz, the software configuration control to operate only MIMO. SISO state disabled.

4.2 Maximum Tune-up Limit

Average Power (dBm)	
Band	CDMA2000 BC1
1xRTT RC1 SO55	24.5
1xRTT RC3 SO55	24.5
1xRTT RC3 SO32 (+ F-SCH)	24.5
1xRTT RC3 SO32 (+SCH)	24.5
1xEV-DO Rev 0 (RTAP 153.6kbps)	24.5
1xEV-DO Rev A (RETAP 4096bits)	24.5

LTE Band 25				
Modulation	BW (MHz)	RB size	Target MPR	Target Power (dBm)
QPSK	20	≤ 18	0	23.0
QPSK	20	> 18	0-1	22.0
16QAM	20	≤ 18	0-1	22.0
16QAM	20	> 18	0-2	21.0
QPSK	15	≤ 16	0	23.0
QPSK	15	> 16	0-1	22.0
16QAM	15	≤ 16	0-1	22.0
16QAM	15	> 16	0-2	21.0
QPSK	10	≤ 12	0	23.0
QPSK	10	> 12	0-1	22.0
16QAM	10	≤ 12	0-1	22.0
16QAM	10	> 12	0-2	21.0
QPSK	5	≤ 8	0	23.0
QPSK	5	> 8	0-1	22.0
16QAM	5	≤ 8	0-1	22.0
16QAM	5	> 8	0-2	21.0
QPSK	3	≤ 4	0	23.0
QPSK	3	> 4	0-1	22.0
16QAM	3	≤ 4	0-1	22.0
16QAM	3	> 4	0-2	21.0
QPSK	1.4	≤ 5	0	23.0
QPSK	1.4	> 5	0-1	22.0
16QAM	1.4	≤ 5	0-1	22.0
16QAM	1.4	> 5	0-2	21.0

LTE Band 26				
Modulation	BW (MHz)	RB size	Target MPR	Target Power (dBm)
QPSK	15	≤ 16	0	23.0
QPSK	15	> 16	0-1	22.0
16QAM	15	≤ 16	0-1	22.5
16QAM	15	> 16	0-2	21.5
QPSK	10	≤ 12	0	23.0
QPSK	10	> 12	0-1	22.0
16QAM	10	≤ 12	0-1	22.5
16QAM	10	> 12	0-2	21.5
QPSK	5	≤ 8	0	23.0
QPSK	5	> 8	0-1	22.0
16QAM	5	≤ 8	0-1	22.5
16QAM	5	> 8	0-2	21.5
QPSK	3	≤ 4	0	23.0
QPSK	3	> 4	0-1	22.0
16QAM	3	≤ 4	0-1	22.5
16QAM	3	> 4	0-2	21.5
QPSK	1.4	≤ 5	0	23.0
QPSK	1.4	> 5	0-1	22.0
16QAM	1.4	≤ 5	0-1	22.5
16QAM	1.4	> 5	0-2	21.5

LTE Band 41				
Modulation	BW (MHz)	RB size	Target MPR	Target Power (dBm)
QPSK	20	≤ 18	0	22.0
QPSK	20	> 18	0-1	21.0
16QAM	20	≤ 18	0-1	21.0
16QAM	20	> 18	0-2	20.0
QPSK	15	≤ 16	0	22.0
QPSK	15	> 16	0-1	21.0
16QAM	15	≤ 16	0-1	21.0
16QAM	15	> 16	0-2	20.0
QPSK	10	≤ 12	0	22.0
QPSK	10	> 12	0-1	21.0
16QAM	10	≤ 12	0-1	21.0
16QAM	10	> 12	0-2	20.0
QPSK	5	≤ 8	0	22.0
QPSK	5	> 8	0-1	21.0
16QAM	5	≤ 8	0-1	21.0
16QAM	5	> 8	0-2	20.0

Mode			Maximum Average Power (dBm)
2.4GHz	802.11b	Chain Port 0+1(0)	18.5
		Chain Port 0+1(1)	16.5
		Chain Port 0+1	20.5
	802.11g	Chain Port 0+1(0)	14.5
		Chain Port 0+1(1)	13.0
		Chain Port 0+1	16.5
	802.11n HT20	Chain Port 0+1(0)	14.0
		Chain Port 0+1(1)	12.0
		Chain Port 0+1	16.0
	802.11n HT40	Chain Port 0+1(0)	14.0
		Chain Port 0+1(1)	12.5
		Chain Port 0+1	16.5

Mode				Maximum Average Power (dBm)
5.2GHz	802.11a	Chain Port 0+1(0)		11.0
		Chain Port 0+1(1)		9.5
		Chain Port 0+1		13.0
	802.11n HT20	Chain Port 0+1(0)		10.5
		Chain Port 0+1(1)		9.0
		Chain Port 0+1		12.5
	802.11n HT40	Chain Port 0+1(0)		9.5
		Chain Port 0+1(1)		8.0
		Chain Port 0+1		11.5
5.8GHz	802.11a	Chain Port 0+1(0)		11.5
		Chain Port 0+1(1)		9.5
		Chain Port 0+1		13.5
	802.11n HT20	Chain Port 0+1(0)		10.5
		Chain Port 0+1(1)		9.0
		Chain Port 0+1		13.0
	802.11n HT40	Chain Port 0+1(0)		9.0
		Chain Port 0+1(1)		7.5
		Chain Port 0+1		11.5
5.2GHz	802.11ac-VHT20	Chain Port 0+1(0)		10.5
		Chain Port 0+1(1)		9.5
		Chain Port 0+1		13.0
	802.11ac-VHT40	Chain Port 0+1(0)		8.0
		Chain Port 0+1(1)		7.5
		Chain Port 0+1		11.0
	802.11ac-VHT80	Chain Port 0+1(0)		7.0
		Chain Port 0+1(1)		5.0
		Chain Port 0+1		9.5
5.8GHz	802.11ac-VHT20	Chain Port 0+1(0)		12.5
		Chain Port 0+1(1)	CH 149	10.5
			CH 153	10.5
			CH 157	9.5
			CH 161	9.0
			CH 165	9.5
		Chain Port 0+1	CH 149	14.5
			CH 153	14.5
			CH 157	14.5
			CH 161	13.0
			CH 165	14.5
	802.11ac-VHT40	Chain Port 0+1(0)		8.0
		Chain Port 0+1(1)		7.0
		Chain Port 0+1		10.5
	802.11ac-VHT80	Chain Port 0+1(0)		7.0
		Chain Port 0+1(1)		5.0
		Chain Port 0+1		9.5

4.3 General LTE SAR Test and Reporting Considerations

Summarized necessary items addressed in KDB 941225 D05 v02r03	
FCC ID	SRQ-ZTEMF975S
Equipment Name	CDMA/LTE Ufi
Operating Frequency Range of each LTE transmission band	LTE Band 26: 814.7 MHz ~ 848.3 MHz LTE Band 25: 1850.7 MHz ~ 1914.3 MHz LTE Band 41: 2498.5 MHz ~ 2687.5 MHz
Channel Bandwidth	1.4MHz, 3MHz, 5MHz, 10MHz, 15MHz, 20MHz (LTE Band 25) 1.4MHz, 3MHz, 5MHz, 10MHz, 15MHz (LTE Band 26) 5MHz, 10MHz, 15MHz, 20MHz (LTE Band 41)
uplink modulations used	QPSK and 16QAM
LTE transmitter and antenna implementation (standalone or sharing hardware components / antennas)	A primary antenna is used for LTE and CDMA for transmitting and receiving. LTE and CDMA share the same antenna, and cannot transmit simultaneously A 2nd antenna is used for LTE and CDMA for receiving only
LTE Voice / Data requirements	Data only
LTE MPR permanently built-in by design	Table 6.2.3-1: Maximum Power Reduction (MPR) for Power Class 3

Modulation	Channel bandwidth / Transmission bandwidth (RB)						MPR (dB)
	1.4 MHz	3.0 MHz	5 MHz	10 MHz	15 MHz	20 MHz	
QPSK	> 5	> 4	> 8	> 12	> 16	> 18	≤ 1
16 QAM	≤ 5	≤ 4	≤ 8	≤ 12	≤ 16	≤ 18	≤ 1
16 QAM	> 5	> 4	> 8	> 12	> 16	> 18	≤ 2

LTE A-MPR	In the base station simulator configuration, Network Setting value is set to NS_01 to disable A-MPR during SAR testing and the LTE SAR tests was transmitting on all TTI frames (Maximum TTI)
Spectrum plots for RB configuration	A properly configured base station simulator was used for the SAR and power measurement; therefore, spectrum plots for each RB allocation and offset configuration are not included in the SAR report.

LTE Band 26										
	Bandwidth 1.4 MHz		Bandwidth 3 MHz		Bandwidth 5 MHz		Bandwidth 10 MHz		Bandwidth 15 MHz	
	Ch. #	Freq. (MHz)	Ch. #	Freq. (MHz)	Ch. #	Freq. (MHz)	Ch. #	Freq. (MHz)	Ch. #	Freq. (MHz)
L	26697	814.7	26705	815.5	26715	816.5	26740	819	26765	821.5
M	26865	831.5	26865	831.5	26865	831.5	26865	831.5	26865	831.5
H	20733	848.3	27025	847.5	27015	846.5	26990	844	26965	841.5

LTE Band 25												
	Bandwidth 1.4 MHz		Bandwidth 3 MHz		Bandwidth 5 MHz		Bandwidth 10 MHz		Bandwidth 15 MHz		Bandwidth 20 MHz	
	Ch. #	Freq. (MHz)	Ch. #	Freq. (MHz)	Ch. #	Freq. (MHz)	Ch. #	Freq. (MHz)	Ch. #	Freq. (MHz)	Ch. #	Freq. (MHz)
L	26047	1850.7	26055	1851.5	26065	1852.5	26090	1855	26115	1857.5	26140	1860
M	26340	1880	26340	1880	26340	1880	26340	1880	26340	1880	26340	1880
H	26683	1914.3	26675	1913.5	26665	1912.5	26640	1910	26615	1907.5	26590	1905

LTE Band 41								
	Bandwidth 5 MHz		Bandwidth 10 MHz		Bandwidth 15 MHz		Bandwidth 20 MHz	
	Ch. #	Freq. (MHz)	Ch. #	Freq. (MHz)	Ch. #	Freq. (MHz)	Ch. #	Freq. (MHz)
L	39675	2498.5	39700	2501	39725	2503.5	39750	2506
LM	40148	2545.8	40160	2547	40173	2548.3	40185	2549.5
M	40620	2593	40620	2590	40620	2593	40620	2593
HM	41093	2640.3	41080	2639	41068	2637.8	41055	2636.5
H	41565	2687.5	41540	2685	41515	2682.5	41490	2680

5. RF Exposure Limits

5.1 Uncontrolled Environment

Uncontrolled Environments are defined as locations where there is the exposure of individuals who have no knowledge or control of their exposure. The general population/uncontrolled exposure limits are applicable to situations in which the general public may be exposed or in which persons who are exposed as a consequence of their employment may not be made fully aware of the potential for exposure or cannot exercise control over their exposure. Members of the general public would come under this category when exposure is not employment-related; for example, in the case of a wireless transmitter that exposes persons in its vicinity.

5.2 Controlled Environment

Controlled Environments are defined as locations where there is exposure that may be incurred by persons who are aware of the potential for exposure, (i.e. as a result of employment or occupation). In general, occupational/controlled exposure limits are applicable to situations in which persons are exposed as a consequence of their employment, who have been made fully aware of the potential for exposure and can exercise control over their exposure. The exposure category is also applicable when the exposure is of a transient nature due to incidental passage through a location where the exposure levels may be higher than the general population/uncontrolled limits, but the exposed person is fully aware of the potential for exposure and can exercise control over his or her exposure by leaving the area or by some other appropriate means.

Limits for Occupational/Controlled Exposure (W/kg)

Whole-Body	Partial-Body	Hands, Wrists, Feet and Ankles
0.4	8.0	20.0

Limits for General Population/Uncontrolled Exposure (W/kg)

Whole-Body	Partial-Body	Hands, Wrists, Feet and Ankles
0.08	1.6	4.0

1. Whole-Body SAR is averaged over the entire body, partial-body SAR is averaged over any 1gram of tissue defined as a tissue volume in the shape of a cube. SAR for hands, wrists, feet and ankles is averaged over any 10 grams of tissue defined as a tissue volume in the shape of a cube.

6. Specific Absorption Rate (SAR)

6.1 Introduction

SAR is related to the rate at which energy is absorbed per unit mass in an object exposed to a radio field. The SAR distribution in a biological body is complicated and is usually carried out by experimental techniques or numerical modeling. The standard recommends limits for two tiers of groups, occupational/controlled and general population/uncontrolled, based on a person's awareness and ability to exercise control over his or her exposure. In general, occupational/controlled exposure limits are higher than the limits for general population/uncontrolled.

6.2 SAR Definition

The SAR definition is the time derivative (rate) of the incremental energy (dW) absorbed by (dissipated in) an incremental mass (dm) contained in a volume element (dv) of a given density (ρ). The equation description is as below:

$$\mathbf{SAR} = \frac{\mathbf{d}}{\mathbf{dt}}\left(\frac{\mathbf{dW}}{\mathbf{dm}}\right) = \frac{\mathbf{d}}{\mathbf{dt}}\left(\frac{\mathbf{dW}}{\boldsymbol{\rho}\mathbf{dv}}\right)$$

SAR is expressed in units of Watts per kilogram (W/kg)

$$\mathbf{SAR} = \frac{\boldsymbol{\sigma}|\mathbf{E}|^{\mathbf{2}}}{\boldsymbol{\rho}}$$

Where: σ is the conductivity of the tissue, ρ is the mass density of the tissue and E is the RMS electrical field strength.

7. System Description and Setup

The DASY system used for performing compliance tests consists of the following items:

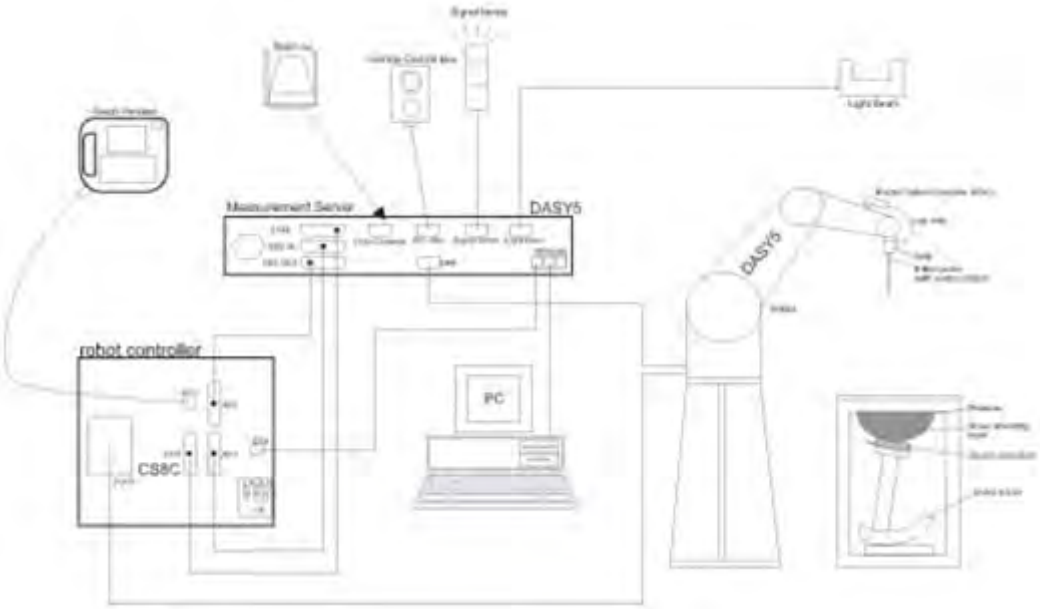

- A standard high precision 6-axis robot with controller, teach pendant and software. An arm extension for accommodating the data acquisition electronics (DAE).
- An isotropic Field probe optimized and calibrated for the targeted measurement.
- A data acquisition electronics (DAE) which performs the signal amplification, signal multiplexing, AD-conversion, offset measurements, mechanical surface detection, collision detection, etc. The unit is battery powered with standard or rechargeable batteries. The signal is optically transmitted to the EOC.
- The Electro-optical converter (EOC) performs the conversion from optical to electrical signals for the digital communication to the DAE. To use optical surface detection, a special version of the EOC is required. The EOC signal is transmitted to the measurement server.
- The function of the measurement server is to perform the time critical tasks such as signal filtering, control of the robot operation and fast movement interrupts.
- The Light Beam used is for probe alignment. This improves the (absolute) accuracy of the probe positioning.
- A computer running WinXP or Win7 and the DASY5 software.
- Remote control and teach pendant as well as additional circuitry for robot safety such as warning lamps, etc.
- The phantom, the device holder and other accessories according to the targeted measurement.

8. Measurement Procedures

The measurement procedures are as follows:

<Conducted power measurement>

(a) For WWAN power measurement, use base station simulator to configure EUT WWAN transmission in conducted connection with RF cable, at maximum power in each supported wireless interface and frequency band.
(b) Read the WWAN RF power level from the base station simulator.
(c) For WLAN power measurement, use engineering software to configure EUT WLAN continuously transmission, at maximum RF power in each supported wireless interface and frequency band
(d) Connect EUT RF port through RF cable to the power meter, and measure WLAN output power

<SAR measurement>

(a) Use base station simulator to configure EUT WWAN transmission in radiated connection, and engineering software to configure EUT WLAN continuously transmission, at maximum RF power, in the highest power channel.
(b) Place the EUT in the positions as Appendix D demonstrates.
(c) Set scan area, grid size and other setting on the DASY software.
(d) Measure SAR results for the highest power channel on each testing position.
(e) Find out the largest SAR result on these testing positions of each band
(f) Measure SAR results for other channels in worst SAR testing position if the reported SAR of highest power channel is larger than 0.8 W/kg

According to the test standard, the recommended procedure for assessing the peak spatial-average SAR value consists of the following steps:

(a) Power reference measurement
(b) Area scan
(c) Zoom scan
(d) Power drift measurement

8.1 Spatial Peak SAR Evaluation

The procedure for spatial peak SAR evaluation has been implemented according to the test standard. It can be conducted for 1g and 10g, as well as for user-specific masses. The DASY software includes all numerical procedures necessary to evaluate the spatial peak SAR value.

The base for the evaluation is a "cube" measurement. The measured volume must include the 1g and 10g cubes with the highest averaged SAR values. For that purpose, the center of the measured volume is aligned to the interpolated peak SAR value of a previously performed area scan.

The entire evaluation of the spatial peak values is performed within the post-processing engine (SEMCAD). The system always gives the maximum values for the 1g and 10g cubes. The algorithm to find the cube with highest averaged SAR is divided into the following stages:

(a) Extraction of the measured data (grid and values) from the Zoom Scan
(b) Calculation of the SAR value at every measurement point based on all stored data (A/D values and measurement parameters)
(c) Generation of a high-resolution mesh within the measured volume
(d) Interpolation of all measured values form the measurement grid to the high-resolution grid
(e) Extrapolation of the entire 3-D field distribution to the phantom surface over the distance from sensor to surface
(f) Calculation of the averaged SAR within masses of 1g and 10g

8.2 Power Reference Measurement

The Power Reference Measurement and Power Drift Measurements are for monitoring the power drift of the device under test in the batch process. The minimum distance of probe sensors to surface determines the closest measurement point to phantom surface. This distance cannot be smaller than the distance of sensor calibration points to probe tip as defined in the probe properties.

8.3 Area Scan

The area scan is used as a fast scan in two dimensions to find the area of high field values, before doing a fine measurement around the hot spot. The sophisticated interpolation routines implemented in DASY software can find the maximum found in the scanned area, within a range of the global maximum. The range (in dB0 is specified in the standards for compliance testing. For example, a 2 dB range is required in IEEE standard 1528 and IEC 62209 standards, whereby 3 dB is a requirement when compliance is assessed in accordance with the ARIB standard (Japan), if only one zoom scan follows the area scan, then only the absolute maximum will be taken as reference. For cases where multiple maximums are detected, the number of zoom scans has to be increased accordingly.

Area scan parameters extracted from FCC KDB 865664 D01v01r03 SAR measurement 100 MHz to 6 GHz.

	≤ 3 GHz	> 3 GHz
Maximum distance from closest measurement point (geometric center of probe sensors) to phantom surface	5 ± 1 mm	½·δ·ln(2) ± 0.5 mm
Maximum probe angle from probe axis to phantom surface normal at the measurement location	30° ± 1°	20° ± 1°
Maximum area scan spatial resolution: Δx_{Area}, Δy_{Area}	≤ 2 GHz: ≤ 15 mm 2 – 3 GHz: ≤ 12 mm	3 – 4 GHz: ≤ 12 mm 4 – 6 GHz: ≤ 10 mm
	When the x or y dimension of the test device, in the measurement plane orientation, is smaller than the above, the measurement resolution must be ≤ the corresponding x or y dimension of the test device with at least one measurement point on the test device.	

8.4 Zoom Scan

Zoom scans are used assess the peak spatial SAR values within a cubic averaging volume containing 1 gram and 10 gram of simulated tissue. The zoom scan measures points (refer to table below) within a cube shoes base faces are centered on the maxima found in a preceding area scan job within the same procedure. When the measurement is done, the zoom scan evaluates the averaged SAR for 1 gram and 10 gram and displays these values next to the job's label.

Zoom scan parameters extracted from FCC KDB 865664 D01v01r03 SAR measurement 100 MHz to 6 GHz.

			≤ 3 GHz	> 3 GHz
Maximum zoom scan spatial resolution: Δx_{Zoom}, Δy_{Zoom}			≤ 2 GHz: ≤ 8 mm 2 – 3 GHz: ≤ 5 mm*	3 – 4 GHz: ≤ 5 mm* 4 – 6 GHz: ≤ 4 mm*
Maximum zoom scan spatial resolution, normal to phantom surface	uniform grid: $\Delta z_{Zoom}(n)$		≤ 5 mm	3 – 4 GHz: ≤ 4 mm 4 – 5 GHz: ≤ 3 mm 5 – 6 GHz: ≤ 2 mm
	graded grid	$\Delta z_{Zoom}(1)$: between 1st two points closest to phantom surface	≤ 4 mm	3 – 4 GHz: ≤ 3 mm 4 – 5 GHz: ≤ 2.5 mm 5 – 6 GHz: ≤ 2 mm
		$\Delta z_{Zoom}(n>1)$: between subsequent points	$\leq 1.5 \cdot \Delta z_{Zoom}(n-1)$	
Minimum zoom scan volume	x, y, z		≥ 30 mm	3 – 4 GHz: ≥ 28 mm 4 – 5 GHz: ≥ 25 mm 5 – 6 GHz: ≥ 22 mm

Note: δ is the penetration depth of a plane-wave at normal incidence to the tissue medium; see draft standard IEEE P1528-2011 for details.

* When zoom scan is required and the *reported* SAR from the *area scan based 1-g SAR estimation* procedures of KDB 447498 is ≤ 1.4 W/kg, ≤ 8 mm, ≤ 7 mm and ≤ 5 mm zoom scan resolution may be applied, respectively, for 2 GHz to 3 GHz, 3 GHz to 4 GHz and 4 GHz to 6 GHz.

8.5 Volume Scan Procedures

The volume scan is used for assess overlapping SAR distributions for antennas transmitting in different frequency bands. It is equivalent to an oversized zoom scan used in standalone measurements. The measurement volume will be used to enclose all the simultaneous transmitting antennas. For antennas transmitting simultaneously in different frequency bands, the volume scan is measured separately in each frequency band. In order to sum correctly to compute the 1g aggregate SAR, the EUT remain in the same test position for all measurements and all volume scan use the same spatial resolution and grid spacing. When all volume scan were completed, the software, SEMCAD postprocessor can combine and subsequently superpose these measurement data to calculating the multiband SAR.

8.6 Power Drift Monitoring

All SAR testing is under the EUT install full charged battery and transmit maximum output power. In DASY measurement software, the power reference measurement and power drift measurement procedures are used for monitoring the power drift of EUT during SAR test. Both these procedures measure the field at a specified reference position before and after the SAR testing. The software will calculate the field difference in dB. If the power drifts more than 5%, the SAR will be retested.

9. Test Equipment List

Manufacturer	Name of Equipment	Type/Model	Serial Number	Calibration	
				Last Cal.	Due Date
SPEAG	835MHz System Validation Kit	D835V2	4d151	Mar. 25.2013	Mar. 23, 2015
SPEAG	1900MHz System Validation Kit	D1900V2	5d170	Mar. 27.2013	Mar. 25, 2015
SPEAG	2450MHz System Validation Kit	D2450V2	908	Mar. 26, 2013	Mar. 24, 2015
SPEAG	2600MHz System Validation Kit	D2600V2	1061	Mar. 26. 2013	Mar. 24, 2015
SPEAG	5000MHz System Validation Kit	D5000V2	1006	Sep. 23, 2013	Sep. 22, 2014
SPEAG	Data Acquisition Electronics	DAE4	1358	Apr. 30, 2014	Apr. 29, 2015
SPEAG	Data Acquisition Electronics	DAE4	1210	May 19, 2014	May 18, 2015
SPEAG	Dosimetric E-Field Probe	EX3DV4	3911	Apr. 22, 2014	Apr. 21, 2015
SPEAG	Dosimetric E-Field Probe	EX3DV4	3857	May 23, 2014	May 22, 2015
SPEAG	SAM Twin Phantom	QD 000 P40 CD	TP-1753	NCR	NCR
SPEAG	SAM Twin Phantom	QD 000 P40 CD	TP-1754	NCR	NCR
SPEAG	SAM Twin Phantom	QD 000 P40 CB	TP-1479	NCR	NCR
SPEAG	Phone Positioner	N/A	N/A	NCR	NCR
Agilent	Wireless Communication Test Set	E5515C	MY52102600	Dec. 30, 2013	Dec. 29, 2014
Anritus	Radio communication analyzer	MT8820C	6201074235	Nov. 05, 2013	Nov. 04, 2014
Agilent	ENA Series Network Analyzer	E5071C	MY46111157	Dec. 30, 2013	Dec. 29, 2014
Agilent	Dielectric Probe Kit	85070E	MY44300751	NCR	NCR
Anritsu	Power Meter	ML2495A	1005002	Feb. 27, 2014	Feb. 26, 2015
Anritsu	Power Sensor	MA2411B	917070	Feb. 27, 2014	Feb. 26, 2015
R&S	Spectrum Analyzer	FSP7	101045	Dec. 30, 2013	Dec. 29, 2014
Agilent	Dual Directional Coupler	778D	50422	Note 1	
Woken	Attenuator	WK0602-XX	N/A	Note 1	
PE	Attenuator	PE7005-10	N/A	Note 1	
PE	Attenuator	PE7005- 3	N/A	Note 1	
AR	Power Amplifier	5S1G4M2	0328767	Note 1	
Mini-Circuits	Power Amplifier	ZVE-3W	162601250	Note 1	
Mini-Circuits	Power Amplifier	ZHL-42W+	13440021344	Note 1	

General Note:

1. Prior to system verification and validation, the path loss from the signal generator to the system check source and the power meter, which includes the amplifier, cable, attenuator and directional coupler, was measured by the network analyzer. The reading of the power meter was offset by the path loss difference between the path to the power meter and the path to the system check source to monitor the actual power level fed to the system check source.
2. Referring to KDB 865664 D01v01r03, the dipole calibration interval can be extended to 3 years with justification. The dipoles are also not physically damaged, or repaired during the interval.
3. The justification data of dipole D835V2, SN: 4d151, D1900V2, SN: 5d170, D2450V2, SN: 908, D2600V2, SN: 1061can be found in appendix C. The return loss is < -20dB, within 20% of prior calibration, the impedance is within 5 ohm of prior calibration.

10. System Verification

10.1 Tissue Verification

The following tissue formulations are provided for reference only as some of the parameters have not been thoroughly verified. The composition of ingredients may be modified accordingly to achieve the desired target tissue parameters required for routine SAR evaluation.

Frequency (MHz)	Water (%)	Sugar (%)	Cellulose (%)	Salt (%)	Preventol (%)	DGBE (%)	Conductivity (σ)	Permittivity (εr)
For Body								
835	50.8	48.2	0	0.9	0.1	0	0.97	55.2
1800, 1900, 2000	70.2	0	0	0.4	0	29.4	1.52	53.3
2450	68.6	0	0	0	0	31.4	1.95	52.7
2600	68.1	0	0	0.1	0	31.8	2.16	52.5

Simulating Liquid for 5GHz, Manufactured by SPEAG

Ingredients	(% by weight)
Water	64~78%
Mineral oil	11~18%
Emulsifiers	9~15%
Additives and Salt	2~3%

<Tissue Dielectric Parameter Check Results>

Frequency (MHz)	Tissue Type	Liquid Temp. (℃)	Conductivity (σ)	Permittivity (ε_r)	Conductivity Target (σ)	Permittivity Target (ε_r)	Delta (σ) (%)	Delta (ε_r) (%)	Limit (%)	Date
835	Body	22.6	0.974	54.204	0.97	55.2	0.41	-1.80	±5	Jul. 28, 2014
1900	Body	22.6	1.528	53.974	1.52	53.3	0.53	1.26	±5	Jul. 23, 2014
2450	Body	22.6	1.939	53.980	1.95	52.7	-0.56	2.43	±5	Jul. 25, 2014
2600	Body	22.7	2.209	51.123	2.16	52.50	2.27	-2.62	±5	Aug. 13, 2014
5200	Body	22.6	5.297	49.185	5.30	49.00	-0.06	0.38	±5	Aug. 18, 2014
5800	Body	22.6	6.127	47.784	6.00	48.20	2.12	-0.86	±5	Aug. 18, 2014

10.2 System Performance Check Results

Comparing to the original SAR value provided by SPEAG, the verification data should be within its specification of 10 %. Below table shows the target SAR and measured SAR after normalized to 1W input power. The table below indicates the system performance check can meet the variation criterion and the plots can be referred to Appendix A of this report.

Date	Frequency (MHz)	Tissue Type	Input Power (mW)	Dipole S/N	Probe S/N	DAE S/N	Measured SAR (W/kg)	Targeted SAR (W/kg)	Normalized SAR (W/kg)	Deviation (%)
Jul. 28, 2014	835	Body	250	4d151	3911	1358	2.33	9.43	9.32	-1.17
Jul. 23, 2014	1900	Body	250	5d170	3911	1358	9.88	41.20	39.52	-4.08
Jul. 25, 2014	2450	Body	250	908	3911	1358	13.30	50.40	53.2	5.56
Aug. 13, 2014	2600	Body	250	1061	3857	1210	13.40	55.60	53.6	-3.60
Aug. 18, 2014	5200	Body	100	1006	3857	1210	7.24	71.50	72.4	1.26
Aug. 18, 2014	5800	Body	100	1006	3857	1210	7.08	72.30	70.8	-2.07

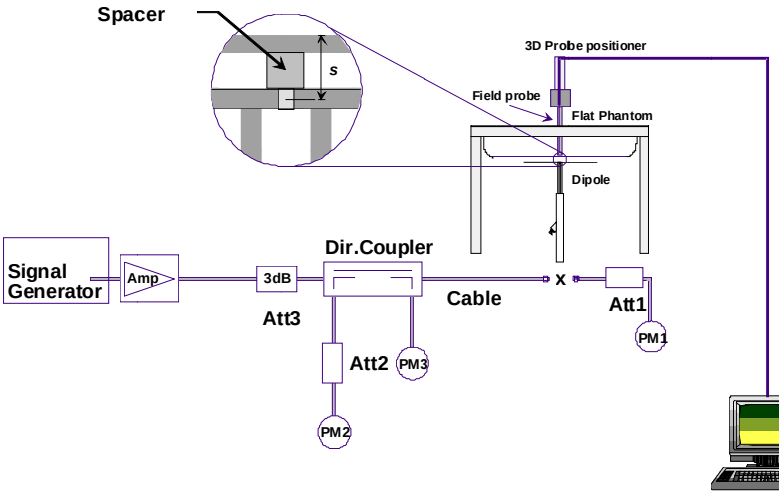

Fig 8.3.1 System Performance Check Setup

Fig 8.3.2 Setup Photo

11. RF Exposure Positions

11.1 Body Position

(a) To position the device parallel to the phantom surface with all sides and either keypad up or down.
(b) To adjust the device parallel to the flat phantom.
(c) To adjust the distance between the device and the flat phantom to 1 cm.

<EUT Setup Photos>

Please refer to Appendix D for the test setup photos.

12. Conducted RF Output Power (Unit: dBm)

<CDMA2000 Conducted Power>

General Note:
Per KDB 941225 D01v02, in Hotspot mode EUT is treated as data device and SAR is tested with Ev-Do Rev 0 (RTAP 153.6kbps). If 1xRTT and Ev-Do Rev A (RETAP 4096 bits) power is less than 1/4dB higher than Re v0, SAR tests with those settings are not necessary.

Band	CDMA2000 BC1		
Channel	25	600	1175
Frequency (MHz)	1851.25	1880.00	1908.75
1xRTT RC1 SO55	23.69	23.84	24.05
1xRTT RC3 SO55	23.69	23.91	24.14
1xRTT RC3 SO32(+ F-SCH)	23.70	23.92	24.18
1xRTT RC3 SO32(+SCH)	23.67	23.93	**24.20**
1xEVDO RTAP 153.6Kbps	23.71	23.79	24.10
1xEVDO RETAP 4096Bits	23.65	23.68	24.01

<LTE Conducted Power>

General Note:

1. Anritsu MT8820C base station simulator was used to setup the connection with EUT; the frequency band, channel bandwidth, RB allocation configuration, modulation type are set in the base station simulator to configure EUT transmitting at maximum power and at different configurations which are requested to be reported to FCC, for conducted power measurement and SAR testing.
2. Per KDB 941225 D05v02r03, when a properly configured base station simulator is used for the SAR and power measurements, spectrum plots for each RB allocation and offset configuration is not required.
3. Per KDB 941225 D05v02r03, start with the largest channel bandwidth and measure SAR for QPSK with 1 RB allocation, using the RB offset and required test channel combination with the highest maximum output power for RB offsets at the upper edge, middle and lower edge of each required test channel.
4. Per KDB 941225 D05v02r03, 50% RB allocation for QPSK SAR testing follows 1RB QPSK allocation procedure.
5. Per KDB 941225 D05v02r03, For QPSK with 100% RB allocation, SAR is not required when the highest maximum output power for 100 % RB allocation is less than the highest maximum output power in 50% and 1 RB allocations and the highest reported SAR for 1 RB and 50% RB allocation are ≤ 0.8 W/kg. Otherwise, SAR is measured for the highest output power channel; and if the reported SAR is > 1.45 W/kg, the remaining required test channels must also be tested.
6. Per KDB 941225 D05v02r03, 16QAM output power for each RB allocation configuration is > not ½ dB higher than the same configuration in QPSK and the reported SAR for the QPSK configuration is ≤ 1.45 W/kg; Per KDB 941225 D05v02r03, 16QAM SAR testing is not required.
7. Per KDB 941225 D05v02r03, Smaller bandwidth output power for each RB allocation configuration is > not ½ dB higher than the same configuration in the largest supported bandwidth, and the reported SAR for the largest supported bandwidth is ≤ 1.45 W/kg; Per KDB 941225 D05v02r03, smaller bandwidth SAR testing is not required.

<LTE Band 26>

BW [MHz]	Modulation	RB Size	RB Offset	Power Low Ch. / Freq.	Power Middle Ch. / Freq.	Power High Ch. / Freq.	Tune up Limit (dBm)	MPR (dB)
Channel				26765	26865	26965		
Frequency (MHz)				821.5	831.5	841.5		
15	QPSK	1	0	**22.44**	22.09	22.11	23.0	0
15	QPSK	1	37	22.10	21.94	21.89		
15	QPSK	1	74	22.10	22.00	21.72		
15	QPSK	36	0	20.92	21.10	20.98	22.0	0-1
15	QPSK	36	18	20.99	20.99	21.00		
15	QPSK	36	37	21.05	20.96	20.94		
15	QPSK	75	0	20.74	20.75	20.55		
15	16QAM	1	0	22.18	22.01	22.00	22.5	0-1
15	16QAM	1	37	22.32	22.02	21.98		
15	16QAM	1	74	22.40	21.99	21.85		
15	16QAM	36	0	20.98	20.87	21.03	21.5	0-2
15	16QAM	36	18	21.09	20.73	21.08		
15	16QAM	36	37	21.11	20.57	21.00		
15	16QAM	75	0	20.80	20.44	20.65		
Channel				26740	26865	26990	Tune up Limit (dBm)	MPR (dB)
Frequency (MHz)				819	831.5	844		
10	QPSK	1	0	22.12	22.06	21.97	23.0	0
10	QPSK	1	24	21.90	21.91	21.84		
10	QPSK	1	49	21.98	21.81	21.51		
10	QPSK	25	0	20.67	20.74	20.98	22.0	0-1
10	QPSK	25	12	20.66	20.73	20.91		
10	QPSK	25	24	20.85	20.60	20.80		
10	QPSK	50	0	20.65	20.68	20.83		
10	16QAM	1	0	21.54	22.03	21.85	22.5	0-1
10	16QAM	1	24	21.86	22.00	21.81		
10	16QAM	1	49	22.00	21.82	21.40		
10	16QAM	25	0	20.72	20.87	21.04	21.5	0-2
10	16QAM	25	12	20.67	20.78	20.95		
10	16QAM	25	24	20.79	20.66	20.80		
10	16QAM	50	0	20.65	20.74	20.85		
Channel				26715	26865	27015	Tune up Limit (dBm)	MPR (dB)
Frequency (MHz)				816.5	831.5	846.5		
5	QPSK	1	0	22.16	22.09	22.04	23.0	0
5	QPSK	1	12	22.12	21.99	21.96		
5	QPSK	1	24	21.96	21.90	21.60		
5	QPSK	12	0	21.20	21.05	20.89	22.0	0-1
5	QPSK	12	6	21.00	21.06	20.79		
5	QPSK	12	11	20.95	20.91	20.64		
5	QPSK	25	0	21.03	21.04	20.70		
5	16QAM	1	0	21.39	22.05	22.02	22.5	0-1
5	16QAM	1	12	22.08	22.00	22.00		
5	16QAM	1	24	21.98	21.93	21.65		
5	16QAM	12	0	21.02	21.20	20.89	21.5	0-2
5	16QAM	12	6	21.01	21.19	20.81		
5	16QAM	12	11	20.99	21.05	20.64		
5	16QAM	25	0	20.96	21.07	20.64		

Channel				26705	26865	27025	Tune up Limit (dBm)	MPR (dB)
Frequency (MHz)				815.5	831.5	847.5		
3	QPSK	1	0	22.19	22.08	21.83	23.0	0
3	QPSK	1	7	22.12	21.83	21.43		
3	QPSK	1	14	22.00	21.78	21.33		
3	QPSK	8	0	21.22	21.05	20.66	22.0	0-1
3	QPSK	8	4	21.20	21.00	20.55		
3	QPSK	8	7	20.96	20.88	20.43		
3	QPSK	15	0	21.10	21.00	20.55		
3	16QAM	1	0	22.05	22.06	21.84	22.5	0-1
3	16QAM	1	7	22.04	22.02	21.56		
3	16QAM	1	14	22.00	21.98	21.42		
3	16QAM	8	0	20.76	21.16	20.69	21.5	0-2
3	16QAM	8	4	21.14	21.14	20.59		
3	16QAM	8	7	21.00	21.01	20.21		
3	16QAM	15	0	20.95	21.10	20.51		
Channel				26697	26865	27033	Tune up Limit (dBm)	MPR (dB)
Frequency (MHz)				814.7	831.5	848.3		
1.4	QPSK	1	0	22.13	22.05	21.36	23.0	0
1.4	QPSK	1	2	22.14	21.84	21.27		
1.4	QPSK	1	5	22.13	21.75	21.23		
1.4	QPSK	3	0	22.11	21.66	21.31		
1.4	QPSK	3	1	22.10	21.60	21.30		
1.4	QPSK	3	2	22.02	21.58	21.27		
1.4	QPSK	6	0	21.15	20.58	20.29	22.0	0-1
1.4	16QAM	1	0	21.83	22.03	21.31	22.5	0-1
1.4	16QAM	1	2	21.89	22.01	21.18		
1.4	16QAM	1	5	21.88	21.98	21.11		
1.4	16QAM	3	0	21.39	21.90	21.21		
1.4	16QAM	3	1	21.58	21.84	21.24		
1.4	16QAM	3	2	21.69	21.80	21.19		
1.4	16QAM	6	0	20.70	20.53	20.55	21.5	0-2

<LTE Band 25>

BW [MHz]	Modulation	RB Size	RB Offset	Power Low Ch. / Freq.	Power Middle Ch. / Freq.	Power High Ch. / Freq.	Tune up Limit (dBm)	MPR (dB)
Channel				26140	26340	26590		
Frequency (MHz)				1860	1880	1905		
20	QPSK	1	0	**21.93**	21.89	21.83	23.0	0
20	QPSK	1	49	21.56	21.77	21.72		
20	QPSK	1	99	21.68	21.71	21.54		
20	QPSK	50	0	20.69	20.82	20.82	22.0	0-1
20	QPSK	50	24	20.76	20.84	20.87		
20	QPSK	50	49	20.65	20.83	20.79		
20	QPSK	100	0	20.73	20.82	20.82		
20	16QAM	1	0	21.90	21.86	21.81	22.0	0-1
20	16QAM	1	49	21.47	21.46	21.59		
20	16QAM	1	99	21.84	21.82	21.30		
20	16QAM	50	0	20.40	20.77	20.77	21.0	0-2
20	16QAM	50	24	20.58	20.69	20.63		
20	16QAM	50	49	20.73	20.76	20.63		
20	16QAM	100	0	20.66	20.79	20.69		
Channel				26115	26340	26615	Tune up Limit (dBm)	MPR (dB)
Frequency (MHz)				1857.5	1880	1907.5		
15	QPSK	1	0	21.89	21.75	21.78	23.0	0
15	QPSK	1	37	21.39	21.74	21.69		
15	QPSK	1	74	21.50	21.71	21.65		
15	QPSK	36	0	20.73	20.70	20.80	22.0	0-1
15	QPSK	36	18	20.62	20.82	20.72		
15	QPSK	36	37	20.62	20.78	20.65		
15	QPSK	75	0	20.65	20.79	20.68		
15	16QAM	1	0	21.83	21.66	21.69	22.0	0-1
15	16QAM	1	37	21.25	21.64	21.66		
15	16QAM	1	74	21.63	21.32	21.50		
15	16QAM	36	0	20.27	20.72	20.57	21.0	0-2
15	16QAM	36	18	20.28	20.61	20.62		
15	16QAM	36	37	20.59	20.59	20.64		
15	16QAM	75	0	20.47	20.71	20.52		
Channel				26090	26340	26640	Tune up Limit (dBm)	MPR (dB)
Frequency (MHz)				1855	1880	1910		
10	QPSK	1	0	21.62	21.77	21.60	23.0	0
10	QPSK	1	24	21.51	21.71	21.53		
10	QPSK	1	49	21.46	21.70	21.50		
10	QPSK	25	0	20.74	20.65	20.68	22.0	0-1
10	QPSK	25	12	20.63	20.78	20.60		
10	QPSK	25	24	20.53	20.74	20.67		
10	QPSK	50	0	20.50	20.64	20.65		
10	16QAM	1	0	21.60	21.68	21.53	22.0	0-1
10	16QAM	1	24	21.24	21.67	21.47		
10	16QAM	1	49	21.40	21.53	20.97		
10	16QAM	25	0	20.30	20.68	20.58	21.0	0-2
10	16QAM	25	12	20.20	20.59	20.52		
10	16QAM	25	24	20.21	20.51	20.47		
10	16QAM	50	0	20.15	20.47	20.57		

Channel				26065	26340	26665	Tune up Limit (dBm)	MPR (dB)
Frequency (MHz)				1852.5	1880	1912.5		
5	QPSK	1	0	21.65	21.79	21.59	23.0	0
5	QPSK	1	12	21.50	21.66	21.52		
5	QPSK	1	24	21.52	21.68	21.56		
5	QPSK	12	0	20.68	20.71	20.58	22.0	0-1
5	QPSK	12	6	20.70	20.77	20.74		
5	QPSK	12	11	20.69	20.71	20.71		
5	QPSK	25	0	20.73	20.73	20.68		
5	16QAM	1	0	21.56	21.74	21.56	22.0	0-1
5	16QAM	1	12	21.14	21.61	21.16		
5	16QAM	1	24	21.54	21.67	20.96		
5	16QAM	12	0	20.32	20.67	20.57	21.0	0-2
5	16QAM	12	6	20.39	20.58	20.45		
5	16QAM	12	11	20.22	20.48	20.18		
5	16QAM	25	0	20.31	20.57	20.38		
Channel				26055	26340	26675	Tune up Limit (dBm)	MPR (dB)
Frequency (MHz)				1851.5	1880	1913.5		
3	QPSK	1	0	21.70	21.77	21.55	23.0	0
3	QPSK	1	7	21.57	21.70	21.52		
3	QPSK	1	14	21.57	21.64	21.54		
3	QPSK	8	0	20.57	20.70	20.58	22.0	0-1
3	QPSK	8	4	20.66	20.76	20.66		
3	QPSK	8	7	20.64	20.70	20.63		
3	QPSK	15	0	20.64	20.72	20.65		
3	16QAM	1	0	21.69	21.74	21.52	22.0	0-1
3	16QAM	1	7	21.23	21.73	21.29		
3	16QAM	1	14	21.60	21.65	21.01		
3	16QAM	8	0	20.33	20.60	20.29	21.0	0-2
3	16QAM	8	4	20.33	20.59	20.22		
3	16QAM	8	7	20.37	20.59	20.14		
3	16QAM	15	0	20.37	20.45	20.21		
Channel				26047	26340	26683	Tune up Limit (dBm)	MPR (dB)
Frequency (MHz)				1850.7	1880	1914.3		
1.4	QPSK	1	0	21.66	21.81	21.49	23.0	0
1.4	QPSK	1	2	21.54	21.67	21.40		
1.4	QPSK	1	5	21.46	21.59	21.45		
1.4	QPSK	3	0	21.47	21.63	21.34		
1.4	QPSK	3	1	21.53	21.66	21.46		
1.4	QPSK	3	2	21.47	21.70	21.44		
1.4	QPSK	6	0	20.49	20.66	20.52	22.0	0-1
1.4	16QAM	1	0	21.62	21.74	21.09	22.0	0-1
1.4	16QAM	1	2	21.61	21.53	21.02		
1.4	16QAM	1	5	21.25	21.45	20.87		
1.4	16QAM	3	0	21.22	21.49	20.90		
1.4	16QAM	3	1	21.33	21.36	20.92		
1.4	16QAM	3	2	21.30	21.32	20.75		
1.4	16QAM	6	0	20.21	20.47	19.95	21.0	0-2

TDD LTE configuration setup for SAR measurement

SAR was tested with a fixed periodic duty factor according to the highest transmission duty factor implemented for the device and supported by 3GPP.

a) 3GPP TS 36.211 section 4.2 for Type 2 Frame Structure and Table 4.2-2 for uplink-downlink configurations.
b) "special subframe S" contains both uplink and downlink transmissions, it has been taken into consideration to determine the transmission duty factor according to the worst case uplink and downlink cyclic prefix requirements for UpPTS.
c) Establishing connections with base station simulators ensure a consistent means for testing SAR and recommended for evaluating SAR. The Anritsu MT8820C (firmware: #22.52#004) was used for LTE output power measurements and SAR testing.

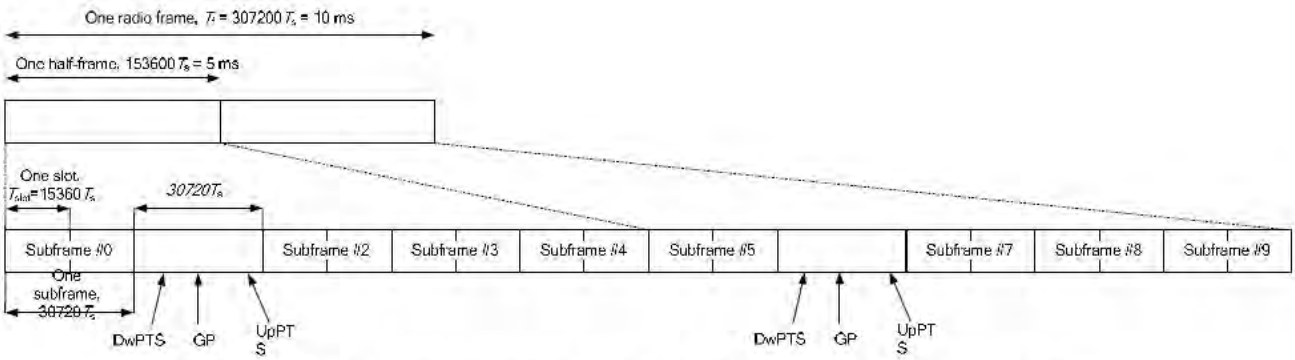

Figure 4.2-1: Frame structure type 2 (for 5 ms switch-point periodicity)

Table 4.2-2: Uplink-downlink configurations.

Uplink-downlink configuration	Downlink-to-Uplink Switch-point periodicity	Subframe number									
		0	1	2	3	4	5	6	7	8	9
0	5 ms	D	S	U	U	U	D	S	U	U	U
1	5 ms	D	S	U	U	D	D	S	U	U	D
2	5 ms	D	S	U	D	D	D	S	U	D	D
3	10 ms	D	S	U	U	U	D	D	D	D	D
4	10 ms	D	S	U	U	D	D	D	D	D	D
5	10 ms	D	S	U	D	D	D	D	D	D	D
6	5 ms	D	S	U	U	U	D	S	U	U	D

Table 4.2-1: Configuration of special subframe (lengths of DwPTS/GP/UpPTS).

Special subframe configuration	Normal cyclic prefix in downlink			Extended cyclic prefix in downlink		
	DwPTS	UpPTS		DwPTS	UpPTS	
		Normal cyclic prefix in uplink	Extended cyclic prefix in uplink		Normal cyclic prefix in uplink	Extended cyclic prefix in uplink
0	$6592 \cdot T_s$	$2192 \cdot T_s$	$2560 \cdot T_s$	$7680 \cdot T_s$	$2192 \cdot T_s$	$2560 \cdot T_s$
1	$19760 \cdot T_s$			$20480 \cdot T_s$		
2	$21952 \cdot T_s$			$23040 \cdot T_s$		
3	$24144 \cdot T_s$			$25600 \cdot T_s$		
4	$26336 \cdot T_s$			$7680 \cdot T_s$	$4384 \cdot T_s$	$5120 \cdot T_s$
5	$6592 \cdot T_s$	$4384 \cdot T_s$	$5120 \cdot T_s$	$20480 \cdot T_s$		
6	$19760 \cdot T_s$			$23040 \cdot T_s$		
7	$21952 \cdot T_s$			$12800 \cdot T_s$		
8	$24144 \cdot T_s$			-	-	-
9	$13168 \cdot T_s$			-	-	-

Special subframe (30720·T_s): Normal cyclic prefix in downlink (UpPTS)			
	Special subframe configuration	Normal cyclic prefix in uplink	Extended cyclic prefix in uplink
Uplink duty factor in one special subframe	0~4	7.13%	8.33%
	5~9	14.3%	16.7%

Special subframe(30720·T_s): Extended cyclic prefix in downlink (UpPTS)			
	Special subframe configuration	Normal cyclic prefix in uplink	Extended cyclic prefix in uplink
Uplink duty factor in one special subframe	0~3	7.13%	8.33%
	4~7	14.3%	16.7%

The highest duty factor is resulted from:

i. uplink-downlink configuration: 0. In a half-frame consisted of 5 subfames, uplink operation is in 3 uplink subframes and 1 special subframe.

ii. special subframe configuration: 5-9 for normal cyclic prefix in downlink, 4-7 for extended cyclic prefix in downlink

iii. for special subframe with extended cyclic prefix in uplink, the total uplink duty factor in one half-frame is:

(3+0.167)/5 = 63.3%

iv. for special subframe with normal cyclic prefix in uplink, the total uplink duty factor in one half-frame is:

(3+0.143)/5 = 62.9%

v. Considering the theoretical duty cycle of 63.3% for extended cyclic prefix in the uplink, and the theoretical duty cycle of 62.9% for normal cyclic prefix in uplink, a scaling factor of extended cyclic prefix 63.3%/62.9% = 1.006 is applied to scale-up the measured SAR result. The scaled TDD LTE SAR = (measured SAR) * (scaling factor for extended cyclic prefix).

<LTE Band 41>

BW [MHz]	Modulation	RB Size	RB Offset	Power Low Ch. / Freq.	Power Low Middle Ch. / Freq.	Power Middle Ch. / Freq.	Power Middle High Ch. / Freq.	Power High Ch. / Freq.	Tune up Limit (dBm)	MPR (dB)
Channel				39750	40185	40620	41055	41490		
Frequency (MHz)				2506	2549.5	2593	2636.5	2680		
20	QPSK	1	0	21.48	21.35	21.67	21.30	21.45	22.0	0
20	QPSK	1	49	21.30	21.29	21.57	21.12	21.34		
20	QPSK	1	99	21.22	20.93	21.51	20.95	21.38		
20	QPSK	50	0	20.40	20.26	20.57	20.07	20.21	21.0	0-1
20	QPSK	50	24	20.32	20.17	20.55	20.26	20.32		
20	QPSK	50	49	20.26	19.88	20.48	20.10	20.01		
20	QPSK	100	0	20.35	20.16	20.54	20.15	20.27		
20	16QAM	1	0	20.68	20.50	20.87	20.57	20.60	21.0	0-1
20	16QAM	1	49	20.52	20.43	20.77	20.37	20.51		
20	16QAM	1	99	20.32	20.07	20.70	20.16	20.57		
20	16QAM	50	0	19.59	19.38	19.70	19.23	19.38	20.0	0-2
20	16QAM	50	24	19.48	19.33	19.68	19.42	19.49		
20	16QAM	50	49	19.45	19.04	19.62	19.26	19.16		
20	16QAM	100	0	19.51	19.31	19.66	19.27	19.39		
Channel				39725	40173	40620	41068	41515	Tune up Limit (dBm)	MPR (dB)
Frequency (MHz)				2503.5	2548.3	2593	2637.8	2682.5		
15	QPSK	1	0	21.17	21.29	**21.80**	21.36	21.48	22.0	0
15	QPSK	1	37	21.22	21.09	21.67	21.17	21.39		
15	QPSK	1	74	21.11	20.99	21.69	21.13	21.49		
15	QPSK	36	0	20.26	20.21	20.59	20.32	20.36	21.0	0-1
15	QPSK	36	18	20.30	20.11	20.60	20.37	20.15		
15	QPSK	36	37	20.22	19.95	20.54	20.16	20.17		
15	QPSK	75	0	20.31	20.17	20.58	20.23	20.43		
15	16QAM	1	0	20.42	20.58	20.93	20.59	20.65	21.0	0-1
15	16QAM	1	37	20.48	20.35	20.81	20.40	20.59		
15	16QAM	1	74	20.34	20.22	20.85	20.35	20.71		
15	16QAM	36	0	19.41	19.34	19.69	19.42	19.44	20.0	0-2
15	16QAM	36	18	19.44	19.24	19.70	19.37	19.21		
15	16QAM	36	37	19.36	19.09	19.64	19.26	19.24		
15	16QAM	75	0	19.52	19.31	19.71	19.38	19.54		

BW [MHz]	Modulation	RB Size	RB Offset	Power Low Ch. / Freq.	Power Low Middle Ch. / Freq.	Power Middle Ch. / Freq.	Power Middle High Ch. / Freq.	Power High Ch. / Freq.	Tune up Limit (dBm)	MPR (dB)
Channel				39700	40160	40620	41080	41540		
Frequency (MHz)				2501	2547	2593	2639	2685		
10	QPSK	1	0	20.98	21.13	21.47	21.18	21.31	22.0	0
10	QPSK	1	24	21.18	21.26	21.61	21.17	21.48		
10	QPSK	1	49	21.14	20.88	21.28	21.00	21.29		
10	QPSK	25	0	20.00	20.15	20.51	20.22	20.14	21.0	0-1
10	QPSK	25	12	20.19	20.16	20.58	20.17	20.20		
10	QPSK	25	24	20.19	19.95	20.48	20.07	20.19		
10	QPSK	50	0	20.11	20.10	20.51	20.13	20.12		
10	16QAM	1	0	20.11	20.26	20.68	20.19	20.48	21.0	0-1
10	16QAM	1	24	20.38	20.40	20.81	20.17	20.69		
10	16QAM	1	49	20.32	19.99	20.46	20.00	20.48		
10	16QAM	25	0	19.20	19.26	19.65	19.23	19.23	20.0	0-2
10	16QAM	25	12	19.41	19.28	19.72	19.20	19.33		
10	16QAM	25	24	19.39	19.07	19.62	19.24	19.33		
10	16QAM	50	0	19.33	19.17	19.62	19.28	19.26		
Channel				39675	40148	40620	41093	41565	Tune up Limit (dBm)	MPR (dB)
Frequency (MHz)				2498.5	2545.8	2593	2640.3	2687.5		
5	QPSK	1	0	20.98	21.12	21.58	21.19	21.54	22.0	0
5	QPSK	1	12	20.97	21.27	21.60	21.18	21.57		
5	QPSK	1	24	21.00	21.08	21.52	21.09	21.45		
5	QPSK	12	0	19.92	20.17	20.53	20.19	20.29	21.0	0-1
5	QPSK	12	6	19.97	20.23	20.56	20.24	20.34		
5	QPSK	12	11	19.97	20.15	20.54	20.18	20.34		
5	QPSK	25	0	19.96	20.20	20.55	20.21	20.32		
5	16QAM	1	0	20.17	20.28	20.77	20.41	20.71	21.0	0-1
5	16QAM	1	12	20.17	20.47	20.81	20.42	20.79		
5	16QAM	1	24	20.24	20.28	20.74	20.32	20.69		
5	16QAM	12	0	19.06	19.27	19.63	19.28	19.37	20.0	0-2
5	16QAM	12	6	19.12	19.32	19.66	19.32	19.44		
5	16QAM	12	11	19.12	19.24	19.64	19.28	19.44		
5	16QAM	25	0	19.17	19.30	19.69	19.31	19.47		

Note:
TDD LTE Band41 has 5 required test channels was according to KDB 447498 D01v05r02.

<WLAN Conducted Power>

General Note:

1. For 2.4GHz WLAN MIMO SAR testing, highest average RF output power channel for the lowest data rate for 802.11b were selected for SAR evaluation. 802.11g/n HT20/HT40 were not investigated since the average output powers over all channels and data rates were not more than 0.25 dB higher than the tested channel in the lowest data rate of 802.11b mode.
2. For 5.2 GHz WLAN MIMO SAR testing, highest average RF output power channel for the lowest data rate for 802.11a were selected for SAR evaluation. 802.11n HT20/HT40 modes were not investigated since the average output powers over all channels and data rates were not more than 0.25 dB higher than the tested channel in the lowest data rate of 802.11a mode. IEEE 802.11ac-VHT 80 was evaluated for the highest IEEE 802.11a position in each 5.2GHz band and exposure condition.
3. For 5.8 GHz WLAN MIMO SAR testing, highest average RF output power channel for the lowest data rate for 802.11a were selected for SAR evaluation. 802.11n HT20/HT40 modes were not investigated since the average output powers over all channels and data rates were not more than 0.25 dB higher than the tested channel in the lowest data rate of 802.11a mode. IEEE 802.11ac-VHT 20/VHT80 were evaluated for the highest IEEE 802.11a position in each 5.2GHz band and exposure condition.

<WLAN 2.4GHz>

WLAN 2.4GHz 802.11b Average Power (dBm)								Tune up Limit (dBm)
Power vs. Channel				Power vs. Data Rate				
Channel	Frequency (MHz)	Chain Port	Data Rate 1Mbps	Channel	2Mbps	5.5Mbps	11Mbps	
CH 01	2412	0+1(0)	17.68	CH 11	17.64	17.80	17.86	18.5
CH 06	2437	0+1(0)	17.47					
CH 11	2462	0+1(0)	**17.87**					
CH 01	2412	0+1(1)	16.16	CH 11	16.17	16.22	16.23	16.5
CH 06	2437	0+1(1)	16.07					
CH 11	2462	0+1(1)	**16.25**					
CH 01	2412	0+1	20.00	CH 11	19.98	20.09	20.13	20.5
CH 06	2437	0+1	19.84					
CH 11	2462	0+1	**20.15**					

WLAN 2.4GHz 802.11g Average Power (dBm)												Tune up Limit (dBm)
Power vs. Channel				Power vs. Data Rate								
Channel	Frequency (MHz)	Chain Port	Data Rate 6Mbps	Channel	9Mbps	12Mbps	18Mbps	24Mbps	36Mbps	48Mbps	54Mbps	
CH 01	2412	0+1(0)	**13.97**	CH 01	13.59	13.58	13.74	13.82	13.78	13.75	13.63	14.5
CH 06	2437	0+1(0)	13.52									
CH 11	2462	0+1(0)	13.66									
CH 01	2412	0+1(1)	12.38	CH 01	12.31	12.22	12.39	12.44	12.58	12.56	**12.63**	13.0
CH 06	2437	0+1(1)	12.01									
CH 11	2462	0+1(1)	11.94									
CH 01	2412	0+1	**16.26**	CH 01	16.00	15.96	16.13	16.19	16.23	16.21	16.17	16.5
CH 06	2437	0+1	15.84									
CH 11	2462	0+1	15.89									

WLAN 2.4GHz 802.11n HT20 Average Power (dBm)												Tune up Limit (dBm)
Power vs. Channel				Power vs. MCS Index								
Channel	Frequency (MHz)	Chain Port	MCS Index MCS8	Channel	MCS9	MCS10	MCS11	MCS12	MCS13	MCS14	MCS15	
CH 01	2412	0+1(0)	13.34	CH 11	13.29	13.14	13.34	13.35	13.14	13.18	13.15	14.0
CH 06	2437	0+1(0)	13.30									
CH 11	2462	0+1(0)	**13.41**									
CH 01	2412	0+1(1)	11.71	CH 11	11.48	11.42	11.72	**11.78**	11.56	11.45	11.51	12.0
CH 06	2437	0+1(1)	11.69									
CH 11	2462	0+1(1)	11.75									
CH 01	2412	0+1	15.61	CH 11	15.49	15.37	15.61	15.65	15.43	15.41	15.42	16.0
CH 06	2437	0+1	15.58									
CH 11	2462	0+1	**15.67**									

WLAN 2.4GHz 802.11n HT40 Average Power (dBm)												Tune up Limit (dBm)
Power vs. Channel				Power vs. MCS Index								
Channel	Frequency (MHz)	Chain Port	MCS Index MCS8	Channel	MCS9	MCS10	MCS11	MCS12	MCS13	MCS14	MCS15	
CH 03	2422	0+1(0)	13.13	CH 09	13.59	13.47	13.56	13.34	13.36	13.38	13.44	14.0
CH 06	2437	0+1(0)	13.51									
CH 09	2452	0+1(0)	**13.66**									
CH 03	2422	0+1(1)	11.95	CH 09	11.71	11.58	11.58	11.41	11.45	11.57	11.48	12.5
CH 06	2437	0+1(1)	11.93									
CH 09	2452	0+1(1)	**12.04**									
CH 03	2422	0+1	15.59	CH 09	15.76	15.64	15.69	15.49	15.52	15.58	15.58	16.5
CH 06	2437	0+1	15.80									
CH 09	2452	0+1	**15.94**									

<5GHz WLAN>

WLAN 5GHz 802.11a Average Power (dBm)												Tune up Limit (dBm)
Power vs. Channel				Power vs. Data Rate								
Channel	Frequency (MHz)	Chain Port	Data Rate 6Mbps	Channel	9Mbps	12Mbps	18Mbps	24Mbps	36Mbps	48Mbps	54Mbps	
CH 36	5180	0+1(0)	10.18	CH 44	10.18	10.18	10.42	10.41	10.33	10.32	10.38	11.0
CH 40	5200	0+1(0)	10.23									
CH 44	5220	0+1(0)	**10.43**									
CH 48	5240	0+1(0)	10.32									
CH 149	5745	0+1(0)	10.29	CH 157	10.81	10.83	10.82	10.81	10.71	10.75	10.73	11.5
CH 153	5765	0+1(0)	10.24									
CH 157	5785	0+1(0)	**10.99**									
CH 161	5805	0+1(0)	10.66									
CH 165	5825	0+1(0)	10.69									
CH 36	5180	0+1(1)	8.92	CH 44	8.64	8.69	8.74	8.85	8.85	8.79	8.89	9.5
CH 40	5200	0+1(1)	8.88									
CH 44	5220	0+1(1)	**9.04**									
CH 48	5240	0+1(1)	8.69									
CH 149	5745	0+1(1)	**9.25**	CH 149	9.22	9.07	9.14	9.17	9.14	9.21	9.22	9.5
CH 153	5765	0+1(1)	9.19									
CH 157	5785	0+1(1)	8.98									
CH 161	5805	0+1(1)	8.88									
CH 165	5825	0+1(1)	8.81									
CH 36	5180	0+1	12.61	CH 44	12.49	12.51	12.68	12.71	12.66	12.63	12.71	13.0
CH 40	5200	0+1	12.62									
CH 44	5220	0+1	**12.80**									
CH 48	5240	0+1	12.59									
CH 149	5745	0+1	12.81	CH 157	13.01	13.03	13.01	13.00	13.02	12.98	13.01	13.5
CH 153	5765	0+1	12.76									
CH 157	5785	0+1	**13.11**									
CH 161	5805	0+1	12.87									
CH 165	5825	0+1	12.86									

WLAN 5GHz 802.11n HT20 Average Power (dBm)												Tune up Limit (dBm)
Power vs. Channel				Power vs. MCS Index								
Channel	Frequency (MHz)	Chain Port	MCS Index MCS8	Channel	MCS9	MCS10	MCS11	MCS12	MCS13	MCS14	MCS15	
CH 36	5180	0+1(0)	9.36	CH 48	9.41	9.64	9.87	9.70	9.81	9.87	9.88	10.5
CH 40	5200	0+1(0)	9.31									
CH 44	5220	0+1(0)	9.40									
CH 48	5240	0+1(0)	**9.90**									
CH 149	5745	0+1(0)	9.84	CH 165	10.17	10.22	10.27	10.24	10.23	10.12	10.20	10.5
CH 153	5765	0+1(0)	9.70									
CH 157	5785	0+1(0)	10.16									
CH 161	5805	0+1(0)	10.11									
CH 165	5825	0+1(0)	**10.28**									
CH 36	5180	0+1(1)	8.11	CH 48	8.07	8.29	8.76	8.68	8.67	8.63	8.57	9.0
CH 40	5200	0+1(1)	8.00									
CH 44	5220	0+1(1)	8.12									
CH 48	5240	0+1(1)	**8.89**									
CH 149	5745	0+1(1)	8.67	CH 165	8.56	8.39	8.56	8.57	8.52	8.51	8.55	9.0
CH 153	5765	0+1(1)	8.61									
CH 157	5785	0+1(1)	8.88									
CH 161	5805	0+1(1)	8.82									
CH 165	5825	0+1(1)	**8.92**									
CH 36	5180	0+1	11.79	CH 48	11.80	12.03	12.36	12.23	12.29	12.30	12.28	12.5
CH 40	5200	0+1	11.71									
CH 44	5220	0+1	11.82									
CH 48	5240	0+1	**12.43**									
CH 149	5745	0+1	12.30	CH 165	12.45	12.41	12.51	12.50	12.47	12.40	12.46	13.0
CH 153	5765	0+1	12.20									
CH 157	5785	0+1	12.58									
CH 161	5805	0+1	12.52									
CH 165	5825	0+1	**12.66**									

WLAN 5GHz 802.11n HT40 Average Power (dBm)												Tune up Limit (dBm)
Power vs. Channel				Power vs. MCS Index								
Channel	Frequency (MHz)	Chain Port	MCS Index MCS8	Channel	MCS9	MCS10	MCS11	MCS12	MCS13	MCS14	MCS15	
CH 38	5190	0+1(0)	8.92	CH 46	8.84	8.67	8.66	8.59	8.59	8.56	8.58	9.5
CH 46	5230	0+1(0)	**9.01**									
CH 151	5755	0+1(0)	8.62	CH 159	8.64	8.60	8.48	8.39	8.43	8.41	8.38	9.0
CH 159	5795	0+1(0)	**8.82**									
CH 38	5190	0+1(1)	7.50	CH 46	7.35	7.33	7.28	7.28	7.34	7.31	7.22	8.0
CH 46	5230	0+1(1)	**7.54**									
CH 151	5755	0+1(1)	7.10	CH 159	6.93	6.89	6.82	6.75	6.75	6.81	6.71	7.5
CH 159	5795	0+1(1)	**7.31**									
CH 38	5190	0+1	11.28	CH 46	11.17	11.07	11.04	11.00	11.02	10.99	10.97	11.5
CH 46	5230	0+1	**11.35**									
CH 151	5755	0+1	10.93	CH 159	10.88	10.84	10.74	10.66	10.68	10.70	10.64	11.5
CH 159	5795	0+1	**11.14**									

WLAN 5GHz 802.11ac-VHT20 Average Power (dBm)													Tune up Limit (dBm)
Power vs. Channel				Power vs. MCS Index									
Channel	Frequency (MHz)	Chain Port	MCS Index MCS0	Channel	MCS1	MCS2	MCS3	MCS4	MCS5	MCS6	MCS7	MCS8	
CH 36	5180	0+1(0)	**10.39**	CH 36	10.20	10.31	10.35	10.38	10.29	10.21	9.79	9.70	10.5
CH 40	5200	0+1(0)	10.36										
CH 44	5220	0+1(0)	10.18										
CH 48	5240	0+1(0)	10.12										
CH 149	5745	0+1(0)	**12.06**	CH 149	11.45	11.85	11.82	11.87	11.54	11.63	11.58	11.78	12.5
CH 153	5765	0+1(0)	12.01										
CH 157	5785	0+1(0)	10.84										
CH 161	5805	0+1(0)	10.75										
CH 165	5825	0+1(0)	10.86										
CH 36	5180	0+1(1)	**9.31**	CH 36	9.14	9.09	9.06	9.14	9.05	9.02	7.84	8.74	9.5
CH 40	5200	0+1(1)	9.15										
CH 44	5220	0+1(1)	8.75										
CH 48	5240	0+1(1)	8.72										
CH 149	5745	0+1(1)	**10.13**	CH 149	9.73	10.02	10.01	10.04	10.09	10.08	9.48	10.11	10.5
CH 153	5765	0+1(1)	9.96										10.5
CH 157	5785	0+1(1)	9.15										9.5
CH 161	5805	0+1(1)	8.85										9.0
CH 165	5825	0+1(1)	8.98										9.5
CH 36	5180	0+1	**12.89**	CH 36	12.71	12.76	12.76	12.81	12.73	12.67	11.93	12.26	13.0
CH 40	5200	0+1	12.81										
CH 44	5220	0+1	12.53										
CH 48	5240	0+1	12.49										
CH 149	5745	0+1	**14.21**	CH 149	13.68	14.05	14.02	14.06	13.89	13.94	13.67	14.03	14.5
CH 153	5765	0+1	14.11										14.5
CH 157	5785	0+1	13.09										14.5
CH 161	5805	0+1	12.91										13.0
CH 165	5825	0+1	13.03										14.5

WLAN 5GHz 802.11ac-VHT40 Average Power (dBm)														Tune up Limit (dBm)
Power vs. Channel				Power vs. MCS Index										
Channel	Frequency (MHz)	Chain Port	MCS Index MCS0	Channel	MCS1	MCS2	MCS3	MCS4	MCS5	MCS6	MCS7	MCS8	MCS9	
CH 38	5190	0+1(0)	7.44	CH 46	7.68	7.69	7.70	7.83	7.77	7.81	7.71	7.81	7.69	8.0
CH 46	5230	0+1(0)	**7.84**											
CH 151	5755	0+1(0)	7.48	CH 159	7.57	7.47	7.48	7.47	7.39	7.55	7.42	7.38	7.53	8.0
CH 159	5795	0+1(0)	**7.58**											
CH 38	5190	0+1(1)	6.87	CH 46	7.08	7.00	6.72	6.76	6.28	6.47	6.43	6.49	6.34	7.5
CH 46	5230	0+1(1)	**7.24**											
CH 151	5755	0+1(1)	6.45	CH 159	6.19	6.36	6.33	6.56	6.50	6.31	6.38	6.33	6.20	7.0
CH 159	5795	0+1(1)	**6.67**											
CH 38	5190	0+1	10.17	CH 46	10.40	10.37	10.25	10.34	10.10	10.20	10.13	10.21	10.08	11.0
CH 46	5230	0+1	**10.56**											
CH 151	5755	0+1	10.01	CH 159	9.95	9.96	9.96	10.05	9.98	9.99	9.94	9.90	9.92	10.5
CH 159	5795	0+1	**10.16**											

WLAN 5GHz 802.11ac-VHT80 Average Power (dBm)														Tune up Limit (dBm)
Power vs. Channel				Power vs. MCS Index										
Channel	Frequency (MHz)	Chain Port	MCS Index MCS0	Channel	MCS1	MCS2	MCS3	MCS4	MCS5	MCS6	MCS7	MCS8	MCS9	
CH 42	5210	0+1(0)	**6.66**	CH 42	6.09	6.02	5.74	5.85	5.75	5.57	5.26	5.18	5.58	7.0
CH 155	5775	0+1(0)	**6.87**	CH 155	6.29	6.44	6.01	6.08	6.31	5.91	6.04	5.90	6.19	7.0
CH 42	5210	0+1(1)	**4.66**	CH 42	4.24	4.54	4.27	4.35	4.41	4.04	4.02	4.20	4.18	5.0
CH 155	5775	0+1(1)	**4.85**	CH 155	4.79	4.68	4.49	4.61	4.72	4.54	4.49	4.72	4.74	5.0
CH 42	5210	0+1	**8.78**	CH 42	8.27	8.35	8.08	8.18	8.14	7.88	7.70	7.73	7.95	9.5
CH 155	5775	0+1	**8.99**	CH 155	8.62	8.66	8.33	8.42	8.60	8.29	8.35	8.36	8.54	9.5

13. Antenna Location

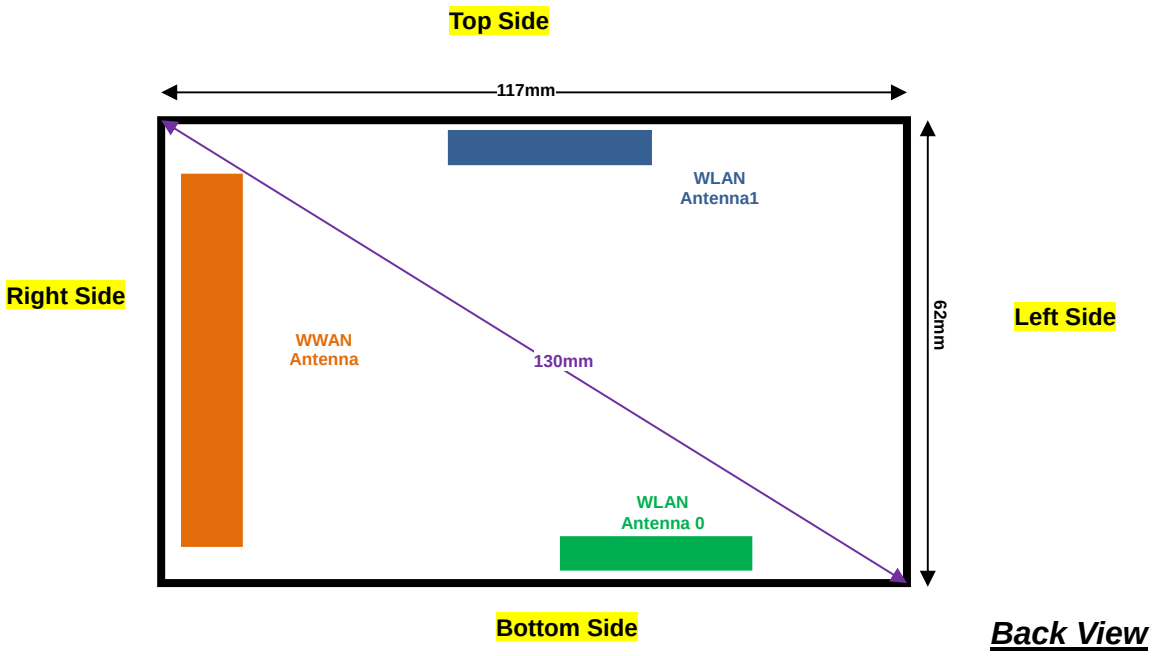

Distance of the Antenna to the EUT surface/edge						
Antennas	Back	Front	Top Side	Bottom Side	Right Side	Left Side
WWAN	≤ 25mm	≤ 25mm	≤ 25mm	≤ 25mm	≤ 25mm	101mm
WLAN(0+1)	≤ 25mm	≤ 25mm	≤ 25mm	≤ 25mm	48mm	34mm

Positions for SAR tests; Hotspot mode						
Antennas	Back	Front	Top Side	Bottom Side	Right Side	Left Side
WWAN	Yes	Yes	Yes	Yes	Yes	No
WLAN(0+1)	Yes	Yes	Yes	Yes	No	No

General Note:

1. This product has three transmitter antenna paths, WWAN Antenna for CDMA2000 BC1and LTE Band 25/26/41, Antenna 0 and Antenna 1 for WLAN. Each antenna path can transmit simultaneously.
2. Referring to KDB 941225 D06 v01r01, when the overall device length and width are ≥ 9cm*5cm, the test distance is 10 mm. SAR must be measured for all sides and surfaces with a transmitting antenna located within 25mm from that surface or edge.

14. SAR Test Results

General Note:

1. Per KDB 447498 D01v05r02, the reported SAR is the measured SAR value adjusted for maximum tune-up tolerance.
   a. Tune-up scaling Factor = tune-up limit power (mW) / EUT RF power (mW), where tune-up limit is the maximum rated power among all production units.
   b. For SAR testing of WLAN signal with non-100% duty cycle, the measured SAR is scaled-up by the duty cycle scaling factor which is equal to "1/(duty cycle)"
   c. For WWAN: Reported SAR(W/kg)= Measured SAR(W/kg)*Tune-up Scaling Factor
   d. For WLAN: Reported SAR(W/kg)= Measured SAR(W/kg)* Duty Cycle scaling factor * Tune-up scaling factor
2. Per KDB 447498 D01v05r02, for each exposure position, testing of other required channels within the operating mode of a frequency band is not required when the *reported* 1-g or 10-g SAR for the mid-band or highest output power channel is:
   - ≤ 0.8 W/kg or 2.0 W/kg, for 1-g or 10-g respectively, when the transmission band is ≤ 100 MHz
   - ≤ 0.6 W/kg or 1.5 W/kg, for 1-g or 10-g respectively, when the transmission band is between 100 MHz and 200 MHz
   - ≤ 0.4 W/kg or 1.0 W/kg, for 1-g or 10-g respectively, when the transmission band is ≥ 200 MHz
3. Per KDB 941225 D01v02, Head SAR for RC3+SO55 is not required because the maximum average output power of RC1 is less than 1/4 dB higher than RC3+SO55 and considering the possibility of e.g. 3rd party VoIP was additional Ev-Do Rev A (RETAP 4096 bits) SAR testing performed on RC3+SO55 worse case.
4. Per KDB 941225 D01v02, in Hotspot mode EUT is treated as data device and SAR is tested with Ev-Do Rev 0 (RTAP 153.6kbps). If 1xRTT and Ev-Do Rev A (RETAP 4096 bits) power is high than 1/4dB higher than Re v0, SAR tests with those settings are necessary.
5. Per KDB 941225 D01v02, SAR for body-worn exposure configurations is measured in RC3 with the DUT configured to transmit at full rate on FCH with all other code channels disabled using TDSO / SO32. SAR for multiple code channels (FCH + SCH) is not required when the maximum average output of each RF channel is less than ¼ dB higher than that measured with FCH only. To account for VOIP operation, Ev-Do Rev. A (RETAP 4096 bits) SAR testing was performed at the worst position identified by 1xRTT SAR test results, for both head and body-worn accessory exposure conditions.
6. Per KDB 941225 D05v02r03, start with the largest channel bandwidth and measure SAR for QPSK with 1 RB allocation, using the RB offset and required test channel combination with the highest maximum output power for RB offsets at the upper edge, middle and lower edge of each required test channel.
7. Per KDB 941225 D05v02r03, 50% RB allocation for QPSK SAR testing follows 1RB QPSK allocation procedure.
8. Per KDB 941225 D05v02r03, For QPSK with 100% RB allocation, SAR is not required when the highest maximum output power for 100 % RB allocation is less than the highest maximum output power in 50% and 1 RB allocations and the highest reported SAR for 1 RB and 50% RB allocation are ≤ 0.8 W/kg. Otherwise, SAR is measured for the highest output power channel; and if the reported SAR is > 1.45 W/kg, the remaining required test channels must also be tested.
9. Per KDB 941225 D05v02r03, 16QAM output power for each RB allocation configuration is > not ½ dB higher than the same configuration in QPSK and the reported SAR for the QPSK configuration is ≤ 1.45 W/kg; Per KDB 941225 D05v02r03, 16QAM SAR testing is not required.
10. Per KDB 941225 D05v02r03, Smaller bandwidth output power for each RB allocation configuration is > not ½ dB higher than the same configuration in the largest supported bandwidth, and the reported SAR for the largest supported bandwidth is ≤ 1.45 W/kg; Per KDB 941225 D05v02r03, smaller bandwidth SAR testing is not required.
11. This device 2.4GHz WLAN supports Hotspot operation, 5.8GHz WLAN supports WiFi Direct (Group Client / Group Owner), and 5.2GHz supports WiFi Direct (Group Client only).

14.1 Body SAR

<CDMA SAR>

Plot No.	Band	Mode	Test Position	Gap (cm)	Ch.	Freq. (MHz)	Average Power (dBm)	Tune-Up Limit (dBm)	Tune-up Scaling Factor	Power Drift (dB)	Measured 1g SAR (W/kg)	Reported 1g SAR (W/kg)
	CDMA2000 BC1	RTAP 153.6	Front	1	1175	1908.75	24.10	24.50	1.096	-0.07	1.080	1.184
#01	CDMA2000 BC1	RTAP 153.6	Back	1	1175	1908.75	24.10	24.50	1.096	-0.05	1.120	**1.228**
	CDMA2000 BC1	RTAP 153.6	Right side	1	1175	1908.75	24.10	24.50	1.096	-0.08	0.994	1.090
	CDMA2000 BC1	RTAP 153.6	Top side	1	1175	1908.75	24.10	24.50	1.096	-0.02	0.241	0.264
	CDMA2000 BC1	RTAP 153.6	Bottom side	1	1175	1908.75	24.10	24.50	1.096	-0.01	0.303	0.332
	CDMA2000 BC1	RTAP 153.6	Front	1	1175	1851.25	23.71	24.50	1.199	-0.09	0.878	1.053
	CDMA2000 BC1	RTAP 153.6	Front	1	25	1880	23.79	24.50	1.178	-0.01	0.833	0.981
	CDMA2000 BC1	RTAP 153.6	Back	1	600	1851.25	23.71	24.50	1.199	-0.1	0.878	1.053
	CDMA2000 BC1	RTAP 153.6	Back	1	25	1880	23.79	24.50	1.178	-0.19	0.854	1.006
	CDMA2000 BC1	RTAP 153.6	Right side	1	600	1851.25	23.71	24.50	1.199	-0.06	0.801	0.961
	CDMA2000 BC1	RTAP 153.6	Right side	1	25	1880	23.79	24.50	1.178	-0.07	0.772	0.909

<LTE SAR>

Plot No.	Band	BW (MHz)	RB Size	RB offest	Modulation	Test Position	Gap (cm)	Ch.	Freq. (MHz)	Average Power (dBm)	Tune-Up Limit (dBm)	Tune-up Scaling Factor	Power Drift (dB)	Measured 1g SAR (W/kg)	Reported 1g SAR (W/kg)
	LTE Band 26	15	1	0	QPSK	Front	1	26765	821.5	22.44	23.00	1.138	-0.03	0.733	0.834
	LTE Band 26	15	1	0	QPSK	Front	1	26865	831.5	22.09	23.00	1.233	-0.05	0.674	0.831
	LTE Band 26	15	1	0	QPSK	Front	1	26965	841.5	22.11	23.00	1.227	-0.07	0.444	0.545
	LTE Band 26	15	36	0	QPSK	Front	1	26865	831.5	21.10	22.00	1.230	-0.04	0.521	0.641
	LTE Band 26	15	75	0	QPSK	Front	1	26865	831.5	20.75	22.00	1.334	-0.04	0.474	0.632
#02	LTE Band 26	15	1	0	QPSK	Back	1	26765	821.5	22.44	23.00	1.138	-0.02	0.750	**0.853**
	LTE Band 26	15	1	0	QPSK	Back	1	26865	831.5	22.09	23.00	1.233	-0.05	0.650	0.802
	LTE Band 26	15	1	0	QPSK	Back	1	26965	841.5	22.11	23.00	1.227	-0.03	0.580	0.712
	LTE Band 26	15	36	0	QPSK	Back	1	26865	831.5	21.10	22.00	1.230	-0.09	0.511	0.629
	LTE Band 26	15	75	0	QPSK	Back	1	26865	831.5	20.75	22.00	1.334	-0.02	0.455	0.607
	LTE Band 26	15	1	0	QPSK	Right side	1	26765	821.5	22.44	23.00	1.138	-0.09	0.041	0.047
	LTE Band 26	15	36	0	QPSK	Right side	1	26865	831.5	21.10	22.00	1.230	-0.03	0.056	0.069
	LTE Band 26	15	1	0	QPSK	Top side	1	26765	821.5	22.44	23.00	1.138	-0.03	0.598	0.680
	LTE Band 26	15	36	0	QPSK	Top side	1	26865	831.5	21.10	22.00	1.230	-0.01	0.384	0.472
	LTE Band 26	15	1	0	QPSK	Bottom side	1	26765	821.5	22.44	23.00	1.138	-0.04	0.377	0.429
	LTE Band 26	15	36	0	QPSK	Bottom side	1	26865	831.5	21.10	22.00	1.230	-0.05	0.256	0.315
#03	LTE Band 25	20	1	0	QPSK	Front	1	26140	1860	21.93	23.00	1.279	-0.05	0.569	**0.728**
	LTE Band 25	20	50	24	QPSK	Front	1	26590	1905	20.87	22.00	1.297	-0.05	0.429	0.556
	LTE Band 25	20	1	0	QPSK	Back	1	26140	1860	21.93	23.00	1.279	-0.13	0.529	0.677
	LTE Band 25	20	50	24	QPSK	Back	1	26590	1905	20.87	22.00	1.297	-0.01	0.425	0.551
	LTE Band 25	20	1	0	QPSK	Right side	1	26140	1860	21.93	23.00	1.279	-0.05	0.559	0.715
	LTE Band 25	20	50	24	QPSK	Right side	1	26590	1905	20.87	22.00	1.297	-0.06	0.445	0.577
	LTE Band 25	20	1	0	QPSK	Top side	1	26140	1860	21.93	23.00	1.279	-0.05	0.079	0.101
	LTE Band 25	20	50	24	QPSK	Top side	1	26590	1905	20.87	22.00	1.297	-0.03	0.064	0.083
	LTE Band 25	20	1	0	QPSK	Bottom side	1	26140	1860	21.93	23.00	1.279	-0.03	0.143	0.183
	LTE Band 25	20	50	24	QPSK	Bottom side	1	26590	1905	20.87	22.00	1.297	-0.08	0.108	0.140

Plot No.	Band	BW (MHz)	RB Size	RB offest	Modulation	Test Position	Gap (cm)	Ch.	Freq. (MHz)	Average Power (dBm)	Tune-Up Limit (dBm)	Tune-up Scaling Factor	Duty Cycle %	Duty Cycle Scaling Factor	Power Drift (dB)	Measured 1g SAR (W/kg)	Reported 1g SAR (W/kg)
	TDD-LTE Band41	20	1	0	QPSK	Front	1	40620	2593	21.67	22.00	1.079	62.9	1.006	-0.1	0.667	0.724
	TDD-LTE Band41	20	1	0	QPSK	Front	1	39750	2506	21.48	22.00	1.127	62.9	1.006	0.11	0.632	0.717
	TDD-LTE Band41	20	1	0	QPSK	Front	1	40185	2549.5	21.35	22.00	1.161	62.9	1.006	0.05	0.672	0.785
	TDD-LTE Band41	20	1	0	QPSK	Front	1	41055	2636.5	21.30	22.00	1.175	62.9	1.006	0.15	0.706	0.834
	TDD-LTE Band41	20	1	0	QPSK	Front	1	41490	2680	21.45	22.00	1.135	62.9	1.006	0.16	0.526	0.601
	TDD-LTE Band41	20	50	0	QPSK	Front	1	40620	2593	20.57	21.00	1.104	62.9	1.006	0.02	0.513	0.570
	TDD-LTE Band41	20	100	0	QPSK	Front	1	40620	2593	20.54	21.00	1.112	62.9	1.006	0.05	0.522	0.584
	TDD-LTE Band41	20	1	0	QPSK	Back	1	40620	2593	21.67	22.00	1.079	62.9	1.006	-0.02	0.871	0.945
	TDD-LTE Band41	20	1	0	QPSK	Back	1	39750	2506	21.48	22.00	1.127	62.9	1.006	-0.14	0.865	0.981
	TDD-LTE Band41	20	1	0	QPSK	Back	1	40185	2549.5	21.35	22.00	1.161	62.9	1.006	-0.11	0.991	1.158
	TDD-LTE Band41	20	1	0	QPSK	Back	1	41055	2636.5	21.30	22.00	1.175	62.9	1.006	-0.0057	1.020	1.206
	TDD-LTE Band41	20	1	0	QPSK	Back	1	41490	2680	21.45	22.00	1.135	62.9	1.006	-0.15	0.783	0.894
	TDD-LTE Band41	20	50	0	QPSK	Back	1	40620	2593	20.57	21.00	1.104	62.9	1.006	-0.19	0.771	0.856
	TDD-LTE Band41	20	50	0	QPSK	Back	1	39750	2506	20.40	21.00	1.148	62.9	1.006	-0.03	0.703	0.812
	TDD-LTE Band41	20	50	0	QPSK	Back	1	40185	2549.5	20.26	21.00	1.186	62.9	1.006	-0.15	0.764	0.911
	TDD-LTE Band41	20	50	0	QPSK	Back	1	41055	2636.5	20.07	21.00	1.239	62.9	1.006	0.11	0.823	1.026
	TDD-LTE Band41	20	50	0	QPSK	Back	1	41490	2680	20.21	21.00	1.199	62.9	1.006	-0.13	0.854	1.031
	TDD-LTE Band41	20	100	0	QPSK	Back	1	40620	2593	20.54	21.00	1.112	62.9	1.006	-0.06	0.755	0.844
	TDD-LTE Band41	20	1	0	QPSK	Right Side	1	40620	2593	21.67	22.00	1.079	62.9	1.006	0.12	1.050	1.14
	TDD-LTE Band41	20	1	0	QPSK	Right Side	1	39750	2506	21.48	22.00	1.127	62.9	1.006	0.11	0.876	0.993
	TDD-LTE Band41	20	1	0	QPSK	Right Side	1	40185	2549.5	21.35	22.00	1.161	62.9	1.006	0.18	0.961	1.123
#04	TDD-LTE Band41	20	1	0	QPSK	Right Side	1	41055	2636.5	21.30	22.00	1.175	62.9	1.006	0.12	1.150	**1.359**
	TDD-LTE Band41	20	1	0	QPSK	Right Side	1	41490	2680	21.45	21.00	0.902	62.9	1.006	0.14	1.010	0.916
	TDD-LTE Band41	20	50	0	QPSK	Right Side	1	40620	2593	20.57	21.00	1.104	62.9	1.006	0.19	0.837	0.930
	TDD-LTE Band41	20	50	0	QPSK	Right Side	1	39750	2506	20.40	21.00	1.148	62.9	1.006	0.14	0.675	0.780
	TDD-LTE Band41	20	50	0	QPSK	Right Side	1	40185	2549.5	20.26	21.00	1.186	62.9	1.006	0.16	0.750	0.895
	TDD-LTE Band41	20	50	0	QPSK	Right Side	1	41055	2636.5	20.07	21.00	1.239	62.9	1.006	0.15	0.921	1.148
	TDD-LTE Band41	20	50	0	QPSK	Right Side	1	41490	2680	20.21	21.00	1.199	62.9	1.006	0.17	0.744	0.898
	TDD-LTE Band41	20	100	0	QPSK	Right Side	1	40620	2593	20.54	21.00	1.112	62.9	1.006	0.17	0.817	0.914
	TDD-LTE Band41	20	1	0	QPSK	Top Side	1	40620	2593	21.67	22.00	1.079	62.9	1.006	0.11	0.121	0.131
	TDD-LTE Band41	20	50	0	QPSK	Top Side	1	40620	2593	20.57	21.00	1.104	62.9	1.006	-0.04	0.095	0.106
	TDD-LTE Band41	20	1	0	QPSK	Bottom Side	1	40620	2593	21.67	22.00	1.079	62.9	1.006	0.18	0.151	0.164
	TDD-LTE Band41	20	50	0	QPSK	Bottom Side	1	40620	2593	20.57	21.00	1.104	62.9	1.006	0.03	0.119	0.132

<DTS WLAN SAR>

Plot No.	Band	Mode	Test Position	Gap (cm)	Ant.	Ch.	Freq. (MHz)	Average Power (dBm)	Tune-Up Limit (dBm)	Tune-up Scaling Factor	Duty Cycle %	Duty Cycle Scaling Factor	Power Drift (dB)	Measured 1g SAR (W/kg)	Reported 1g SAR (W/kg)
	WLAN 2.4GHz	802.11b 1Mbps	Front	1	Ant.0+1	11	2462	20.15	20.50	1.084	100	1.000	-0.06	0.212	0.230
	WLAN 2.4GHz	802.11b 1Mbps	Back	1	Ant.0+1	11	2462	20.15	20.50	1.084	100	1.000	-0.09	0.284	0.308
	WLAN 2.4GHz	802.11b 1Mbps	Top Side	1	Ant.0+1	11	2462	20.15	20.50	1.084	100	1.000	-0.07	0.236	0.256
#05	WLAN 2.4GHz	802.11b 1Mbps	Bottom Side	1	Ant.0+1	11	2462	20.15	20.50	1.084	100	1.000	-0.08	0.324	**0.351**

<UNII WLAN SAR>

Plot No.	Band	Mode	Test Position	Gap (cm)	Ant.	Ch.	Freq. (MHz)	Average Power (dBm)	Tune-Up Limit (dBm)	Tune-up Scaling Factor	Duty Cycle %	Duty Cycle Scaling Factor	Power Drift (dB)	Measured 1g SAR (W/kg)	Reported 1g SAR (W/kg)
	WLAN 5.2GHz	802.11a 6Mbps	Front	1	Ant 0+1	44	5220	12.80	13.00	1.047	95.57	1.046	0.17	0.050	0.055
	WLAN 5.2GHz	802.11a 6Mbps	Back	1	Ant 0+1	44	5220	12.80	13.00	1.047	95.57	1.046	0.07	0.174	0.191
#06	WLAN 5.2GHz	802.11a 6Mbps	Top Side	1	Ant 0+1	44	5220	12.80	13.00	1.047	95.57	1.046	0.07	0.578	**0.633**
	WLAN 5.2GHz	802.11a 6Mbps	Bottom Side	1	Ant 0+1	44	5220	12.80	13.00	1.047	95.57	1.046	0.16	0.222	0.243
	WLAN 5.2GHz	802.11ac-VHT80 MCS0	Top Side	1	Ant 0+1	42	5210	8.78	9.50	1.180	85.14	1.175	-0.02	0.129	0.179
	WLAN 5.8GHz	802.11a 6Mbps	Front	1	Ant 0+1	157	5785	13.11	13.50	1.094	95.57	1.046	0.1	0.084	0.096
	WLAN 5.8GHz	802.11a 6Mbps	Back	1	Ant 0+1	157	5785	13.11	13.50	1.094	95.57	1.046	0.14	0.108	0.124
	WLAN 5.8GHz	802.11a 6Mbps	Top Side	1	Ant 0+1	157	5785	13.11	13.50	1.094	95.57	1.046	-0.13	0.384	0.439
	WLAN 5.8GHz	802.11a 6Mbps	Bottom Side	1	Ant 0+1	157	5785	13.11	13.50	1.094	95.57	1.046	-0.11	0.581	0.665
	WLAN 5.8GHz	802.11ac-VHT20 MCS0	Bottom Side	1	Ant 0+1	149	5745	14.21	14.50	1.069	96.13	1.040	-0.05	0.693	0.770
	WLAN 5.8GHz	802.11ac-VHT80 MCS0	Bottom Side	1	Ant 0+1	155	5755	8.99	9.50	1.125	85.14	1.175	-0.12	0.125	0.165
	WLAN 5.8GHz	802.11a 6Mbps	Bottom Side	1	Ant 0+1	149	5745	12.81	13.50	1.172	95.57	1.046	-0.13	0.557	0.683
	WLAN 5.8GHz	802.11a 6Mbps	Bottom Side	1	Ant 0+1	165	5825	12.86	13.50	1.159	95.57	1.046	-0.12	0.610	0.739
	WLAN 5.8GHz	802.11ac-VHT20 MCS0	Bottom Side	1	Ant 0+1	157	5785	13.09	14.50	1.384	96.13	1.040	-0.11	0.698	1.004
#07	WLAN 5.8GHz	802.11ac-VHT20 MCS0	Bottom Side	1	Ant 0+1	165	5825	13.03	14.50	1.403	96.13	1.040	-0.02	0.714	**1.042**

14.2 Repeated SAR Measurement

No.	Band	BW (MHz)	RB Size	RB offest	Mode	Test Position	Gap (cm)	Ch.	Freq. (MHz)	Average Power (dBm)	Tune-Up Limit (dBm)	Tune-up Scaling Factor	Power Drift (dB)	Measured 1g SAR (W/kg)	Ratio	Reported 1g SAR (W/kg)
1st	CDMA2000 BC1	-	-	-	RTAP 153.6	Back	1	1175	1908.75	24.10	24.50	1.096	-0.05	1.12	1	1.228
2nd	CDMA2000 BC1	-	-	-	RTAP 153.6	Back	1	1175	1908.75	24.10	24.50	1.096	-0.07	1.11	1.009	1.217
1st	TDD-LTE Band41	20M	1	0	QPSK	Right Side	1	41055	2636.5	21.30	22.00	1.175	0.12	1.15	1	1.359
2nd	TDD-LTE Band41	20M	1	0	QPSK	Right Side	1	41055	2636.5	21.30	22.00	1.175	0.01	1.14	1.009	1.347

General Note:

1. Per KDB 865664 D01v01r03, for each frequency band, repeated SAR measurement is required only when the measured SAR is ≥0.8W/kg
2. Per KDB 865664 D01v01r03, if the ratio among the repeated measurement is ≤ 1.2 and the measured SAR <1.45W/kg, only one repeated measurement is required.
3. The ratio is the difference in percentage between original and repeated *measured SAR*.
4. All measurement SAR result is scaled-up to account for tune-up tolerance and is compliant.

15. Simultaneous Transmission Analysis

NO.	Simultaneous Transmission Configurations	CDMA/LTE Ufi	Note
		Body	
1.	CDMA(Data) + WLAN2.4GHz MIMO (data)	Yes	2.4GHz Hotspot
2.	LTE(Data) + WLAN2.4GHz MIMO (data)	Yes	2.4GHz Hotspot
3.	CDMA((Data) + WLAN5GHz MIMO (data)	Yes	WiFi Direct
4.	LTE(Data) + WLAN5GHz MIMO (data)	Yes	WiFi Direct

General Note:

1. This device has MIMO 2X2 for WLAN 2.4GHz/5GHz, for software configuration control to operate only MIMO. SISO state disabled.
2. This device 2.4GHz WLAN supports hotspot operation, 5.8GHz WLAN supports hotspot /WiFi Direct (GC/GO) and 5.2GHz supports WiFi Direct (GC only).
3. EUT will choose either WLAN 2.4GHz or WLAN 5GHz according to the network signal condition; therefore, they will not transmit simultaneously.
4. EUT will choose either CDMA or LTE according to the network signal condition; therefore, they will not transmit simultaneously.
5. The worst case 5 GHz WLAN reported SAR for each configuration was used for SAR summation, regardless of whether the WLAN channel has WiFi Direct(GC/GO). Therefore, the following summations represent the absolute worst cases for simultaneous transmission with 5 GHz WLAN.

15.1 Body Exposure Conditions

<WWAN PCB + WLAN DTS>

WWAN Band		Exposure Position	WWAN PCB Max. WWAN SAR (W/kg)	WLAN DTS Max. WLAN SAR (W/kg)	Summed SAR (W/kg)	SPLSR	Case No
CDMA2000	BC1	Front	1.184	0.230	1.41		
		Back	1.228	0.308	**1.54**		
		Right side	1.090		1.09		
		Top side	0.264	0.256	0.52		
		Bottom side	0.332	0.351	0.68		
LTE	Band 26	Front	0.834	0.230	1.06		
		Back	0.853	0.308	1.16		
		Right side	0.069		0.07		
		Top side	0.680	0.256	0.94		
		Bottom side	0.429	0.351	0.78		
	Band 25	Front	0.728	0.230	0.96		
		Back	0.677	0.308	0.99		
		Right side	0.715		0.72		
		Top side	0.101	0.256	0.36		
		Bottom side	0.183	0.351	0.53		
	TDD Band 41	Front	0.834	0.230	1.06		
		Back	1.206	0.308	1.51		
		Right side	1.359		1.36		
		Top side	0.131	0.256	0.39		
		Bottom side	0.164	0.351	0.52		

<WWAN PCB + WLAN NII>

WWAN Band		Exposure Position	WWAN PCB Max. WWAN SAR (W/kg)	WLAN NII Max. WLAN SAR (W/kg)	Summed SAR (W/kg)	SPLSR	Case No
CDMA2000	BC1	Front	1.184	0.096	1.28		
		Back	1.228	0.191	1.42		
		Right side	1.090		1.09		
		Top side	0.264	0.633	0.90		
		Bottom side	0.332	1.042	1.37		
LTE	Band 26	Front	0.834	0.096	0.93		
		Back	0.853	0.191	1.04		
		Right side	0.069		0.07		
		Top side	0.680	0.633	1.31		
		Bottom side	0.429	1.042	**1.47**		
	Band 25	Front	0.728	0.096	0.82		
		Back	0.677	0.191	0.87		
		Right side	0.715		0.72		
		Top side	0.101	0.633	0.73		
		Bottom side	0.183	1.042	1.23		
	TDD Band 41	Front	0.834	0.096	0.93		
		Back	1.206	0.191	1.40		
		Right side	1.359		1.36		
		Top side	0.131	0.633	0.76		
		Bottom side	0.164	1.042	1.21		

Test Engineer： Kat Yin

16. Uncertainty Assessment

The component of uncertainly may generally be categorized according to the methods used to evaluate them. The evaluation of uncertainly by the statistical analysis of a series of observations is termed a Type An evaluation of uncertainty. The evaluation of uncertainty by means other than the statistical analysis of a series of observation is termed a Type B evaluation of uncertainty. Each component of uncertainty, however evaluated, is represented by an estimated standard deviation, termed standard uncertainty, which is determined by the positive square root of the estimated variance.

A Type A evaluation of standard uncertainty may be based on any valid statistical method for treating data. This includes calculating the standard deviation of the mean of a series of independent observations; using the method of least squares to fit a curve to the data in order to estimate the parameter of the curve and their standard deviations; or carrying out an analysis of variance in order to identify and quantify random effects in certain kinds of measurement.

A type B evaluation of standard uncertainty is typically based on scientific judgment using all of the relevant information available. These may include previous measurement data, experience, and knowledge of the behavior and properties of relevant materials and instruments, manufacture's specification, data provided in calibration reports and uncertainties assigned to reference data taken from handbooks. Broadly speaking, the uncertainty is either obtained from an outdoor source or obtained from an assumed distribution, such as the normal distribution, rectangular or triangular distributions indicated in table below.

Uncertainty Distributions	Normal	Rectangular	Triangular	U-Shape
Multi-plying Factor[(a)]	1/k[(b)]	1/√3	1/√6	1/√2

(a) standard uncertainty is determined as the product of the multiplying factor and the estimated range of variations in the measured quantity

(b) κ is the coverage factor

Table 17.1. Standard Uncertainty for Assumed Distribution

The combined standard uncertainty of the measurement result represents the estimated standard deviation of the result. It is obtained by combining the individual standard uncertainties of both Type A and Type B evaluation using the usual "root-sum-squares" (RSS) methods of combining standard deviations by taking the positive square root of the estimated variances.

Expanded uncertainty is a measure of uncertainty that defines an interval about the measurement result within which the measured value is confidently believed to lie. It is obtained by multiplying the combined standard uncertainty by a coverage factor. Typically, the coverage factor ranges from 2 to 3. Using a coverage factor allows the true value of a measured quantity to be specified with a defined probability within the specified uncertainty range. For purpose of this document, a coverage factor two is used, which corresponds to confidence interval of about 95 %. The DASY uncertainty Budget is shown in the following tables.

Error Description	Uncertainty Value (±%)	Probability Distribution	Divisor	Ci (1g)	Ci (10g)	Standard Uncertainty (1g)	Standard Uncertainty (10g)
Measurement System							
Probe Calibration	6.0	Normal	1	1	1	± 6.0 %	± 6.0 %
Axial Isotropy	4.7	Rectangular	√3	0.7	0.7	± 1.9 %	± 1.9 %
Hemispherical Isotropy	9.6	Rectangular	√3	0.7	0.7	± 3.9 %	± 3.9 %
Boundary Effects	1.0	Rectangular	√3	1	1	± 0.6 %	± 0.6 %
Linearity	4.7	Rectangular	√3	1	1	± 2.7 %	± 2.7 %
System Detection Limits	1.0	Rectangular	√3	1	1	± 0.6 %	± 0.6 %
Readout Electronics	0.3	Normal	1	1	1	± 0.3 %	± 0.3 %
Response Time	0.8	Rectangular	√3	1	1	± 0.5 %	± 0.5 %
Integration Time	2.6	Rectangular	√3	1	1	± 1.5 %	± 1.5 %
RF Ambient Noise	3.0	Rectangular	√3	1	1	± 1.7 %	± 1.7 %
RF Ambient Reflections	3.0	Rectangular	√3	1	1	± 1.7 %	± 1.7 %
Probe Positioner	0.4	Rectangular	√3	1	1	± 0.2 %	± 0.2 %
Probe Positioning	2.9	Rectangular	√3	1	1	± 1.7 %	± 1.7 %
Max. SAR Eval.	1.0	Rectangular	√3	1	1	± 0.6 %	± 0.6 %
Test Sample Related							
Device Positioning	2.9	Normal	1	1	1	± 2.9 %	± 2.9 %
Device Holder	3.6	Normal	1	1	1	± 3.6 %	± 3.6 %
Power Drift	5.0	Rectangular	√3	1	1	± 2.9 %	± 2.9 %
Phantom and Setup							
Phantom Uncertainty	4.0	Rectangular	√3	1	1	± 2.3 %	± 2.3 %
Liquid Conductivity (Target)	5.0	Rectangular	√3	0.64	0.43	± 1.8 %	± 1.2 %
Liquid Conductivity (Meas.)	2.5	Normal	1	0.64	0.43	± 1.6 %	± 1.1 %
Liquid Permittivity (Target)	5.0	Rectangular	√3	0.6	0.49	± 1.7 %	± 1.4 %
Liquid Permittivity (Meas.)	2.5	Normal	1	0.6	0.49	± 1.5 %	± 1.2 %
Combined Standard Uncertainty						± 11.0 %	± 10.8 %
Coverage Factor for 95 %						K=2	
Expanded Uncertainty						**± 22.0 %**	**± 21.5 %**

Table 17.2. Uncertainty Budget for frequency range 300 MHz to 3 GHz

Error Description	Uncertainty Value (±%)	Probability Distribution	Divisor	Ci (1g)	Ci (10g)	Standard Uncertainty (1g)	Standard Uncertainty (10g)
Measurement System							
Probe Calibration	6.55	Normal	1	1	1	± 6.55 %	± 6.55 %
Axial Isotropy	4.7	Rectangular	√3	0.7	0.7	± 1.9 %	± 1.9 %
Hemispherical Isotropy	9.6	Rectangular	√3	0.7	0.7	± 3.9 %	± 3.9 %
Boundary Effects	2.0	Rectangular	√3	1	1	± 1.2 %	± 1.2 %
Linearity	4.7	Rectangular	√3	1	1	± 2.7 %	± 2.7 %
System Detection Limits	1.0	Rectangular	√3	1	1	± 0.6 %	± 0.6 %
Readout Electronics	0.3	Normal	1	1	1	± 0.3 %	± 0.3 %
Response Time	0.8	Rectangular	√3	1	1	± 0.5 %	± 0.5 %
Integration Time	2.6	Rectangular	√3	1	1	± 1.5 %	± 1.5 %
RF Ambient Noise	3.0	Rectangular	√3	1	1	± 1.7 %	± 1.7 %
RF Ambient Reflections	3.0	Rectangular	√3	1	1	± 1.7 %	± 1.7 %
Probe Positioner	0.8	Rectangular	√3	1	1	± 0.5 %	± 0.5 %
Probe Positioning	9.9	Rectangular	√3	1	1	± 5.7 %	± 5.7 %
Max. SAR Eval.	4.0	Rectangular	√3	1	1	± 2.3 %	± 2.3 %
Test Sample Related							
Device Positioning	2.9	Normal	1	1	1	± 2.9 %	± 2.9 %
Device Holder	3.6	Normal	1	1	1	± 3.6 %	± 3.6 %
Power Drift	5.0	Rectangular	√3	1	1	± 2.9 %	± 2.9 %
Phantom and Setup							
Phantom Uncertainty	4.0	Rectangular	√3	1	1	± 2.3 %	± 2.3 %
Liquid Conductivity (Target)	5.0	Rectangular	√3	0.64	0.43	± 1.8 %	± 1.2 %
Liquid Conductivity (Meas.)	2.5	Normal	1	0.64	0.43	± 1.6 %	± 1.1 %
Liquid Permittivity (Target)	5.0	Rectangular	√3	0.6	0.49	± 1.7 %	± 1.4 %
Liquid Permittivity (Meas.)	2.5	Normal	1	0.6	0.49	± 1.5 %	± 1.2 %
Combined Standard Uncertainty						± 12.8 %	± 12.6 %
Coverage Factor for 95 %						K=2	
Expanded Uncertainty						**± 25.6 %**	**± 25.2 %**

Table 17.3. Uncertainty Budget for frequency range 3 GHz to 6 GHz

17. References

[1] FCC 47 CFR Part 2 “Frequency Allocations and Radio Treaty Matters; General Rules and Regulations”

[2] ANSI/IEEE Std. C95.1-1992, “IEEE Standard for Safety Levels with Respect to Human Exposure to Radio Frequency Electromagnetic Fields, 3 kHz to 300 GHz”, September 1992

[3] IEEE Std. 1528-2003, “Recommended Practice for Determining the Peak Spatial-Average Specific Absorption Rate (SAR) in the Human Head from Wireless Communications Devices: Measurement Techniques”, December 2003

[4] SPEAG DASY System Handbook

[5] FCC KDB 248227 D01 v01r02, “SAR Measurement Procedures for 802.11 a/b/g Transmitters”, May 2007

[6] FCC KDB 447498 D01 v05r02, “Mobile and Portable Device RF Exposure Procedures and Equipment Authorization Policies”, Feb 2014

[7] FCC KDB 644545 D01 v01r02, "Guidance for IEEE 802.11ac and Pre-ac Device Emission Testing", Oct 2013.

[8] FCC KDB 941225 D01 v02, “SAR Measurement Procedures for 3G Devices – CDMA 2000 / Ev-Do / WCDMA / HSDPA / HSPA”, October 2007

[9] FCC KDB 941225 D05 v02r03, “SAR Evaluation Considerations for LTE Devices”, Dec 2013

[10] FCC KDB 941225 D06 v01r01, "SAR Evaluation Procedures for Portable Devices with Wireless Router Capabilities", May 2013.

[11] FCC KDB 865664 D01 v01r03, "SAR Measurement Requirements for 100 MHz to 6 GHz", Feb 2014.

[12] FCC KDB 865664 D02 v01r01, “RF Exposure Compliance Reporting and Documentation Considerations” May 2013.

Appendix A. Plots of System Performance Check

The plots are shown as follows.

Test Laboratory: Sporton International Inc. SAR/HAC Testing Lab Date: 2014/7/28

System Check_Body_835MHz_140728

DUT: D835V2-SN:4d151

Communication System: CW; Frequency: 835 MHz;Duty Cycle: 1:1
Medium: MSL_835_140728 Medium parameters used: f = 835 MHz; σ = 0.974 S/m; ε_r = 54.204; ρ = 1000 kg/m^3
Ambient Temperature：23.5 ℃; Liquid Temperature ：22.6 ℃

DASY5 Configuration:
- Probe: EX3DV4 - SN3911; ConvF(10.02, 10.02, 10.02); Calibrated: 2014/4/22;
- Sensor-Surface: 2mm (Mechanical Surface Detection)
- Electronics: DAE4 Sn1358; Calibrated: 2014/4/30
- Phantom: SAM2; Type: QD000P40CD; Serial: TP:1754
- Measurement SW: DASY52, Version 52.8 (5); SEMCAD X Version 14.6.8 (7028)

Pin=250mW/Area Scan (61x61x1): Interpolated grid: dx=15mm, dy=15mm
Maximum value of SAR (interpolated) = 2.53 W/kg

Pin=250mW/Zoom Scan (5x5x7)/Cube 0: Measurement grid: dx=8mm, dy=8mm, dz=5mm
Reference Value = 50.553 V/m; Power Drift = -0.07 dB
Peak SAR (extrapolated) = 3.41 W/kg
SAR(1 g) = 2.33 W/kg; SAR(10 g) = 1.56 W/kg
Maximum value of SAR (measured) = 2.50 W/kg

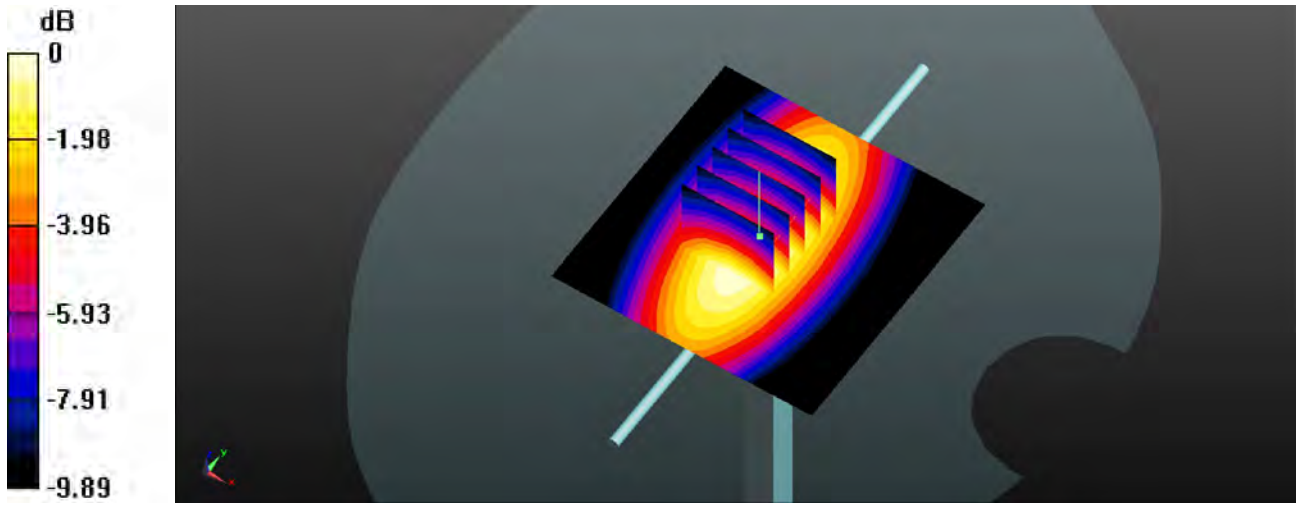

0 dB = 2.50 W/kg

Test Laboratory: Sporton International Inc. SAR/HAC Testing Lab Date: 2014/7/23

System Check_Body_1900MHz_140723

DUT: D1900V2-SN: 5d170

Communication System: CW; Frequency: 1900 MHz;Duty Cycle: 1:1
Medium: MSL_1900_140723 Medium parameters used: f = 1900 MHz; σ = 1.528 S/m; ε_r = 53.974; ρ = 1000 kg/m^3
Ambient Temperature：23.5 ℃; Liquid Temperature ：22.6 ℃

DASY5 Configuration:
- Probe: EX3DV4 - SN3911; ConvF(7.83, 7.83, 7.83); Calibrated: 2014/4/22;
- Sensor-Surface: 2mm (Mechanical Surface Detection)
- Electronics: DAE4 Sn1358; Calibrated: 2014/4/30
- Phantom: SAM2; Type: QD000P40CD; Serial: TP:1754
- Measurement SW: DASY52, Version 52.8 (5); SEMCAD X Version 14.6.8 (7028)

Pin=250mW/Area Scan (61x61x1): Interpolated grid: dx=15mm, dy=15mm
Maximum value of SAR (interpolated) = 13.0 W/kg

Pin=250mW/Zoom Scan (5x5x7)/Cube 0: Measurement grid: dx=8mm, dy=8mm, dz=5mm
Reference Value = 81.139 V/m; Power Drift = -0.01 dB
Peak SAR (extrapolated) = 16.4 W/kg
SAR(1 g) = 9.88 W/kg; SAR(10 g) = 4.88 W/kg
Maximum value of SAR (measured) = 13.0 W/kg

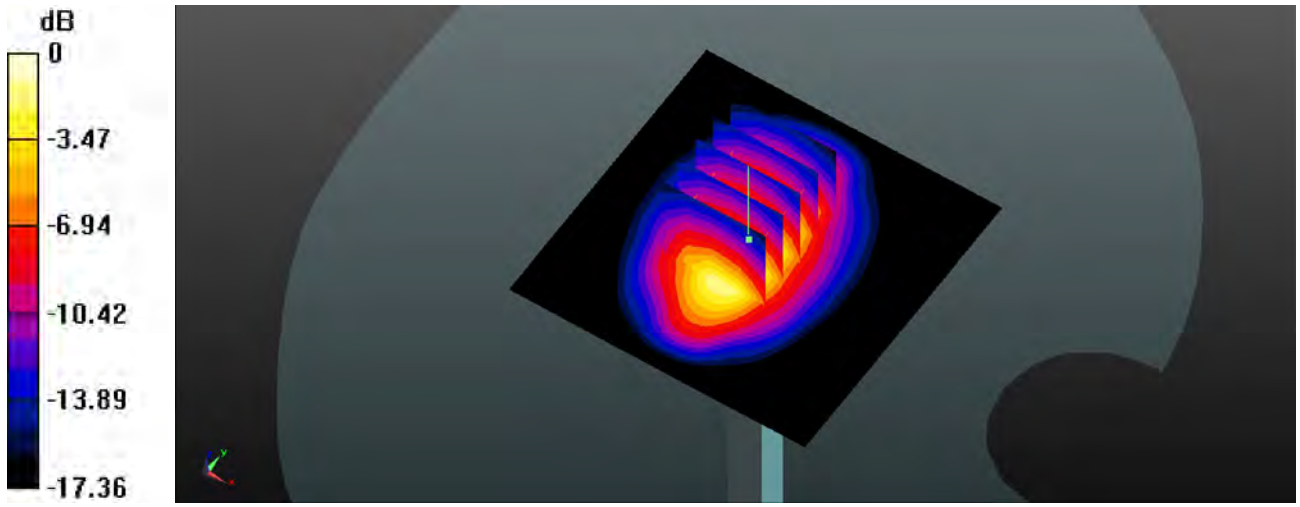

0 dB = 13.0 W/kg

Test Laboratory: Sporton International Inc. SAR/HAC Testing Lab Date: 2014/7/25

System Check_Body_2450MHz_140725

DUT: D2450V2-SN: 908

Communication System: CW; Frequency: 2450 MHz;Duty Cycle: 1:1
Medium: MSL_2450_140725 Medium parameters used: f = 2450 MHz; σ = 1.939 S/m; ε_r = 53.98; ρ = 1000 kg/m^3
Ambient Temperature：23.6 ℃; Liquid Temperature ：22.6 ℃

DASY5 Configuration:
- Probe: EX3DV4 - SN3911; ConvF(7.32, 7.32, 7.32); Calibrated: 2014/4/22;
- Sensor-Surface: 2mm (Mechanical Surface Detection)
- Electronics: DAE4 Sn1358; Calibrated: 2014/4/30
- Phantom: SAM1; Type: QD000P40CD; Serial: TP:1753
- Measurement SW: DASY52, Version 52.8 (5); SEMCAD X Version 14.6.8 (7028)

Pin=250mW/Area Scan (81x81x1): Interpolated grid: dx=12mm, dy=12mm
Maximum value of SAR (interpolated) = 19.9 W/kg

Pin=250mW/Zoom Scan (7x7x7)/Cube 0: Measurement grid: dx=5mm, dy=5mm, dz=5mm
Reference Value = 88.996 V/m; Power Drift = -0.15 dB
Peak SAR (extrapolated) = 26.7 W/kg
SAR(1 g) = 13.3 W/kg; SAR(10 g) = 6.26 W/kg
Maximum value of SAR (measured) = 20.2 W/kg

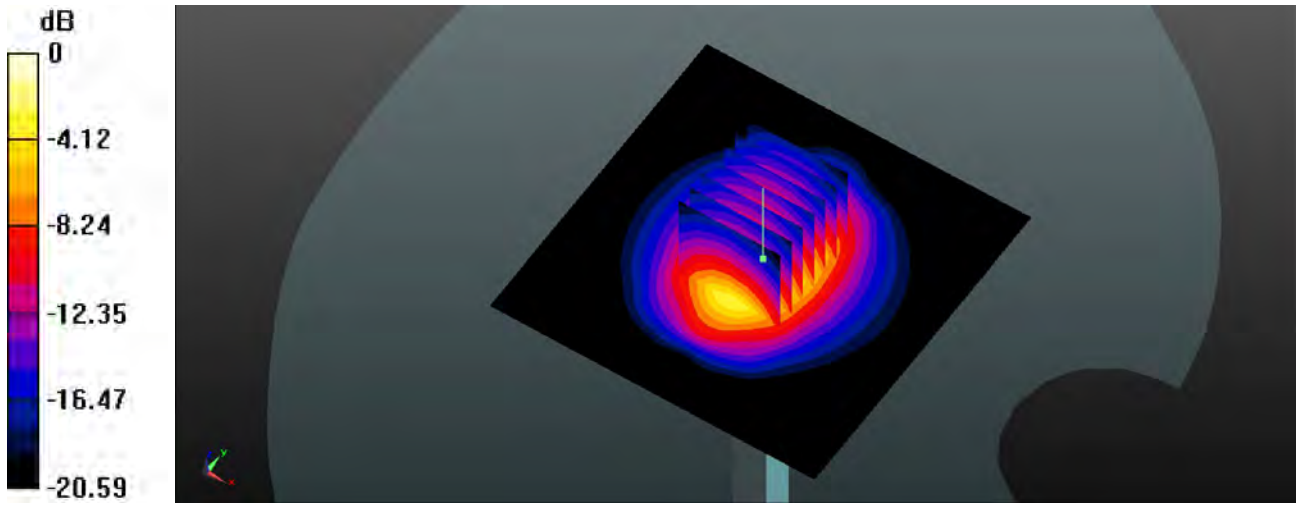

0 dB = 20.2 W/kg

Test Laboratory: Sporton International Inc. SAR/HAC Testing Lab Date: 2014.08.13

System Check_Body_2600MHz_140813

DUT: D2600V2 - SN:1061

Communication System: CW; Frequency: 2600 MHz;Duty Cycle: 1:1
Medium: MSL_2600_140813 Medium parameters used: f = 2600 MHz; σ = 2.209 mho/m; ε_r = 51.123; ρ = 1000 kg/m^3
Ambient Temperature：23.4 ℃； Liquid Temperature：22.7 ℃

DASY5 Configuration:
- Probe: EX3DV4 - SN3857; ConvF(6.82, 6.82, 6.82); Calibrated: 2014.05.23
- Sensor-Surface: 2mm (Mechanical Surface Detection)
- Electronics: DAE4 Sn1210; Calibrated: 2014.05.19
- Phantom: SAM1; Type: SAM; Serial: TP-1479
- Measurement SW: DASY52, Version 52.8 (8); SEMCAD X Version 14.4.5 (3634)

Pin=250mW/Area Scan (81x81x1): Measurement grid: dx=12mm, dy=12mm
Maximum value of SAR (interpolated) = 20.890 mW/g

Pin=250mW/Zoom Scan (7x7x7)/Cube 0: Measurement grid: dx=5mm, dy=5mm, dz=5mm
Reference Value = 83.706 V/m; Power Drift = -0.09 dB
Peak SAR (extrapolated) = 29.017 W/kg
SAR(1 g) = 13.4 mW/g; SAR(10 g) = 6.04 mW/g
Maximum value of SAR (measured) = 20.856 mW/g

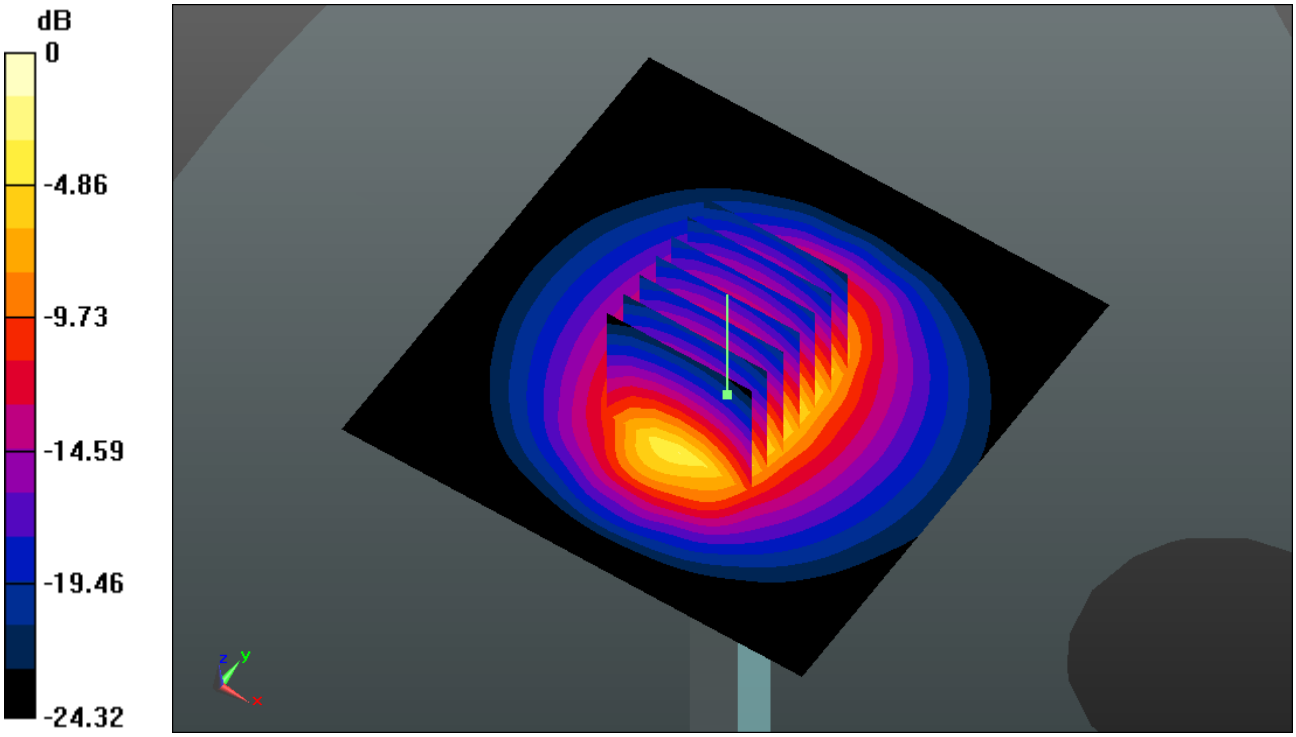

0 dB = 20.860mW/g

Test Laboratory: Sporton International Inc. SAR/HAC Testing Lab Date: 2014.08.18

System Check_Body_5200MHz_140818

DUT: D5GHzV2-SN:1006

Communication System: CW; Frequency: 5200 MHz;Duty Cycle: 1:1
Medium: MSL_5000_140818 Medium parameters used: f = 5200 MHz; σ = 5.297 mho/m; ε_r = 49.185; ρ = 1000 kg/m^3
Ambient Temperature：23.3 ℃； Liquid Temperature：22.6 ℃

DASY5 Configuration:
- Probe: EX3DV4 - SN3857; ConvF(4.54, 4.54, 4.54); Calibrated: 2014.05.23
- Sensor-Surface: 1.4mm (Mechanical Surface Detection)
- Electronics: DAE4 Sn1210; Calibrated: 2014.05.19
- Phantom: SAM1; Type: SAM; Serial: TP-1479
- Measurement SW: DASY52, Version 52.8 (8); SEMCAD X Version 14.4.5 (3634)

Pin=100mW/Area Scan (71x71x1): Measurement grid: dx=10mm, dy=10mm
Maximum value of SAR (interpolated) = 16.978 mW/g

Pin=100mW/Zoom Scan (8x8x7)/Cube 0: Measurement grid: dx=4mm, dy=4mm, dz=1.4mm
Reference Value = 40.302 V/m; Power Drift = 0.04 dB
Peak SAR (extrapolated) = 29.825 W/kg
SAR(1 g) = 7.24 mW/g; SAR(10 g) = 2.03 mW/g
Maximum value of SAR (measured) = 16.780 mW/g

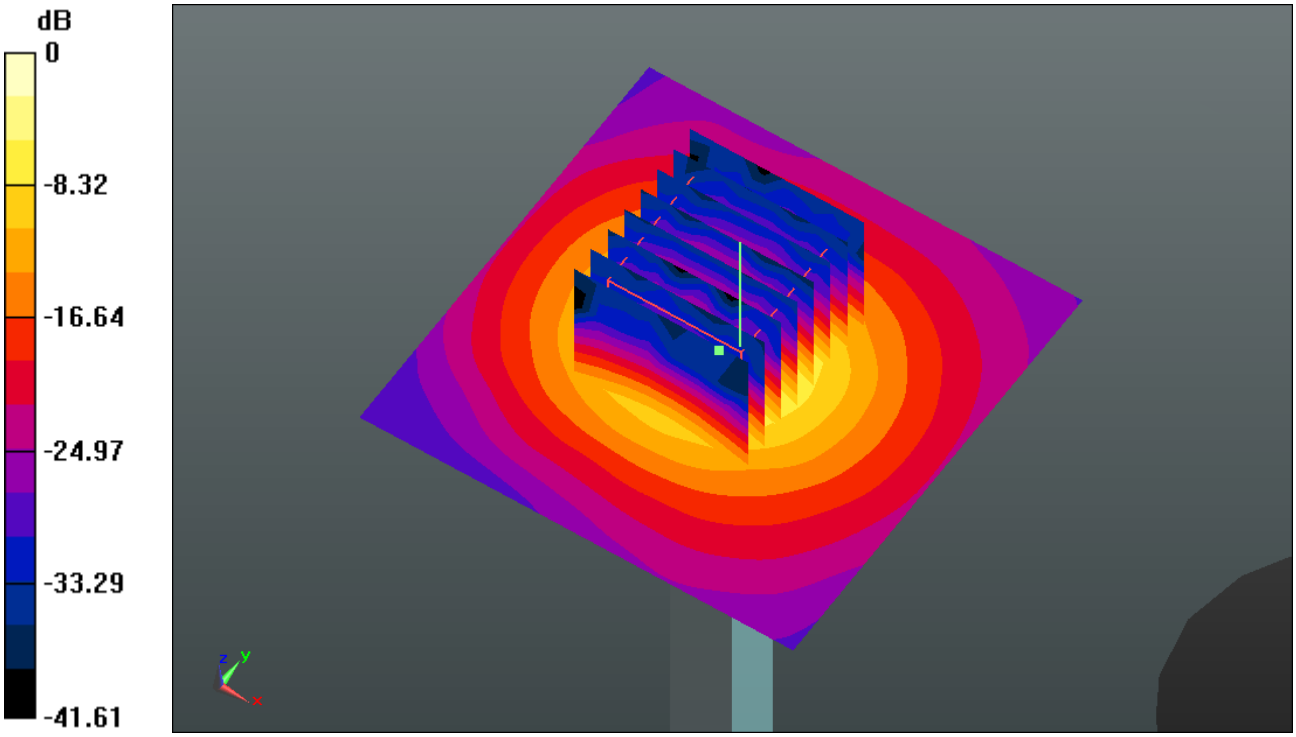

0 dB = 16.780mW/g

Test Laboratory: Sporton International Inc. SAR/HAC Testing Lab Date: 2014.08.18

System Check_Body_5800MHz_140818

DUT: D5GHzV2-SN:1006

Communication System: CW; Frequency: 5800 MHz;Duty Cycle: 1:1
Medium: MSL_5000_140818 Medium parameters used: f = 5800 MHz; σ = 6.127 mho/m; ε_r = 47.784; ρ = 1000 kg/m^3
Ambient Temperature：23.3 ℃; Liquid Temperature：22.6 ℃

DASY5 Configuration:
- Probe: EX3DV4 - SN3857; ConvF(4.21, 4.21, 4.21); Calibrated: 2014.05.23
- Sensor-Surface: 1.4mm (Mechanical Surface Detection)
- Electronics: DAE4 Sn1210; Calibrated: 2014.05.19
- Phantom: SAM1; Type: SAM; Serial: TP-1479
- Measurement SW: DASY52, Version 52.8 (8); SEMCAD X Version 14.4.5 (3634)

Pin=100mW/Area Scan (71x71x1): Measurement grid: dx=10mm, dy=10mm
Maximum value of SAR (interpolated) = 17.667 mW/g

Pin=100mW/Zoom Scan (8x8x7)/Cube 0: Measurement grid: dx=4mm, dy=4mm, dz=1.4mm
Reference Value = 36.719 V/m; Power Drift = -0.0087 dB
Peak SAR (extrapolated) = 32.163 W/kg
SAR(1 g) = 7.08 mW/g; SAR(10 g) = 1.97 mW/g
Maximum value of SAR (measured) = 17.317 mW/g

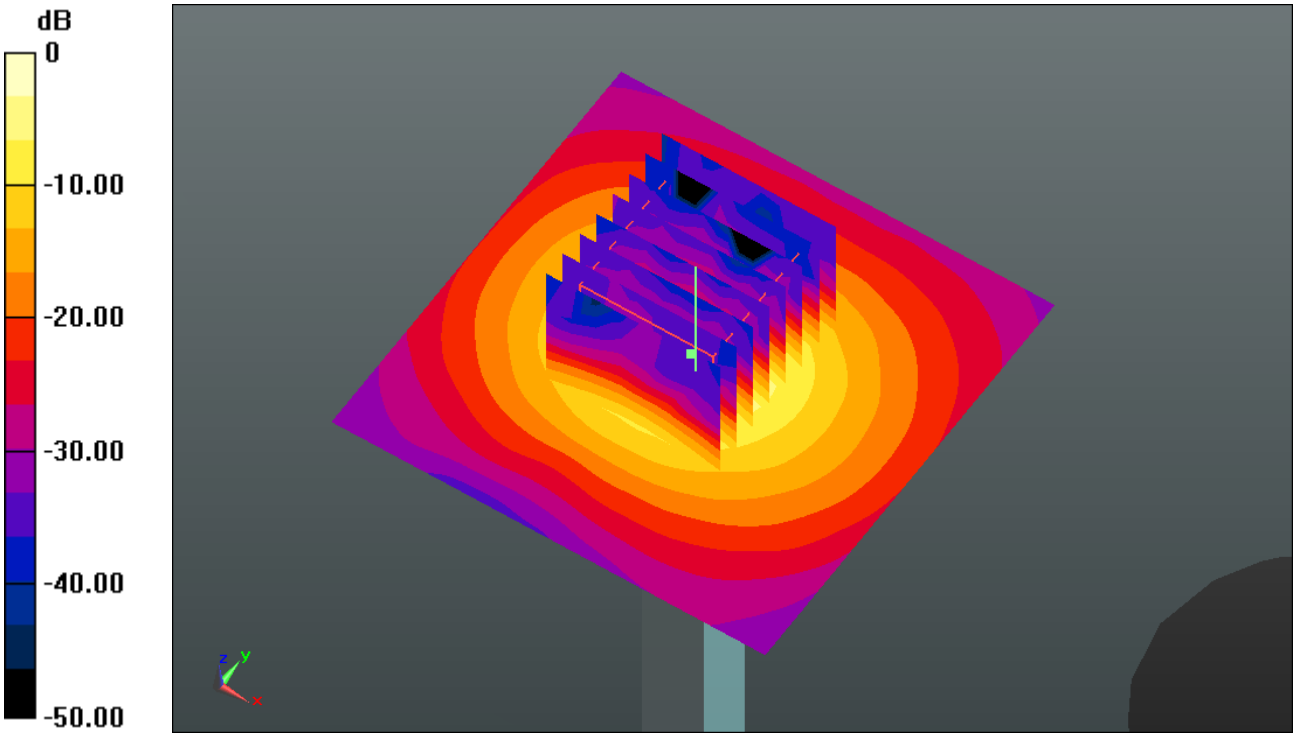

0 dB = 17.320mW/g

Appendix B. Plots of High SAR Measurement

The plots are shown as follows.

Test Laboratory: Sporton International Inc. SAR/HAC Testing Lab Date: 2014/7/23

#01 CDMA BC1_RTAP 153.6_Back_1.0cm_Ch1175

Communication System: CDMA2000; Frequency: 1908.75 MHz;Duty Cycle: 1:1
Medium: MSL_1900_140723 Medium parameters used: f = 1908.75 MHz; σ = 1.536 S/m; ε_r = 53.957; ρ = 1000 kg/m^3
Ambient Temperature：23.5 ℃; Liquid Temperature ：22.6 ℃

DASY5 Configuration:
- Probe: EX3DV4 - SN3911; ConvF(7.83, 7.83, 7.83); Calibrated: 2014/4/22;
- Sensor-Surface: 2mm (Mechanical Surface Detection)
- Electronics: DAE4 Sn1358; Calibrated: 2014/4/30
- Phantom: SAM2; Type: QD000P40CD; Serial: TP:1754
- Measurement SW: DASY52, Version 52.8 (5); SEMCAD X Version 14.6.8 (7028)

Ch1175/Area Scan (61x91x1): Interpolated grid: dx=15mm, dy=15mm
Maximum value of SAR (interpolated) = 1.59 W/kg

Ch1175/Zoom Scan (5x5x7)/Cube 0: Measurement grid: dx=8mm, dy=8mm, dz=5mm
Reference Value = 10.804 V/m; Power Drift = -0.05 dB
Peak SAR (extrapolated) = 1.71 W/kg
SAR(1 g) = 1.12 W/kg; SAR(10 g) = 0.688 W/kg
Maximum value of SAR (measured) = 1.47 W/kg

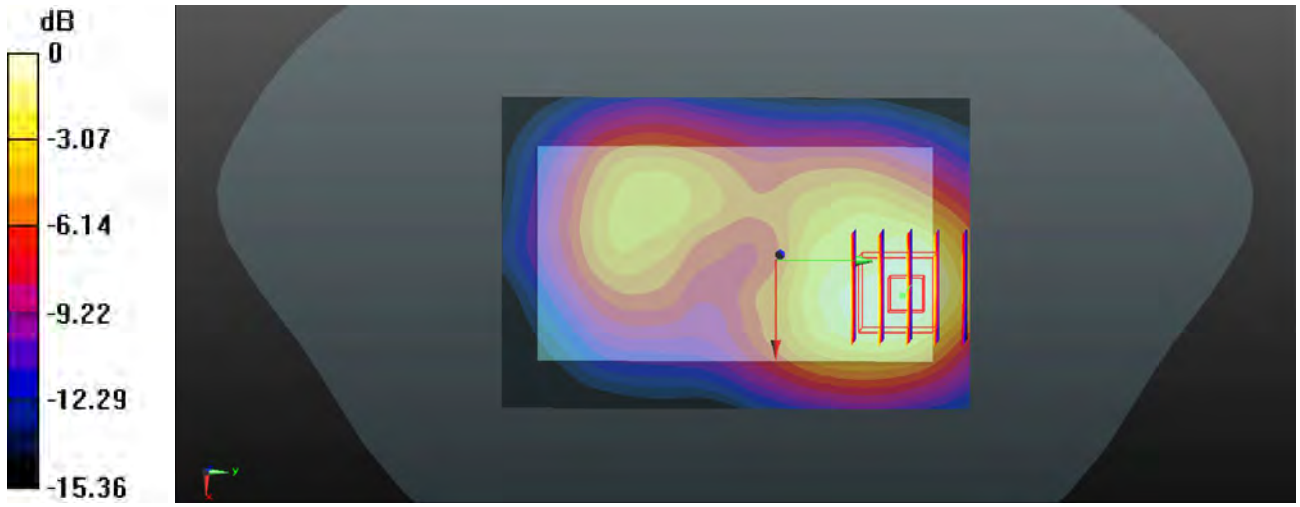

0 dB = 1.47 W/kg

Test Laboratory: Sporton International Inc. SAR/HAC Testing Lab Date: 2014/7/28

#02 LTE Band 26_QPSK_15M(1,0)_Back_1.0cm_Ch26765

Communication System: LTE; Frequency: 821.5 MHz;Duty Cycle: 1:1
Medium: MSL_835_140728 Medium parameters used: f = 821.5 MHz; σ = 0.961 S/m; ε_r = 54.313; ρ = 1000 kg/m^3
Ambient Temperature：23.5 ℃; Liquid Temperature ：22.6 ℃

DASY5 Configuration:
- Probe: EX3DV4 - SN3911; ConvF(10.02, 10.02, 10.02); Calibrated: 2014/4/22;
- Sensor-Surface: 2mm (Mechanical Surface Detection)
- Electronics: DAE4 Sn1358; Calibrated: 2014/4/30
- Phantom: SAM2; Type: QD000P40CD; Serial: TP:1754
- Measurement SW: DASY52, Version 52.8 (5); SEMCAD X Version 14.6.8 (7028)

Ch26765/Area Scan (61x91x1): Interpolated grid: dx=15mm, dy=15mm
Maximum value of SAR (interpolated) = 0.854 W/kg

Ch26765/Zoom Scan (5x5x7)/Cube 0: Measurement grid: dx=8mm, dy=8mm, dz=5mm
Reference Value = 26.857 V/m; Power Drift = -0.02 dB
Peak SAR (extrapolated) = 0.920 W/kg
SAR(1 g) = 0.750 W/kg; SAR(10 g) = 0.584 W/kg
Maximum value of SAR (measured) = 0.848 W/kg

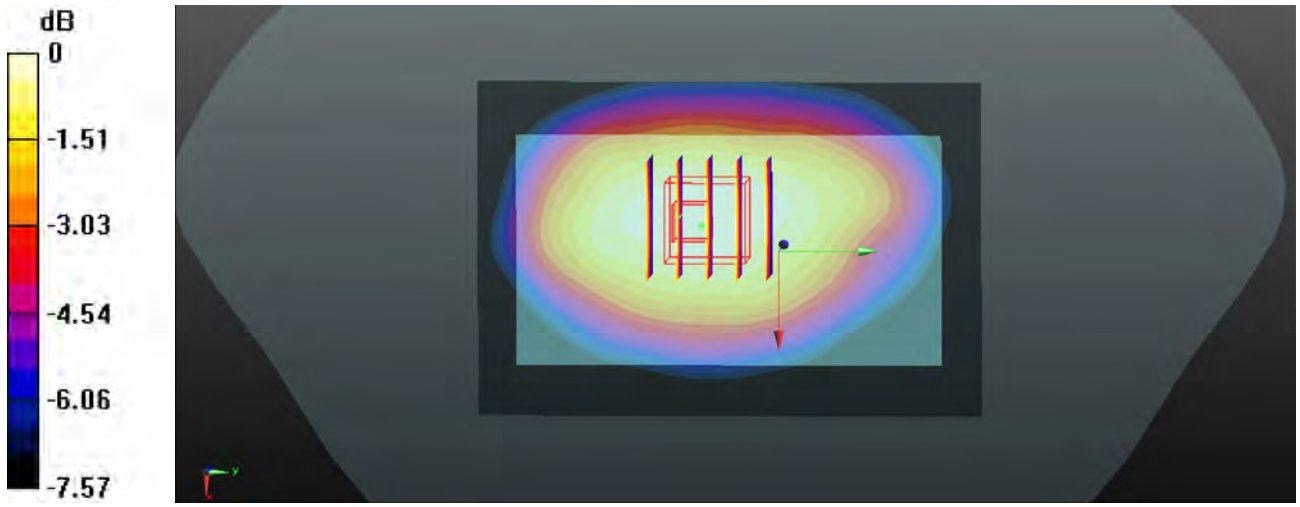

0 dB = 0.848 W/kg

Test Laboratory: Sporton International Inc. SAR/HAC Testing Lab Date: 2014/7/23

#03 LTE Band 25_QPSK_20M(1,0)_Front_1.0cm_Ch26140

Communication System: LTE; Frequency: 1860 MHz;Duty Cycle: 1:1
Medium: MSL_1900_140723 Medium parameters used: f = 1860 MHz; σ = 1.481 S/m; ε_r = 54.05; ρ = 1000 kg/m^3
Ambient Temperature：23.5 ℃; Liquid Temperature ：22.6 ℃

DASY5 Configuration:
- Probe: EX3DV4 - SN3911; ConvF(7.83, 7.83, 7.83); Calibrated: 2014/4/22;
- Sensor-Surface: 2mm (Mechanical Surface Detection)
- Electronics: DAE4 Sn1358; Calibrated: 2014/4/30
- Phantom: SAM2; Type: QD000P40CD; Serial: TP:1754
- Measurement SW: DASY52, Version 52.8 (5); SEMCAD X Version 14.6.8 (7028)

Ch26140/Area Scan (61x91x1): Interpolated grid: dx=15mm, dy=15mm
Maximum value of SAR (interpolated) = 0.756 W/kg

Ch26140/Zoom Scan (5x5x7)/Cube 0: Measurement grid: dx=8mm, dy=8mm, dz=5mm
Reference Value = 9.641 V/m; Power Drift = -0.05 dB
Peak SAR (extrapolated) = 0.836 W/kg
SAR(1 g) = 0.569 W/kg; SAR(10 g) = 0.369 W/kg
Maximum value of SAR (measured) = 0.727 W/kg

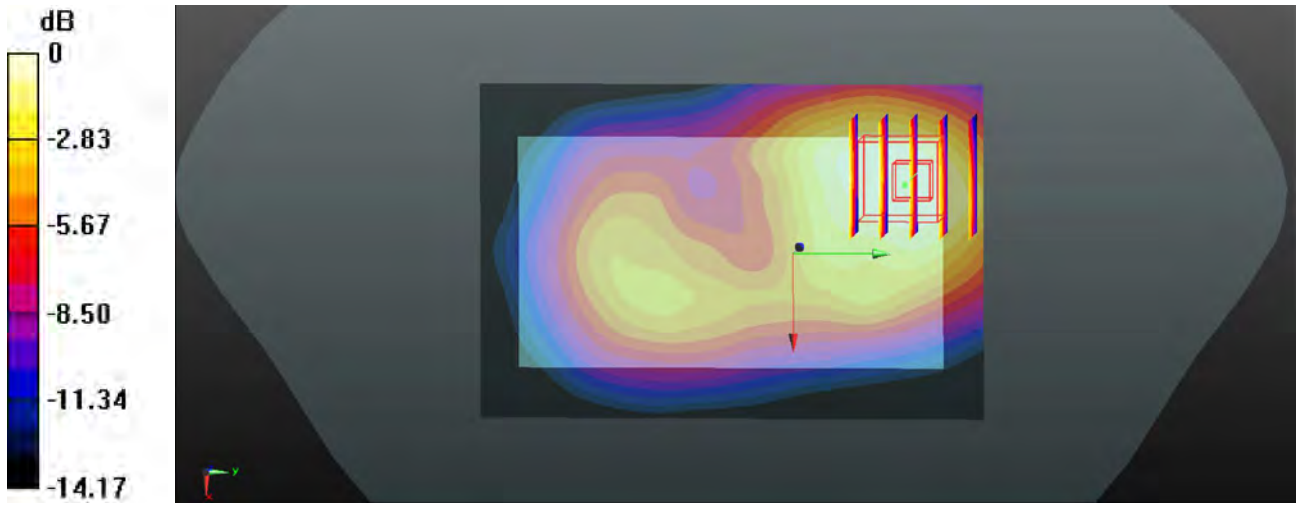

0 dB = 0.727 W/kg

Test Laboratory: Sporton International Inc. SAR/HAC Testing Lab Date: 2014.08.13

#04_TDD Band41_QPSK(1,0)_Right Side 1cm_Ch41055

Communication System: TDD_LTE (0); Frequency: 2636.5 MHz;Duty Cycle: 1:1.59
Medium: MSL_2600_140813 Medium parameters used: f = 2636.5 MHz; σ = 2.184 mho/m; ε_r = 51.102; ρ = 1000 kg/m^3
Ambient Temperature：23.4 ℃； Liquid Temperature：22.7 ℃

DASY5 Configuration:
- Probe: EX3DV4 - SN3857; ConvF(6.82, 6.82, 6.82); Calibrated: 2014.05.23
- Sensor-Surface: 2mm (Mechanical Surface Detection)
- Electronics: DAE4 Sn1210; Calibrated: 2014.05.19
- Phantom: SAM1; Type: SAM; Serial: TP-1479
- Measurement SW: DASY52, Version 52.8 (8); SEMCAD X Version 14.4.5 (3634)

Ch41055/Area Scan (41x71x1): Measurement grid: dx=12mm, dy=12mm
Maximum value of SAR (interpolated) = 1.756 mW/g

Ch41055/Zoom Scan (7x7x7)/Cube 0: Measurement grid: dx=5mm, dy=5mm, dz=5mm
Reference Value = 21.002 V/m; Power Drift = 0.12 dB
Peak SAR (extrapolated) = 2.310 W/kg
SAR(1 g) = 1.15 mW/g; SAR(10 g) = 0.551 mW/g
Maximum value of SAR (measured) = 1.710 mW/g

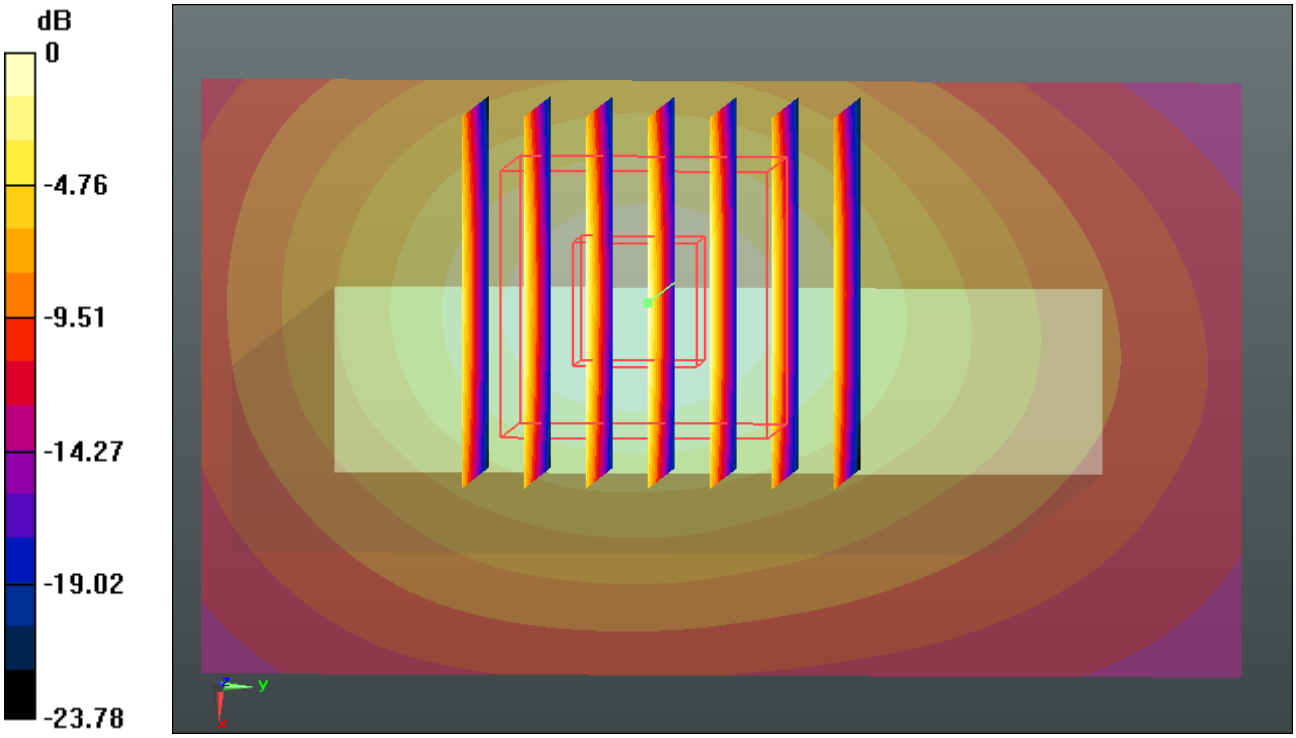

0 dB = 1.710mW/g

Test Laboratory: Sporton International Inc. SAR/HAC Testing Lab Date: 2014/7/25

#05 WLAN2.4GHz_802.11b 1Mbps_Bottom side_1.0cm_Ch11_Ant.0+1

Communication System: 802.11b; Frequency: 2462 MHz;Duty Cycle: 1:1
Medium: MSL_2450_140725 Medium parameters used: f = 2462 MHz; σ = 1.964 S/m; ε_r = 53.919; ρ = 1000 kg/m^3
Ambient Temperature：23.6 ℃; Liquid Temperature ：22.6 ℃

DASY5 Configuration:
- Probe: EX3DV4 - SN3911; ConvF(7.32, 7.32, 7.32); Calibrated: 2014/4/22;
- Sensor-Surface: 2mm (Mechanical Surface Detection)
- Electronics: DAE4 Sn1358; Calibrated: 2014/4/30
- Phantom: SAM1; Type: QD000P40CD; Serial: TP:1753
- Measurement SW: DASY52, Version 52.8 (5); SEMCAD X Version 14.6.8 (7028)

Ch11/Area Scan (31x111x1): Interpolated grid: dx=12mm, dy=12mm
Maximum value of SAR (interpolated) = 0.457 W/kg

Ch11/Zoom Scan (7x7x7)/Cube 0: Measurement grid: dx=5mm, dy=5mm, dz=5mm
Reference Value = 10.087 V/m; Power Drift = -0.08 dB
Peak SAR (extrapolated) = 0.542 W/kg
SAR(1 g) = 0.324 W/kg; SAR(10 g) = 0.189 W/kg
Maximum value of SAR (measured) = 0.435 W/kg

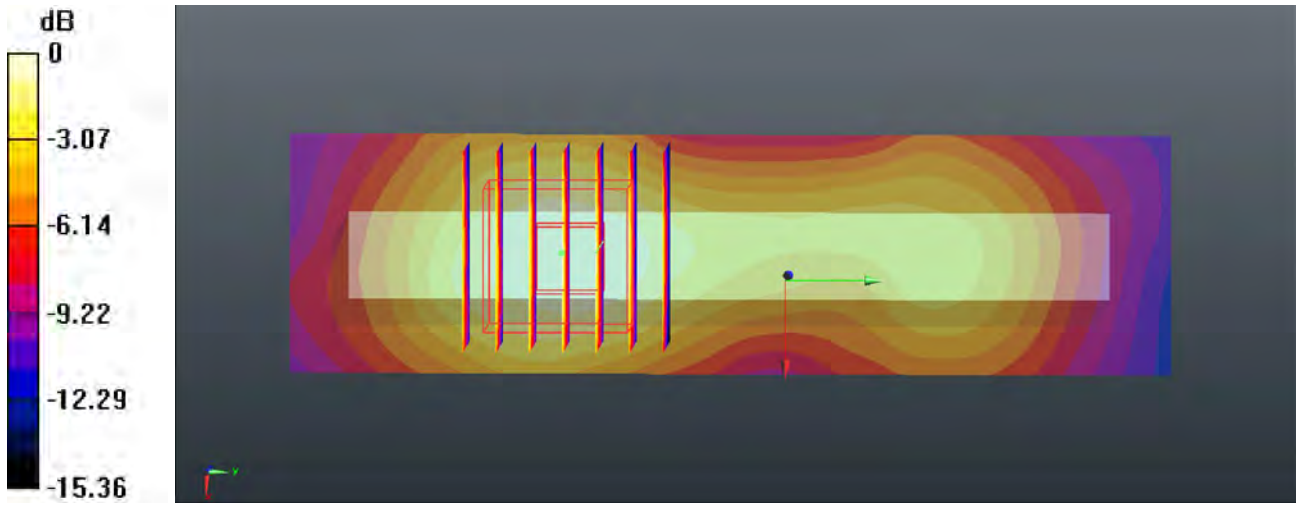

0 dB = 0.435 W/kg

Test Laboratory: Sporton International Inc. SAR/HAC Testing Lab Date: 2014.08.18

#06_WLAN 5.2GHz_802.11a 6Mbps_Top Side 1cm_Ch44

Communication System: WIFI (0); Frequency: 5220 MHz;Duty Cycle: 1:1.05
Medium: MSL_5000_140818 Medium parameters used: f = 5220 MHz; σ = 5.33 mho/m; ε_r = 49.157; ρ = 1000 kg/m^3
Ambient Temperature：23.3 ℃； Liquid Temperature：22.6 ℃

DASY5 Configuration:
- Probe: EX3DV4 - SN3857; ConvF(4.54, 4.54, 4.54); Calibrated: 2014.05.23
- Sensor-Surface: 1.4mm (Mechanical Surface Detection)
- Electronics: DAE4 Sn1210; Calibrated: 2014.05.19
- Phantom: SAM1; Type: SAM; Serial: TP-1479
- Measurement SW: DASY52, Version 52.8 (8); SEMCAD X Version 14.4.5 (3634)

Ch44/Area Scan (51x141x1): Measurement grid: dx=10mm, dy=10mm
Maximum value of SAR (interpolated) = 1.206 mW/g

Ch44/Zoom Scan (8x8x7)/Cube 0: Measurement grid: dx=4mm, dy=4mm, dz=1.4mm
Reference Value = 10.147 V/m; Power Drift = 0.07 dB
Peak SAR (extrapolated) = 1.512 W/kg
SAR(1 g) = 0.578 mW/g; SAR(10 g) = 0.177 mW/g
Maximum value of SAR (measured) = 1.118 mW/g

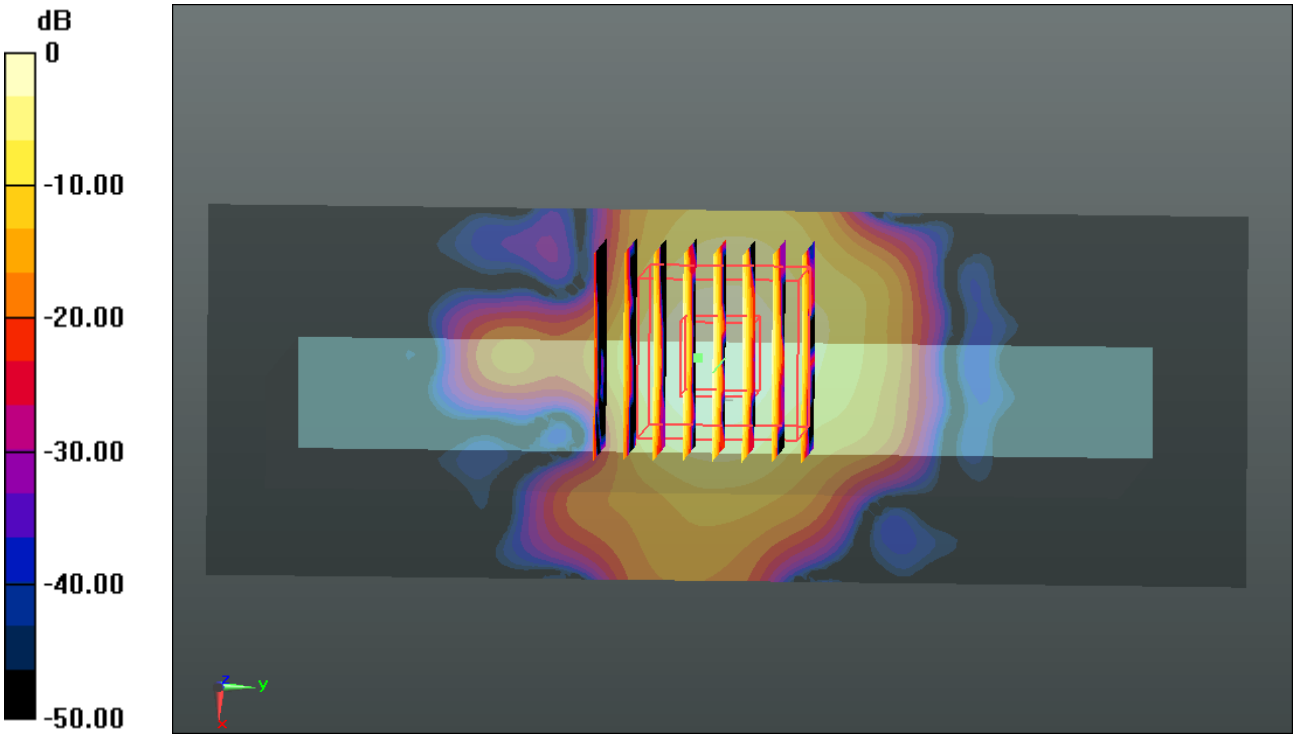

0 dB = 1.120mW/g

Test Laboratory: Sporton International Inc. SAR/HAC Testing Lab Date: 2014.08.18

#07_WLAN 5.8GHz 802.11ac-VHT20_MCS0_Bottom Side 1cm_Ch165_Ant.0+1

Communication System: WIFI (0); Frequency: 5825 MHz;Duty Cycle: 1:1.04
Medium: MSL_5000_140818 Medium parameters used: f = 5825 MHz; σ = 6.166 mho/m; ε_r = 47.679; ρ = 1000 kg/m^3
Ambient Temperature：23.3 ℃； Liquid Temperature：22.6 ℃

DASY5 Configuration:
- Probe: EX3DV4 - SN3857; ConvF(4.21, 4.21, 4.21); Calibrated: 2014.05.23
- Sensor-Surface: 1.4mm (Mechanical Surface Detection)
- Electronics: DAE4 Sn1210; Calibrated: 2014.05.19
- Phantom: SAM1; Type: SAM; Serial: TP-1479
- Measurement SW: DASY52, Version 52.8 (8); SEMCAD X Version 14.4.5 (3634)

Ch165/Area Scan (51x141x1): Measurement grid: dx=10mm, dy=10mm
Maximum value of SAR (interpolated) = 1.427 mW/g

Ch165/Zoom Scan (8x8x7)/Cube 0: Measurement grid: dx=4mm, dy=4mm, dz=1.4mm
Reference Value = 6.483 V/m; Power Drift = -0.02 dB
Peak SAR (extrapolated) = 1.866 W/kg
SAR(1 g) = 0.714 mW/g; SAR(10 g) = 0.248 mW/g
Maximum value of SAR (measured) = 1.348 mW/g

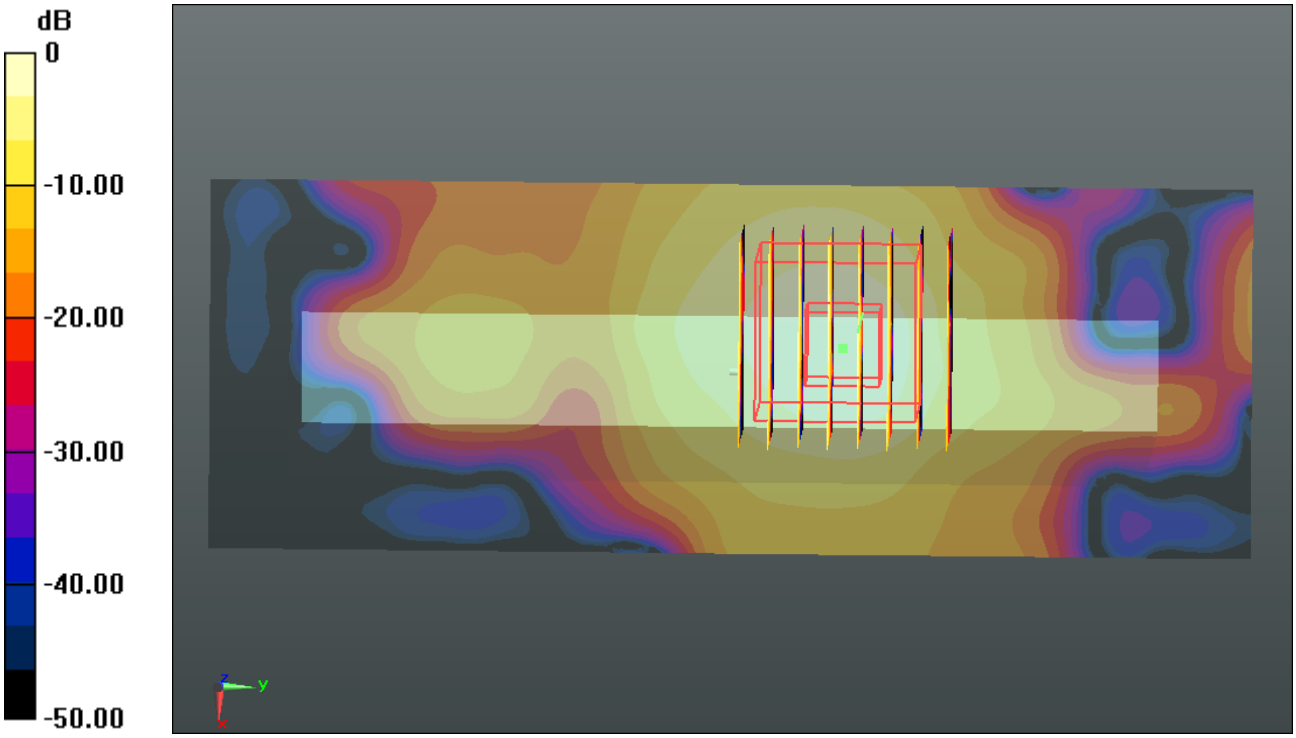

0 dB = 1.350mW/g