Welink Your Smart

Hardware Development Guide of Module Product

Version 1.0，2015-03-18

ZTE MG2618

Legal Information

By accepting this certain document of ZTE CORPORATIN you agree to the following terms. If you do not agree to the following terms, please notice that you are not allowed to use this document.

Copyright © 2009 ZTE CORPORATION. Any rights not expressly granted herein are reserved. This document contains proprietary information of ZTE CORPORATION. Any reproduction, transfer, distribution, use or disclosure of this document or any portion of this document, in any form by any means, without the prior written consent of ZTE CORPORATION is prohibited.

ZTE and ZTE中兴 are registered trademarks of ZTE CORPORATION. ZTE's company name, logo and product names referenced herein are either trademarks or registered trademarks of ZTE CORPORATION. Other product and company names mentioned herein may be trademarks or trade names of their respective owners. Without the prior written consent of ZTE CORPORATION or the third party owner thereof, anyone's access to this document should not be construed as granting, by implication, estopped or otherwise, any license or right to use any marks appearing in the document.

The design of this product complies with requirements of environmental protection and personal security. This product shall be stored, used or discarded in accordance with product manual, relevant contract or laws and regulations in relevant country (countries).

This document is provided "as is" and "as available". Information contained in this document is subject to continuous update without further notice due to improvement and update of ZTE CORPORATION's products and technologies.

Revision History

Version	Date	Description
V1.0	2015-03-18	1st released

All Rights reserved, No Spreading abroad without Permission of ZTE

Contents

1 PRODUCT OVERVIEW 1

1.1 TECHNICAL PARAMETERS 1

1.2 APPLICATION FRAME 2

1.3 ABBREVIATIONS 3

2 INTERFACES 6

2.1 PIN DESCRIPTION 6

2.2 ANTENNA INTERFACE 8

2.3 RF PERFORMANCE OF ANTENNA INTERFACE 8

3 ELECTRIC FEATURES 10

3.1 INTERFACE POWER LEVEL 10

3.2 POWER CONSUMPTION 10

3.3 POWER-ON/OFF TIMING SEQUENCE 11

3.4 RELIABILITY TEST 11

3.5 ESD CHARACTERISTIC 12

3.6 GPS PERFORMANCE 12

4 REFERENCE CIRCUIT OF MODULE INTERFACES 13

4.1 RESET AND POWER DESIGNING 13

4.2 UART INTERFACE 15

4.2.1 DUPLEX UART INTERFACE 17

4.3 SIM CARD INTERFACE 18

4.4 AUDIO INTERFACE 19

4.5 LED INDICATOR INTERFACE 22

4.6 GPS INTERFACE 22

4.7 CONNECTION METHOD OF GPS ACTIVE ANTENNA 23

5 MECHANIC FEATURES 24

5.1 APPEARANCE DIAGRAM 24

5.2 ASSEMBLY DIAGRAM 25

5.3 PCB PACKAGE DIMENSIONS 26

All Rights reserved, No Spreading abroad without Permission of ZTE

6 SMT PROCESS AND BAKING GUIDE 28

6.1 STORAGE REQUIREMENTS 28

6.2 RECOMMENDED PAD DESIGN 28

6.3 REQUIREMENTS OF MODULE'S POSITION ON MAIN BOARD 30

6.4 MODULE PLANENESS STANDARD 31

6.5 PROCESS ROUTING SELECTION 31

6.5.1 SOLDER PASTE SELECTION 31

6.5.2 DESIGN OF MODULE PAD'S STEEL MESH OPENING ON MAIN BOARD . 31

6.5.3 MODULE BOARD'S SMT PROCESS 32

6.5.4 MODULE SOLDERING REFLOW CURVE 33

6.5.5 REFLOW METHOD 34

6.5.6 MAINTENANCE OF DEFECTS 34

6.6 MODULE'S BAKING REQUIREMENTS 35

6.6.1 MODULE'S BAKING ENVIRONMENT 35

6.6.2 BAKING DEVICE AND OPERATION PROCEDURE 35

6.6.3 MODULE BAKING CONDITIONS 35

7 SAFETY INFORMATION 36

All Rights reserved, No Spreading abroad without Permission of ZTE

Figures

Figure 1–1 Application Frame 3
Figure 3–1 Power-on/off timing sequence 11
Figure 4–1 Reference Circuit of Power Supply & Reset Interface 14
Figure 4–2 Reference Circuit of Power Supply Interface 14
Figure 4–3 Reference Circuit 1 of UART Interface 16
Figure 4–4 Reference Circuit 2 of UART Interface 16
Figure 4–5 UART Connection between DCE－DTE 17
Figure 4–6 Reference Circuit of SIM Card Interface 19
Figure 4–7 MIC reference circuit 20
Figure 4–8 SPK reference circuit 21
Figure 4–9 Reference Circuit of Status Indicator 22
Figure 4–10 Reference Circuit of GPS Interface 23
Figure 4–11 Active GPS antenna circuit reference design principle diagram 23
Figure 5–1 Top & bottom & side view of module 24
Figure 5–2 The assembly diagram of module 25
Figure 5–3 The PCB package dimensions of module (Top View) 26
Figure 5–4 Test point of module 27
Figure 6–1 Module’s dimensions 29
Figure 6–2 Recommended PAD dimensions on corresponding main board 29
Figure 6–3 Module board’s PAD mounted on main board 30
Figure 6–4 Green oil and white oil at module’s position on main board 30
Figure 6–5 Module Board’s Steel Mesh Diagram 32
Figure 6–6 Material Module Pallet 33
Figure 6–7 Module Furnace Temperature Curve Diagram 34

All Rights reserved, No Spreading abroad without Permission of ZTE

Tables

Table 1–1 The function information of module 1
Table 1–2 Major Technical Parameters 1
Table 1–3 Abbreviation List 3
Table 2–1 PIN Interface Definition 6
Table 2–2 RF Performance of antenna interface 8
Table 3–1 Power Level Range of Digital Signal 10
Table 3–2 Power Consumption of Module (Typical) 10
Table 3–3 Module testing environment of temperature 11
Table 3–4 ESD Endurance 12
Table 3–5 GPS Performance 12
Table 4–1 Working Condition 13
Table 4–2 UART Interface Definition 17
Table 4–3 Definition of SIM Card Signal 18
Table 4–4 Audio interface definition 19
Table 4–5 Definition of LED Indicator Status 22
Table 6–1 Baking parameters 28
Table 6–2 Recommended PAD dimensions of main board 30
Table 6–3 LCC module PAD's steel mesh opening 31

All Rights reserved, No Spreading abroad without Permission of ZTE

R&TTE Regulation:

In all cases assessment of the final product must be mass against the Essential requirements of the R&TTE Directive Articles 3.1(a) and (b), safety and EMC respectively, as well as any relevant Article 3.3 requirements.

CE 0560

Hereby, ZTE CORPORATION declares that this product is in complies with the essential requirements of Article 3 of the R&TTE 1999/5/EC Directive.

All Rights reserved, No Spreading abroad without Permission of ZTE

Federal Communication Commission Interference Statement

This device complies with Part 15 of the FCC Rules. Operation is subject to the following two conditions: (1) This device may not cause harmful interference, and (2) this device must accept any interference received, including interference that may cause undesired operation.

This equipment has been tested and found to comply with the limits for a Class B digital device, pursuant to Part 15 of the FCC Rules. These limits are designed to provide reasonable protection against harmful interference in a residential installation. This equipment generates, uses and can radiate radio frequency energy and, if not installed and used in accordance with the instructions, may cause harmful interference to radio communications. However, there is no guarantee that interference will not occur in a particular installation. If this equipment does cause harmful interference to radio or television reception, which can be determined by turning the equipment off and on, the user is encouraged to try to correct the interference by one of the following measures:

- Reorient or relocate the receiving antenna.
- Increase the separation between the equipment and receiver.
- Connect the equipment into an outlet on a circuit different from that to which the receiver is connected.
- Consult the dealer or an experienced radio/TV technician for help.

Radiation Exposure Statement:
This equipment complies with FCC radiation exposure limits set forth for an uncontrolled environment. This equipment should be installed and operated with minimum distance 20cm between the radiator & your body.

End Product Labeling
The final end product must be labeled in a visible area with the following: "**Contains FCC ID: SRQ-ZTEMG2618**". The grantee's FCC ID can be used only when all FCC compliance requirements are met.The FCC part15.19 staement below has also be available on the label:The device complies with part 15 of FCC rules,Operation is sugject to the following two conditions:(1)This device may not cause harmful interference,and(2)this device must accept any interference received,including interference that may cause undesired operation,to comply With FCC regulations limiting both maximum RF output power and human exposure to RF radiation.
A user maual with the end product must clearly indicate the operating requirements and conditions that must be observed to ensure compliance with current FCC RF exposure Guidelines,The end product with an module may also need to pass the FCC part15 unintentional emission testing requirements and be properly authorized for FCC part15.Note:If thie module is intended for use in a portable device,you are responsinble For separate approval to satify the SAR requirements of FCC part2.1093

This device is intended only for OEM integrators under the following conditions:
1)The antenna must be installed such that 20 cm is maintained between the antenna and users, and the maximum antenna gain allowed for use with this device is 3 dBi.
2)The transmitter module may not be co-located with any other transmitter or antenna.

All Rights reserved, No Spreading abroad without Permission of ZTE

1 Product Overview

MG2618 is a GSM/GPRS wireless industrial module, and it contains three variants V2A, V2B and V2C. Customer can choose the dedicated type based on the wireless network configuration. The following table shows the entire configuration of MG2618 series.

Table 1–1 The function information of module

SN	PID	BAND	GPS
1	V2A	GSM 900/1800	Not support
2	V2B	GSM 850/900/1800/1900	Not support
3	V2C	GSM 850/900/1800/1900	Support

MG2618 is a wireless Internet module with 49 pin LCC interface. It is widely applied to but not limited to the various products and equipment such as laptops, vehicle-mounted terminals, and electric devices, by providing data services, transceiver Email, web browsing, high speed download and so on.

In places with GSM network coverage, you can send and receive SMS, use high-speed data access service, voice calls and other functions under the mobile environment. The module provides users with a high degree of freedom, convenient solution to realize mobile office dreams.

This section describes the basic functions and logic diagram of the module.

1.1 Technical Parameters

Table 1–2 Major Technical Parameters

Items	Parameters
Basic Features	
Bands	GSM850/EGSM900/DCS1800/PCS1900(Optional)
Dimensions	22.00mm*20.00mm*2.0mm
Weight	About 1.9g
Normal Working Temperature	-35~75℃
Extreme Working Temperature	-40~85℃
Storage Temperature	-50~90°C
Humidity	0% ~ 95%
Performance	
Power Supply	The range of voltage supply is 3.4V-4.2V, typical value: 3.8V
Max. Transmitter Power	33±2dBm @ GSM850/GSM900

All Rights reserved, No Spreading abroad without Permission of ZTE

Items	Parameters
	30±2dBm @ DCS1800/PCS1900
Receiving sensitivity	-108dBm @ GSM850/GSM900 -106dBm @ DCS1800/PCS1900
Interface	
Encapsulation type	49 Pin LCC
Antenna interface	LCC pad
UART Interface	AT commands, data transmission
SIM card Interface	1.8V/3V
Data Service	
Service	GPRS, Class A or B, Class 10 or 12
GPRS Mobile station	Class C
GPRS class	Class 12
Max. DL Data rate	85.6Kbps
Max. UL Data rate	42.8Kbps
Protocols	Embedded TCP/IP and UDP/IP protocol stack
	TCP Server, UDP Server
	Embedded FTP
SMS	
	Support TEXT/PDU mode
	Point-to-point MO/MT
	SMS Cell Broadcast
AT Commands	
	Static AT commands set
	Extended AT commands set

1.2 Application Frame

The application frame of module is as follows:

All Rights reserved, No Spreading abroad without Permission of ZTE

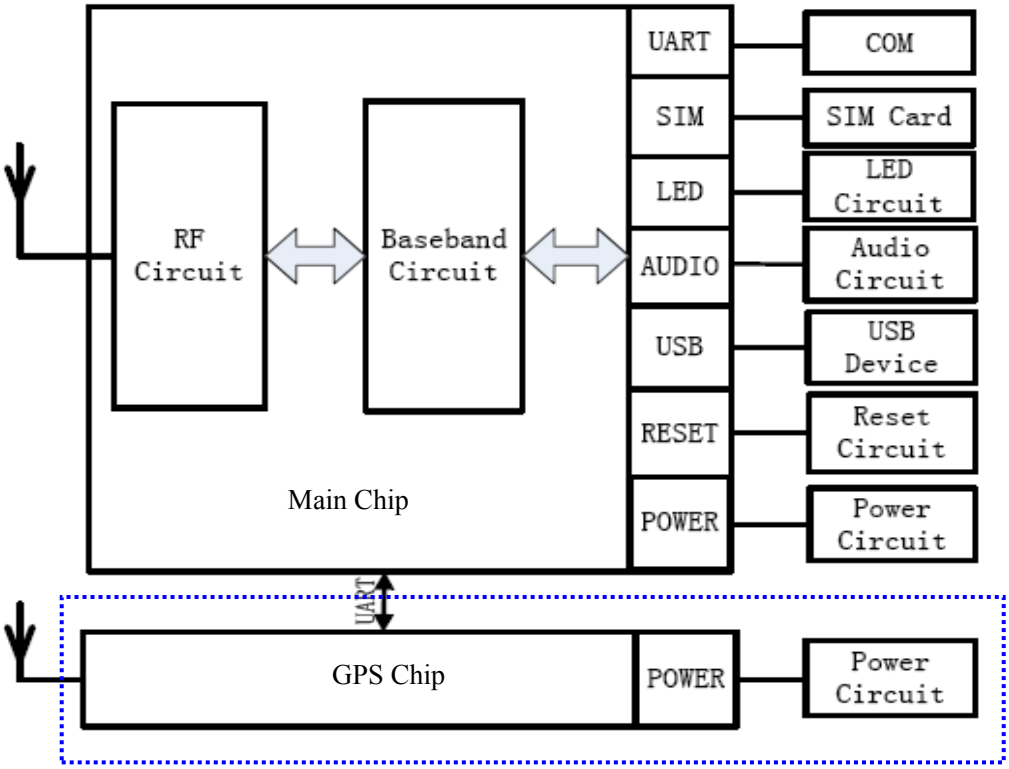

Figure 1–1 Application Frame

Note: Only the modules which support GPS function have the function of GPS as shown in Blue Block Diagram above.

1.3 Abbreviations

Table 1–3 Abbreviation List

A		
ADC	Analog-Digital Converter	模数转换
AFC	Automatic Frequency Control	自动频率控制
AGC	Automatic Gain Control	自动增益控制
ARFCN	Absolute Radio Frequency Channel Number	绝对射频信道号
ARP	Antenna Reference Point	天线参考点
ASIC	Application Specific Integrated Circuit	专用集成电路
B		
BER	Bit Error Rate	比特误码率
BTS	Base Transceiver Station	基站收发信台
C		
CDMA	Code Division Multiple Access	码分多址
CDG	CDMA Development Group	CDMA 发展组织

All Rights reserved, No Spreading abroad without Permission of ZTE

CNR	Carrier Noise Ratio	载噪比
CSD	Circuit Switched Data	电路交换数据
CPU	Central Processing Unit	中央处理单元
D		
DAC	Digital-to-Analog Converter	数模转换
DCE	Data Communication Equipment	数据通讯设备
DSP	Digital Signal Processor	数字信号处理
DTE	Data Terminal Equipment	数据终端设备
DTMF	Dual Tone Multi-Frequency	双音多频
DTR	Data Terminal Ready	数据终端准备好
E		
EFR	Enhanced Full Rate	增强型全速率
EGSM	Enhanced GSM	增强型 GSM
EMC	Electromagnetic Compatibility	电磁兼容
EMI	Electro Magnetic Interference	电磁干扰
ESD	Electronic Static Discharge	静电放电
ETS	European Telecommunication Standard	欧洲通信标准
F		
FDMA	Frequency Division Multiple Access	频分多址
FR	Full Rate	全速率
G		
GPRS	General Packet Radio Service	通用分组无线业务
GSM	Global Standard for Mobile Communications	全球移动通讯系统
H		
HR	Half Rate	半速率
I		
IC	Integrated Circuit	集成电路
IMEI	International Mobile Equipment Identity	国际移动设备标识
ISO	International Standards Organization	国际标准化组织
ITU	International Telecommunications Union	国际电信联盟
L		
LCD	Liquid Crystal Display	液晶显示器
LED	Light Emitting Diode	发光二极管
M		
MCU	Machine Control Unit	机器控制单元
MMI	Man Machine Interface	人机交互接口/人机界面
MS	Mobile Station	移动台
P		
PCB	Printed Circuit Board	印刷电路板
PCL	Power Control Level	功率控制等级
PCS	Personal Communication System	个人通讯系统

All Rights reserved, No Spreading abroad without Permission of ZTE

PDU	Protocol Data Unit	协议数据单元
PPP	Point-to-point protocol	点到点协议
R		
RAM	Random Access Memory	随机访问存储器
RF	Radio Frequency	无线频率
ROM	Read-only Memory	只读存储器
RTC	Real Time Clock	实时时钟
S		
SIM	Subscriber Identification Module	用户识别卡
SMS	Short Message Service	短消息服务
SRAM	Static Random Access Memory	静态随机访问存储器
T		
TA	Terminal adapter	终端适配器
TDMA	Time Division Multiple Access	时分多址
TE	Terminal Equipment also referred it as DTE	终端设备，也指 DTE
TTFF	Time To First Fix	首次定位时间
U		
UART	Universal asynchronous receiver-transmitter	通用异步接收/发送器
UIM	User Identifier Management	用户身份管理
USB	Universal Serial Bus	通用串行总线

All Rights reserved, No Spreading abroad without Permission of ZTE

2 Interfaces

The MG2618 module connects externally through a 49 PIN stamp-hole interface.

2.1 PIN Description

Table 2–1 PIN Interface Definition

PIN	Type	Signal Definition	I/O	Description	Remark
1	GND	GND	--	--	--
2	POWER	RSSI_LED	O	Working status indicator	Active High
3	POWER	ON/OFF	I	Module power-on/off control	Valid at low level; pull-up internally, more information please refer to 4.1
4	GND	GND	--	--	--
5	AUDIO	HSED BIAS	O	MIC bias	Default is 1.9V
6	AUDIO	MIC1_P	I	Differential audio input channel 1, anode	--
7	AUDIO	MIC1_N	I	Differential audio input channel 1, cathode	--
8	AUDIO	MIC2_P	I	Single-end audio input channel 2	--
9	AUDIO	SPK2_P	O	Single-end audio output channel 2	--
10	AUDIO	SPK1_P	O	Differential audio output channel 1, anode	--
11	AUDIO	SPK1_N	O	Differential audio output channel 1, cathode	--
12	GND	GND	--	--	--
13	POWER	/RESET	I	Resetting signal	Active low
14	POWER	VREG_MSME1	O	2.8V output	Recommend to use this pin for pull-up when level matching
15	GND	GND	--	--	--
16	ANT	RF_ANT	I/O	GSM antenna interface	--
17	GND	GND	--	--	--

All Rights reserved, No Spreading abroad without Permission of ZTE

PIN	Type	Signal Definition	I/O	Description	Remark
18	GND	GND	--	--	--
19	POWER	VBAT	I	GSM Power supply	3.4V~4.2V
20	GND	GND	--	--	--
21	SIM	VREG_SIM	O	Power supply for SIM card.	1.8/3V
22	SIM	SIM_DATA	I/O	Data signal of SIM card	--
23	SIM	SIM_CLK	O	Clock signal of SIM card.	--
24	SIM	SIM_RST	O	Reset signal of SIM card.	--
25	UART	/RTS	O	Request to send	2.8V，active low
26	UART	/CTS	I	Clear to send	2.8V，active low
27	UART	TXD	O	Transmitting data to serial port	2.8V，active low
28	UART	RXD	I	Receiving data from serial port	2.8V，active low
29	NC	NC	--	--	--
30	GND	GND	--	--	--
31	UART	DCD	O	Carrier detection	2.8V，active low
32	UART	/DSR	O	Data is ready	2.8V，active low
33	UART	RI	O	Ring tone	2.8V，active low
34	UART	/DTR	I	Data terminal is ready	2.8V，active low
35	NC	NC	--	--	--
36	GND	GND	--	--	--
37	GND	GND	--	--	--
38	ANT	GPS_ANT	I	GPS antenna	Module without GPS function, this pin should not be connected.
39	GND	GND	--	--	--
40	POWER	VGPS_MAIN	I	GPS power supply	Voltage range: 2.8V~4.2V, recommended 3.3V Module without GPS function, this pin should not be connected.
41	ADC	ADCIN	I	ADC voltage detection	
42	GND	GND	--	--	--
43	USB	USB_DP	--	USB differential data (+)	Using USB and RI to download firmware, calibration and measurement. Not support data transmitting yet.
44	USB	USB_DM	--	USB differential data (-)	

All Rights reserved, No Spreading abroad without Permission of ZTE

PIN	Type	Signal Definition	I/O	Description	Remark
45	I2C	I2C_SCL	--	I2C serial clock	2.8V, Not supported currently
46	I2C	I2C_SDA	--	I2C serial data	2.8V, Not supported currently
47	GND	GND	--	--	--
48	BT	BT_ANT	I/O	Bluetooth antenna interface	Not supported currently
49	GND	GND	--	--	--

2.2 Antenna Interface

Regarding the antenna of module, proper measures should be taken to reduce the access loss of effective bands, and good shielding should be established between external antenna and RF connector. Besides, external RF cables should be kept far away from all interference sources such as high-speed digital signal or switch power supply.

According to mobile station standard, stationary wave ratio (SWR) of antenna should be between1.1 to 1.5, and input impedance is 50 ohm. Different environments may have different requirements on the antenna's gain. Generally, the larger in-band gain and smaller out-band gain, the better performance the antenna has. Isolation among ports must more than 30dB when multi-ports antenna is used. For example, between two different polarized ports on dual-polarized antenna, or two different frequency ports on dual-frequency antenna, or among four ports on dual-polarized dual-frequency antenna, the isolation should be more than 30dB.

RF_ANT, GPS_ANT (PIN16, PIN38) are respectively used as the input pin for GSM and GPS antenna. when using these pin pads as the antenna feed pins, customers need pay attention to the following:

(1)The feed connected to PIN38 or PIN 16 is 50ohm micro-strip or strip line. To approach the module, put π shape or Inverted-F shape matching network for later debugging.

(2)The RF wires must be kept away from the GND, and generally the distance should be 3 times of the width of RF wires.

(3)It's forbidden to put some interference sources such as DC to DC, WIFI module, SIM card around RF wires or RF port.

2.3 RF Performance of antenna interface

The RF performance of antenna interface is shown in Table 2-2:

Table 2–2 RF Performance of antenna interface

All Rights reserved, No Spreading abroad without Permission of ZTE

Band	Uplink Frequency Band (MS->BTS)	Downlink Frequency Band (BTS->MS)	Max. Transmitter Power(dBm)	Receiving sensitivity(Typical)
GSM850	824MHz-849MHz	869MHz-894MHz	33±2 dBm	-108dBm
EGSM900	880MHz-915MHz	925MHz-960MHz	33±2 dBm	-108dBm
DCS1800	1710MHz-1785MHz	1805MHz-1880MHz	30±2 dBm	-106dBm
PCS1900	1850MHz-1910MHz	1930MHz-1990MHz	30±2 dBm	-106dBm

All Rights reserved, No Spreading abroad without Permission of ZTE

3 Electric Features

This chapter mainly describes the module's electrical characteristics, including the level, power consumption, reliability of module's interfaces.

3.1 Interface Power Level

Table 3–1 Power Level Range of Digital Signal

Interface	High/Low level	Min.	Typ.	Max.	Remark
UART	0	0	0	0.3* UART1	
	2.8V	0.7* UART1	2.8V	1.1*UART1	
SIM	0	0	0	0.3*VREG_SIM	
	1.8V/3.0V	0.7*VREG_SIM	VREG_SIM	1.1*VREG_SIM	

The high power level of UART1 is 2.8V, VREG_SIM is 1.8V/3V(automatic adaptation).

3.2 Power Consumption

Table 3–2 Power Consumption of Module (Typical)

Test Items	Test condition(Test duration 1min)		Test result			Unit
	GSM	GPS	Max.	Min.	Average	
Standby/sleep current	Standby	The kernel is running, but not working properly	47.46	30.32	31.16	mA
	Standby	ON	69.19	44.45	46.35	mA
	Standby	OFF	39.45	21.96	22.87	mA
	Sleep	ON	75.2	23.68	27.2	mA
	Sleep	OFF	28.55	0.93	2.45	mA
Working current	Turn on the module, GSP kernel is running, not sleep or work		123.44	54.27	72.55	mA
Network lock current	PGSM，62，PCL5		239.4	174.68	242.68	mA

All Rights reserved, No Spreading abroad without Permission of ZTE

(Instrument Network, GPS sleep)	PGSM，62，PCL10	157.13	120.65	145.4	mA
	PGSM，62，PCL19	94.41	32.71	82.01	mA
	DCS，698，PCL0	195.42	147.47	180.7	mA
	DCS，698，PCL5	146.32	113.48	135.2	mA
	DCS，698，PCL15	87.68	70.53	79.08	mA

Note: As the GPS can't work independently, when the module sleep in the condition of GPS working, in fact , the module is in the state of part dormant, and the part related to GPS is still working.

3.3 Power-on/off timing sequence

The timing sequence of module shows entire process of power-on/off.

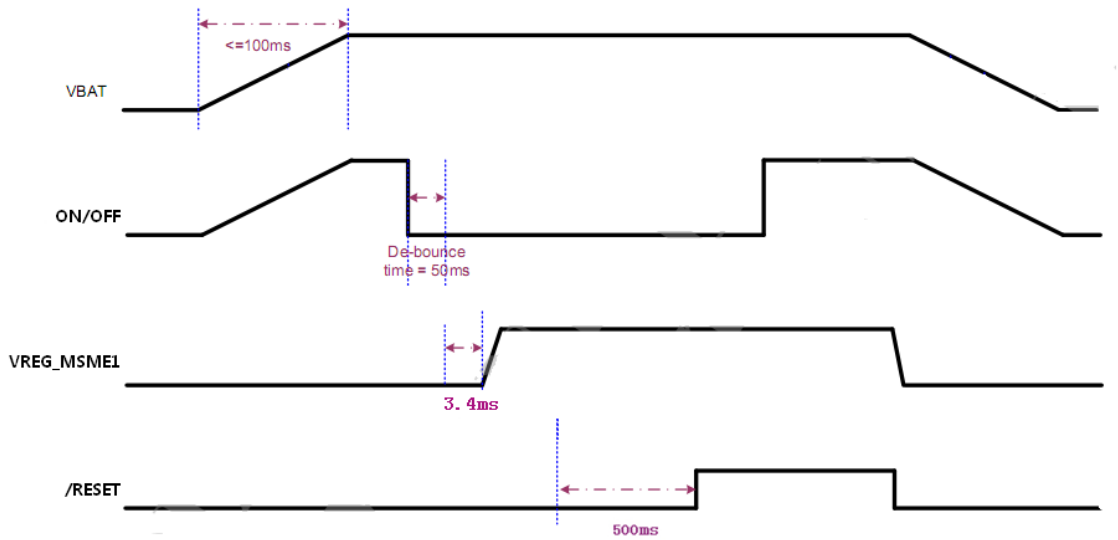

Figure 3–1 Power-on/off timing sequence

3.4 Reliability Test

The reliability test of module includes the items as follows: High/low temperature operation, high/low temperature storage, thermal shock, alternating temperature humidity, etc. The test results must conform to the industrial requirements. Module testing environment of temperature is shown as the Table below.

Table 3–3 Module testing environment of temperature

All Rights reserved, No Spreading abroad without Permission of ZTE

Parameter	Working Condition	Min	Max	Remark
To	Operation temperature	-35℃	+75℃	
Ta	Limited temperature	-40℃	+85℃	
Ts	Storage temperature	-50℃	+90℃	

3.5 ESD Characteristic

The measured ESD values of module at the normal temperature are shown as the following table.

Table 3–4 ESD Endurance

Interface	Test program	Test requirements
Antenna Interface	Air discharge	±8 kV
	Contact discharge	±8 kV
SIM Interface	Air discharge	±8 kV
	Contact discharge	±6 kV

3.6 GPS Performance

Table 3–5 GPS Performance

Test Items	Working mode	Typical
CNR @130dBm	--	40
Sensitivity(dBm)	Tracking	-162
	Cold start	-145.5
	Warm start	-159.5
TTFF @-130 dBm(Sec.)	Cold start	34.1
	Warm start	32.7
	Hot start	0.8

Note: The test result belongs to the modules which support GPS function.

All Rights reserved, No Spreading abroad without Permission of ZTE

4 Reference Circuit of Module Interfaces

The chapter provides the precautions and reference design on the interface circuit according to the module's functions.

4.1 Reset and Power Designing

- Power Designing

VBAT is the power supply pin of module. See the module's required voltage characteristics in Table 4-1:

Table 4–1 Working Condition

Type	Vmin	Typical	Vmax
Input Voltage	3.4V	3.8 V	4.2 V
Input Current	< 3mA (average)	--	2A(Depending on the condition of the network signal)

- Power-on

The module is under power-off status after it's normally connect to the power supply. To turn on the module, provide a low level voltage more than 2.5s to the ON/OFF PIN. The power-on time of module is related to module status, it's usually required low level for more than 2.5S.

- Power-off

To turn off the module, provide a 3s low level pulse to the ON/OFF PIN.

- Reset

If the external reset function has to be used, provide a low level pulse lasting 100ms to the /RESET PIN to reset the module. After resetting, the module will enter power-off state, and you need to provide a low level voltage lasting 2.5s to the ON/OFF pin to power-on the module. When resetting the module, if the power level of ON/OFF pin in the state of low level, the module will restart automatically.

Reference circuit of power supply and reset interface are shown as Figures below.

Select appropriate parameters according to the actual selected power supply since VD1 is TVS tube, and select CJ2305 from Changjiang Electronics or DMP2305U-7 from DIODES since VT1 is MOS tube. Refer to figure 4-2 for the design of power circuit. Select MIC29302 and adjust the output voltage through

All Rights reserved, No Spreading abroad without Permission of ZTE

the adjustment of R5 and R6. Please refer to MIC29302's specification for detailed parameters design. Please note that the components in the figure are just for your reference. For details, please adjust according to the actual circuit.

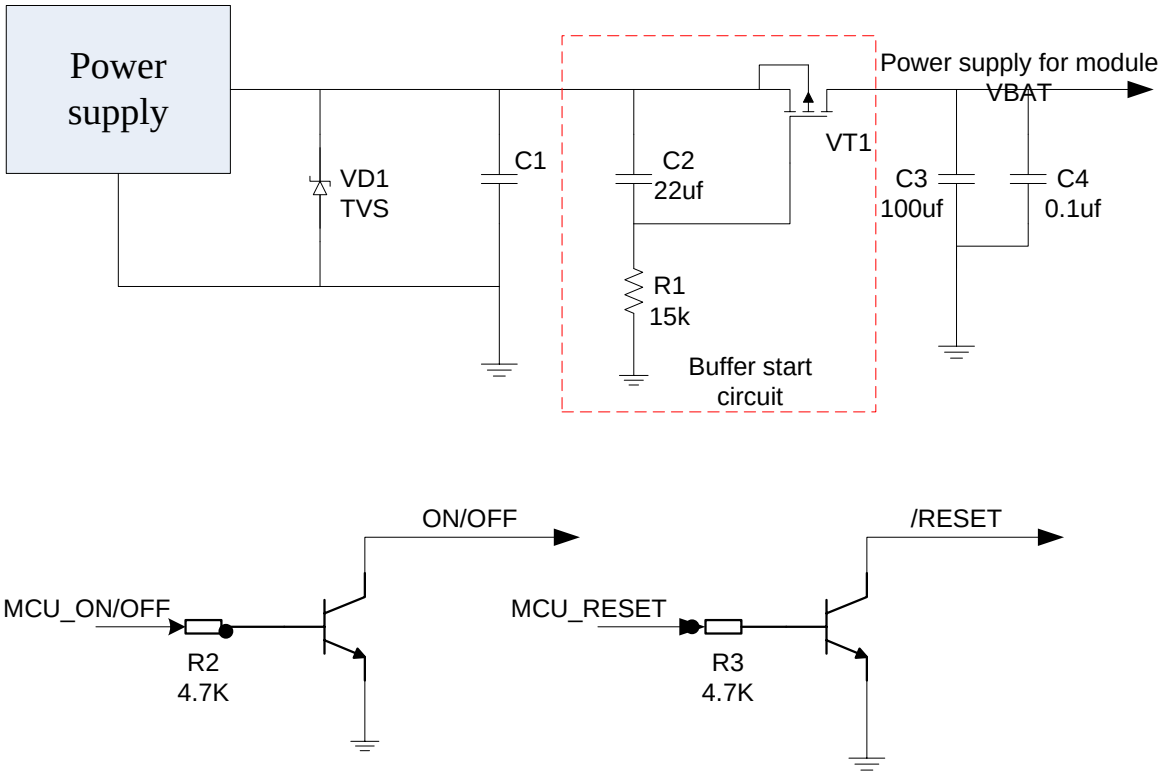

Figure 4–1 Reference Circuit of Power Supply & Reset Interface

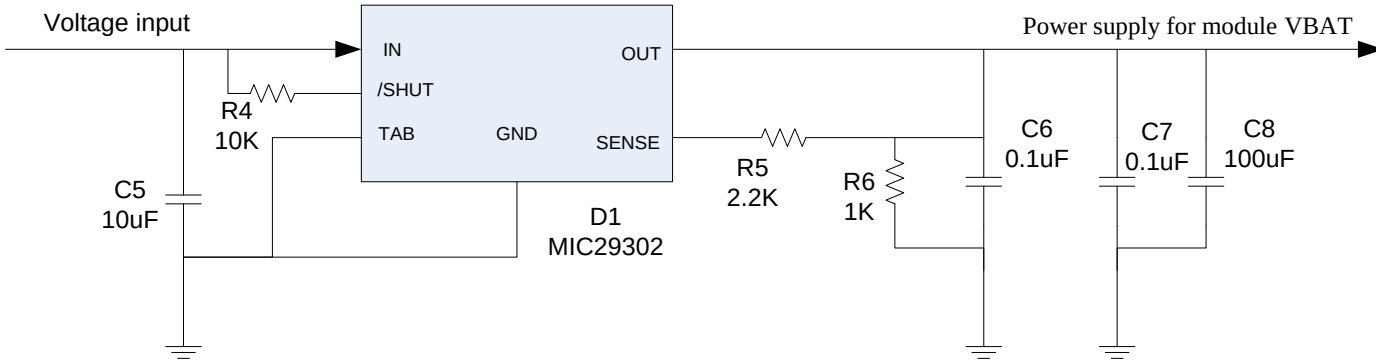

Figure 4–2 Reference Circuit of Power Supply Interface

- VREG_MSME1

All Rights reserved, No Spreading abroad without Permission of ZTE

The voltage output is available only when the module is on. The normal output voltage is 2.8V, and users should absorb the current from this pin as little as possible (less than 10mA). Generally, it is recommended to use this pin to pull up the chipset PIN as the requirements of level matching. Therefore, it's not recommended to use this pin for other control purposes.

- **Other Advice**

In order to make sure the data is saved safely, please do not cut off the power when the module is on. It's strongly recommended to use ON/OFF pin or AT command to turn off the module.

4.2 UART Interface

The module provides an integrated full duplex UART interface. The typical baud rate is 115.2Kbps and the max. rate is 921.6kbps.

Note:

1)The duplex UART interface could be used as serial interface for AT commands, data service, and the default baud rate is adaptive.

2)The module's UART output I/O level is 2.8V, therefore it needs level conversion when connecting with 3.3V or 5V logic circuit. Otherwise, it would be damaged or unstable by the mismatch of power level

For example, if MCU communication with module through UART interface, and the MCU UART level is 3.3V. the most common method is to use a dynatron to realize the level conversion. Figures below show the level conversion to 3.3V through the UART interface of module. The resistance and capacitance in figure 4-4 are just for reference, and they need to be recalculated during the design. The diode in this Figure is Schottky diode (forward voltage drop is 0.3V). If you select other diodes, please select one with lower forward voltage drop to make sure RXD_2V8 is below the threshold when inputting low level.

Recommended level converter :NLSX5014MUTAG//TXB0304RUTR；

Recommended Transistor: MMBT3904LT1G//LMBT3904LT1G//PMBT3904；

Recommended Diode: LRB521S-30T1G//RB521SM-30T2R//RB521S-30//1PS79SB10//

RB521S-30U9JTE61

All Rights reserved, No Spreading abroad without Permission of ZTE

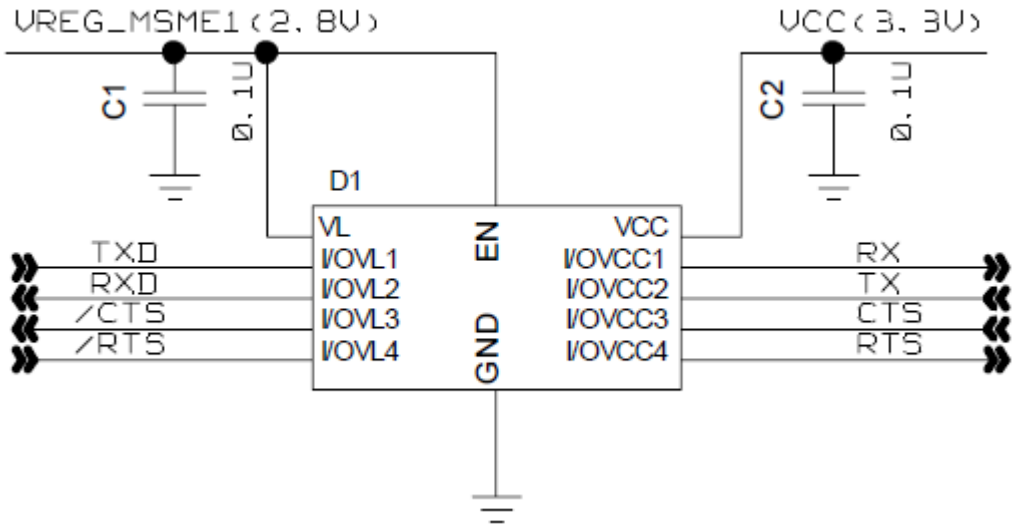

Figure 4–3 Reference Circuit 1 of UART Interface

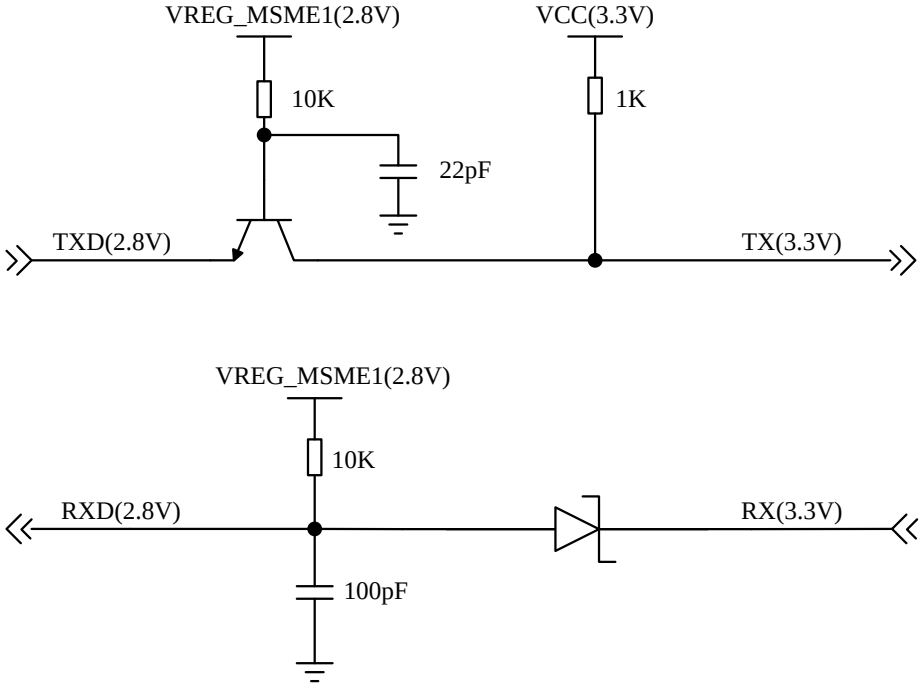

Figure 4–4 Reference Circuit 2 of UART Interface

3)When the module need to enter sleep mode, pull up the pin /DTR to high level, and when you want to wake up the module, pull down the /DRT pin to low level.

4)When there is a call, a low level is output from PIN RI, and lasting until the end of conversation.

All Rights reserved, No Spreading abroad without Permission of ZTE

4.2.1 Duplex UART Interface

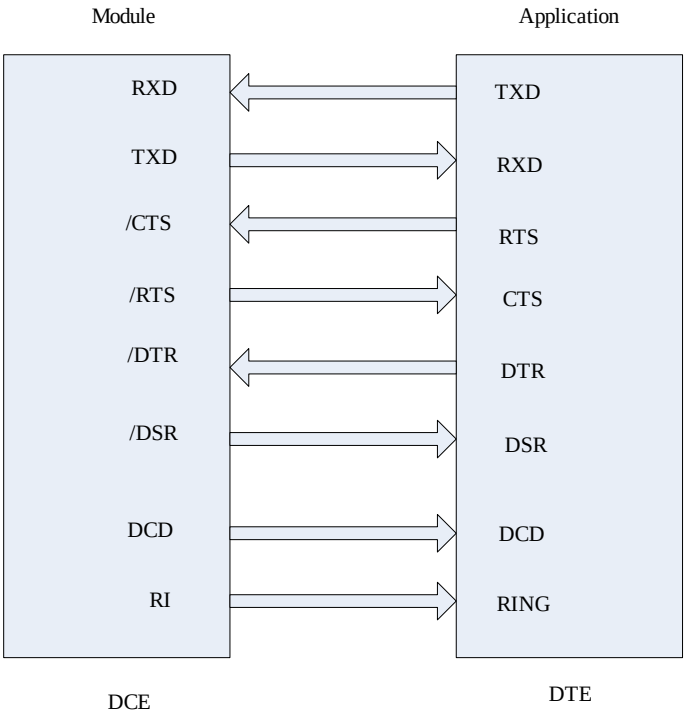

Figure 4–5 UART Connection between DCE－DTE

The UART interface definition is shown in Table below:

Table 4–2 UART Interface Definition

Function	PIN	Definition	I/O	Description	Remark
UART	25	/RTS	O	Ready to send	DTE informs DCE to send
	26	/CTS	I	Clear to send	DCE has switched to Rx. mode
	27	TXD	O	Transmitting data	DTE receives serial data
	28	RXD	I	Receiving data	DTE transmits serial data
	31	DCD	O	Carrier detection	Data link connected
	32	/DSR	O	Data set ready	DCE is ready
	33	RI	O	Ringtone indication	Inform DTE upon a remote call
	34	/DTR	I	Data terminal ready	DTE is ready

All Rights reserved, No Spreading abroad without Permission of ZTE

4.3 SIM Card Interface

Module supports two kinds of SIM card of 1.8V and 3V. The following Figure shows the reference design of the SIM card. On the line close to the SIM card console, be sure to add the ESD circuit protection during the design.

Table 4–3 Definition of SIM Card Signal

PIN	Function	Definition	I/O	Description	Remark
21	SIM	VREG_SIM	O	SIM card power, output from the module	1.8/3V
22	SIM	SIM_DATA	I/O	SIM card DATA signal	--
23	SIM	SIM_CLK	O	SIM card clock signal	--
24	SIM	SIM_RST	O	SIM card reset signal	--

The typical rate of SIM card interface is about 3.25MHz. It is recommended to place SIM card console close to the SIM card interface to prevent the wiring from being too long(less than 100mm), which might seriously distort the waveform and thus affect the signal integrity

The distance between the module and headset/handset should be as short as possible and it's enveloped by the ground wires to avoid strong interference sources.

It is recommended to make the grounding protection for SIM_CLK and SIM_DATA signal wiring. Cascade one 1uF capacitor between VREG_SIM and GND, another 0.1uF and 33pF capacitor can be added between VREG_UIM and GND. In order to filter out the antenna's interference signal, add three 33pF capacitors between SIM_CLK, SIM_DATA, SIM_RST and GND.

It is recommended to take electrostatic discharge (ESD) protection measures near the SIM card socket. The TVS diode junction capacitance less than 10 pF must be placed as close as possible to the SIM socket, and the Ground pin of the ESD protection component is well connected to the Ground. The recommended model is: CESDLC3V0L4//NZQA5V6AXV5T1G//PESD3V3V4UW. The reference circuit of SIM card interface is as shown in Figure below.

All Rights reserved, No Spreading abroad without Permission of ZTE

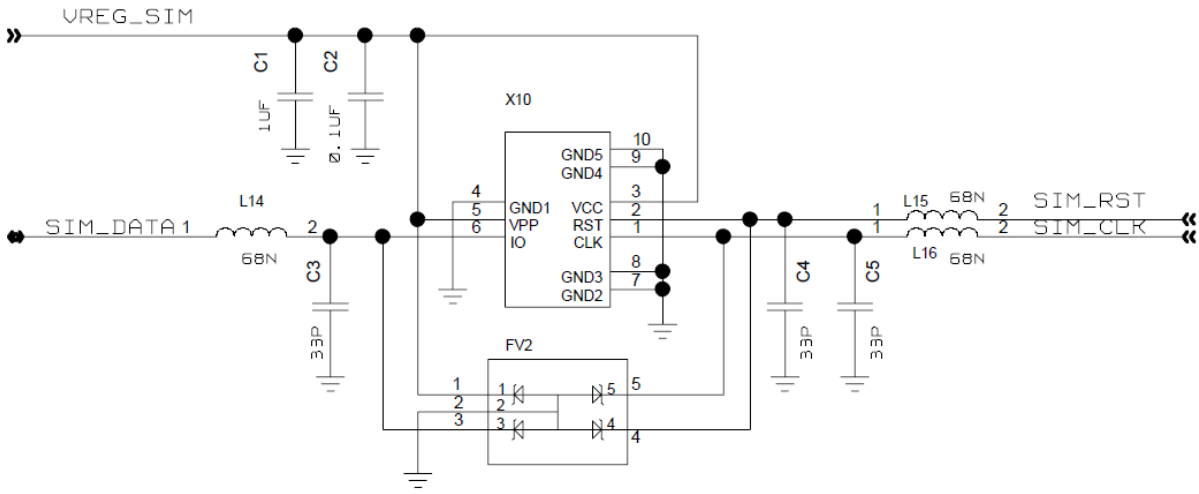

Figure 4–6 Reference Circuit of SIM Card Interface

Note:

The distance between the module and SIM card console should be as short as possible, and it is recommended to place SIM card console and ESD circuit close to the SIM card interface.

4.4 Audio Interface

The module provides 2 Speaker interfaces and 2 Microphone interfaces. Only one pair I/O works at the same time.

Table 4–4 Audio interface definition

Function	PIN	Definition	I/O	Description	Remark
AUDIO	7	MIC1_N	I	Differential audio input channel 1, cathode	Differential input
	6	MIC1_P	I	Differential audio input channel 1, anode	
	11	SPK1_N	O	Differential audio output channel 1, cathode	Differential output
	10	SPK1_P	O	Differential audio output channel 1, anode	
	8	MIC2_P	I	Single-end audio input channel 2	Single-end input
	9	SPK2_P	O	Single-end audio output channel 2	Single-end output
	5	HSED BIAS	O	MIC bias	Default: 1.8V

All Rights reserved, No Spreading abroad without Permission of ZTE

See the audio reference circuit in Figure below.

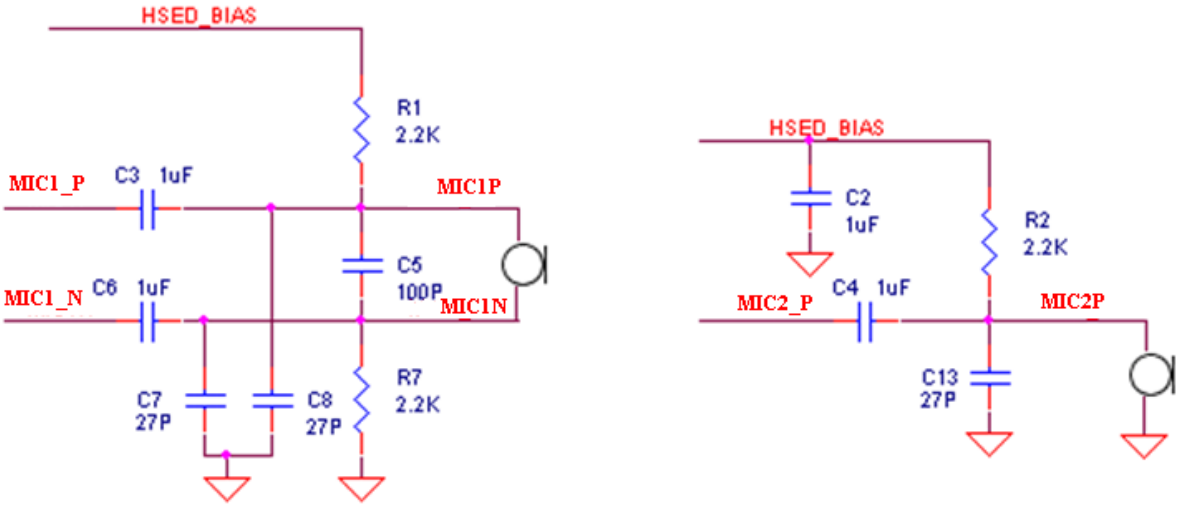

Figure 4–7 MIC reference circuit

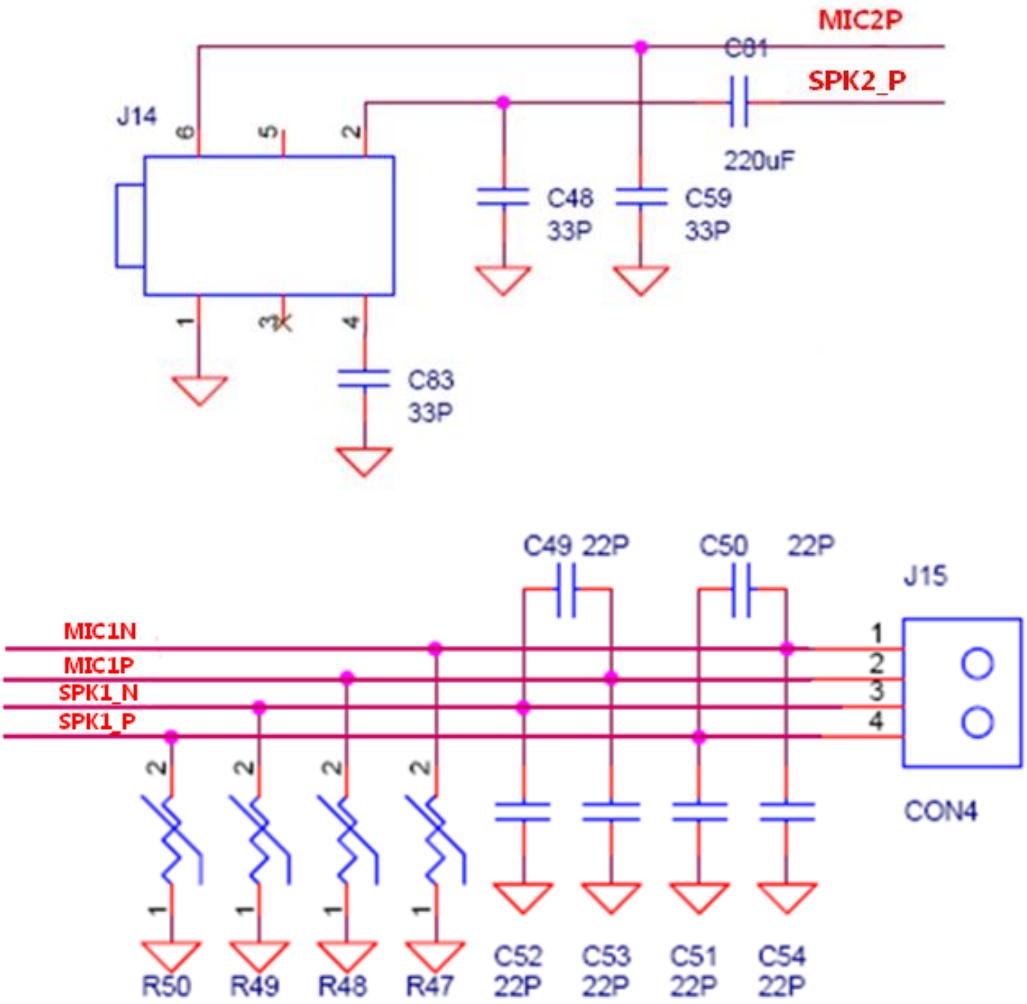

All Rights reserved, No Spreading abroad without Permission of ZTE

Figure 4–8 SPK reference circuit

- **Microphone**

The MIC1_N & MIC1_P are both differential interfaces, and they can also be used for single-ended input. It's recommended to use differential method to reduce the noises. The MIC2_P interface is used for single-ended input. Directly connect to the microphone since these two inputs are internally provide 1.9V bias voltage.

- **Speaker**

The SPK1_P & SPK1_N are both differential interfaces with 32 ohm impedance, while the SPK2_P is single-ended interface with 32 ohm impedance. There is no coupling capacitor internally, you need to add it in the designing process.

- **Design of audio interface on the receiver**

The output power of SPK1 is 35mW. Select the microphone with the sensitivity lower than -51.5dB since and the max. gain inside MIC1 can reach 51.5dB. The voltage level of MIC1_P is about 1.9V.

NOTE:

If other kind of audio input method is adopted, the input signal should be within 0.5V. If the signal voltage is lower than this value, then the pre-amplifier should be added. If the signal voltage is higher than this value, then attenuation network should be added

---

- **Design of audio interface on the earpiece**

The output power of SPK2 is 10.8 mW.Select the microphone with the sensitivity lower than -51.5dB since and the max. gain inside MIC2 reaches 51.5dB. The voltage level of MIC2_P is about 1.9V.

Note: In order to achieve well audio effects, it's recommended that:

1) During the process of using module, it's advised to use 100pf & 33pf capacitance on its external audio path, and serially connect with the beads to improve the audio quality.

2) Connect TVS tube or pressure sensitive resistance on the audio path (approaching the module's interface) to prevent the ESD from damaging the module.

3) Make sure the use environment and module are well grounded and there is no mutual influence.

4) The power ripple supplied to the module is less than 50mV.

All Rights reserved, No Spreading abroad without Permission of ZTE

4.5 LED indicator interface

RSSI_LED is pull-down internally, it need to add transistor to drive.

Table 4–5 Definition of LED Indicator Status

Module status	LED status	Frequency
Power on state	the LED is off	
Network searching state	the LED blinks at 3Hz	3Hz
Idle/sleep state	the LED blinks at 1Hz	1Hz
Traffic state (call, data):	the LED blinks at 5Hz	5Hz

The output status of RSSI_LED pin is decided by the software of module, and it's the GPIO pin, the driver ability is limit. It can't drive the LED directly, and it need to work with transistor. The figure below is the reference of circuit.

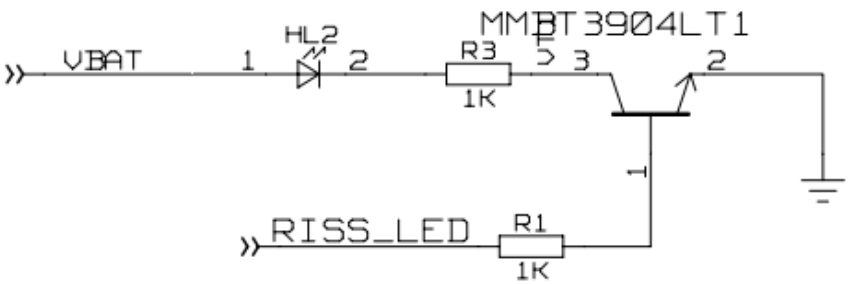

Figure 4–9 Reference Circuit of Status Indicator

4.6 GPS Interface

(This chapter can be only applied by the modules support GPS function)

All Rights reserved, No Spreading abroad without Permission of ZTE

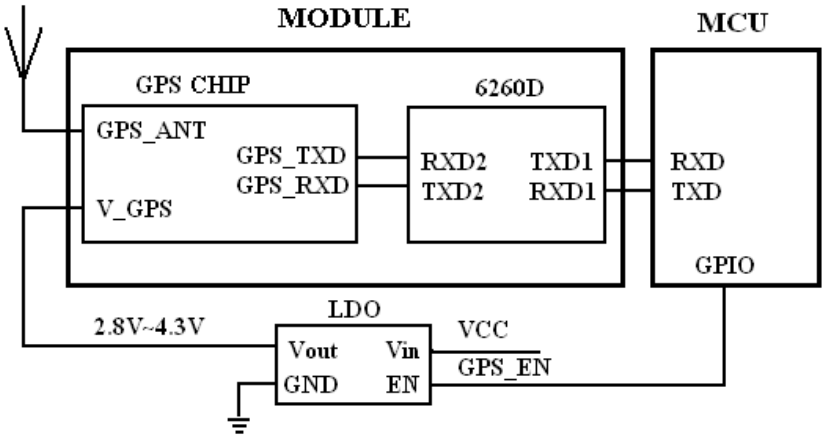

Figure 4–10 Reference Circuit of GPS Interface

It's recommended to connect with GPS RF socket through a 50Ω RF cable. The good matching between antenna and module enables GPS to obtain better receiving sensitivity. V_GPS works as the PIN to supply 2.8-4.3V power to GPS(recommended: 3.3V);

LDO can be the power supply of GPS, and the GPIO of MCU can be used as the external enable/disable control for the LDO. In the figure above, name the MCU control signal of LDO as GPS_EN, which connected with MCU to control the power supply for GPS. The GPS chip can't work independently, and it need to work with the GSM module together to output the valid location information. The GPS data output from UART interface.

4.7 Connection Method of GPS Active Antenna

(This chapter can be only applied by the modules support GPS function)

In the figure below, V_G_ANT works as the power supply of GPS active antenna. Set V_G_ANT voltage according to the requirements of selected GPS active antenna, connect M_GPS_RF to GPS_ANT, and connect GPS_RFIN to GPS active antenna. The resistance of RF cable in the figure is 50Ω.

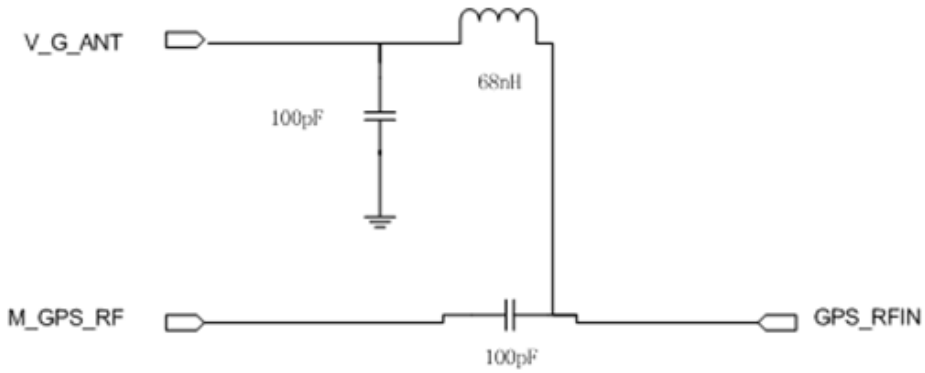

Figure 4–11 Active GPS antenna circuit reference design principle diagram

All Rights reserved, No Spreading abroad without Permission of ZTE

5 Mechanic Features

5.1 Appearance diagram

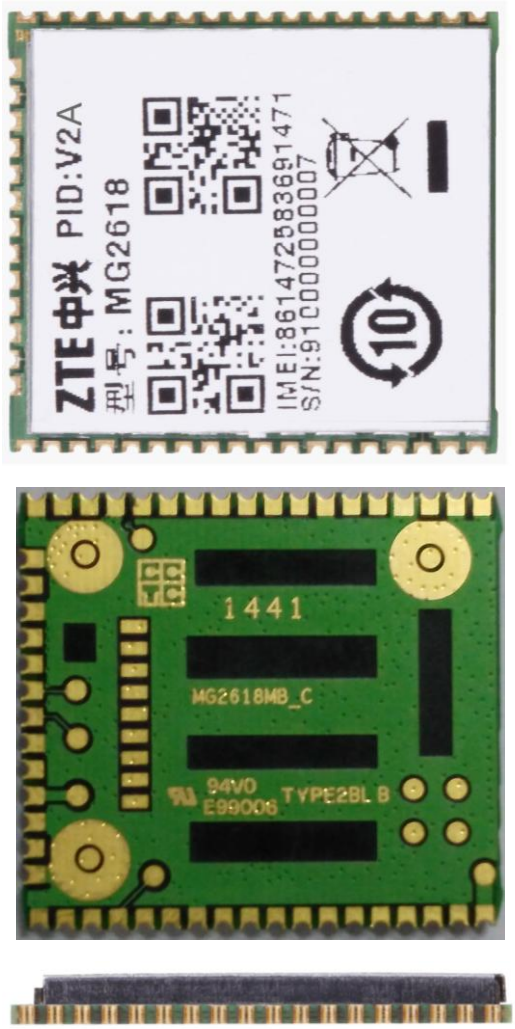

Figure 5–1 Top & bottom & side view of module

(Note: The figure above is just for reference, please take the actual products as the reference)

All Rights reserved, No Spreading abroad without Permission of ZTE

5.2 Assembly Diagram

See the assembly diagram of module in Figure below (Unit: mm):

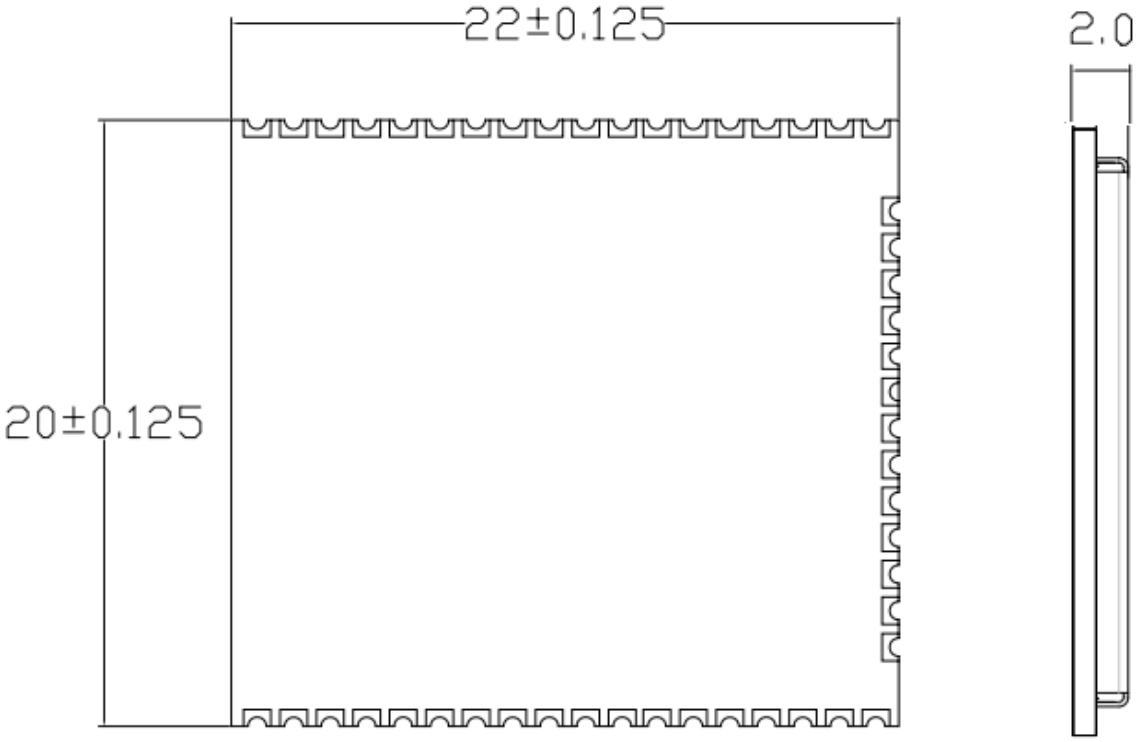

Figure 5–2 The assembly diagram of module

- **Dimensions**(Length×Width×Thickness): 22.00mm×20.00mm×2.0mm
- **Weight**: About 1.9g

All Rights reserved, No Spreading abroad without Permission of ZTE

5.3 PCB Package Dimensions

The PCB package dimensions of module are shown in Figure below (Unit: mm):

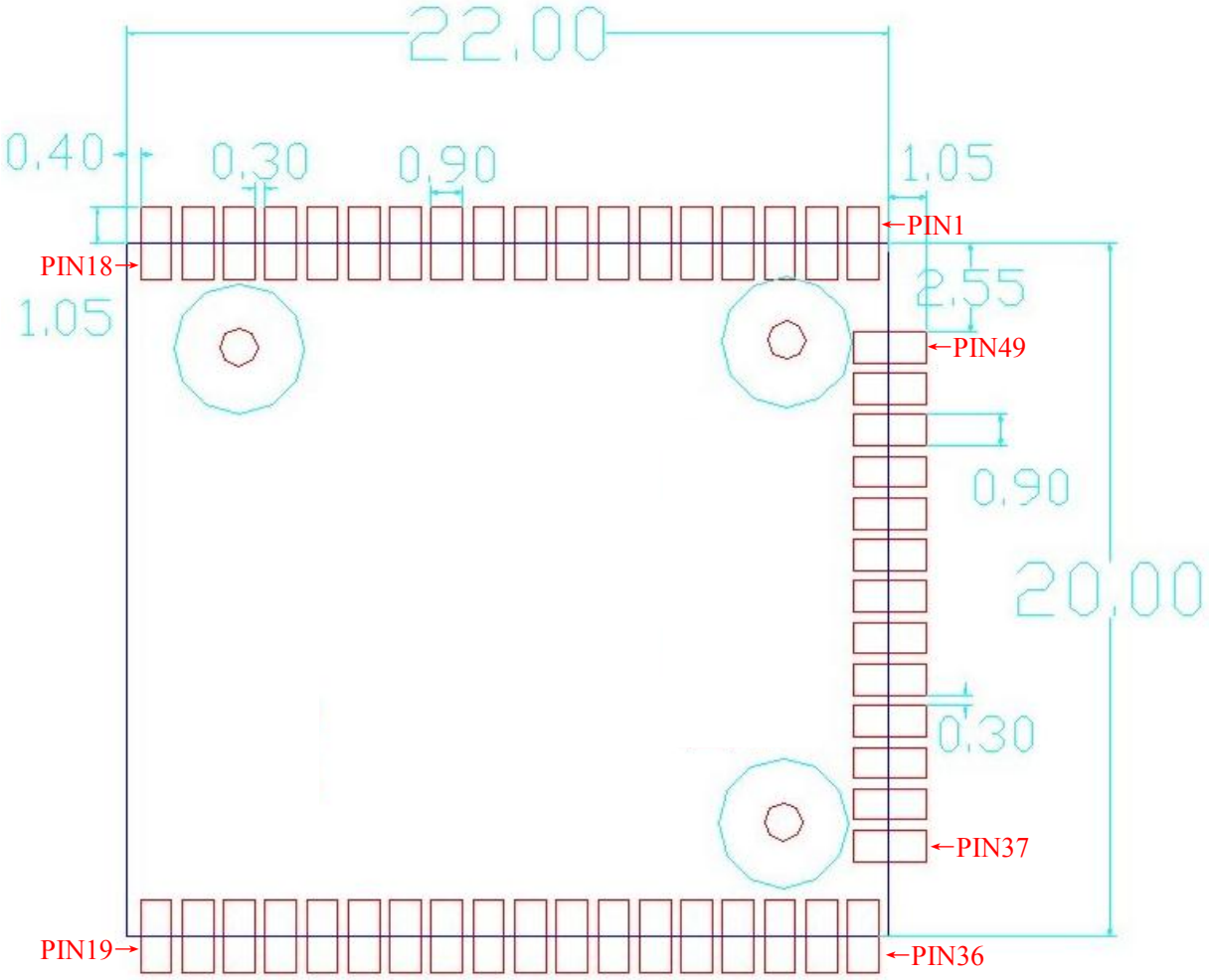

Figure 5–3 The PCB package dimensions of module (Top View)

All Rights reserved, No Spreading abroad without Permission of ZTE

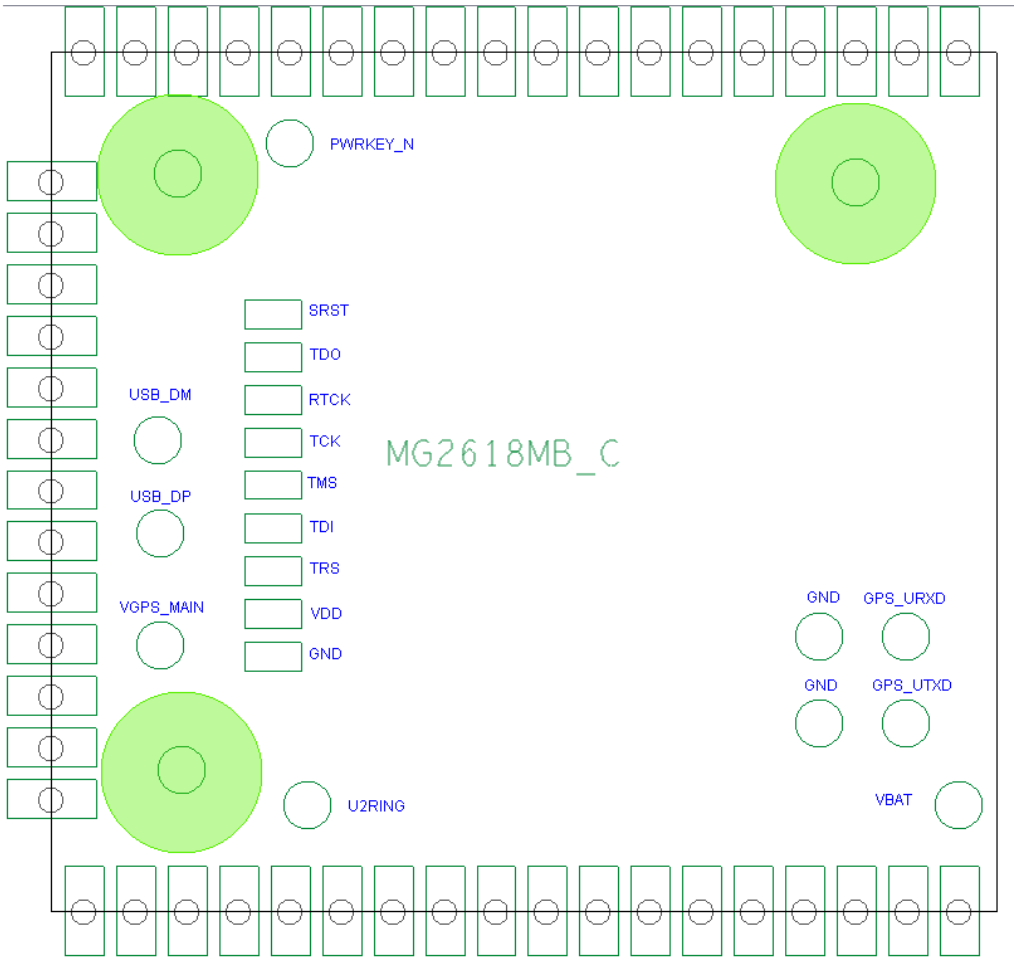

Figure 5–4 Test point of module

Precaution during PCB designing:

1） Copper-clad and wiring are forbidden in the nearby areas of the RF stamp-hole.

2） For the convenience of testing and maintenance, it is recommended to drill holes on the PCB to expose JTAG test points.

All Rights reserved, No Spreading abroad without Permission of ZTE

6 SMT Process and Baking Guide

This chapter describes module's storage, PAD design, SMT process parameters, baking requirements, etc., and it is applicable for the process guide to second-level assembly of LCC encapsulation module.

6.1 Storage Requirements

Storage conditions: temperature<40℃, relative humidity<90% (RH), 12 months weldability guaranteed under this circumstances of excellent sealing package.

The Moisture sensitivity level for all modules is level 3 (Conforming to IPC/JEDEC J-STD-020). After opening the package, mount within 168 hours under the environment conditions of temperature<30℃, relative humidity<60% (RH); if it doesn't meet the above requirements, perform the baking process. See the baking parameters in Table below:

Table 6–1 Baking parameters

Temperature	Baking conditions	Baking time	Remarks
125±5℃	Moisture≤60%RH	8 hours	The accumulated baking time must be less than 96 hours
45±5℃	Moisture≤5%RH	192 hours	

The product's transportation, storage and processing must conform to IPC/JEDEC J-STD-033

When in the process of PAD designing of module, refer to IPC-SM-782A and the chapter 6.2 below.

6.2 Recommended PAD Design

When designing the pad of main board, the following dimensions marked in the Figure below should be taken into consideration.

ZTE Confidential

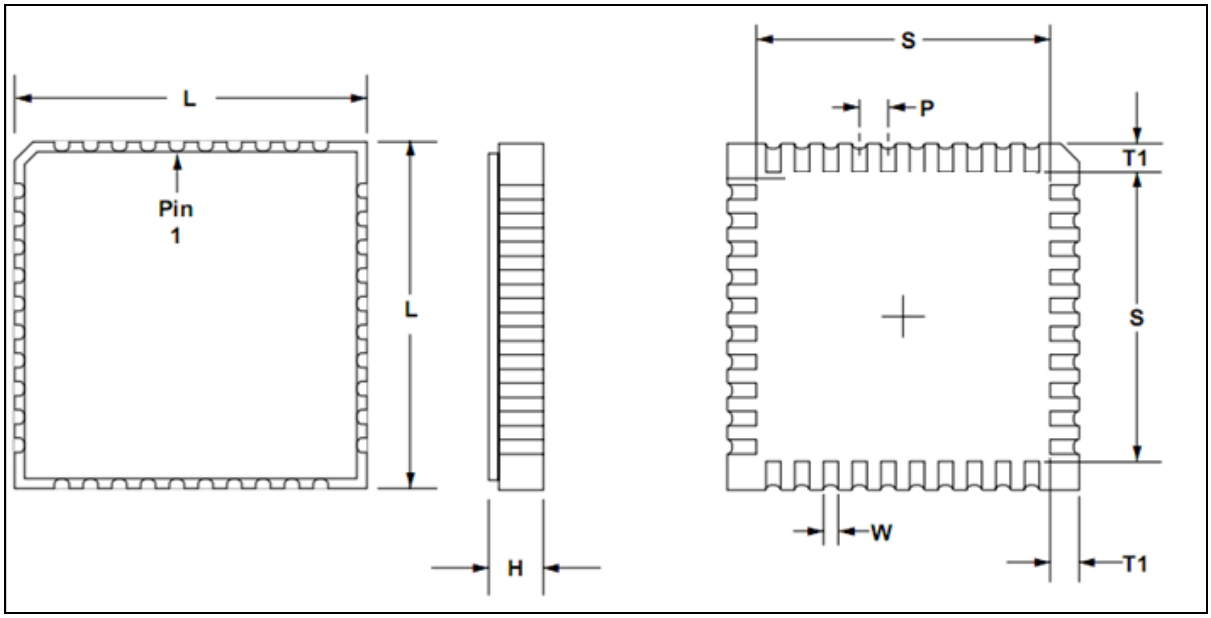

Figure 6–1 Module's dimensions

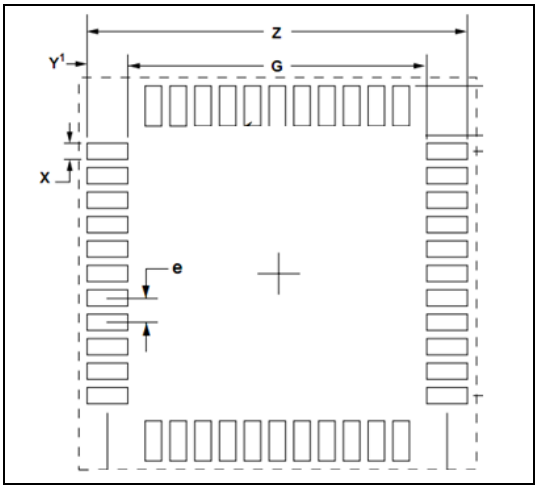

Figure 6–2 Recommended PAD dimensions on corresponding main board

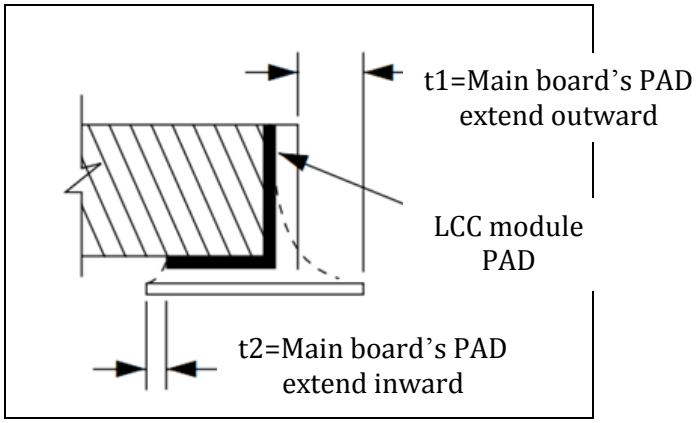

All Rights reserved, No Spreading abroad without Permission of ZTE

Figure 6–3 Module board's PAD mounted on main board

Refer to the recommended PAD dimensions of main board at client end in the table below:

Table 6–2 Recommended PAD dimensions of main board

Limited conditions of module board's dimensions	Main board's recommended PAD dimensions						
	Y1=T1+t1+t2			X	Z	G	e
	/	t1	t2				
When H<1mm, P-W<0.5mm	T1	H/2	0.05mm	W	L+2*t1	S-2*t2	P
When H<1mm P-W≥0.5mm		H/2	0.05mm	W(min) (W+0.2mm)(max)	L+2*t1	S-2*t2	P
When H≥1mm,and P-W<0.5mm		0.5mm	0.05mm(min) 0.1mm(max)	W	L+2*t1	S-2*t2	P
When H≥1mm,and P-W≥0.5mm		0.5mm	0.05mm(min) 0.1mm(max)	W(min) (W+0.2mm)(max)	L+2*t1	S-2*t2	P

6.3 Requirements of Module's Position on Main board

It is recommended that the thickness of green oil at the module's position on main board should be less than 0.02mm. Do not cover with white oil or cover white oil on the green oil layer to avoid excessive thickness. As the excessive thickness may cause the module cannot be effective contact with the solder paste thus affecting the quality of welding.

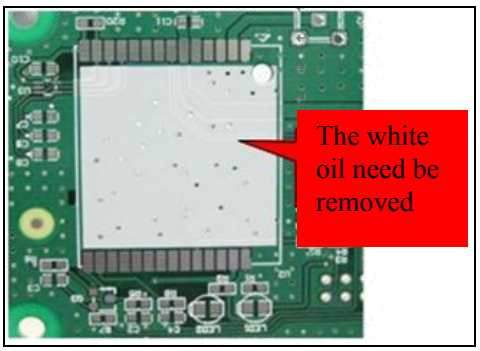

Figure 6–4 Green oil and white oil at module's position on main board

(The figure is just for reference; it doesn't represent the actual module encapsulation)

In addition, do not lay out other components within 2mm around the module's position on main board to ensure the maintenance of the module.

All Rights reserved, No Spreading abroad without Permission of ZTE

6.4 Module Planeness Standard

The module's planeness is required to be 0.15mm. Measurement method: put the module on the marble plane, use the feeler gage to measure the gap width at the position of maximum warp, and do not exert force on the module during the measurement.

6.5 Process Routing Selection

The modules are manufactured with the lead-free process and meet the ROHS requirements, therefore it's recommended to follow the lead-free manufacturing process upon the selection of process routing for module board and main board.

6.5.1 Solder Paste Selection

The solder pastes with metal particle TYPE3 and TYPE4 can fulfill the welding requirements. It is accordingly recommended to use the no-clean solder paste. If the solder paste which needs cleaning is used, we cannot guarantee the components on the module board could withstand the washing of the cleaning solvents. This might cause the functional problems of such components and affect the appearance of the module. During the printing process, make sure the solder paste's thickness at the position of module's PAD is within 0.18mm -0.20mm.

6.5.2 Design of module PAD's steel mesh opening on main board

The thickness of the steel mesh on main board is selected according to the encapsulation type of components on the main board. Pay attention to the following requirements:

1） Make sure to design the module PAD on main board according to section 2.1.

2） The thickness of steel mesh is 0.15mm or 0.18mm, but the thickness at the position of module pad can be increased to 0.18~0.20mm or the thickness of steel mesh is directly 0.18mm~0.20mm on main board.

3） Requirements on the thickness of solder paste: control the thickness between 0.18mm and 0.20mm.

4） See the LCC module PAD's steel mesh opening in the following table:

Table 6–3 LCC module PAD's steel mesh opening

All Rights reserved, No Spreading abroad without Permission of ZTE

Module PAD GAP (G)=Center Distance (e) －PAD width (X)		Steel mesh opening	
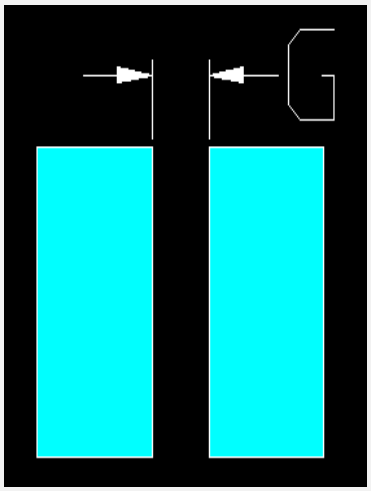	G≥0.5mm	Drill holes at 100% scale in the direction of width; extend 0.3mm outward in the direction of length	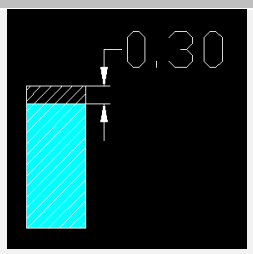
	G＜0.5mm	Contract 0.05~0.1mm in the direction of width; Contract 0.05~0.1mm inward in the direction of length, extend 0.5mm outward in the direction of length.	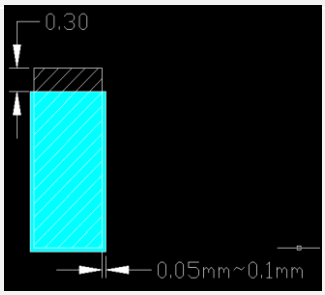

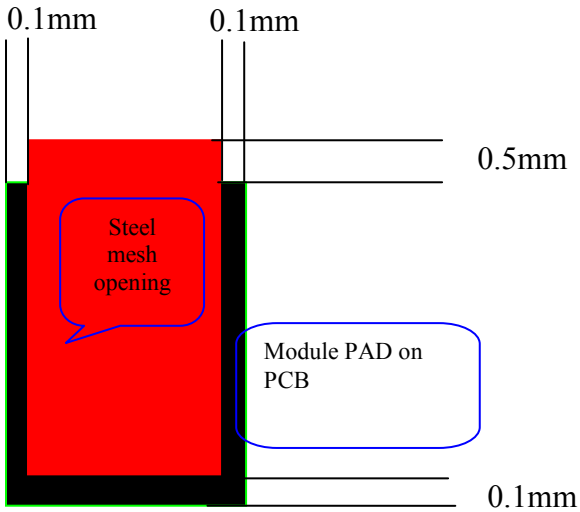

Figure 6–5 Module Board's Steel Mesh Diagram

6.5.3 Module Board's SMT process

1) **SMT Pallets:**

The pallets, which are suitable for SMT, have been made for most ZTE modules. If the module has provided the pallets itself and meets the SMT requirements, customers can directly use it for module SMT.

All Rights reserved, No Spreading abroad without Permission of ZTE

Figure 6–6 Material Module Pallet

(The figure is just for reference; it doesn't represent the actual Material Module Pallet)

Otherwise, customers need make a loading tool similar to the pallet. Customers can take out the module from the packaging box, put them into the pallet according to the sequence and direction, and then start SMT.

2） **Mounting Pressure:**

In order to ensure a good contact between the module and the solder paste on main board, the pressure of placing the module board on main board should be 2-5N according to our experiences. Different modules have different numbers of pads, therefore the pressure selected are different. Customers can select proper pressure based on their own situations to suppress the module paste as little as possible, in order to avoid the surface tension of the solder paste melts too much to drag the module during reflow.

6.5.4 Module Soldering Reflow Curve

Module soldering furnace temperature curve is:

Peak value: 245+0/-5℃

≥217℃: 30～～60S

150～200℃: 60～～120S

Temperature rise slope: <3℃/S

Temperature drop rate: －2～－4℃/S

All Rights reserved, No Spreading abroad without Permission of ZTE

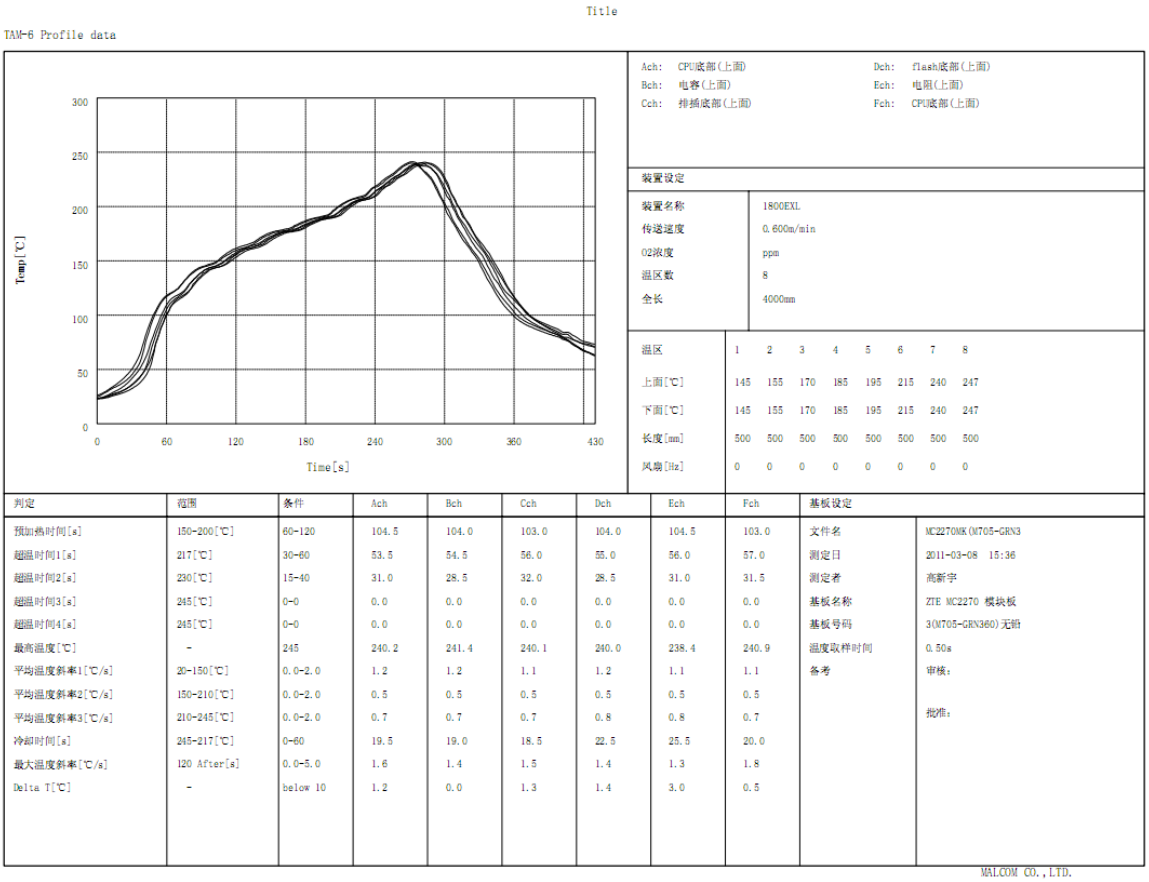

Figure 6–7 Module Furnace Temperature Curve Diagram

Note: The test board of furnace temperature must be the main board with the module board mounted on, and there must be testing points at the position of module board.

6.5.5 Reflow method

If the main board used by customers is a double-sided board, it is recommended to mount the module board at the second time. In addition, it is preferable for the main board to reflow on the mesh belt when mounting at the first time and the second time. If such failure is caused by any special reason, the fixture should be also used to make such main board reflow on the track so as to avoid the deformation of PCB during the reflow process.

6.5.6 Maintenance of defects

If poor welding occurs to the module board and main board, e.g., pseudo soldering of the module board and main board, the welder can directly use the soldering iron to repair welding according to the factory's normal welding parameters.

All Rights reserved, No Spreading abroad without Permission of ZTE

6.6 Module's Baking Requirements

The module must be baked prior to the second reflow.

6.6.1 Module's Baking Environment

The operators must wear dust-free finger cots and anti-static wrist strap under the lead-free and good static-resistant environment. Refer to the following environment requirements:

The product's transportation, storage and processing must conform to IPC/JEDEC J-STD-033.

6.6.2 Baking device and operation procedure

Baking device: any oven where the temperature can rise up to 125°C or above.

Precautions regarding baking: during the baking process, the modules should be put in the high-temperature resistant pallet flatly and slightly to avoid the collisions and frictions between the modules. During the baking process, do not overlay the modules directly because it might cause damage to the module's chipset.

6.6.3 Module Baking Conditions

See the baking parameters in Table 6-1.

All Rights reserved, No Spreading abroad without Permission of ZTE

7 Safety Information

The following safety precautions must be observed during all phases of the operation, such as usage, service or repair of any cellular terminal incorporating ZM5330 module. Manufacturers of the cellular terminal should send the following safety information to users, operating personnel and to incorporate these guidelines into all manuals supplied with the product.

The use of this product may be dangerous and has to be avoided in the following areas:

- Where it can interfere with other electronic devices in environments such as hospitals, aircrafts, airports, etc, switch off before boarding an aircraft. Make sure the cellular terminal is switched off in these areas. The operation of wireless appliances in the hospitals, aircrafts and airports are forbidden to prevent interference with communication systems.
- Areas with potentially explosive atmospheres including fuelling areas, below decks on boats, fuel or chemical transfer or storage facilities, areas where the air contains chemicals or particles such as gasoline stations, oil refineries, etc make sure that wireless devices are turned off.

It's the responsibility of users to enforce other country regulations and the specific environment regulations. And our company does not take on any liability for customer failure to comply with these precautions.

All Rights reserved, No Spreading abroad without Permission of ZTE