DJI SRW-60G

User Manual V1.0

2016.06

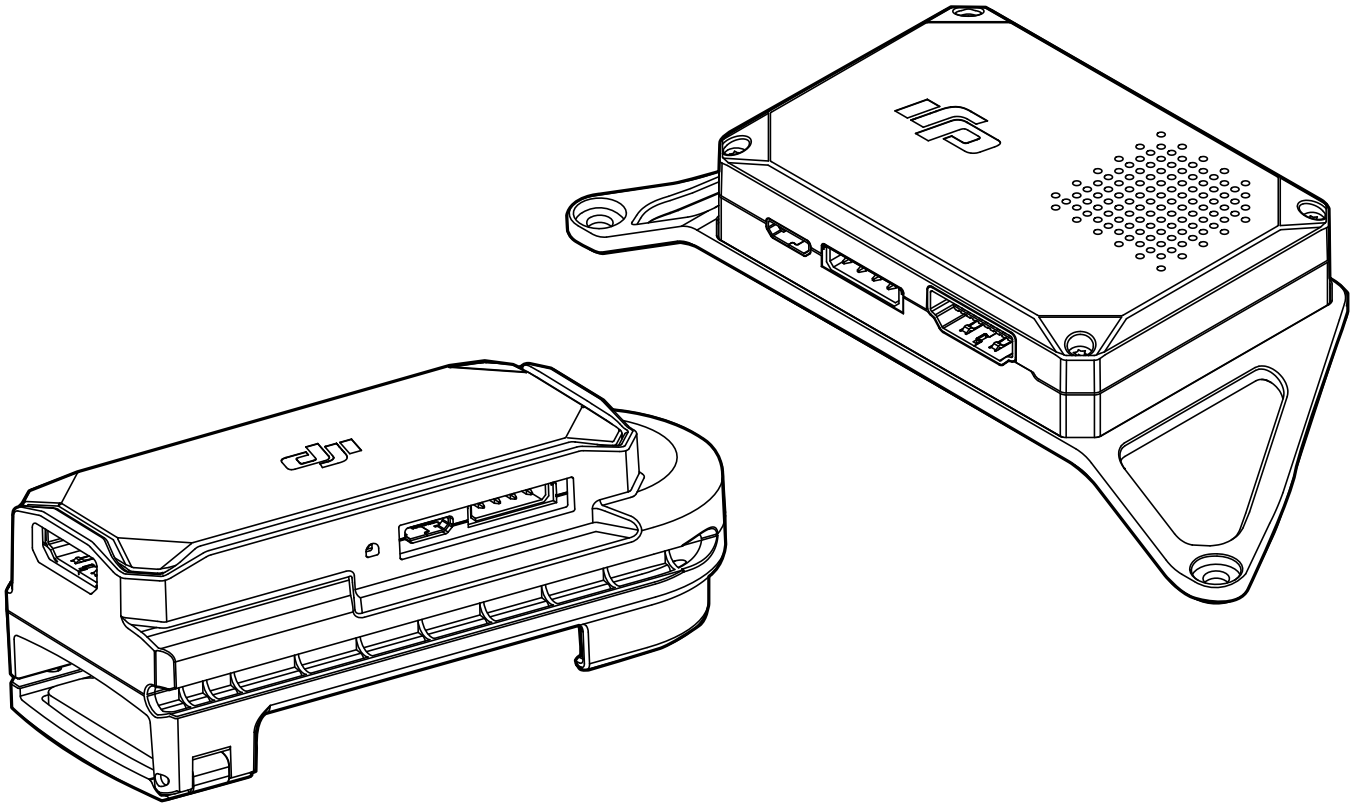

Disclaimer and Warning

Congratulations on purchasing your new DJI™ product. The information in this document affects your safety and your legal rights and responsibilities. Read this entire document carefully to ensure proper configuration before use. Failure to read and follow instructions and warnings in this document may result in serious injury to yourself or others, or damage to your DJI product or damage to other objects in the vicinity. This User Manual and all other collateral documents are subject to change at the sole discretion of DJI. For up-to-date product information, visit http://www.dji.com and click on the product page for this product.

By using this product, you hereby signify that you have read this disclaimer and warning carefully and that you understand and agree to abide by the terms and conditions herein. You agree that you are solely responsible for your own conduct while using this product, and for any consequences thereof. You agree to use this product only for purposes that are proper and in accordance with all applicable laws, rules, and regulations, and all terms, precautions, practices, policies and guidelines DJI has made and may make available.

DJI accepts no liability for damage, injury or any legal responsibility incurred directly or indirectly from the use of this product. The user shall observe safe and lawful practices including, but not limited to, those set forth in this User Manual.

DJI is a trademark of SZ DJI Technology Co., Ltd. (abbreviated as “DJI”) and its affiliated companies. Names of products, brands, etc., appearing in this manual are trademarks or registered trademarks of their respective owner companies.

Using this Manual

Legend	
WARNING	Warning: Failure to properly follow procedures may result in property damage, collateral damage, and serious or superficial injury.
CAUTION	Caution: Failure to properly follow procedures may result in property damage and serious injury.
NOTICE	Notice: Failure to properly follow procedures may result in property damage, a small possiblity of injury, or no possibility of injury.
TIPS	Tips

 © 2016 DJI All Rights Reserved.

Before You Begin

Make sure all the parts listed in the In the Box section below are included in the package. Read this entire User Manual and watch the informational and tutorial videos on the product page of DJI's official website (http://www.dji.com). Read the disclaimers and warnings above to understand your legal rights and responsibilities. If you have any questions or problems during the installation, maintenance or use of this product, please contact DJI or a DJI authorized dealer.

In the Box

Transmitter ×1

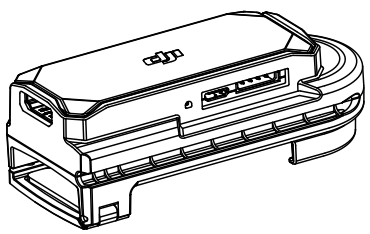

Receiver ×1

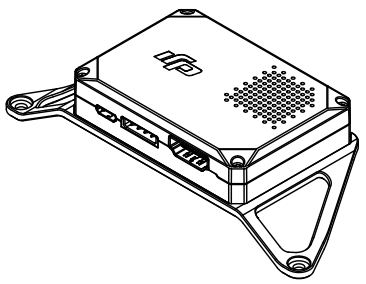

Power Cable for Transmitter ×1

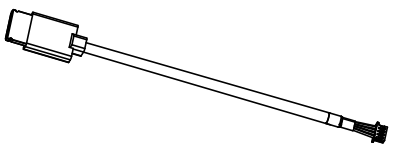

Power Cable for Receiver ×1

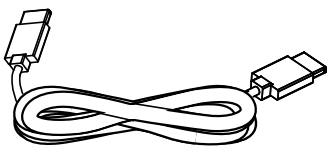

USB Cable ×2

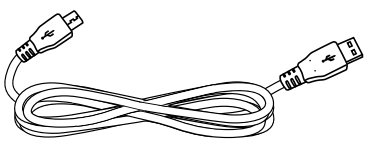

Screw (M3×5.5) ×4

Introduction

The DJI SRW-60G is a short range wireless video link, which can transmit real time HD video or images for up to 10 meters. Containing both a transmitter and a receiver, it can also be used with the Ronin series of handheld gimbals. Convenient video transmission in a meeting room or at home are also a breeze with the SRW-60G.

© 2016 DJI All Rights Reserved.

SRW-60G Diagram

Transmitter

1. HDMI Port
   For connecting to the HDMI output for HDMI transmission.
2. Gimbal Mounting Adapter
   For mounting to a Ronin-MX or Ronin-M. The adapter can be removed when not used with the Ronin-MX or Ronin-M.
3. Cable Slot
   For fastening the cable in position.
4. Link Button
   For linking to the Receiver.
5. Micro USB Port
   For firmware upgrades and power supply.

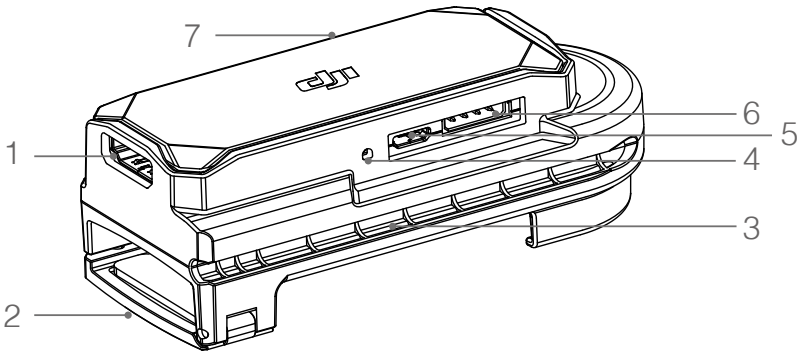

6. Power Port
   For power supply.
7. Status LED
   Indicates the communication status with the Receiver.

Receiver

1. Micro USB Port
   For firmware upgrades and power supply.
2. Power Port
   For power supply.
3. HDMI Port
   For connecting to HDMI input for HDMI transmission.
4. Mounting Adapter
   The adapter can be removed.

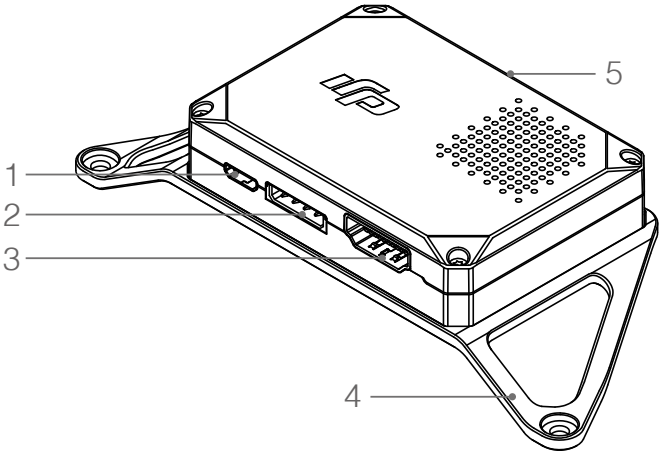

5. Status LED
   Indicates the communication status with the Transmitter.

 © 2016 DJI All Rights Reserved.

Usage

Using the SRW-60G with a Ronin Series Gimbal

1. Loosen the screw of the clamp on the gimbal mounting adapter of the Transmitter. Then attach the Transmitter to the arm of the Ronin-MX or Ronin-M and tighten the screw.

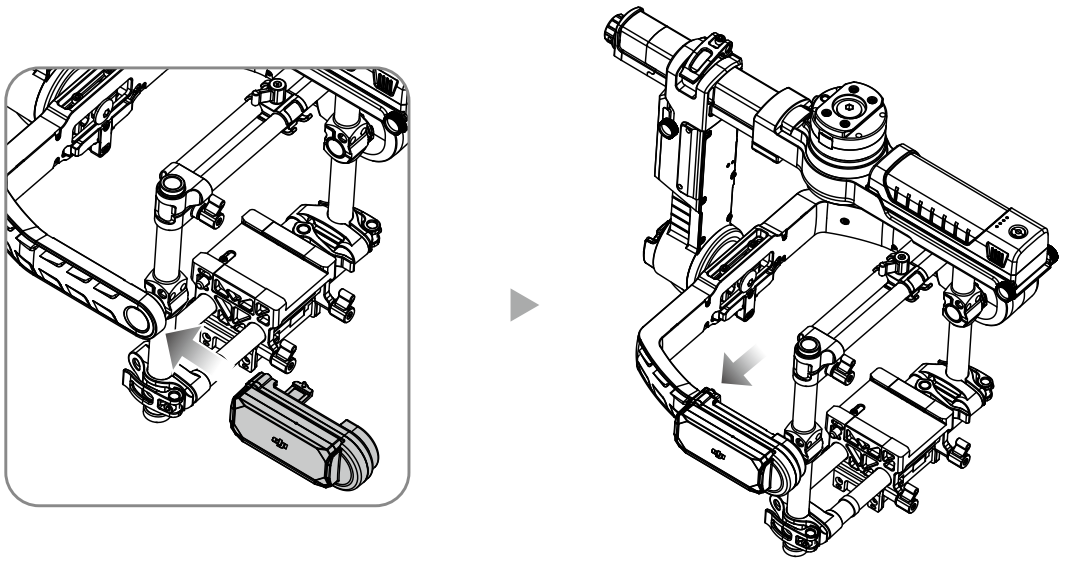

2. Link the HDMI Ports of the Transmitter and the camera by using a soft and flexible HDMI cable (not provided).
3. Connect the Power Port on the Transmitter to the CAN1 Port (or the USB port) of the Ronin-MX by using the provided transmitter power cable.

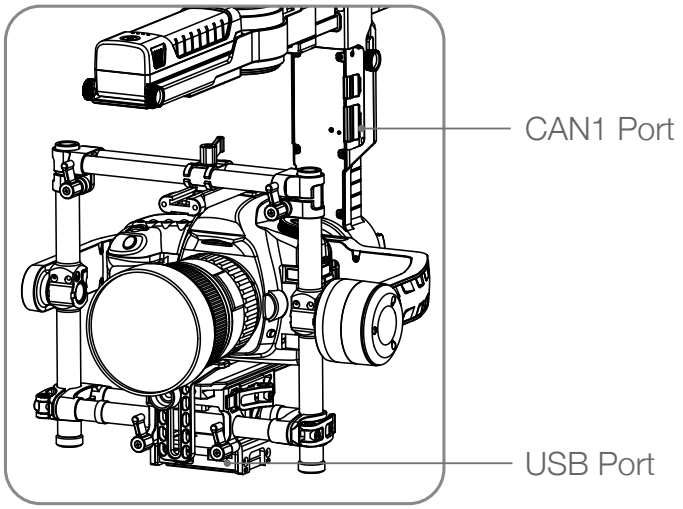

NOTICE • In order to avoid obstructing any gimbal movements, the cables can be attached in the cable slot.

© 2016 DJI All Rights Reserved.

4. If using a Ronin, remove the gimbal mounting adapter and stick the Transmitter onto the Ronin or your camera.

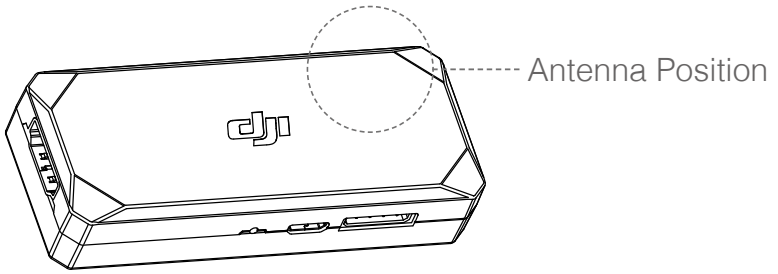

5. Remove the mounting adapter and mount the Receiver in place.

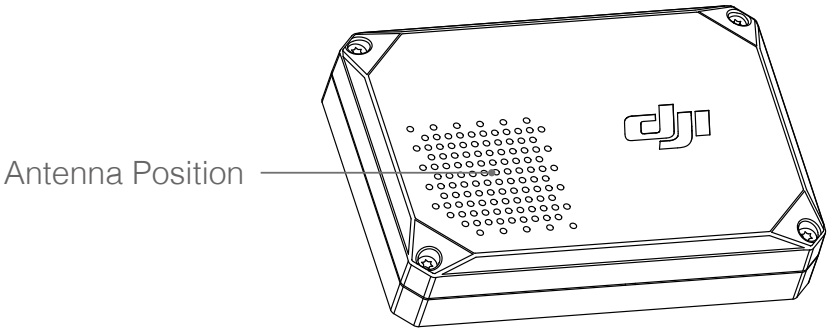

NOTICE • Ensure both the Transmitter and Receiver are not obstructed during use.

Using the SRW-60G in a Meeting Room or at Home

1. Remove the mounting adapters.
2. Connect the HDMI output and input to the Transmitter and Receiver separately.
3. Connect the USB ports on both the Transmitter and Receiver to an external power supply.

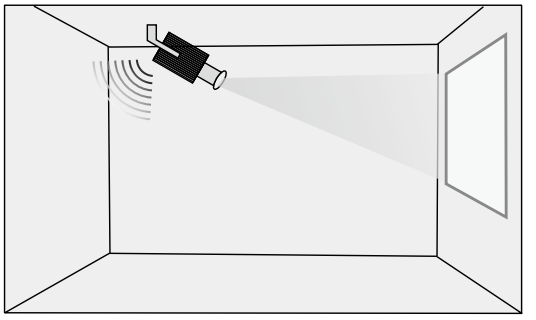

NOTICE • The USB port operation voltage is 5 V (DC).

 © 2016 DJI All Rights Reserved.

Linking

The Transmitter is linked to the Receiver before delivery. Linking is only required when using a new Transmitter or Receiver.
Ensure the Transmitter and Receiver are properly connected to the HDMI device before linking to avoid failure.

How to link

Press the Link button on the Transmitter once. The linking process will complete in approximately 10 seconds.

Status LED Descriptions

Transmitter Status LED		Receiver Status LED		Description
R ……	Blinks red slowly	G ……	Blinks green slowly	The device is not linked and not connected to the HDMI device.
R ……	Blinks red quickly	G ……	Blinks green quickly	Linking but the Transmitter is not connected to the HDMI device.
G ……	Blinks green quickly	G ……	Blinks green quickly	Linking in progress
G —	Solid green	G —	Solid green	Linking successful and working normally

TIPS
- If the linking process does not complete after 15 seconds, check the HDMI connection on both the Transmitter and Receiver.

© 2016 DJI All Rights Reserved.

Specifications

General	
Max Transmission Distance	10 m (unobstructed)
Max Transmitter Power (EIRP)	Transmitter: 17 dBm, Receiver: 30 dBm
Receiver Sensitivity	-72 dBm
Operating Frequency	57 GHz to 64 GHz
Video Output Port	HDMI
Video Resolution	From 480i/576i to 1080p 60Hz
Latency	< 1 ms
Transmitter	
Dimensions	78 mm (L) × 33 mm (W) × 16 mm (H)
Weight	46 g
Antenna Gain	LRP Mode: 5 dBi; MRP Mode: 9 dBi
Operating Voltage (DC)	7.4-12 V (CAN Port) or 5 V (USB Port)
Max Consumption	1.5 W
Operating Temperature	32° to 104° F (0° to 40° C)
Antenna Type	Built-in Antenna
Receiver	
Dimensions	65 mm (L) × 46 mm (W) × 14 mm (H)
Weight	47 g
Antenna Gain	16 dBi
Operating Voltage (DC)	7.4-18 V (CAN Port) or 5 V (USB Port)
Max Consumption	2.5 W
Operating Temperature	32° to 104° F (0° to 40° C)
Antenna Type	Built-in Antenna

 © 2016 DJI All Rights Reserved.

FCC Compliance Notice

This device complies with Part 15 of the FCC Rules. Operation is subject to the following two conditions: (1) This device may not cause harmful interference, and (2) This device must accept any interference received, including interference that may cause undesired operation.
Any changes or modifications not expressly approved by the party responsible for compliance could void the user’s authority to operate the equipment.

This equipment has been tested and found to comply with the limits for a Class B digital device, pursuant to part 15 of the FCC Rules. These limits are designed to provide reasonable protection against harmful interference in a residential installation. This equipment generates, uses and can radiate radio frequency energy and, if not installed and used in accordance with the instructions, may cause harmful interference to radio communications. However, there is no guarantee that interference will not occur in a particular installation. If this equipment does cause harmful interference to radio or television reception, which can be determined by turning the equipment off and on, the user is encouraged to try to correct the interference by one or more of the following measures:

—Reorient or relocate the receiving antenna.
—Increase the separation between the equipment and receiver.
—Connect the equipment into an outlet on a circuit different from that to which the receiver is connected.
—Consult the dealer or an experienced radio/TV technician for help.

RF Exposure Information

This equipment complies with FCC radiation exposure limits set forth for an uncontrolled environment. In order to avoid the possibility of exceeding the FCC radio frequency exposure limits, human proximity to the antenna shall not be less than 20cm during normal operation.

IC RSS Warning

This device complies with Industry Canada licence-exempt RSS standard (s). Operation is subject to the following two conditions: (1) this device may not cause interference, and (2) this device must accept any interference,including interference that may cause undesired operation of the device.
Le présent appareil est conforme aux CNR d'Industrie Canada applicables aux appareils radio exempts de licence.
L'exploitation est autorisée aux deux conditions suivantes:
(1) l'appareil ne doit pas produire de brouillage, et
(2) l'utilisateur de l'appareil doit accepter tout brouillage radioélectrique subi, même si le brouillage est susceptible d'en compromettre le fonctionnement.

© 2016 DJI All Rights Reserved.

IC Radiation Exposure Statement:
This equipment complies with IC RF radiation exposure limits set forth for an uncontrolled environment.
This transmitter must not be co-located or operating in conjunction with any other antenna or transmitter.
This equipment should be installed and operated with minimum distance 20cm between the radiator& your body.
Any Changes or modifications not expressly approved by the party responsible for compliance could void the user’s authority to operate the equipment.

KCC Warning Message

“해당무선설비는 운용 중 전파혼신 가능성이 있으므로 인명안전과 관련된 서비스는 할 수 없습니다 .”
“해당 무선설비는 운용 중 전파혼신 가능성이 있음”

EU Compliance Statement

SZ DJI TECHNOLOGY CO., LTD. hereby declares that this device is in compliance with the essential requirements and other relevant provisions of the R&TTE Directive.
A copy of the EU Declaration of Conformity is available online at www.dji.com/euro-compliance

CE 1313

EU contact address: DJI GmbH, Industrie Strasse. 12, 97618, Niederlauer, Germany

 © 2016 DJI All Rights Reserved.

DJI Support

http://www.dji.com/support

The content is subject to change.

Download the latest version from
http://www.dji.com/product/ronin-mx

If you have any questions about this document, please contact DJI by sending a message to **DocSupport@dji.com**.

RONIN™ is a trademark of DJI.
Copyright © 2016 DJI All Rights Reserved.

Printed in China.

© 2016 DJI All Rights Reserved.